BEFORE THE PUBLIC UTILITIES COMMISSION
OF THE STATE OF HAWAII

In the Matter of the Application of	)	
	)	
MAUI ELECTRIC COMPANY, LIMITED	)	Docket No. 2006-0387
	)	
For Approval of Rate Increases and Revised Rate Schedule and Rules	)	
	)	

FILED
OCT 30 2007
Public Utilities Commission

MECO
2007 TEST YEAR

MECO Voluminous Responses to CONSUMER ADVOCATE Information Requests

Book 7 of 12

October 30, 2007

CA-IR-81

Ref: MECO-WP-505 – Overhaul Normalization Calculations.

Please provide complete copies of reports, analyses, quotations, maintenance directives and other documents reviewed and/or relied upon by MECO to develop the Maintenance Frequency/Overhaul Interval values and the Historical Overhaul Cost input values for each unit, to the extent not previously provided in response to Consumer Advocate information requests. If this information is presented within the Company's CA-IR-1 or CA-IR-2 responses, please provide pinpoint citations into the support for each of the values used for each unit outage.

MECO Response:

The frequency and overhaul interval values were developed from the normalized running hours per unit based on simulation runs done in MECO 404 and recommended overhaul intervals from the engine manufacturer. The normalized engine running hours for 2007 is provided in Attachment 1. The manufacturer's maintenance schedules and overhaul intervals are provided in Attachment 2.

As mentioned in some of the maintenance schedules the maintenance frequencies may change depending on how the units operate and site conditions.

Overhaul costs were derived from recorded historical non-labor overhaul costs. The basis of these overhaul costs are provided in Attachment 3. Expenses within the boxes were used to normalize overhaul costs.

645E4
ENGINE MAINTENANCE MANUAL
(TURBOCHARGED)

2nd Edition
August, 1967

SERVICE DEPARTMENT

Electro-Motive Division
La Grange, Illinois

GM
MARK OF EXCELLENCE

Litho in U.S.A.
13423

M.I. 1723
*Rev. C

ELECTRO-MOTIVE DIVISION • GENERAL MOTORS CORPORATION
SERVICE DEPARTMENT

MAINTENANCE INSTRUCTION

SCHEDULED MAINTENANCE PROGRAM MP-TYPE POWER GENERATING UNITS

INTRODUCTION

This Maintenance Instruction provides recommendations which should ensure satisfactory operation and maintenance cost where average load factors and average climatic conditions are encountered. It is intended to serve as a guide to establish maintenance schedules to meet requirements of individual operations and planned economic life of the MP26, MP27, MP36, MP45, and EM units with associated switchgear.

These recommendations are based on the following conditions:

1. Fuel oil used will meet the specifications of Maintenance Instruction 1750.
2. Lubricating oil used will meet the specifications of Maintenance Instructions 1762 and 1764 and will be changed at the intervals specified in this M.I.
3. Engine coolant used will meet the specifications in Maintenance Instruction 1748.
4. Lubricating oil filters will be of a quality equal to original equipment and will be changed at the intervals specified in this M.I.
5. Operating load limitations will be adhered to.
6. Torquing procedures contained in this M.I. will be followed for new engines and newly installed replacement assemblies.

This Maintenance Instruction is divided into three sections. The first section is maintenance performed before and after each start, the second section is performed on a "calendar period" basis, and the third section is performed on a "running time" basis. Because operating requirements for this equipment can vary from standby, to periodic, to continuous usage, the maintenance procedures must be modified to suit individual requirements.

REFERENCES

Abbreviations are used in this instruction to reference publications that contain information related to maintenance. The following examples are provided to aid in understanding the abbreviations used.

EMM	means Engine Maintenance Manual
OM	means Operating Manual
M.I.	means Maintenance Instruction

*This bulletin is revised and supersedes previous issues of this number.

March 1977

M.I. 1723

BEFORE EACH START

(ATTENDED UNITS)

LUBE OIL SYSTEM	
Check for lube oil in pan and strainer housing. Add oil if required.	EMM
COOLING SYSTEM	
Check coolant level and add coolant if required.	OM
FUEL SYSTEM	
Check fuel supply and open fuel supply valves.	OM
Prime system.	OM
ENGINE	
Open cylinder test valves and manually bar over engine one complete revolution, check for liquid ejected from valves, and close test valves.	If fluid discharge is observed from any cylinder, find the cause and make necessary repairs prior to starting the engine.
Prelube engine if unit has been shut down for over 48 hours.	EMM
GOVERNOR	
Check lube oil level.	EMM

IMMEDIATELY AFTER EACH START

(ATTENDED UNITS)

INSPECT FOR LEAKS

Cooling system
Fuel system
Lube system
Exhaust system

LUBE OIL SYSTEM	
Check lube oil level in pan with engine at idle.	EMM
Check lube oil pressure at engine.	OM

M.I. 1723

IMMEDIATELY AFTER EACH START (CONT'D)

(ATTENDED UNITS)

ENGINE

Check cylinder test valves for leakage. Tighten if required.	EMM
Check handhole covers for leakage. Tighten if required.	EMM
Check air box drains for proper operation and clean, if necessary.	EMM. If drains are kept closed, drain every 4 hours.

PERFORM THE FOLLOWING ITEMS ON CALENDAR TIME BASIS

DAILY

(ATTENDED UNITS)

INSPECT FOR LEAKS

Cooling system
Fuel system
Lube oil system
Exhaust system

LUBE OIL SYSTEM

Check lube oil level in pan.	EMM

COOLING SYSTEM

Check coolant level.	OM

FUEL SYSTEM

Check fuel supply.

GOVERNOR

Check oil level and add oil if required.	EMM

M.I. 1723

WEEKLY

(UNATTENDED UNITS)

ENGINE SHUT DOWN

LUBE OIL SYSTEM

Check for lube oil in pan and strainer housing. Add oil if required.	EMM

COOLING SYSTEM

Check coolant level and add coolant if required.	OM

FUEL SYSTEM

Check fuel supply.	OM

GOVERNOR

Check lube oil level.	EMM

ENGINE RUNNING

INSPECT FOR LEAKS

Cooling system
Fuel system
Lube system
Exhaust system

LUBE OIL SYSTEM

Check lube oil level in pan with engine at idle.	EMM
Check lube oil pressure at engine.	OM

WEEKLY (CONT'D)

ENGINE RUNNING

ENGINE

Check cylinder test valves for leakage. Tighten if required.	EMM
Check handhole covers for leakage. Tighten if required.	EMM
Check air box drains for proper operation and clean, if necessary.	EMM. If drains are kept closed, drain every 4 hours.

EVERY MONTH

LUBE OIL SYSTEM

Take sample for analysis.	The services of a competent laboratory should be used to monitor the suitability of the oil for continued use according to M.I. 1762.

LUBE OIL CIRCULATING PUMP AND MOTOR (Where Used)

Check for proper operation.	OM

IMMERSION HEATER (Where Used)

Check for proper operation.	OM

BATTERIES

Check electrolyte.	Add if necessary.
Check cell voltage.	
Check specific gravity.	
Wash out battery boxes.	

BATTERY CHARGING EQUIPMENT

Check operation.	OM.

COOLING SYSTEM

Lubricate shutter linkage and motor.	Light motor oil.

MP UNIT

Give unit complete operating sequence check.	Cover operating modes not normally used.

M.I. 1723

EVERY TWO MONTHS

AUXILIARY TURBOCHARGER FILTER
(Where Used)

Replace elements.

AUXILIARY TURBOCHARGER FILTER
(MP-36, Where Used)

Clean metal filter element. — *Use cleaning fixture 8319754 for disc-type filter. Use cleaning fixture 8320233 for pleated screen filter. 567E4 EMM.*

IMMERSION HEATER
(MP-36, Where Used)

Clean water pump strainer.

EVERY THREE MONTHS

FUEL TANK

Drain condensate. — Frequency will depend upon weather conditions.

MP UNIT

Lubricate door hinges and locks.

Inspect door seals. — Replace where required.

MC UNIT OR OUTDOOR
SWITCHGEAR STATION

Lubricate ventilating fan motor bearing. — Light motor oil.

COOLING SYSTEM

Lubricate cooling fan bearings unless the 700 hour lubrication occurred first. — Lubricate to purge point with ball bearing grease. Do not over lubricate.

EVERY YEAR

LUBE OIL CIRCULATING PUMP
AND MOTOR (Where Used)

Inspect and clean with dry air.

Replace brushes. — If equipped with DC motor.

Remove and clean check valve.

M.I. 1723

EVERY YEAR (CONT'D)

MP UNIT	
Check operation of protective devices.	Annunciator, protective relays.
ELECTRICAL CABINETS AND COMPARTMENTS	
Visually inspect and clean:	
Voltage regulator.	M.I. 4523 or appropriate voltage regulator manual.
All relays, contactors, and circuit breakers.	OM.
Remove circuit breakers from compartments.	
Clean insulators.	
Lubricate linkage bearings.	
Check operation.	
COOLING SYSTEM	
Check operation and setting of engine water temperature controls.	
Check torque on flexible pipe coupling bolts.	
INERTIAL FILTERS	
Take manometer readings across inertial filters. Engine at full speed, no load.	Use periodic manometer readings to evaluate the rate at which filter compartment depression increases. Schedule periodic cleaning accordingly.

EVERY TWO YEARS

LUBE OIL FILTERS	
Change filter elements.	EMM. Unless the 1400 hour filter change has occurred first.
Clean lube oil strainer.	EMM. Fill strainer housing with oil, and perform engine prelube procedure before starting engine.
TURBOCHARGER OIL FILTER	
Replace filter elements.	EMM. Unless 1400 hour filter change has occurred first.

M.I. 1723

EVERY TWO YEARS (CONT'D)

SOAK BACK OIL FILTER
(Where Used)

Replace filter element.	EMM. Unless 1400 hour filter change has occurred first.

FUEL FILTERS

Change engine mounted filter elements.	EMM. Unless 2000 hour filter change has occurred first.
Clean or replace suction strainer element.	EMM

ENGINE PROTECTOR

Replace.	M.I. 259. Qualify on test stand after renewing springs, "O" rings, and diaphragms.

LUBE OIL CIRCULATING PUMP
AND MOTOR (Where Used)

Unit Exchange.

EVERY THREE YEARS

COOLING SYSTEM THERMOSTATIC
VALVE

Replace "O" rings and thermostatic elements.	EMM, M.I. 581

EVERY FOUR YEARS

COOLING SYSTEM PRESSURE CAP

Replace.	Unless 16,000 hour replacement has occurred first.

EVERY SIX YEARS

ENGINE

Replace top deck cover seals and check latches.	EMM. Unless 8000 hour replacement has occurred first.
Replace cylinder head grommets, inlet and outlet seals, and lower liner seals.	EMM. Unless 12,000 hour cylinder assembly replacement has occurred first.

MAIN GENERATOR

Remove bearing cover and inspect for grease contamination, excessive wear, and overheating., Apply new grease.	Unless 48,000 hour lubrication has occurred first. M.I. 3327 for EMD generator. If generator is other than EMD, refer to manufacturer's manual.

FUEL TRANSFER PUMPS AND MOTORS

Recondition

M.I. 1723

PERFORM THE FOLLOWING ITEMS ON RUNNING TIME BASIS

AFTER THE FIRST 350 HOURS OF OPERATION

ENGINE NUT AND BOLT TIGHTNESS CHECK	Torque to values specified in EMM
Cylinder head crab nuts.	
Exhaust manifold flange bolts.	
Cylinder liner water inlet line nuts and bolts.	
Head frame to crankcase bolts.	
Turbocharger to air duct bolts, aftercooler to air duct bolts, and air duct to crankcase bolts.	

EVERY 350 HOURS

FUEL FILTER	
Check fuel pressure gauge with engine at rated RPM.	On units where gauge is connected to filter input side, change filter elements if pressure is greater than 50 psi. On units where gauge is connected on filter output side, change filter elements if pressure is less than 12 psi.
LUBE OIL FILTER	
Check lube oil pressure at filter cover with engine at rated RPM.	EMM. Change filter elements if input pressure is greater than 25 psi. If filter requires change, perform engine prelube procedure before starting engine.
WATER PUMPS (MP26, MP27, MP36 Units)	
Fill oil cups. (Where Used.)	
COOLING SYSTEM	
Inspect cooling fan belts for signs of slipping or chafing.	

EVERY 700 HOURS

ENGINE PROTECTOR	
Check operation.	EMM, M.I. 259
SOAK BACK PUMP AND MOTOR	
Check operation.	With the engine shut down and soak back pump motor running, remove left rear handhole cover and check oil flow through gear train. Observe camshaft bearings. If lube oil flows from camshaft bearings with soak back pump running and engine shut down, inspect turbo filter outlet check valve for proper operation.

M.I. 1723

EVERY 700 HOURS (CONT'D)

ENGINE AIR FILTER -- CYCOIL TYPE (Where Used)	
Check oil level.	EMM, M.I. 442
ENGINE AIR FILTER -- PANEL TYPE OIL BATH (Where Used)	
Check oil level.	EMM, M.I. 440
ENGINE AIR FILTER -- PAPER OR FIBERGLASS TYPE (Where Used)	
Check indicator. If tripped, take manometer readings and replace elements, if necessary.	OM
HEAT EXCHANGER	
Inspect corrosion zincs.	EMM
TURBOCHARGER OIL FILTER (MP26, MP27, MP36 Units, Where Used)	
Clean or replace.	Metal element, if used, should be cleaned using fixture 8315844. Paper elements, if used, should be replaced.
COOLING SYSTEM	
Check cooling fan belt tension.	
Lubricate cooling fan bearings unless the three month lubrication occurred first.	
FUEL TRANSFER SYSTEM	
Change filter elements and clean suction strainers.	

EVERY 1400 HOURS

LUBE OIL FILTERS	
Change filter elements.	
Clean lube oil strainers.	EMM. Fill strainer housing with oil, and perform engine prelube procedure before starting engine.
TURBOCHARGER OIL FILTER	
Replace filter element.	Filter elements must be of a quality equal to original equipment. The interval of change for turbocharger and soak back filter elements is influenced by load factor, kind of lubricating oil, type of operation, climatic conditions, and maintenance of main lube oil filters.

EVERY 1400 HOURS (CONT'D)

SOAK BACK OIL FILTER (Where Used)	
Replace filter element.	Same as above.
AUXILIARY TURBOCHARGER FILTER (Where Used)	
Replace elements.	OM
PROTECTIVE DEVICES	
Check operation.	EMM
FUEL TRANSFER SYSTEM	
Check operation of controls, switches, and alarms.	

EVERY 2000 HOURS

FUEL FILTERS	
Clean or replace suction strainer element.	
Change engine mounted filter elements.	EMM. Use only elements equal to original equipment.
COOLING SYSTEM	
Check inhibitor concentration.	M.I. 1748
ENGINE AIR FILTERS -- CYCOIL TYPE	
Change oil. Drain and fill only.	EMM, M.I. 442
ENGINE AIR FILTER -- PANEL TYPE OIL BATH	
Change oil. Drain and fill only.	EMM, M.I. 440
ENGINE AIR FILTERS -- PAPER TYPE	
Take manometer readings. Replace elements if necessary, or whenever the annunciator light indicates plugged filters.	

M.I. 1723

EVERY 2000 HOURS (CONT'D)

ENGINE AIR FILTERS -- FIBERGLASS TYPE

Replace elements.	

ENGINE

Inspect air box.	EMM
Inspect crankcase.	EMM
Inspect crankshaft and connecting rods.	EMM
Inspect pistons and piston rings.	EMM
Inspect cylinder liners.	EMM
Inspect cylinder head mechanism with engine idling and at operating temperature.	EMM
Inspect engine fuel lines and connections for leaks.	EMM
Inspect engine water system for leaks.	EMM

EVERY 4000 HOURS

EXHAUST SYSTEM

Remove manifold screen and trap. Check for cracks and clean.	EMM

EDUCTOR TUBE (Exhaust Stack Mounted)

Inspect for carbon deposits and clean, if necessary.	EMM

OIL SYSTEM

Change engine oil.	EMM. Evaluation of engine and oil condition should dictate the frequency of this item. Type of service, type of oil, quality of filter elements, and condition of engine will influence the frequency of oil change.
Clean oil pan.	
Clean filter housing.	
Clean oil suctions screens.	
Clean scavenging oil screens.	EMM. Fill strainer housing with oil, and perform engine prelube procedure before starting engine.

EVERY 4000 HOURS (CONT'D)

ENGINE

Check pressure drop across aftercoolers; oil bath filter equipped engines only.	EMM. Clean air passages if necessary.
Check exhaust manifold base flange bolts for *proper tightness.*	EMM

MAIN GENERATOR (Where Used)

Inspect slip rings and brushes, and replace brushes if required.	M.I. 3327 for EMD generator. If generator is other then EMD, refer to manufacturer's manual.
Reverse polarity of slip rings.	

GOVERNOR

Change oil.	EMM
Lubricate linkage moving parts.	EMM
Lubricate governor synchronizing motor, motor bearings. (Where Used.)	EMM

EVERY 8000 HOURS

ENGINE NUT AND BOLT RETORQUING

Cylinder head crab nuts.	Loosen, and then torque to values specified in EMM.
Main lube oil and piston cooling oil pump shaft nut.	EMM
Head frame to crankcase bolts.	EMM
Turbocharger to air duct bolts, aftercooler to air duct bolts, and air duct to crankcase bolts.	EMM

M.I. 1723

EVERY 8000 HOURS (CONT'D)

ENGINE

Replace top deck cover seals and check latches.	EMM
Qualify injectors.	EMM
Check injector timing and injector rack length.	EMM
Check engine speed.	EMM
Check overspeed trip.	EMM
Remove and clean oil separator element.	EMM
Check pressure drop across aftercooler.	EMM. Clean air passages if necessary.
Inspect viscous damper while engine is being barred over. (Where Used.)	EMM
Inspect vibration damper or harmonic balancer. (Where Used.)	EMM
Remove, clean, and inspect; replace if necessary.	EMM
Soak back check valve in the turbo filter inlet.	
Soak back oil pressure relief valve in the soak back filter head.	
Soak back filter bypass valve in the soak back filter head.	
Turbo oil filter check valve in the turbo filter head.	

EXHAUST SYSTEM

Inspect manifold connectors for liner cracks and replace if necessary.	EMM

MAIN GENERATOR

Visually inspect and clean.	M.I. 3327
Replace slip ring brushes.	

EXCITER

Clean and visually inspect.	M.I. 3706
Inspect and replace brushes when required. Replace brushes in sets only.	

STARTING MOTORS

Blow out with dry air.

M.I. 1723

EVERY 8000 HOURS (CONT'D)

ENGINE AIR FILTER -- CYCOIL TYPE	
Change oil and clean sump.	EMM, M.I. 442
Check operation of variflow valves.	
Check condition of hoses.	
ENGINE AIR FILTERS -- PANEL TYPE OIL BATH	
Change oil. Clean sump and filter media.	M.I. 440
SOAK BACK PUMP MOTOR (Where Used)	
Inspect and clean with dry air.	OM
Replace brushes.	OM
COOLING SYSTEM	
Inspect and perform pressure test.	
Replace pressure cap if defective.	
LUBE OIL FILTER	
Remove oil filter bypass valve; clean, inspect, and test.	M.I. 926

EVERY 12,000 HOURS

ENGINE	
Replace cylinder assemblies.	EMM
Replace injectors.	EMM
Inspect and qualify connecting rod bearings.	EMM
Inspect and qualify piston cooling tubes.	EMM
Check rocker arms, rocker arm bushings, and cam followers.	EMM
Check lash adjusters.	EMM
Check exhaust valve timing.	EMM
Replace water pump seals and all worn parts.	EMM
Perform engine prelube procedure before starting engine.	EMM

M.I. 1723

EVERY 16,000 HOURS

STARTING MOTORS

Disassemble, clean, and lubricate.	EMM
Inspect brushes and replace if necessary.	EMM

FUEL PUMP

Replace coupling spider.

SOAK BACK PUMP (Where Used)

Replace coupling spider.

FREQUENCY GENERATOR (Where Used)

Replace coupling spider.

FUEL TRANSFER PUMP AND MOTOR

Replace coupling spider.

COOLING SYSTEM

Replace pressure cap.	OM
Inspect filler neck for damage. Replace if damaged.	OM
Take cooling water sample for lab analysis and corrosion test.	

TURBOCHARGER (Manufactured Prior To 71D Serial Number)

Unit exchange.	EMM

EVERY 24,000 HOURS

ENGINE

Install new thrust collars.	EMM
Install new lower main bearings.	EMM

COOLING SYSTEM

Replace flexible coupling seals.

LUBE OIL COOLER

Inspect, clean, and test.	M.I. 927

HEAT EXCHANGER

Inspect, clean, and test.	EMM

COOLING FAN

Replace drive bearings.

EVERY 32,000 HOURS

TURBOCHARGER (Manufactured With 71D Or Later Serial Number)

Unit exchange.	EMM. Average individual operating conditions will determine frequency.

GOVERNOR

Replace.	Replacement should be EMD Unit Exchange or equivalent.

GOVERNOR BOOSTER SERVO (Where Used)

Disassemble, clean, inspect, and replace O-ring seals.	EMM

FUEL PUMP

Recondition.	M.I. 4110

SOAK BACK PUMP AND MOTOR (Where Used)

Recondition.	M.I. 4101, 4110

EVERY 48,000 HOURS

ENGINE

Replace vibration damper or harmonic balancer. (Where Used.)	EMM. Replace with viscous damper.
Replace oil pumps.	EMM
Remove oil pressure relief valve; clean, inspect, and test.	EMM
Replace lower liner inserts.	EMM
Inspect injector control linkage. Replace links, seals, and bearings, if required.	

MAIN GENERATOR

Remove bearing cover and inspect for grease contamination, excessive wear and overheating. Apply new grease.	M.I. 3327 for EMD generator. If generator is other than EMD, refer to manufacturer's manual.

EVERY 72,000 HOURS

ENGINE

Replace crankshaft viscous damper. (Where Used.)	EMM

EVERY 96,000 HOURS

ENGINE

Unit exchange.

GENERATOR

Unit exchange.

Litho in U.S.A.

LSV Diesel and Dual-Fuel Engines

Operation and Maintenance Manual

COOPER INDUSTRIES

COOPER-BESSEMER

SECTION 14

MAINTENANCE

The following information regarding service and maintenance is in addition to that given in the various sections of this manual.

Turning Gear and/or Barring Over Jack

Turning Gear (100 PSI air):

A gear is provided at the forward end of the engine for turning and spotting the moving parts of the engine while performing service work. A reversible air motor is used to turn the crankshaft through a worm and gear.

To use the turning gear, remove the inspection plate over the worm. Remove the cotter pins and the worm retainer key being *careful not to drop these parts into the gear* case. Slide the worm over against the gear and slowly rotate the air motor to completely mesh the worm and gear. Secure the worm in this position with the retainer key and cotter pins. The engine can now be turned by directing air pressure to the air motor.

The dead center and degree marks stamped on the face of the gear can be lined with the pointer mounted on the center line of both banks of cylinders. In this manner, the angular position of the crankshaft can be spotted for checking the timing of any cylinder.

Lubricate the worm manually with 600 W grease, or equivalent, whenever the turning gear is used.

CAUTION! BEFORE STARTING THE ENGINE, REMOVE COTTER PINS AND RETAINER KEY FROM THE WORM SHAFT. ROTATE THE WORM OUT OF ENGAGEMENT WITH THE GEAR AND LOCK SECURELY WITH RETAINER KEY AND COTTER PINS. PUT INSPECTION COVER IN PLACE AND SECURE WITH CAPSCREWS.

Barring Over Jack (250 PSI air):

The barring over device consists of two air-operated jacks mounted vertically, one on each side of the engine, in line with the flywheel or jacking wheel. To rotate the engine crankshaft, tip the desired jack into position so that the barring arm will engage the notches in the flywheel or jacking wheel. Apply air pressure to the jack in use and the barring arm will move upward and turn the wheel in the desired direction. Release the air pressure to return the barring arm to starting position. The jacks are secured in position *away from the wheel when not in use.*

Compression Pressure Indicator

When the engine has been running long enough to be up to operating temperature, the pressure indicator may be used to obtain a cylinder compression reading.

To take a compression reading, attach the pressure indicator to the cylinder to be checked. *Refer to General Data for the correct compression* pressure as related to air inlet manifold pressure. It is very important to have the correct air inlet manifold pressure because it determines compression pressure from no load to full load. With the engine running at the desired manifold pressure, shut off fuel to the cylinder being checked. Before closing the gas isolating valve on a dual-fuel mark its position; it must be opened to its original factory setting after the compression test is completed!

Load Balance

See Section 3.

Shaft Alignment

See Section 1A.

Maintenance

The following program is offered as a guide only to proper operation and maintenance as it is difficult to set a definite program for all cases because installation and operating conditions will vary considerably. Experience in operation will establish the proper schedule to be followed.

In every case it is urged that the operator keep a running account or daily log recording all observations of temperatures, pressures and fuel, lubricating oil and replacements used. Our Field Service Department will be glad to assist in planning a log sheet and maintenance program.

MAINTENANCE

Daily Program:

1. Observe
   a. Water temperatures
   b. Exhaust temperatures
   c. Load condition
   d. Lubricating oil temperatures and pressures
   e. Fuel oil pressure and fuel gas pressure
   f. Starting air and control air pressure
   g. Air inlet manifold temperature and pressure
2. Check
   a. Engine oil level
   b. Governor oil level
   c. Water level in standpipe
   d. Fuel oil supply
3. Lubricate
   a. All linkage
   b. Exhaust valves every 48 hours or as necessary to prevent sticking. Do not over lubricate! Use Texaco Stazon "H" or equivalent.
4. Turn handles on lubricating and fuel oil strainers (if cleanable type)
5. Drain moisture from air tanks

Monthly or every 600 Hours:

1. Clean
   a. Air filters (as indicated necessary by amount of dirt in air)
   b. Lubricating oil strainer
   c. Lubricating oil filter (as indicated necessary by amount of dirt in air)
2. Check
   a. Overspeed shutdown device
   b. Condition of zinc plates (if any) in heat exchanger and oil cooler
   c. Valve tappet clearance
   d. Fuel injection nozzle opening pressure and spray pattern
   e. Crankcase
      1) Inspect bottoms of piston skirts for sludge or evidence of blowby
      2) Feel cylinder walls for scoring
      3) Check all bolts for tightness
3. Remove cover plates and inspect condition of cams and rollers.
4. Obtain complete analysis of the lubricating oil and change if condition is below requirements.

Semi-Annual or every 3600 Hours:

1. Adjust chain tightness
2. Check main valve and fuel injection timing
3. Measure and record compression pressures
4. Inspect high pressure fuel regulator guide for erosion.

Annual or Every 8000 Hours:

1. Main Valves - check condition of main valves on one or two cylinders. If condition warrants, check remainder of valves and recondition if necessary.
2. Crankshaft - check shaft alignment by crankshaft web deflection readings.
3. Turbocharger - clean and inspect per manual instructions.
4. Turbocoolers or Aftercoolers - clean and inspect per manual instructions.
5. Breathers - clean all cylinder head and crankcase breathers. Slosh element in fuel oil or kerosene. Blow dry before assembly.
6. Inspect main and connecting rod bearings. Remove and inspect the shells and shims of the second main bearing from the flywheel end after initial 8000 hours of operation. This should be done even though interim investigations listed below indicated no cause for concern. When the shells are removed from any bearing it is recommended that the journals (or crankpin) be examined for cracks by the "dye-check" method. The areas around the oil holes and the fillets at the ends of the journal should be examined very closely. Consult your Cooper-Bessemer representative if you have any doubts regarding bearing conditions. Interim inspections as noted below should be made to detect possible failures and to avoid non-scheduled maintenance and downtime.
   a. Examination of the lube oil strainers and filters for metal particles. If found, proceed as per step B below.
   b. Laboratory analysis of used lube oil samples to determine metallic content, quantitative and qualitative.
   c. Periodic examination of inner side of crankcase doors and of interior ledges where oil thrown off by the cranks will deposit metal particles, if connecting

rod bearings are deteriorating.

1) Examination should also include inspection of the surfaces of the main bearing area, at the cap sides and below the bearing saddle.
2) Metal particles migrating from a main bearing may also wash down the wall under the saddle. If shell conditions are very bad the flakes and granules will be found at the base of the wall.
3) When oil is changed the entire crankcase floor should be examined for metal particles.
4) When sump is full and a check below the saddles is desired, a rod fitted with a soft cloth or small swab can be used to examine the deep areas.

d. Departures from normal good crankshaft alignment within the engine, which is really a check of bearing attitudes and relative elevations, is another indication of probable bearing trouble. But, bearing surfaces may be well on the way toward critical condition without a noticeable change in alignment.

e. Sometimes, in the absence of metal particle findings, the "jack" method of checking bearing clearances will disclose bad bearing conditions. Simple removal of shims to reduce clearance is not always the correction. Examination of both upper and lower shells and of the shims, plus measuring the "side" fit of the cap in it's saddle should be included. The base may have spread because of poor foundation support or loose tie-rods. Thus, the "oil" clearance horizontally will be wide and the vertical clearance will be lessened, perhaps to or near interference.

SECTION 6

PREVENTATIVE MAINTENANCE

General

To insure that equipment is ready for operation at all times, it should be inspected systematically before, during, and after operation, so defects may be discovered and corrected before they result in serious damage or failure. Defects discovered during operation should be noted for future correction and made as soon as operation has ceased. Stop operation immediately if deficiency is noticed which would damage the turbocharger if operation were continued.

Lubrication System

Inspect the oil system for leaks and low oil pressure. Oil pressure should be 5 psi minimum within 10 seconds after turbocharger is started and 35 psi during normal engine operation. Correct any leaks found. If oil pressure is low, stop engine and determine cause.

Check oil temperature. Oil temperature should be between 140°F to 155°F with engine lubrication and 120°F to 155°F with separate lubrication system. If inlet temperature is high, stop engine and determine cause.

Cooling System

Inspect water inlet and outlet lines for leaks. Repair any leaks found.

Vibration

Check the turbocharger for vibration. If any noticeable vibration develops, shut the engine down and determine cause. Vibration can be caused by the following:

1. Damage to any part of rotor such as foreign objects passing through the turbine causing damage to blades, unbalance, and vibration.
2. Excessive bearing wear.
3. Uneven dirt or scale accumulation on blower impeller and turbine blades.

Turbocharger Bearings, Diffuser, Rotor, Nozzle Ring, Baffles and Casings

NOTE: WHERE POSSIBLE, CLEANING THE TURBOCHARGER SHOULD BE DONE PRIOR TO SUMMER, OR "HOT" SEASON. IN THIS WAY OPERATION OF THE TURBOCHARGER AT MAXIMUM EFFICIENCY IS ASSURED.

DIRT FOULING OF THE BLOWER IMPELLER AND DIFFUSER IS DETRIMENTAL TO THEIR PERFORMANCE. AIR PASSAGES WITH VERY SMOOTH SURFACES ARE ESSENTIAL BECAUSE THEY AFFECT THE EFFICIENCY LEVELS DUE TO THE HIGH AIR STREAM VELOCITIES THROUGH THE IMPELLER AND DIFFUSER. WHEN NEW, THE IMPELLER AND DIFFUSER SURFACES HAVE A MICRO-FINISH, BUT DIRT BUILD-UP ROUGHENS THE SURFACES AND CAUSES A HIGH RESISTANCE TO AIR FLOW AND GENERATES HEAT. DIRT FOULING REDUCES THE CAPACITY AND EFFICIENCY BY CHANGING THE AIR PASSAGE OR VELOCITY DISTRIBUTION AND GENERATES HEAT WITH ENERGY NORMALLY USED FOR COMPRESSION. (THE IMPELLER AND DIFFUSER SHOULD BE CLEANED ONCE A YEAR. IT MAY BE NECESSARY TO CLEAN THE TURBOCHARGER TWICE A YEAR IF DUSTY OR DIRTY ATMOSPHERIC CONDITIONS EXIST. A CLEANING SCHEDULE SHOULD BE SET UP ACCORDING TO THE AIR FILTRATION SYSTEM AND OPERATING AND ATMOSPHERIC CONDITIONS.)

1. Inspect blower journal bearing and thrust bearing every 5000 hours of engine operation. See Section 7 for removal. If clearance exceeds the limits shown on Fig. 7-1 or 7-1A, replace bearings.
2. Inspect turbine bearing every 10,000 hours. See Section 7 for removal. If clearance exceeds the limits shown on Fig. 7-1 or 7-1A, replace bearing.
3. Clean and polish scored spots in bearings if clearance is not exceeded.
4. Inspect turbine blades and impeller vanes for cracks. Use Dyecheck or Zyglo to inspect for cracks. Zyglo is manufactured by Magnaflux Corporation, Chicago 31, Illinois.

NOTE: TURBOCHARGERS HAVE A DAMPING OR "LASHING WIRE" THAT PASSES THROUGH A DRILLED HOLE NEAR THE TIP OF EACH TURBINE BLADE. THIS WIRE IS A SUPER ALLOY

AND MUST BE REPLACED AT THE FACTORY TO ASSURE CORRECT BALANCE.

5. Clean rotor and diffuser every 10,000 hours of engine operation to prevent loss of performance due to deposits on impeller, diffuser, and turbine blades. Avoid scratching the rotor when cleaning.
6. Clean impeller, nozzle ring, and seal rings with an approved cleaning solvent that leaves no oil film.

CAUTION! DO NOT USE CAUSTIC SOLUTION, WIRE BRUSH, OR HARD SCRAPER TO CLEAN IMPELLER. A WOODEN SCRAPER IS RECOMMENDED TO REMOVE HEAVY DEPOSITS. IMPELLER SHOULD BE REMOVED FROM ROTOR TO THOROUGHLY CLEAN VANES AND BACK SIDE. SEE SECTION 7 FOR REMOVAL.

7. Clean water jackets of the turbine inlet and discharge casings of any deposits of scale or sludge annually. Follow process used for engine water jacket cleaning.
8. Blow out oil lines with compressed air.

NOTE: THE CLEANING AND INSPECTION HOURS REFERRED TO IN THIS SECTION ARE RECOMMENDED BY THE FACTORY. ATMOSPHERIC AND OPERATING CONDITIONS MAY REQUIRE MORE, OR LESS, FREQUENT INSPECTIONS. THE CUSTOMER IS RESPONSIBLE FOR EVALUATING HIS OPERATING CONDITIONS AND ESTABLISHING HIS OWN CLEANING SCHEDULE.

Piping

The turbocharger should never be used to support piping nor should piping be used to support the turbocharger as this will distort its casings. Supports are provided for installing the turbocharger on the engine. Air inlet piping should be supported independently and never by the turbocharger. Expansion joints should be installed in the air inlet and exhaust piping.

Storage of Turbocharger and Spare Parts

When a turbocharger is stored for long periods it should be protected as follows:

1. Run Nox-Rust #207 or MIL-C-16173C, Grade 2 compound through the bearings to prevent rust. This is accomplished by pouring 1/2 pint of compound into the oil feed lines while rotating the impeller by hand. Allow excess compound to drain off and cap line connections.
2. All openings into the turbocharger should be sealed off to prevent exchange of atmosphere as follows:
   a. Cover casing flange openings (Fig. 6-1) with 1/8" thick neoprene gasket material. Position 3/4" exterior plywood covers over gaskets and secure with bolts.
   b. After closing, treat all bolts and nuts holding flange covers and any exposed flange face surfaces with Tectyl #506 or equal. Cover oil and water inlet and outlet opening with plastic caps or tape.
3. Spare parts should be protected as follows:
   a. Coat all machined surfaces of spare parts with MIL-C-16173C compound and place in a box of seasoned lumber to prevent rust. (The nozzle ring, turbine blades, damping wire, turbine disc, or baffles and diffuser should not be treated with compounds as they do not rust.)
   b. The rotor assembly should be boxed and supported tightly on its shaft to prevent movement and possible damage from rough handling. The impeller and turbine blades must never act as a support for the rotor assembly.

NOTE: WHEN A TURBOCHARGER IS PUT BACK INTO SERVICE IT IS NOT NECESSARY TO DISMANTLE AND REMOVE THE RUST PROTECTION COMPOUND FROM THE BEARINGS; IT IS COMPLETELY SOLUBLE AND COMPATIBLE WITH STANDARD LUBRICATING OILS.

RUST PROTECTION SHOULD BE REMOVED FROM THE OUTSIDE FLANGES OF THE TURBOCHARGER OR ANY SPARE PARTS WITH AN APPROVED CLEANING SOLVENT BEFORE BEING PUT INTO SERVICE.

WHEN A PROTECTIVE COATING FAILS, IT SHOULD BE REMOVED WITH AN APPROVED CLEANING SOLVENT AND RECOATED.

Preparation for Return Shipments

Prepare turbocharger as described in "Storage of Turbocharger and Spare Parts" to prevent rust and exchange of atmosphere. Skid-mount the complete turbocharger and secure tightly.

If rotor assembly is shipped separately it should be prepared to prevent rust and boxed and supported tightly on its shaft to prevent movement and possible damage from rough handling. The impeller and turbine blades must never be used to support the rotor assembly.

OPERATION AND MAINTENANCE MANUAL
7798 HP DIESEL GENERATOR SET
MAUI ELECTRIC CO.
MAALAEA POWER PLANT
KAHULUI, MAUI, HAWAII
COLT-65-206192

Mew
Diesel 8 - Book 1

HAWAIIAN ELECTRIC CO., INC. POWER PLANT	
VENDOR DWG. & DATA	
FILE P.O. NO.	REV.
612.024.03-19	0
TYPE OF APPROVAL:	
☐ Prelim Submit Final Copy	
☐ As noted, revise & resubmit for approval	
☐ As noted, revise & submit Final Copy	
☑ Final	
☐ As to substance only without comments	
☐ Submit Transparency	
APPROVED BY: R.B. Preitas	DATE 6/4/97
Reviewed	M / E / C

Type PC-2V Diesel Engine

Colt Industries

Fairbanks Morse Engine Division

*S.E.M.T.-Pielstick is a registered trademark of Societe d'Etudes de Machines Thermiques, Paris, France

S.E.M.T. PIELSTICK

Data and Specifications Subject To Change Without Notice.

A5. 18000 Hours (Continued)

6. Injectors	Check nozzle hole diameter and replace tip if diameter has enlarged over 10%. Use gauge to check hole.
7. Main Bearing Shells	- Remove shells from two main bearings and inspect visually.
8. Pistons	- Measure compression ring grooves. Replace all compression and oil scraper rings. - Replace piston pin seals and lockplates. - Check piston pin tubes for tightness and clean. - Remachine first two ring grooves for oversize rings, if required.
9. Connecting Rods	- Check big end clearances with a feeler gauge before removal from engine. - Inspect big end bearing shells. - Inspect and measure small end bushings.
10. Liners	- Measure for wear. - Deglaze liner surface for seating new rings.
11. Inlet Valves	- Reface valves and seats, if necessary. - Check stem and bushing wear.
12. Cylinder Heads	- Clean gasket seating surfaces. - Replace cylinder head gaskets

A6. 36000 Hours

1. Perform all 1500 hour operations.
2. Perform all 3000 hour operations.
3. Perform all 6000 hour operations
4. Perform all 12000 hour operations.
5. Perform all 18000 hour operations.

6. Partial Disassembly of Engine	Remove manifolds, piping, cylinder heads, piston and rod assemblies, liners and jackets and injection pumps.
7. Injectors	- Remove from engine. - Dismantle and check for worn parts, especially needle, needle barrel and nozzle, and water passage holes. Replace parts, if required.

A5. 18000 Hours (Continued)

6. Injectors	· Check nozzle hole diameter and replace tip if diameter has enlarged over 10%. Use gauge to check hole.
7. Main Bearing Shells	· Remove shells from two main bearings and inspect visually.
8. Pistons	· Measure compression ring grooves.
	Replace all compression and oil scraper rings
	· Replace piston pin seals and lockplates
	Check piston pin tubes for tightness and clean.
	· Remachine first two ring grooves for oversize rings, if required.
9. Connecting Rods	· Check big end clearances with a feeler gauge before removal from engine.
	· Inspect big end bearing shells.
	· Inspect and measure small end bushings.
10. Liners	· Measure for wear.
	· Deglaze liner surface for seating new rings.
11. Inlet Valves	· Reface valves and seats, if necessary.
	Check stem and bushing wear.
12. Cylinder Heads	· Clean gasket seating surfaces.
	· Replace cylinder head gaskets.

A6. 36000 Hours

1. Perform all 1500 hour operations.
2. Perform all 3000 hour operations.
3. Perform all 6000 hour operations.
4. Perform all 12000 hour operations.
5. Perform all 18000 hour operations.

6. Partial Disassembly of Engine	Remove manifolds, piping, cylinder heads, piston and rod assemblies, liners and jackets and injection pumps.
7. Injectors	· Remove from engine.
	Dismantle and check for worn parts, especially needle, needle barrel and nozzle, and water passage holes.
	· Replace parts, if required

for reference

MITSUBISHI M.A.N. L,V 52/55 TYPE ENGINE

MAINTENANCE STANDARD CARD

MAINTENANCE REQUIREMENTS

SERVICING ITEMS OVER 7,000 SERVICE HOURS

MITSUBISHI HEAVY INDUSTRIES, LTD.
YOKOHAMA SHIPYARD & ENGINE WORKS

INCLUDING 3 SHEETS WITH COVER

DESIGNING SECTION DIESEL ENGINE DEPT.		AGREED				
CHIEF OF SECT		HISTORY OF DRAWING				
APPROVED	[illegible]					
CHECKED						
DRAWN	Y. Nimiuchi	TYPE CLASS NO	L.V 52/55	DRAWING NO	D3-77-4 (3/3)	Rev.
DATE OF ISSUE	[illegible]					

	MAINTENANCE SCHEDULE	TYPE LV52/55A	SECTION 3 SHEET 2

1. The standard maintenance intervals at time residue heavy oil is used as fuel oil are tabulated. The intervals, however, may vary depending upon control condition, operating condition and servicing condition of the engine.

2. Maintenance intervals with "○" mark indicate the initial maintenance requirement, while those with "●" mark indicate the maintenance requirement under normal operating condition, and those with "●●" mark indicate the maintenance requirement between above two intervals, for instance, between 3,000 - 4,000 hours.

	MAINTENANCE SCHEDULE	TYPE LV52/55A	SECTION 3 SHEET 3

No.		Maintenance Schedule		Maintenance Interval (H)									
		Part Description	Work Requirement	200	500	1000	1500	2000	3000	4000	5000	6000	8000
1.		Max. cyl. pressure	Measuring	●									
			At the same time, measure the rack for each cylinder										
2.		Lubricating oil	Confirm oil supply to bearings and pistons		●								
			Check oil supply to valve gear			●							
			Sampling and analysis		●								
			Check inside of crankcase		○ after overhaul								
3.	515	Pump control link	Supply of oil or grease	●	●								
	511	Fuel injection pump	and check operation										
4.	503	Valve gear rocker arm	Check operation	●									
(5.)		Reduction gear L.O.	Sampling and analysis					●					
6.		Reduction gear	Check tooth face					●					
7.	301	Crankshaft	Measure deflection	○	○				●	●			
8.	506	Cam	Visually check cam and roller	○					●	●			
9.	105	Fuel injection valve	Injection test				●	●					
			Disassembling, repair							●	●		

	MAINTENANCE SCHEDULE	TYPE LV52/55A	SECTION 3 SHEET 4

No.		Maintenance Schedule		Maintenance Interval (H)									
		Part Description	Work Requirement	200	500	1000	1500	2000	3000	4000	5000	6000	8000
10.	102 103	Intake, exhaust valves	Check and adjust tappet clearance	○				◎	◎				
11.	202	Frame	Check fundation bolts for looseness		○				◎	●			
12.	103	Exhaust valves	Disassembling, inspection						◎	●			
			Seats lapping, grinding						◎	◎			
			Replacement of bush -if necessary-										
	523	Reversing gear	Check oil level										
			Ferry use		●						)		
			The others						●	●			

MAINTENANCE SCHEDULE

TYPE L,V52/55A

SECTION 3

SHEET 5

No.		Maintenance Schedule		Maintenance Interval (H)										
		Part Description	Work Requirement	500	1500	2000	3000	4000	5000	6000	8000	10000	12000	
13	102	Intake valves	Disassembling, inspection					●	●					
			Seats lapping, grinding					●	●					
			Replacement of bush -if necessary-											
14.	203 404	Tightening bolts of main parts	Check for looseness	after overhaul ○								●	●	
(15.)		(Reduction gear	Check foundation bolts for looseness	○					●	)				
16.	504	Camshaft driving gear	Visual inspection	○				●	●					
			Measuring of backlash					●	●					
			Inspection of bearing clearance									●	●	
			Inspection of camshaft gear spring									●	●	
17.	511	Fuel injection pump	Check the rack for stick		●	●								
18.	750	Turbo-charger	Check holding-down bolts for looseness				●	●						
			Measure thrust bearing clearance				●	●						
			Remove and clean							●	●			
19.	8118	Cylinder lubrication nozzl	Check lubrication condition		after overhaul ○	○								
20.		Governor	Exchange hydraulic oil						○	○		●	●	

	MAINTENANCE SCHEDULE	TYPE LV52/55A	SECTION 3 / SHEET 6

No.		Maintenance Schedule		Maintenance Interval (H)									
		Part Description	Work Requirement	4000	5000	6000	8000	10000	12000	16000	20000	24000	
21.	101	Cylinder cover	Inspection, cleaning					●	●				
22.	104	Starting valve	Disassembling					●	●				
			Repair, sealing test					●	●				
23.	106	Cylinder safety valve	Disassembling						●	●			
			Repair, pressure test						●	●			
24.	107	Indicator valve	Disassembling, inspection					●	●				
25.	205	Cylinder liner	Measuring of inner diam.					●	●				
			Lapping of cylinder block and liner -if necessary-										
		Liner supporting ring	Inspection of installing face							2P only ○		○	
26.	313	Damper	Checking of spring					●	●				
27.	401	Piston	Overhauling					●	●				
			Measuring of ring and ring groove					●	●				
			Disassembly, inspection					2P only ○	○			●	●
			Exchange of ring - Top, - reference value of actual performance -						●				

	MAINTENANCE SCHEDULE	TYPE L/52/55A	SECTION 3 SHEET 7

No.		Maintenance Schedule		Maintenance Interval (H)									
		Part Description	Work Requirement	4000	5000	6000	8000	10000	12000	16000	20000	24000
			Exchange of ring - Oil								●	●
			Exchange of rings - No.2-No.4								●	
			-reference value of actual performance -									
28.	202	Main bearing	Overhauling				2P only	○	○		●	●
			Inspection, measuring of thickness				2P only	○	○		●	●

MAINTENANCE SCHEDULE | TYPE L,V52/55A | SECTION 3 | SHEET 8

No.		Maintenance Schedule		Maintenance Interval (H)							
		Part Description	Work Requirement	8000	10000	12000	16000	20000	24000	30000	40000
	404	Crankpin bearing	Overhauling		2P only ○	○		●	●		
			Inspection, measuring of thickness		2P only ○	○		●	●		
		Swing pin bearing	Inspection		2P only ○	○				●	●
		Piston pin bearing	Inspection		2P only ○	○				●	●
29.	206	Tie rod	Check for looseness				●	●			
		Tension bolt	Check for looseness		2 cyls. only ○	○	●	●			
30.	302	Balance weight	Check holding-down bolts for looseness		●	●					
31.	503	Valve gear rocker arm	Checking of bearing		2P only ○	○			●	●	
		Valve gear tappet guide	Inspection		2P only ○	○			●	●	
32.	511	Fuel injection pump	Overhauling					2P only ○	○	●	●
			Inspection of worn parts and repuir					2P only ○	○	●	●
33.	513	Cam bearing	Measuring of bearing clearance		●	●					
34.	601	Charging air manifold	Inspect for contamination	when the cover is removed. ●		●					
35.	602	Exhaust gas manifold	Inspect for contamination	when the cover is removed. ●		●					
36.	608	Air cooler	Inspect for contamination		1P only ○	○				●	
			Cleaning							●	

	MAINTENANCE SCHEDULE	TYPE	SECTION
		LV52/55A	3
			SHEET 9

No.		Maintenance Schedule		Maintenance Interval (H)								
		Part Description	Work Requirement	8000	10000	12000	16000	20000	24000	30000	40000	
37.	521	Governor driving gear	Visual inspection		●	●						
39.	204	Cylinder block	Inspection of cooling water passage							●		
40.		Governor	Inspection							●	●	

Maintenance Card No.	
Equipment Code No.	101

CYLINDER COVER

1. SERVICING ITEM
   a) Disassembling and cleaning
   b) Serching of the combustion and valve hole surfaces by penetrant inspection and inspection of the seal ring for scratches
   c) Inspection of the cooling water passages
   d) Inspection and grinding of the fuel injection valve and exhaust valve seats
   e) Inspection and grinding of the intake valve seat
   f) Inspection and grinding of the starting valve and safety valve seats
   g) Inspection of valve fixing bolts and screws

2. DESCRIPTION OF PARTS AND CODES

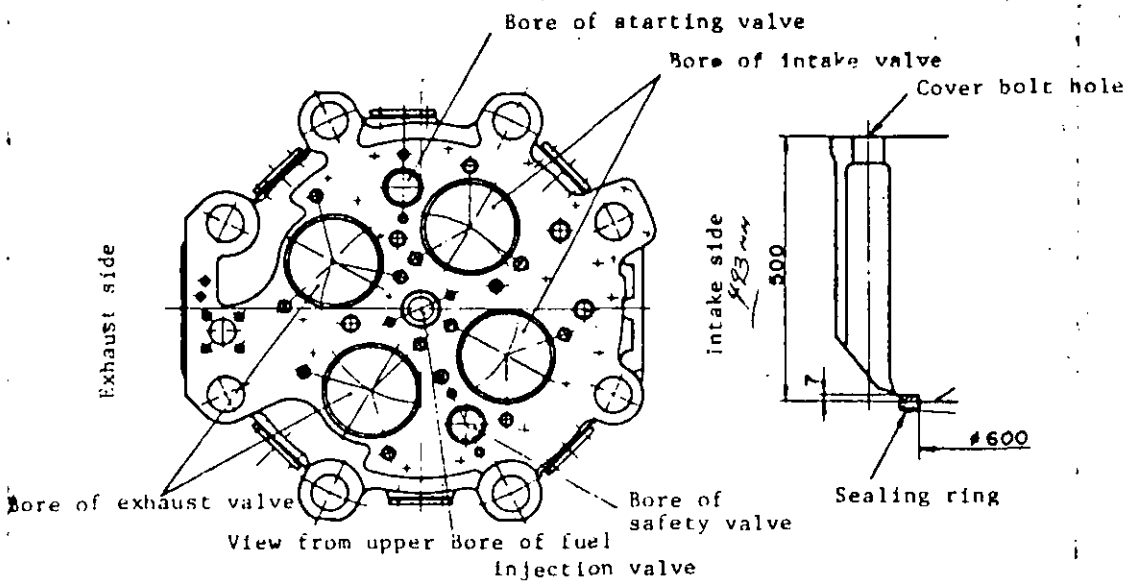

3. REQUIREMENTS FOR OVERHAUL

Refer to Maintenance Standard Card (No. 5510101): REMOVAL AND INSTALLATION OF CYLINDER COVER.

4. OVERHAUL PROCEDURES

For removing valves, see Maintenance Standard Cards (No. 5510202, 5510401, 5510501, 5510601 and 5510701). To inspect the cooling water passage, remove the blank plate.

5. REQUIRED TOOLS

Penetration liquid, grinding devices for seal ring and valve seat, carborundums (#500 - 800), cleaning liquid, spanner.

6. SERVICING INTERVALS

	Initial	Normal
a) Disassembling and cleaning.	-	about 7,000-8,000Hrs
b) Searching of the combustion surface inspection by penetrant and inspection of the seal ring for scratches.	-	about 7,000-8,000Hrs
c) Inspection of cooling water passages.	-	about 15,000-16,000Hrs
d) Inspection and grinding of the fuel injection valve and exhaust valve seats.	about 2,000-2,500Hrs	about 7,000-8,000Hrs
e) Inspection and grinding of the intake vale seat.	about 3,500-4,000Hrs	about 7,000-8,000Hrs
f) Inspection of the starting valve and safety valve seats.	-	about 7,000-8,000Hrs
g) Inspection of valve fixing bolts and screws.	-	about 7,000-8,000Hrs

7. SERVICING PROCEDURES

a) Disassembling and cleaning

Remove scale on the combustion surface, the top surface of the cylinder cover, fuel injection valve c.w. drain and fuel oil drain passage, vlave inserting holes and intake and exhaust air passages.

b-1) Searching of the combustion surface by penetrant inspection

(1) Cracks depth to 1mm shall be removed carefully with radius by grinding.

Equipment Code No. 104

STARTING VALVE

1. SERVICING ITEM

a) Disassembling and cleaning

b) Valve seat grinding

c) Clearance adjustment

d) Blind insert seat grinding (Type Vee Engine)

2. DESCRIPTION OF PARTS AND CODES

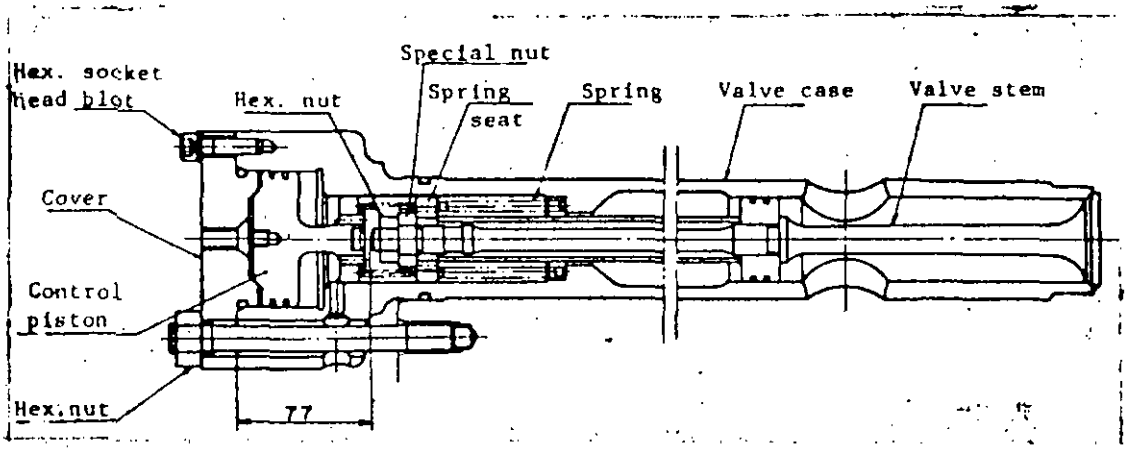

3. REQUIREMENTS FOR OVERHAUL

(1) Stop the engine → shut the starting air main valve → remove the cylinder cover bonnet.

(2) Remove the control air branch pipe (inside the cylinder cover).

(3) Remove the starting valve fixing nuts.

(4) Screw a jack bolts (M 12) in the jack bolt holes, and lift the starting valve upward.

4. OVERHAUL PROCEDURES

(1) Loosen the hex. socket head screws, and remove the cover.

(2) Pull the control piston. (use M10 screw hole)

(3) Loosen a nut and special nut, remove a spring and spring seat.

4. OVERHAUL PROCEDURES

(1) Loosen the hex. socket head screws, and remove the cover.

(2) Pull the control piston. (use M10 screw hole)

(3) Loosen a nut and special nut, remove a spring and spring seat.

(4) By tapping the valve stem head by wood hammer, pull the valve stem.

5. REQUIRED TOOLS

Spanner, torque wrench, sliding T-handle, puller bolts, jack up bolt, box spanner, extension bar, hex. wrench key, screwdriver, vernier calipers, cleansing oil, waste, emery cloth, carborundum (#800)), molybdenum powder spray, heat proof powder, touching-paint.

6. REQUIREMENTS FOR SERVICING

		Initial	Normal
a)	Disassembly and cleaning	-	about 7,000 - 8,000 Hrs
b)	Valve seat grinding	-	about 7,000 - 8,000 Hrs
c)	Clearance adjustment	-	about 7,000 - 8,000 Hrs
d)	Grinding of seating surface with cover	-	about 7,000 - 8,000 Hrs

7. SERVICING PROCEDURES

a) Disassembly and cleaning

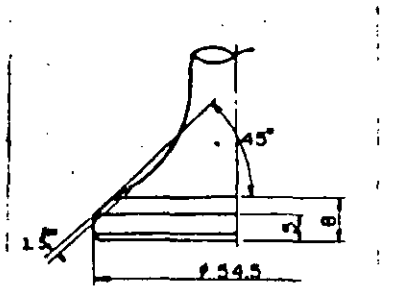

(1) Measure clearance between the valve stem head and air cylinder. For standard clearance, see Item c) below.

(2) Check contacting status of the valve seat with the cylinder cover, rusting around the valve body and condition of the packing.

(3) Check to see if the spring is broken and piston ring is stuck.

b) Valve seat grinding

When scratches are observed, they should be removed by a carborundum (#800).

Limit for grinding of the valve seat shall be as shown in Fig. above. When amount of the valve seat wear exceeds it with a new one.

c) Clearance adjustment

Check the dimensions between the valve stem head and top of the valve casing are more than 75.5mm. (77mm at the time of newly made)

If dimensions are less than 75.5mm, insure that the clearance between control piston and valve stem is kept 1.5 - 3mm after assembled by machine correct. (See Fig. next page.)

Maintenance Card No.	5520301
Equipment Code No.	203

OVERHAULING OF MAIN BEARING AND CRANK PIN BEARING

1. SERVICING ITEM

a) Checking main bearing clamping bolts

b) Checking external view of main bearing cap

c) Checking external view of main bearing

Checking contacting surface

Measure bearing metal thickness

d) Measure volum of crush and extend allowance

2. DESCRIPTION OF PARTS AND CODES

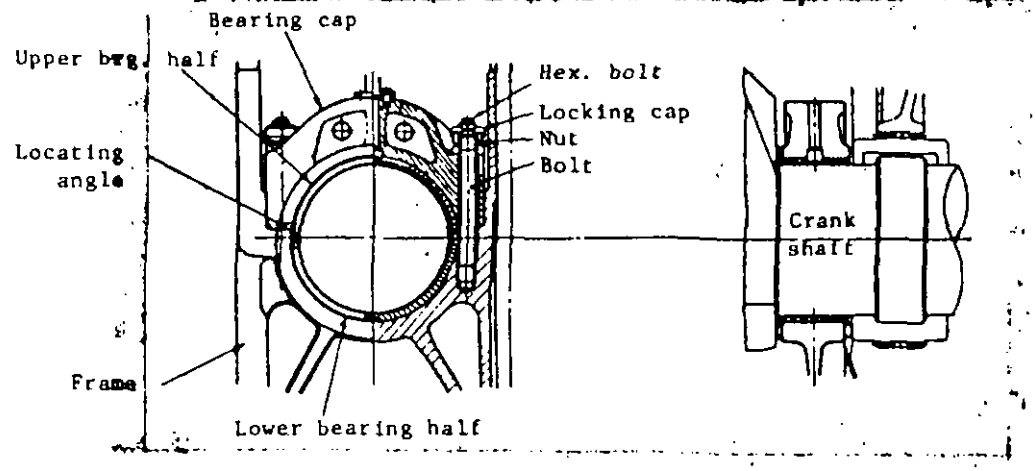

3. REQUIREMENTS FOR REMOVING

Stop the engine close the starting air main valve open the indicator valve turning gear "engaged" turning the crankshaft stop the L.O. priming pump (after 10 minutes engine stops) remove crank case door

4. OVERHAUL PROCEDURES

(1) Remove the main bearing lub. oil pipe and the lub. oil pipe at the lower end of the cylinder liner.

(2) Remove the locking cap of the main bearing bolt.

(3) Loosen nuts by means of a lever block.

(4) After loosen nuts, pull the bearing cover out of the frame with a main bearing puller or ϕ 8 wire.

(5) Lifting the bearing cover with a wire, place it on the crank arm by using a support.
(6) Fix the bearing cover to the balance weight with the bracket, and turn by about 90°.
(7) Move the bearing cover out of the crankcase (wieght: about 95 kg).
(8) Remove the upper bearing metal by means of an eyebolt.
(9) Remove the locating angle with a hexagon bar spanner.
(10) Inserting removing tool into an oil hole, turn the crankshaft to bring the lower bearing upward, and remove it with any eyebolt.

5. REQUIRED TOOLS

Dial gauge, measuring bar, special spanner, impact spanner, shackle, lever block, supprot arm for pulling, puller, spanner, socket wrench, ratchet handle, support block, hook, easy block, support, eye bolt, key wrench, main bearing removing and inserting tool, roller support, Bearing guide, spanner, driver, camera and oil coat.

6. SERVICING INTERVAL

		Initial	Normal
a)	Checking the main bearing clamping bolts	Appropriate quantity about 7,000 - 8,000 Hrs.	about 15,000 - 16,000 Hrs.
b)	Checking external appearance of the main bearing cap	Appropriate quantity about 7,000 - 8,000 Hrs.	about 15,000 - 16,000 Hrs
c)	Checking external appearance of the main bearing metal Checking contact condition Measuring bearing metal thickness	Appropriate quantity about 7,000 - 8,000 Hrs.	about 15,000 - 16,000 Hrs.
d)	Measuring the main bearing crush and extend	Appropriate quantity about 7,000 - 8,000 Hrs.	about 15,000 - 16,000 Hrs.

MAINTENANCE OF MAIN BEARING AND CRANKPIN BEARING

1. SERVICING ITEM

   a) Inspection of sliding surface

2. DESCRIPTION OF PARTS AND CODES

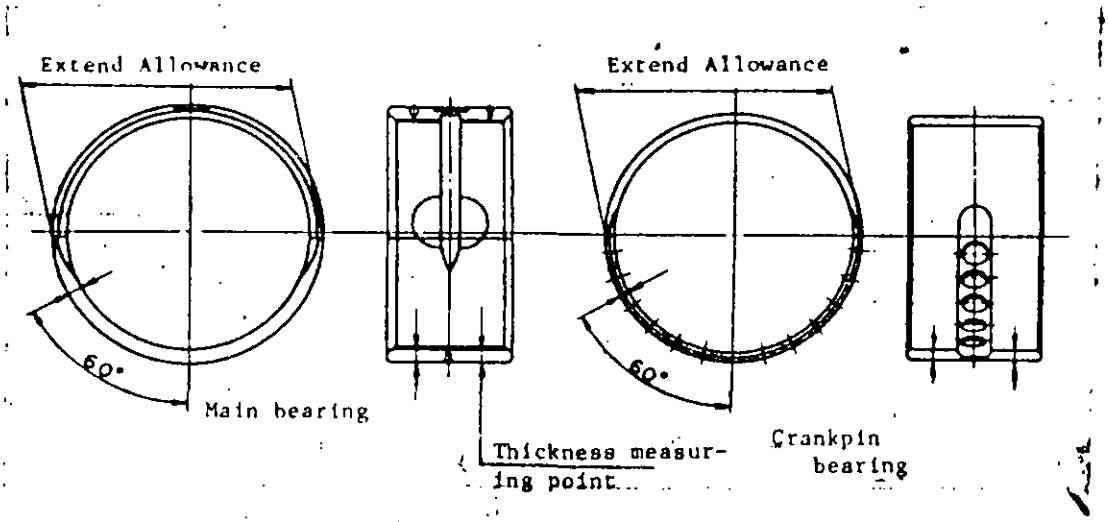

3. REQUIREMENTS FOR REMOVING

   Bearings must have been disassembled and removed.

4. OVERHAUL PROCEDURES

   For overhaul of the main bearing, see Maintenance Standard Card: OVERHAUL OF MAIN BEARINGS (No.5520301).
   For removing of the crankpin bearings, see Maintenance Standard Card: REMOVING OF CRANKPIN BEARING (No.5540401).

5. REQUIRED TOOLS

   Cleansing oil, waste, micrometer and camera.

6. SERVICING INTERVAL

   (1) When the exposed area of lead-bronze layer reaches about 30% of total pressure space, it is recommended to perform a re-overlay as repair is relatively easy and economical. Increase in the lead-bronze exposure area may cause exfoliation of lead due to heat, which in turn tends to increase coefficient of friction and as a result seizure can be caused.

   Refer to No.5520301-7-2 for main bearing.

   (2) Wear of the overlay is dependent upon dirt contained in lubricating oil; that is, metal particles. However, on the basis

of actual performance optimum servicing interval is considered to be as shown below:

	Constant Speed Engine (in case of normal load about 90-100%)	Marine Engine (in case of normal load about 80-85%)
a) Replace new one	15,000-16,000 Hrs	24,000-26,000 Hrs

7. SERVICING PROCEDURES

Clean repaired bearings in cleansing oil, and measure their thickness (at every 60° at both the forward and astern sides, total 6 points). At the same time, take a record of overlay wear. (Typical wear of the bearings should be photographed.)

Determination of serviceability

Before the repair is started, check used bearings to determine whether they are repairable according to following standards:

External appearance

1) Unserviceable because of excessive hitting flows and streaks.

2) Unreparable or unserviceable because of frettings on the back and joint.

Size

1) Extend allowance is less than the size indicated.

Main bearing: 430 mm or less

Crankpin bearings: 414 mm or less

2) Crush is reduced by 0.04 mm or above.

Sliding surface: Lead is exfoliated and defect is observed in the lead-bronze structure.

Equipment Code No. 401

OVERHAUL OF PISTON PIN

1. SERVICING ITEM

a) Checking the piston side cover and replacing O-ring
   Penetrant inspection the stopper
   Checking the cover

b) Checking the piston pin

c) Measuring the clearance between the piston pin and bearing
   Replacing the piston pin bearings

2. DESCRIPTION OF PARTS AND CODES

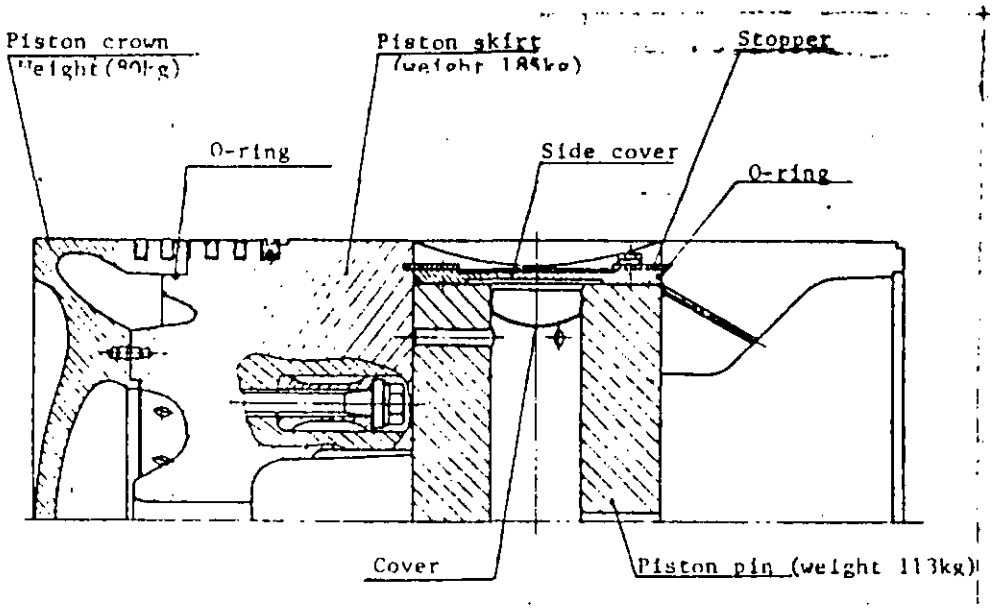

3. REQUIREMENTS FOR OVERHAUL

Overhaul should be performed after the piston (connecting rod) pulled out.

For removing the piston, see Maintenance Standard Card (No.5540101).

4. OVERHAUL PROCEDURES

(1) Removing the piston side cover

After remove the stopper of side cover.

Attach a puller bolt into the tapped hole (M12) at the side cover center and pull the cover out slowly. As O-ring groove can be damaged if the piston side cover is declined, the cover

should be carefully pulled out.

(2) Pulling the piston pin

Lift up the piston upside down (use clamping bolt hole of big end side). Immerse the piston in a hot oil bath (about 80°C) for about 10 min., and keeping the piston vertically lifted, attach a piston pin puller to the piston pin and pull the piston pin out.

Before pulling the pin, adjust the position of the pin being lifted so that the pin is able to rotate in the bore. However, just after engine operated or over 5,000 service hrs. piston is able to pull out without heating.

(3) Exchanging the piston pin bearing metal

After machining off the bearing metal, insert the newly-made one, but when it happens to require the exchange, please contact with us on the matter.

5. REQUIRED TOOLS

Puller bolt (M12), screw driver, penetration liquid, feeler gauge, socket wrench, hot oil bath, grease and micrometer.

6. SERVICING INTERVAL

		Initial	Normal
a)	Checking the piston side cover and replacing O-ring	-	about 7,000 - 8,000 Hrs
	Penetrant inspection the stopper		
	Checking the cover		
b)	Checking the piston pin and penetrant inspection the piston pin bore	-	about 15,000 - 16,000 Hrs about 7,000 - 8,000 Hrs
c)	Measuring clearance between the piston pin and bearing		about 7,000 - 8,000 Hrs
	Replacing the piston pin bearings		Depending upon the result of measuring

7. SERVICING PROCEDURES

a-1) Checking the piston side cover

Check looseness of the piston side cover and the piston pin bore without O-ring and measure a clearance between them (the clearance at time of newly made is 0.05 mm).

If the measured clearance is 0.5 mm or more, repair the step of the piston side cover inserting hole and at the same time replace the cover with an oversize cover.

Since O-ring at the piston pin cover reduces its elastic effect with increase in service hours, replace it with new one at every 7,000 - 8,000 service hours.

Even when the edge of the cover is found to be defective, it can be still serviceable provided O-ring can be properly installed.

a-2) Penetrant inspection the side cover

Perform a penetrant inspection to make certain that there is no score on the surface.

a-3) Checking the cover

By a hammering check the cover to see if it is loosened. If the

OVERHAUL OF PISTON CROWN

1. SERVICING ITEM

a) Measuring the shoulder clearance between piston crown and skirt

b) Checking the piston bolt hole

Penetrant inspection of the bolt

Checking and cleaning the piston crown cooling space

Replacing O-ring

c) Measuring the piston ring groove dimension

d) Penetrant inspection of the piston pin bore, piston skirt ring groove and seating surface of clamping bolt.

2. DESCRIPTION OF PARTS AND CODES

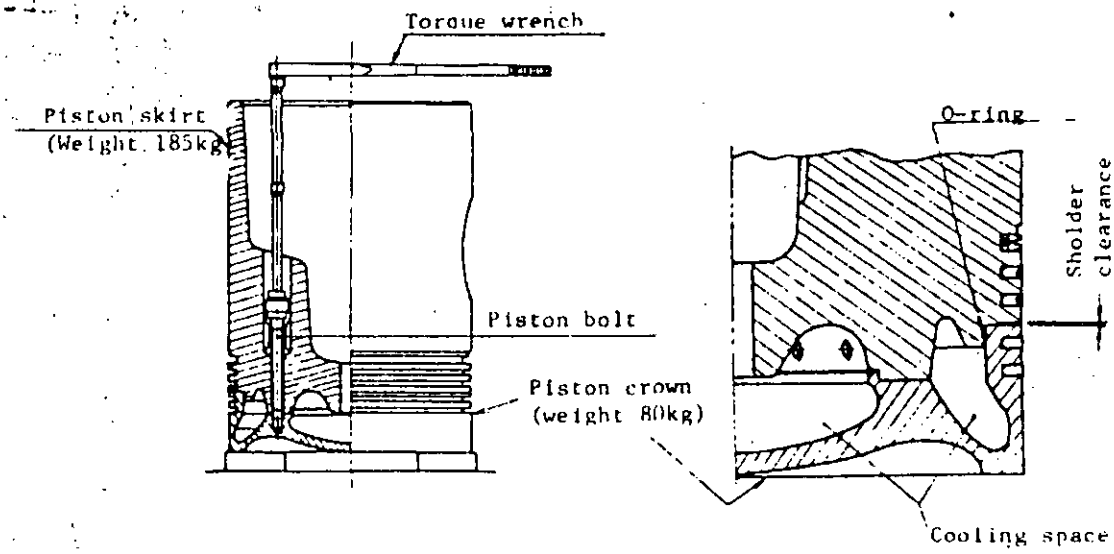

3. REQUIREMENTS FOR OVERHAUL

For overhaul of the piston pin, see Maintenance Standard Card (No.5540102).

4. OVERHAUL PROCEDURES

(1) Using a spanner socket (width across flats 32 mm), extension bar and torque wrench, loosen the piston bolt and remove the piston bolt and washer. However, when unscrewing bolts removing torque should be kept within 60 kg-m. In case of over torque, replace with new bolts.

(2) Attach a lumber to the piston pin bore and lifting the piston skirt, then disassemble the piston crown and piston skirt.

5. REQUIRED TOOLS

Spanner socket, lumber, extension bar, torque wrench (0 ~ 28 kg-m), emery cloth, scraper, feeler gauge, calipers, tap (M24 x 2), cleansing oil, Penetration liquid, manaflux inspection equipment and touching-up paint (red lead).

6. SERVICING INTERVAL

	Initial	Normal
a) Measuring sholder clearance between crown and piston skirt	-	about 7,000 - 8,000 Hrs
b) Checking the piston bolt hole Penetrant inspection of the bolt Checking and cleaning the piston crown cooling space Replacing O-ring	-	about 15,000 ~ 16,000 Hrs
c) Measuring the piston ring groove size	-	about 7,000 - 8,000 Hrs

d) Checking the piston pin bore, piston ring groove and bearing surface of clamping bolt.

7. SERVICING PROCEDURES

a) Measuring sholder clearance between the piston crown and skirt

Remove carbon accumulated in the sholder, and measure the clearance with a feeler gauge at 4 peripheral points (S, E, F and A side). Clearance should be measured when the piston is overhauled (the measured clearance shall be regarded as reference record as carbon can accumulate in the sholder during the engine operation). When the piston is disassembled into the crown and skirt, the sholder clearance shall be measured after they are cleaned and reassembled with the piston bolts (this clearance shall be a formal record). Difference in clearances measured when the piston is hand tightened with the piston bolts and that pre-load is 0.01 - 0.02 mm. Slight fretting can be caused on the internal contact surface (tapered surface), but only piston crown that has excessive

unevenness on the internal contact surface should be repaired.

Standard clearance at time of newly made: 0.06 - 0.10mm at time of assembly (before tightening the bolts)

Adjusting limit: When clearance is 0.20 or above, the piston crown and piston skirt contact surface should be machined (lathe machining) in order to adjust the clearance to the standard value.

b-1) Checking the piston bolt hole

The piston bolt may not be loosened because of deformation or partial seizure of the screw thread due to heat. Therefore,

(1) Before assembling the piston, check the bolt hole to see if the bolt can be screwed into the piston crown.

(2) If the thread is too tight, correct the piston crown screw thread (M24 x 2) with a tap.

b-2) Penetrant inspection of the piston bolt

(1) Check the bolt for scores and condition of the thread, and also insure that there is no crack by means of a penetrant inspection or magnaflux inspection. The bolt bearing surface and thread require particularily careful checking. When no abnormal condition is found by above checking, the bolt requires no replacement.

It is recommended to replace the bolt at about every 25,000 - 30,000 service hours.

(2) Check contact condition of the piston skirt and washer using touching-paint.

b-3) Replacing O-ring

O-ring used at the piston crown and piston skirt joint should be replaced at every 15,000 - 16,000 service hours.

Further, it is recommended to replace O-ring whenever the piston is overhauled.

b-4) Checking and cleaning the piston crown cooling space

Remove carbon stuck to the cooling space (including oil hole) with a scraper and emery cloth. Perform a color checking on the inner and outer surface to insure that there is no crack.

c) Measuring the piston ring groove size

Clean the ring groove by cleansing oil and emery cloth.

Using a calipers measure size of the groove (center of the groove

REMOVING CRANKPIN BEARING METAL

1. SERVICING ITEM

a) Checking the crankpin bearing clamping bolt

b) Checking external appearance of the big-end housing and crank pin crown

c) Checking external appearance of the crankpin bearing.

Checking contact condition

Measuring bearing metal thickness

d) Measuring the crankpin bearing metal crush

e) Measuring the swing pin bearing metal clearance

Checking the swing pin

2. DESCRIPTION OF PARTS AND CODES

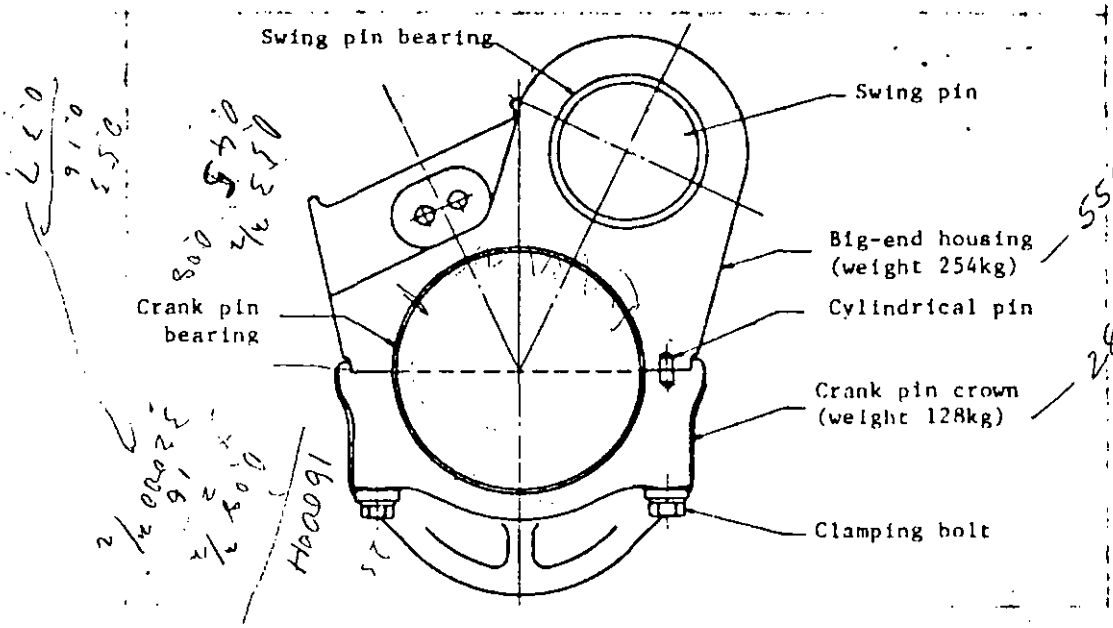

3. REQUIREMENTS FOR OVERHAUL

(1) Remove the crankcase door and engage the turning gear.

(2) Remove the left and right side cylinder covers and pull the piston out.

For removal of the cylinder cover, see Maintenance Standard Card (No.5510101).

For removal of the piston, see Maintenance Standard Card (No. 5540101).

4. OVERHAUL PROCEDURES

(1) By loosening the chain block, rotate the Big-end housing toward lower side after pulling out the piston.

(2) Loosen 4 bearing tightening bolts, and pull out 2 bolts which are diagonally located.

(3) With the crankshaft turned to position the crankpin at T.D.C., place a grating across the crankcase door opening.

(4) With the crankshaft turned, place the upper and lower caps on the grating as shown in the diagram.

(5) Install an eyebolt and chain block into the tap hole (M16) at the crank pin crown side, and remove the crank pin crown by lifting it. The lower bearing metal be carefully lifted so that the lower metal does not fall off.

(6) Remove lower crank pin bearing.

(7) By turning the crankshaft, place the crankpin to TOP position and while pulling the upper bearing cover on the grating, move and take out the cover from the frame. Then, insure that the big-end housing is not hit to the Lub. oil main pipe.

(8) Install an eyebolt into the tap hole (M12) on the swing pin side and pull the swing pin out.

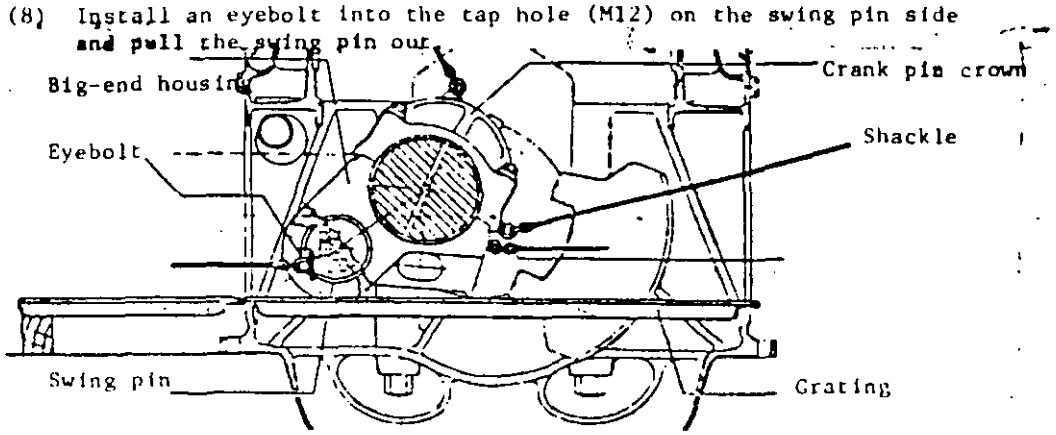

5. REQUIRED TOOLS

Eyebolt (M16,M12), chain blocks (1 ton x 2 sets), lifting wires, tape, chackle, grating, pliers, lead hammer, ring spanner, extension pipe for spanner, penetration liquid, molybdenum powder spray, cleansing oil, waste, feeler guage, micrometer, elongation measuring instrument, and magnaflux inspection equipment.

6. SERVICING INTERVAL

		Initial	Normal
a)	Checking the crank-pin bearing clamping bolts	Appropriate quantity about 7,000-8,000Hrs	about 15,000-16,000Hrs
b)	Checking external appearance of the big end housing and crank pin crown	Appropriate quantity about 7,000-8,000Hrs	about 15,000-16,000Hrs
c)	Checking external appearance of the crankpin bearing Checking contact condition Measuring bearing metal thickness	Appropriate quantity about 7,000-8,000Hrs	about 15,000-16,000Hrs
d)	Measuring the crank-pin bearing crush	Appropriate quantity about 7,000-8,000Hrs	about 15,000-16,000Hrs
e)	Measuring the swing pin bearing clearance Checking the swing pin	Appropriate quantity about 7,000-8,000Hrs	about 15,000-16,000Hrs

7. SERVICING PROCEDURES

a) Checking the crankpin bearing clamping bolt

Check condition of the bearing surface and screw thread of the bolt and perform a penetrant inspection or magnaflux inspection to insure that there is no crack on the bolt. Particularly, the roundness part of the bearing surface, the thread end and thread bottom shall be carefully checked.

Measure a plastic elongation of the bolt under free condition (difference in size between the top surface of bolt head and top surface of a measuring bar). If difference in size is 0.40 mm or more, that bolt should be replaced.

b) Checking external appearance of the big-end housing and crank pin crown

Check the cover mating surface for fretting and the bearing contacting surface for abnormal contacting.

Equipment Code No.	608

AIR COOLER

1. SERVICING ITEM
   a) Cleaning the water side and air side
   b) Hydraulic test
   c) Exchanging zinc protection

2. DESCRIPTION OF PARTS AND CODES

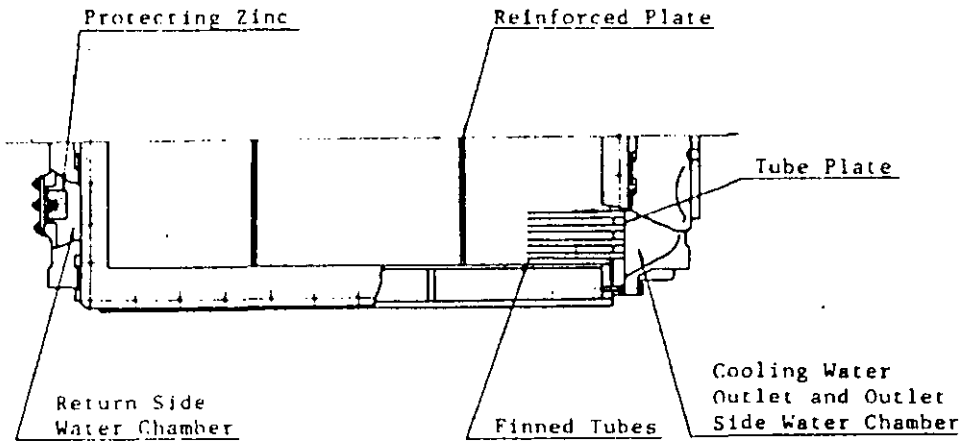

Complete weight: about 1150kg

3. REQUIREMENTS FOR OVERHAUL
   Servicing prescribed here should be performed during the overhaul or at time of an interim inspection.
   1. Remove the turbocharger outlet pipe.
   2. Remove the air cooler outlet pipe.
   3. Unscrew and remove bolts for secondary cooling water inlet and outlet flange.
   4. Attach an eyebolt to the cooler body, and while lifting the cooler, unscrew and remove hex. head bolts.

4. REMOVING PROCEDURES
   1. Unscrew and remove nuts at the cooling water chambers, and remove the water chambers.
   2. Remove the protecting zinc covers.

5. REQUIRED TOOLS
   Spanner, eyebolt, tube cleaning brush, hydraulic testing equipment, alkali cleaning agent, neutral cleaning powder, hot water bath for cleaning purpose, scraper and

compressed air.

6. SERVICING INTERVAL

		Initial	Normal
a)	Cleaning the water and air chamber	-	about 7,000 - 8,000 Hrs
b)	Hydraulic test	-	about 7,000 - 8,000 Hrs
c)	Exchanging the protecting zinc	-	about 7,000 - 8,000 Hrs

7. SERVICING PROCEDURES

a) Cleaning the water and air cooling sides

Check to determine accumulation of scale in the water chambers and cooling water pipes, condition of the protecting zinc (reduction in volume), contamination of the fins at the air side (particularly at the inlet side), rusting and corrosion of the reinforced plate.

It is recommended to determine cleaning interval depending upon the result of this checking.

Remove scale accumulated in the water chambers with a scraper and that in the cooling pipes with a cleaning bar.

Materials stuck at the air side shall be removed by immersing the air side first in a bath containing alkalic solution and then in a bath containing neutral cleansing solution and by stirring the solutions. (temperature of the solution is about 60 - 80°C)

After neutral cleanser is used, the air side should be washed with water and dried by compressed air.

Examples of cleanser are shown below:

Primary solution Shin-Nitto Chemical CM201

Secondary solution CM306

b) Hydraulic test

If a lot of cooling water is detected in the intake pipe, it may be due to cracks of the finned tubes; therefore, in this case perform either testings listed below to locate damaged finned tubes.

(1) Airtight test

Install the return side water chamber, place the cooler vertically, fill cooling water into the finned tubes. Then, install a blank plate for testing and a pressure gauge to

GEK 5033(

MARINE AND INDUSTRIAL ENGINE DIVISION

INDUSTRIAL GAS TURBINES

LM2500 'P' SERIES GAS TURBINES
LM2500 'G' SERIES GAS GENERATORS

ILLUSTRATED PARTS BREAKDOWN

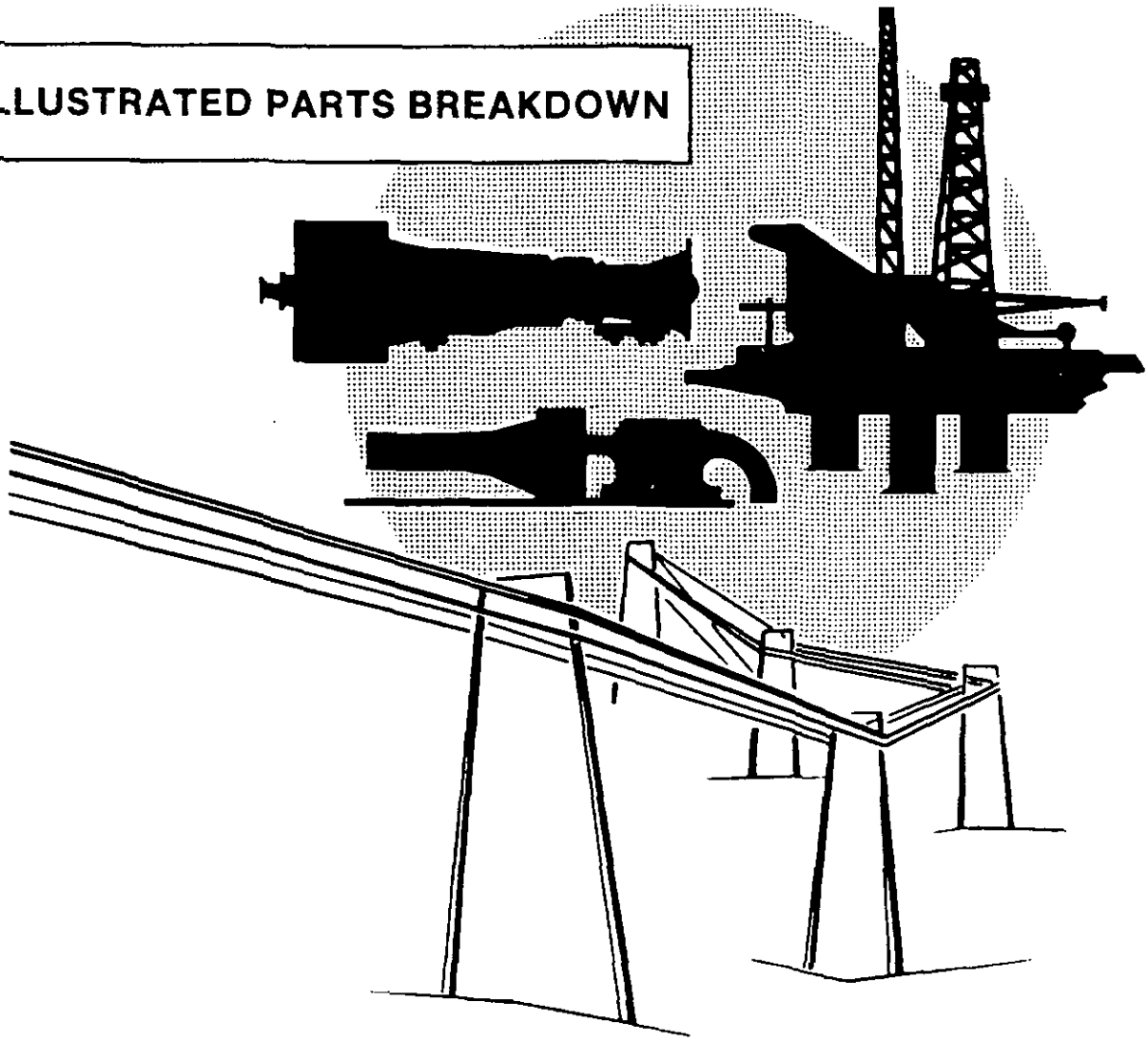

GENERAL ELECTRIC

GE Marine
& Industrial Engines

Customer Service Department
General Electric Company
One Neumann Way, M/D S155
Cincinnati, OH 45215-6301
513 552-2479 (Phone)
513 552-5722 (Fax)

October 16, 1996

(FAX 8*(808) 244-5260)

Mr. Ed Jackson
Maui Electric Company, Ltd.
210 West Kamehameha Avenue
P.O. Box 398
Kahului, Maui, HI 96732-0398

Subject: LM2500 Life Expectation on Different Fuels

Ed,

Per our recent discussion on this subject. The following are the typically expected component lives you would expect when operating LM2500s at rated power on fuels that conform with GE M&I specifications. If the fuel utilized fail to meet our specifications, actual component lives can be substantially reduced.

Fuel	Combustor	Hot Section	Power Turbine
Natural Gas	25,000 hours	25,000 hours	50,000 hours
Liquid Fuels	12,500 hours	12,500 hours	25,000 hours

We trust that this information satisfies your needs.

Best regards,

Tom

Tom Stowell
Customer Service Manager

ASEA BROWN BOVERI

ABB ENERGIE NV

M15 ABB STEAM TURBINE GENERATOR

MAINTENANCE OF AN ATPS TG-SET

1. RECOMMENDATIONS FOR OVERHAULING THE TG-SET

1.1 Introduction

The following recommendations are based on the experience which ABI Energie gained with the maintenance of their steam turbosets.

These recommendations shall serve as a guideline for planning and executir overhauls.

Following an evaluation of experience gained during inspections ar overhauls and of statistics of breakdown for individual components, ABB h drawn up recommendations and plans for overhauls. They are intended as help to operators when planning overhauls as regards the timing, kind, sco and duration of overhaul, as well as the stocks of spare parts to be kept.

The object of the recommendations is to shorten the duration of planr shutdowns and to assure high availability and safety of our turbosets or long-term basis.

ABB
ASEA BROWN BOVERI

ABB ENERGIE NV

Economical operation of a thermal power station is governed not only by the thermal efficiency but also, to a large extent, by the availability of the plant as a whole.

Overhauls are regular inspections, planned to take place at set times, of components or of the whole plant, **with the object to avoid interruptions in service due to failure of components and systems.** Carried out at regular intervals, they enable wear to be detected, pending failure to be recognized in good time and faulty parts to be renewed before they fail altogether.

The overall availability, however, is not only determined by operational interruptions, but also by planned shutdowns. Therefore, such interruption should be kept within economically tolerable limits and should enable optimal results to be obtained from overhauls. This is possible under the following conditions :

- overhauls should be performed at the right time
- the work to be performed should be predicted exactly
- the duration of overhauls should be kept short by comprehensive planning and expert execution.

This necessitates timely, close cooperation between operators and manufacturers.

ASEA BROWN BOVERI

ABB ENERGIE NV

1.2 Kinds of overhaul

It has been found convenient to distinguish between the following kinds of overhaul :

- inspections,
- minor overhauls,
- major overhauls.

a) Inspections (K), duration : several hours up to several days

Inspections, also called daily, weekly or monthly "maintenance", can b planned, but are preferably performed when the unit is brought to a standst for reasons not necessarily attributable to the turboset. The scope inspection is then governed mainly by the observations made duri operation.

- deliberate measures depending on the operating observations
- examination of the safety devices on turbine and generator
- spot checks of control elements and systems.

ASEA BROWN BOVERI

ABB ENERGIE NV

b) Minor overhauls (M), duration : about 2 weeks

These are planned and prepared overhauls, having the following scope :

- opening of turbine casing, if necessary
- visual inspection of the LP last stage blades
- endoscopic examination of accessible parts of the turbine and th generator
- inspection of the bearings
- check of coupling concentricity and shaft alignment
- examination of the safety devices for turbine and generator
- overhaul of the turbine control system, oil pumps etc.
- inspection of the steam valves
- examination of the condensing system, if any
- visual inspection of the stator end windings, their bus bars a terminals, if this is possible without extensive disassembly work. T generator rotor is not dismantled.
- checking of excitation equipment.

See the individual overhaul plans for further information.

It may possibly be necessary to extend the scope of overhaul in the light operational observations and discussions held.

ASEA BROWN BOVERI

ABB ENERGIE NV

c) Major overhauls (G), duration : about 4 weeks

Such overhauls are comprehensive examinations of the entire plant an include mainly the following work, related to the turboset :

- all checks and examinations made already during a minor overhaul
- opening of the turbine casing
- examination of the blading
- complete examination of the couplings, including radial and axial ru out test and alignment figures.
- take-out and examination of the generator rotor
- inspection of the entire stator winding (end winding support, sl wedging, banding, bus bars, terminals)
- examination of the entire stator core for strength and damage
- disassembly and inspection of the excitation equipment.

See the individual overhaul plans for further information.

It may possibly be necessary to extend the scope of overhaul in the light operational observations and discussions held.

ASEA BROWN BOVERI

ABB ENERGIE NV

1.3 Timing of overhauls

The time at which the first overhaul should be performed and at wha interval subsequent overhauls should follow is largely determined by th number of operating hours, the mode of operation and the number of start performed by the turboset. These influence the wear of parts of the set an its auxiliaries and contribute to fatigue of the individual materials. Up t about 100 000 hours of operation, material fatigue is relatively insignifican

The influence of the mode of operation on wear is expressed by the followir equation giving the equivalent operating time T_e :

$$T_e = T_{eff} + n_s \cdot T_s$$

where :

T_e	=	equivalent operating hours
T_{eff}	=	effective operating hours
n_s	=	number of starts
T_s	=	operating hours charged for one start

For ATPS type steam turbosets, 20 - 30 hours may be inserted for T_s.

ASEA BROWN BOVERI

ABB ENERGIE NV

The starts are included in the equivalent operating time of each turbogrou because of the specific stresses to which every turbine is subject durin startup and shutdown. This includes :

- Expansion and friction effects (for example on generator winding an insulation) due to pressure, temperature and centrifugal force cycle
- Specific vibration stresses when passing through the natural frequen ranges of the different machine components.
- Material fatigue, especially of the rotating components, caused l centrifugal force cycles.

The equivalent operating time is a measure of the wear of individu components and serves as a basis for the specification of the interval betwe overhauls. For this it is usual to assume normal operating conditions.

If irregularities occur in operation, the timing of the next overhaul will ha to be adapted to suit the requirements; it may even be advisable to perfo immediate checks.

Owing to the inherent differences in design between turbines and generat the optimal timing of overhauls for the two does not always coincidence. l economical reasons, though, it is common practice for overhauls on turbi and generators to be performed at the same time.

ASEA BROWN BOVERI

ABB ENERGIE NV

For the complete turboset we recommend the intervals mentioned ir paragraph 1.6.

The timing of the first major overhaul of the generator takes into accoun above all the state-of-the-art of the generator regarding the end windin; fixation and the slot wedges.

The synthetic and insulation material used in the generator tends to flo\ (creep) if exposed to pressure and temperature, this particularly during th first time after commissioning. The resultant settling and loosening can b corrected during the first minor and especially the first major overhaul.

At the end of an equivalent operating time of about 100.000 hours, th expected remaining lifetime of "critical" components shall be calculated. Th intervals for further overhauls are then specified in accordance with th calculations and results of the overhaul.

ASEA BROWN BOVERI

ABB ENERGIE NV

1.4 Planning recommendations for overhauls

About 12 months before a major overhaul is due to start, the operator is wel advised to contact the manufac-turer, possibly the insurance company too and, taking into consideration his observations and the applicable regulation of the insurance, shall agree on the timing and kind of overhaul to b performed, and its duration.

The following points have to be considered :

- Scope of overhaul :
With the aid of the operator's operational observations and the overha plans and experience of the manufacturer, the scope of the overhaul must b specified.

- Spare parts requirements :
In accordance with the scope of overhaul, it is possible to specify the spa parts likely to be needed.

- Stock of spare parts :
With respect to the demand, the operator's stock of spare parts should checked for completeness and condition. Essential spare parts should procured well in advance.

- Tools and fixtures :
Examine whether the necessary tools and fixtures are in the operat possession or whether they have to be provided by the manufacturer, example.

- Personnel duty roster :
The operator and manufacturer jointly draw up a personnel duty roster. inspections and assembly work shall be performed by trained personne

ASEA BROWN BOVERI

ABB ENERGIE NV

- **Working plan :**

A working plan has to be drawn up, stipulating what jobs are performed i the operator's workshops and which in the manufacturer's premises.

- **Capacity planning :**

The operator and, if necessary, the manufacturer should ensure that th requisite workshop and machine capacities are available at the time require

Well in advance of the start of the overhaul, the "actual state" of the turbos should be determined by carrying out check measurements (e.g. pressu curves, vibration, loss of vacuum, displacement of foundations, temperatu rise of the generator, etc.) and be compared with the original conditi (specified condition).

The results of the check measurements permit a better diagnosis and are be taken into consideration when planning the overhaul.

For the overall coordination of an overhaul it is advisable to prepare schedule (bar chart, critical path diagram). Here it should be borne in m that quick dismantling enables an early inspection to be carried out, findings of which may permit unforeseen work to be performed within planned shutdown period.

ASEA BROWN BOVERI

ABB ENERGIE NV

1.5. Spare parts management

Well balanced spare parts management has an essential effect on the reduction of planned and unplanned outage times and thus increases the availability of a plant.

Which components or parts shall be stored as spare parts is largel determined by their

- failure probability
- procurement time
- repair time.

Available spare parts can reduce considerably the duration of an overhau

In accordance with these criteria, a distinction is made between necessa spare parts which should be available at customer's stock even commissioning of the plant, and other spare parts whose storage recommended from a long term view point.

ABB establishes individual spare parts recommendations for all the plai These recommendations take into account the above mentioned view poi and represent an optimal utilization of the investments for the client. For details, see added spare parts list.
(Chapter I, Section I.9.1)

ASEA BROWN BOVERI

ABB ENERGIE NV

1.6 Sequence and timing of overhauls

Turbine overhaul	Generator overhaul	Date determined by : T_e *	Years of op.**
1st minor overhaul	1st minor overhaul	8'000- 12'000	max. 4
2nd minor overhaul	1st major overhaul	22'000- 28'000	max. 8
1st major overhaul	2nd major overhaul	47'000- 53'000	max. 15
3rd minor overhaul	2nd minor overhaul	72'000- 78'000	max. 20
2nd major overhaul	3rd major overhaul	97'000-103'000	max. 25

See also figure on next page.

* = Evaluated operating hours (=equivalent operating hours T_e)

** = Years of installation since commissioning

OVERHAULS OF TURBINE AND GENERATOR

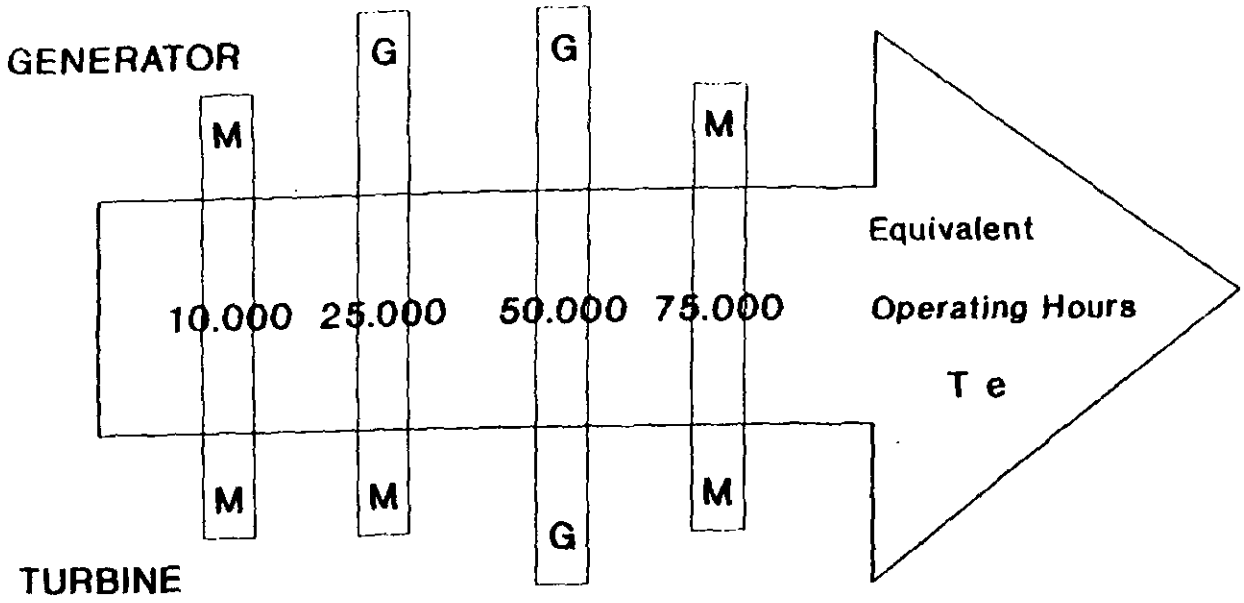

G = Major overhaul

M = Minor overhaul

Te = Teff + ne.Te
Te = equivalent operating hours
Teff = effective operating hours
Te = equiv. operating hours of one start
Ne = number of starts

M15 MITSUBISHI STEAM TURBINE GENERATOR

3. PERIODICAL INSPECTION FOR MAINTENANCE

It is very important that the turbine can readily be started in an emergency.
To do so maintain the unused turbine unit in the same manner as operating turbine.
Since however, it is very difficult to keep the unused turbine unit in exactly the same condition as the operating turbine, it is desirable to operate and stop the turbine alternately. By so doing, provide the maintenance as follows.

The maintenance shall follow the vendor's manual basically for reduction gear, oil pump, LO cooler, oil reservior and oil strainer.

STANDARD OF PERIODICAL INSPECTION FOR MAINTENANCE

Period	Inspection item	Inspection standard	Maintenance requirement
Every start-up & stop	Turbine in general	Perform operating of drain valve and other valves	Check their working condition
3 months	Emergency trip device and governing device	Operate both devices and check their conditions	Re-adjustment, refer to "INSTRUCTION BOOK"
6 months	Grease nipple	Pour the grease at following points. (1) Steam control valve linkage (2) Bearing pedestal sliding part.	Recommended brand Shell: Stamina EP-2 Eneos: Pironoc CC Cosmo: UREA 2 Mobil: Pegalube SE Esso: Grease UH-1
1st time 2 years 2nd time & after 4 years	Casing inside and every packings	Check the condition of the casing inside blades and shrouds. Examine the degree of wear of every packing.	(1) Clean the casing inside and the horizontal joint. (2) Clean the blades, nozzles and shrouds. (3) Replace the packing fin with a spare if it found wear.

Period	Inspection item	Inspection standard	Maintenance requirement
Ditto	Main steam stop valve and main steam control valve	Check the condition of valves and valve seats and of their installed parts. Check the crack and valve contact.	Operate opening and closing of valves. If there is looseness or leakage, such defect should be reconditioned for smooth valve operation.
Ditto	Bolts and nuts, and split pins	Examine the connection part condition of turbine casing, reduction gear casing, pedestals and oher connecting parts.	(1) Any bolts and nuts found loosened should be securely installed (2) Make sure that split pins are securely installed. (3) Corroded bolts and nuts, split pins should be reconditioned or replaced.
Ditto	Valves	Check the conditions of the valves and valve seats, and their installed parts.	Operate opening and closing of valves. If there is looseness or leakage, such defect should be reconditioned for smooth valve operation.
Ditto	Reduction gear	(1) Check the tooth surface of the reduction gear and theitr contact (2) Examine the oil sprays for clogging.	(1) Recondition the tooth surface for rust, scratches and burrs. (2) Clean the sprays.

Period	Inspection item	Inspection standard	Maintenance requirement
2 years	Journal bearings and thrust bearings	Check the white metals of the journal bearing and the thrust bearing for wear and their contact.	Correct the journal bearing contact and thrust bearing contact and adjust the clearance with each shaft.
4 years	Oil pumps	(1) Check the gear and bearing for wear. (2) Check the operation of other devices	(1) Recondition the gear tooth surfaces for scratches and burrs. (2) Repair every connecting part and rubbing part and make sure that split pins and set screws are securely applied.
8 years (6 months for cooling water side)	L.O. cooler	Inspect the condition of cooler and check the leakage by hydraulic test.	Clean the oil cooler and place with a spare, in case where it has severely depleted.
2 years	Oil reservoir	Inspect inside coating and clean up.	
1st time 6 months 2nd time & after 1 year	Duplex type oil strainer	Overhaul and clean up.	

SEBU6121-02
July 1989

CATERPILLAR®

Operation & Maintenance Manual

3606 and 3608 Industrial, EPG and Marine Engines

8RB306-UP
6MC247-UP

Top End Overhaul

This maintenance interval is labeled TOP END OVERHAUL, because it involves removal, inspection and rework of the cylinder head components. This maintenance interval is dependent on load-sensitive items.

Schedule all 3606 Engines for a TOP END overhaul Every 5 500 000 Liters (1,500,000 U.S. Gallons) of fuel or 20,000 Service Hours, Whichever Occurs First.

Schedule all 3608 Engines for a TOP END overhaul Every 7 500 000 Liters (2,000,000 U.S. Gallons) of fuel or 20,000 Service Hours, Whichever Occurs First.

A top end overhaul is generally indicated by increased fuel consumption and reduced power. This option consists of completely reconditioning your cylinder heads. The cylinder components are usually not worn enough to need repair.

Refer to the Service Manual for disassembly and assembly procedures to perform the required maintenance as shown in the Maintenance Management Schedule or contact your Caterpillar dealer for assistance.

Refer to the "Index of Publications On Reusability Or Salvage of Used Parts" section of the "Guideline For Reusable Parts and Salvage Operations," Form SEBF8029 to determine the reusability publications needed for inspecting your parts.

The "Guideline For Reusable Parts and Salvage Operations," is part of an established Caterpillar parts reusability program. These guidelines were developed to assist Caterpillar dealers and customers reduce costs by avoiding unnecessary expenditures for new parts when existing parts can be used as is, repaired or salvaged.

If your parts comply with the established visual, dimensional, etc., inspection specifications expressed in the reusable parts guideline, then they should be reused.

NOTE: Parts complying within the specifications outlined in the reusable part guideline will give an additional service life.

If your parts are not within specification, then they should be salvaged, repaired, replaced or exchanged. Failure to salvage, repair, replace or exchange out-of-spec parts will result in unscheduled downtime and could result in costly repairs caused by potential damage to other engine parts. Out-of-spec parts can also contribute to increased fuel consumption and reduction of engine efficiency. Follow the maintenance requirements for this maintenance interval, using the "Guideline for Reusable Parts and Salvage Operations" as a guideline for parts reusability.

Refer to the Service Manual for all disassembly and assembly procedures to perform the required maintenance on the items listed, or contact your Caterpillar dealer for assistance.

Your Caterpillar dealer can provide you with the necessary parts to rebuild your engine at the least possible cost. There may be options available such as the Remanufactured Core Program as well as individual parts for Top End parts replacement.

Top End Overhaul

Remanufacture or Rebuild

Cylinder Heads
Unit Injectors
Cylinder Head Intake and Exhaust Inserts
Cylinder Head Inner and Outer Valve Springs
Cylinder Head Valve Spring Guides
Cylinder Head Valve Locks
Cylinder Head Valve Rotocoils
Cylinder Head Intake Valves
Cylinder Head Exhaust Valves
Cylinder Head Dowels
Grind Valves and Seats (If not replaced)
Lap Valves and Seats (for full face contact)

Replace

Cylinder Head Gaskets, Seals, O-Ring Seals and Plugs
Turbocharger Bearings, Bushings and Seals
Oil Pump Bushings and Seals
Fuel Transfer Pump Seals
Oil Cooler Seals and Regulators
Inlet and Outlet Water Temperature Regulators and Seals
Oil Temperature Regulators and Seals
Exhaust Manifold Gaskets
Thermocouples (If Equipped)
Exhaust Shields
Intake Air Lines Seals
Valve Lubricator Pump (If Equipped)

Clean

Oil Cooler Core

Inspect/Replace

Starter Brushes
Thrust Bearings (except Crankshaft)
Water Pump Idler Gear Bearings
Camshaft Idler Gear Bearings

Overhaul

The overhaul column in the Maintenance Management Schedules give Caterpillar's recommendation for doing an overhaul. The interval is expressed in total amount of fuel consumed as well as Service Hours, Whichever Occurs First. The best figure to use is total fuel consumed, *even if this figure is estimated.* Fuel consumption more closely follows the load upon the engine.

The hours figure is an average value for a reasonable load factor. The hours figure will be too high if the engine is run at high load and too low if the engine is lightly loaded.

Use the *fuel consumption or service hour figure* only as a guideline. Other factors, such as how conscientiously preventive maintenance has been performed, fuel quality, operating conditions, S•O•S results, etc., are important in deciding when to perform an overhaul, as well as some important economic points to keep in mind.

To minimize downtime and provide you with the lowest cost and highest value.

Caterpillar recommends that all 3606 and 3608 engines be overhauled before failure by scheduling an overhaul.

Schedule all 3606 Engines for overhaul every 11 000 000 liters (3,000,000 U.S. gallons) of fuel or 40,000 Service Hours, whichever occurs first.

Schedule all 3608 Engines for overhaul every 15 000 000 liters (4,000,000 U.S. gallons) of fuel or 40,000 Service Hours, whichever occurs first.

The "Guidelines For Reusable Parts and Salvage Operations" is part of an established Caterpillar parts reusability program. These guidelines were developed to assist Caterpillar dealers and customers to reduce costs by avoiding unnecessary expenditures for new parts when *existing parts can be used as is, repaired or* salvaged.

If your parts comply with the established visual, dimensional, etc., inspection specifications expressed in the reusable parts guideline, then they should be reused.

NOTE: Parts complying with the specifications *outlined in the reusable parts guideline will give an* additional service life to the next overhaul without decreasing engine performance.

Refer to the Service Manual for the disassembly and assembly procedures to perform the required maintenance as shown in the maintenance management schedule or contact your Caterpillar dealer for assistance.

Your Caterpillar dealer can provide you with the necessary parts to rebuild your engine at the least possible cost. There may be options available such as the Remanufactured Core Program as well as individual parts for Top End parts replacement.

Overhaul

Replace

Piston Rings
Connecting Rod Bearings
Main Bearings
Camshaft Bearings
Rocker Arm Bearings
Injectors
Aftercooler Core
Accessory Group Bearings
Front Gear Train Bearings
Rear Gear Train Bearings
Cylinder Head Valves
Cylinder Head Valve Guides
Cylinder Head Valve Spring Guides
Exhaust Manifold Seals
Exhaust Manifold Bellows
Exhaust Shields
Intake Air Lines Seals
Inlet Water Temperature Regulators and Seals
Outlet Water Temperature Regulators and Seals
Oil Temperature Regulators and Seals
Fuel Rack Bearings
3161 Governor

Rebuild

Vibration Damper Bearings
Centrifugal Filter Bearings
Starters
Cylinder Head
Woodward Actuator

Inspect

Pistons
Piston Rods
Cylinder Liners
Crankshaft
Camshafts
Front Gear Group
Rear Gear Group
Exhaust Manifolds
Shutoff Controls and Alarms
Priority Valve

Clean

Oil Cooler
Lube Oil Suction Screen

Replace Gaskets and Seals

Crankcase Side Cover Group
Central Structure Cover Group
Camshaft Front Cover Group
Camshaft Drive Gear Cover Group
Front Housing Group
Gear Inspection Group
Rear Housing Group
Rear Structure Cover Group
Power Take-Off Cover Group
Priority Valve Group
Crankshaft
Valve Mech. Cover Group
Oil Lines
All Water Lines
Oil Cooler
Vibration Damper
Fuel Lines

3600 INDUSTRIAL and EPG DIESEL ENGINES

NOTE: For 3600 Industrial and EPG Engines, refer to Caterpillar Operation and Maintenance Manual SEBU6121 for serial numbers 8RB305-UP, 6MC247-UP, and SEBU6122 for serial numbers 9RC18-UP and 1PD19-UP for more complete and detailed information.

Maintenance Schedule

Daily

Engine Crankcase – Check oil level 1
Cooling System – Check coolant level 2
Woodward EGB29P Actuator Oil (If Equipped) – Check level 3
Air Starter Lubricator – Check oil level clean bowl and adjust feed 4
Air Starter Screen – Clean 4
Air Filter, Oil Filter and Fuel Filter Differential Pressure – Check gauges 5
Prelube Pump Lubricator – Check oil level clean bowl and adjust feed 6
Fuel Tank (Day Tank If Equipped)– Drain water and sediment 7
Walk-Around Inspection – Check engine ..... **
Air Tank – Drain water and sediment ..... **
Driven Equipment – Refer to OEM for maintenance recommendations ..... **

Every 100 Service Hours (See Chart 1)*

Turbocharger (When Using Heavy Fuels) – Wash ... 8

Every 250 Service Hours (See Chart 1)*

Scheduled Oil Sampling S·O·S – Obtain 9
Cooling System – Test/Add Supplemental Coolant Additive 10

Every 1000 Service Hours (See Chart 1)*

Valve Lash, Valve Bridge, Injector Timing and Injector Synchronization (At Initial 1000 Hours Only) – Check/Adjust 11
Crankcase Breather – Clean 12
Centrifugal Oil Filter – Clean and inspect bearing .. 13
Oil Filters – Change 14
Fuel Filters – Change 15
Manual Barring Device – Lubricate 16
Electric Prelube Pump (If Equipped) – Lubricate 17
Flywheel Ring Gear – Lubricate 18
Shutoff Controls and Alarms – Inspect/Check ..... **

CHART 1 – SERVICE HOURS/FUEL CONSUMPTION		
Service Hours	**3606**	**3608**
100 Hours or	28 400 L (7500 gal)	37 500 L (10,000 gal)
250 Hours or	71 000 L (18,750 gal)	94 000 L (25,000 gal)
1000 Hours or	284 000 L (75,000 gal)	375 000 L (100,000 gal)
2000 Hours or	568 000 L (150,000 gal)	750 000 L (200,000 gal)
3000 Hours or	853 000 L (225,000 gal)	1 137 000 L (300,000 gal)
6000 Hours or	1 705 000 L (450,000 gal)	2 274 000 L (600,000 gal)
7500 Hours or	2 130 000 L (562,500 gal)	2 800 000 L (750,000 gal)
T/E OVERHAUL 20,000 Hours or	5 500 000 L (1,500,000 gal)	7 500 000 L (2,000,000 gal)
OVERHAUL 40,000 Hours or	11 000 000 L (3,000,000 gal)	15 000 000 L (4,000,000 gal)
Service Hours	**3612**	**3616**
100 Hours or	56 800 L (15,000 gal)	76 000 L (20,000 gal)
250 Hours or	142 000 L (37,500 gal)	190 000 L (50,000 gal)
1000 Hours or	568 000 L (150,000 gal)	760 000 L (200,000 gal)
2000 Hours or	1 136 000 L (300,000 gal)	1 520 000 L (400,000 gal)
3000 Hours or	1 705 500 L (450,000 gal)	2 274 000 L (600,000 gal)
6000 Hours or	3 411 000 L (900,000 gal)	4 548 000 L (1,200,000 gal)
7500 Hours or	4 260 000 L (1,125,500 gal)	5 700 000 L (1,500,000 gal)
T/E OVERHAUL 20,000 Hours or	11 000 000 L (3,000,000 gal)	15 000 000 L (4,000,000 gal)
OVERHAUL 40,000 Hours or	23 000 000 L (6,000,000 gal)	30 000 000 L (8,000,000 gal)

Lubricant Viscosities

LUBRICANT VISCOSITIES† FOR TEMPERATURE RANGES °C AND °F					
Compartment or System	Oil Viscosities	°C		°F	
		Min	Max	Min	Max
Engine Crankcase	SAE 15W40	–15	+40	+5	+104
	SAE 20W40	–10	+40	+14	+104

Antifreeze

Use Caterpillar Antifreeze or ASTM D4985-89 (GM Specification 6038-M) Antifreeze.
Only use a greater concentration (above 30%) of Caterpillar Antifreeze as needed for anticipated outside (ambient) temperatures.

ANTIFREEZE CONCENTRATIONS	
Protection Temperature	**Concentration**
Protection to –15°C (5°F)	30% antifreeze and 70% water
Protection to –23°C (–10°F)	40% antifreeze and 60% water
Protection to –37°C (–34°F)	50% antifreeze and 50% water
Protection to –51°C (–60°F)	60% antifreeze and 40% water

Supplemental Coolant Additive

Supplemental coolant additive is necessary to prevent rust, scale, pitting and/or corrosion of engine parts that coolant comes in contact with.

NOTE: If other than Caterpillar products are used as the supplemental coolant additive, follow the manufacturers' recommendation for cooling system treatment and test evaluation.

DO NOT mix Caterpillar Supplemental Coolant Additive or supplemental coolant additive elements with the other products available; select a cooling system treatment and use it exclusively.

Liquid supplemental coolant additive can be purchased from your Caterpillar dealer.

Fuel Specifications

Fuel Types

Caterpillar Diesel Engines are cap
wide range of distillate fuels. The
blends of distillate fuel which mee
requirements will provide quality e

For more information on fuel selec
properties, refer to "Diesel Fuels a
form SEBD0717 or consult your C
Refer to "Fuel Recommendations
Engines," form SEHS7067, for a c
preferred and permissible fuels a

Lubricant Specificatic

003
MAUI ELECTRIC MOLO
08/08/2007 10:22 FAX 808 553 5918

CA-IR-81
DOCKET NO. 2006-0387
ATTACHMENT 2
PAGE 80 OF 81

Air Filters – Inspect/Check ..... **
Fuel Sample - Obtain ..... **
Coolant Sample – Obtain ..... **
Primary Fuel Filters – Drain Water ..... **

Every 2000 Service Hours (See Chart 1)*
Valve Lash, Valve Bridge, Injector Timing and Injector Synchronization – Check/Adjust ..... **

Every 3000 Service Hours (See Chart 1)*
Cooling System - Clean/Flush 19

Every 6000 Service Hours (See Chart 1)*
Water Temperature Regulators (Thermostats) – Replace ..... **
Oil Temperature Regulators (Thermostats) – Replace ..... **

Every 7500 Service Hours (See Chart 1)*
Water Pump – Inspect/Replace seals ..... **
Fuel Transfer Pump – Inspect/Replace seals ..... **
Crankshaft – Inspect/Replace seals ..... **
Prelube Pump – Inspect/Replace brushes ..... **
Exhaust Shield – Inspect/Replace ..... **
Damper – Inspect for leakage ..... **
Woodward EGB29P Actuator Oil (If Equipped) – Replace ..... **
Woodward EGB29P Actuator Operation (If Equipped) – Check for proper operation (Reference SEBD9122) ..... **

TOP END OVERHAUL
20,000 Service Hours (See Chart 1)*
Top End Overhaul Items – ..... **

OVERHAUL
40,000 Service Hours (See Chart 1)*
Overhaul Items – ..... **

*First Perform Previous Service Hour Items

**Consult your Operation & Maintenance Manual for exact location of these items. (These items not shown on reverse side.)

SELD6121 (11-90) Printed in U.S.A.

[1] The primary recommendation for the 3600 engine is an SAE 40 grade oil. SAE 30 grade and multi-grade oils can be used according to the chart above.

Refill Capacities

Compartment or System	Liters	U.S. Gal.	Imperial Gal.
ENGINE CRANKCASE Refill with Filter Change			
3606 Engine	1049	277	231
3608 Engine	1291	341	289
3612 With Shallow Oil Pan	1142	302	251
3612 With Standard Oil Pan	1465	387	322
3616 With Standard Oil Pan	1833	484	403
COOLING SYSTEM			
3606 Engine Only	400	104	87
3606 Accessory Module Only	345	91	76
3606 Total Capacity	745	195	163
3608 Engine Only	530	138	115
3608 Accessory Module Only	345	91	76
3608 Total Capacity	875	229	191
3612 Engine Only	800	211	176
3612 Accessory Module Only	345	91	76
3612 Total Capacity	1145	302	252
3616 Engine Only	1060	280	233
3616 Accessory Module Only	345	91	76
3616 Total Capacity	1405	371	309

Cooling System Specifications

Coolant Information

Caterpillar prefers the use of distilled water or deionized water to reduce the potential and severity of chemical insolubility. Refer to "Coolant and Your Engine" form SEBD0970, for more detailed specifications.

MINIMUM ACCEPTABLE WATER	
Water Content	Limits gr/gal (ppm)
Chlorides	2.4 (40) maximum
Sulfates	5.9 (100) maximum
Total Hardness	10 (170) maximum
Total Solids	20 (340) maximum
pH	5.5 to 9.0

ppm = parts per million

type of fuel used. For initial application of the engine, the recommended lubrication oil for use with distillate diesel fuel with less than 1% sulfur is SAE 40 DEO (Diesel Engine Oil) with Total Base Number (TBN) 12 and 1.4% Ash level minimum.

Diesel Engine Oil

• Cat Diesel Engine Oil (DEO)
Caterpillar has had experience with Cat Diesel Engine Oil, which is specially formulated for Caterpillar Diesel Engines to reduce piston and ring deposits and thus provide longer engine life and stable oil control.

Alternate Oils

If an oil other than Cat DEO is to be used, use the following guideline:

- API specifications CE, CD and CD2 are acceptable providing they pass the deposit formation test.
- API CC is NOT acceptable for use in the 3600 Series engine.

Oil with these specifications may require shortened oil change periods as determined by close monitoring of oil condition with Scheduled Oil Sampling (S•O•S) and infrared analysis.

Air Starter Lubricator Oil and Air Prelube Pump Lubricator Oil

Diesel fuel or kerosene may be substituted for air starter lubricating oil.

Scheduled Oil Sampling (S•O•S)

S•O•S Analysis

S•O•S is composed of three basic tests:

- Wear Analysis
- Chemical and Physical Tests
- Oil Condition Analysis

Obtain S•O•S samples at r
to monitor the condition anc
of your engine. Consult you
complete information and as
S•O•S program for your en

NOTE: Infrared analysis mu
change intervals. S•O•S mu
the analysis.

06/08/2007 10:22 FAX 808 553 5918 MAUI ELECTRIC MOLO 002

CA-IR-81
DOCKET NO. 2006-0387
ATTACHMENT 2
PAGE 81 OF 81

CA-IR-90

Ref: MECO-WP-508, (Production Materials Inventory).

a. Please provide updated monthly actual inventory balances by location for all available months of 2006 and 2007, to date.
b. Does MECO conduct periodic physical inventories of production materials to verify recorded amounts?
c. Please provide a summary of physical inventories at each location and provide copies of journal entries recording the results of such inventory work.
d. Are any production department inventory materials obsolete or unusable?
e. If your response to part (d) of this information request is affirmative, provide an itemized listing of the carrying cost of obsolete or unusable materials by location for the test year.
f. Explain and itemize the individually large purchases that comprise the projected increases in inventory at Maalaea Power Plant (See WP-508, page 2 in 2007).

MECO Response:

a. Please refer to CA-IR-90 Attachment 1 for an updated monthly actual inventory balances by location for all available months of 2006 and 2007, to April. In addition, the June 2007 update includes an updated MECO-WP-508, Production Materials Inventory with the remaining months' test year estimates.

b. To ensure the accuracy of inventory balances and to ensure obsolete or slow moving inventory are written off in a timely manner, the warehouse personnel perform "cycle counts". A "cycle count" is similar to a physical inventory count, except that the entire inventory for each warehouse is not counted.

Ellipse determines the items to be cycle counted based on the dollar frequency of materials turnover. The frequency of how often a stock item is to be counted is determined by an ABC classification. A classification of A would be more frequent then B and B more than C. The A classification has the highest dollar value of inventory turn, C the lowest, and B in the middle.

Ellipse cycle counting parameters at both MPP and KPP are set to automatically run the Stock Take Count Sheets either daily or weekly showing the cycle count date, location, run number, date and time printed as well as stock numbers and bin locations of materials to be counted. The Ellipse system generates a unique run number to identify the respective cycle count based on pre-established parameters.

The Kahului Power Plant (KPP) warehouse performs cycle counts on a weekly basis and the Maalaea Power Plant (MPP) warehouse on a daily (Monday-Friday) basis. The Lanai and Molokai Power Plants perform an annual physical inventory.

c. The summaries of physical inventories at each warehouse locations are provided in both Excel and PDF files (see CA-IR-90 Attachments 2 through 5). Please refer to CA-IR-90 Attachment 6 for copies of journal entries recording the results of periodic physical inventories for 2006 and 2007, to date.

d. Yes.

e. Please refer to CA-IR-90 Attachment 7 for an itemized listing of the carrying cost of obsolete or unusable materials at the MPP warehouse for the test year.

f. Spare parts for M18 were included as part of the 2007 forecast for MPP materials inventory. However, spare parts for M18 were included in the capital cost for M18 at a total cost of $235,000, rather than in materials inventory. Other detailed information regarding the calculation of the 2007 estimates of MPP materials inventory is not available due to retirement of the staff member who prepared the estimates.

Maui Electric Company, Limited

MATERIALS PHYSICAL INVENTORY
MAALAEA POWER PLANT

WH	STOCK CODE	Item	Description	SOH	Unit	Price/ Unit	Total Cost/ Item
MPP	000000026	SEAL	MECHANICAL, TUTHILL PUMP	4.00	EA	36.32	145.26
MPP	000113704	STRAP, TIE. .30 X 13.43", BLACK. NYLON	WITH SS BARB MOUNTED IN HEAD	250.00	EA	0.62	155.80
MPP	000113829	STRAP, TIE, NYLON, 7.31" LONG, SELF	LOCKING, OUTDOOR USE	10.00	EA	18.40	184.00
MPP	000156448	BLOCK, CONTACT, HD OILTIGHT, 600 VOLTS	MAX AC, WITHOUT MOUNTING PLATE	4.00	EA	34.77	139.07
MPP	000165068	PEN, FELT, RED	FOR YOKOGAWA RECORDER MR1000, MODEL	6.00	PG	0.00	0.00
MPP	000165084	PEN, FELT, GREEN	FOR YOKOGAWA RECORDER MR1000, MODEL	6.00	PG	0.00	0.00
MPP	000165100	PEN, PLOTTER	FOR YOKOGAWA RECORDER MR1000, MODEL	12.00	PG	9.83	117.93
MPP	000165142	PEN, FELT, BLUE	FOR YOKOGAWA RECORDER MR1800, MODEL	6.00	PG	0.00	0.00
MPP	000165167	PEN, FELT, VIOLET	FOR YOKOGAWA RECORDER MR1800, MODEL	5.00	PG	0.00	0.00
MPP	000177147	RECEIVER, ELECTRONIC, GAITRONIC	INCLUDES: HANDSET, SPEAKER AMP WITH PUSH	2.00	EA	490.95	981.91
MPP	000178571	ASSEMBLY, PHOTOCELL, S5000	FOR HACH CO. SILICA ANALYZER MODEL 5000.	3.00	EA	157.87	473.62
MPP	000253906	BATTERY, FLASHLIGHT, CARBON, SIZE: D	(USE CODE 254243)	0.00	EA	0.00	0.00
MPP	000254045	FLASHLIGHT, SIZE: 2 CELL	(OBSOLETE - USE CODE 254060)	0.00	EA	0.00	0.00
MPP	000254060	FLASHLIGHT, EXPLOSION PROOF, 3 CELL		0.00	EA	0.00	0.00
MPP	000254201	BATTERY, AA		0.00	EA	0.36	0.00
MPP	000254227	BATTERY, C		0.00	EA	0.67	0.00
MPP	000254243	BATTERY, D		0.00	EA	0.88	0.00
MPP	000254268	BATTERY, 9V	12 PER PACK OR 72 PER BOX	0.00	EA	1.30	0.00
MPP	000260349	TY-RAP, TY523MX	SELF-LOCKING, BLACK, 0.625" WIRE BUNDLE	6.00	PG	12.77	76.62
MPP	000412742	LIQUID FUEL PUMP, MODEL NO. 20257	HIGH PRESSURE FUEL PUMP SYSTEM	1.00	EA	0.00	0.00
MPP	000419705	BEARING SHELL	UPPER/LOWER - MAIN	1.00	ST	297.65	297.65
MPP	000419721	BEARING	THRUST	0.00	ST	1,280.17	0.00
MPP	000419747	KIT	JACKSCREW & WASHER	1.00	KT	456.65	456.65
MPP	000419762	CAPSCREW	MAIN BEARING WITH HYDRAULIC NUT	12.00	EA	4.47	53.64
MPP	000419788	ORING	MAIN BEARING WITH HYDRAULIC NUT	29.00	EA	0.75	21.75
MPP	000419804	LOCKPLATE	MAIN BEARING WITH HYDRAULIC NUT	31.00	EA	0.28	8.70
MPP	000419820	O RING	MAIN BEARING WITH HYDRAULIC NUT	79.00	EA	1.00	78.70
MPP	000419846	GASKET	MAIN BEARING WITH HYDRAULIC NUT	1.00	EA	1.13	1.13
MPP	000419861	PLUG	MAIN BEARING WITH HYDRAULIC NUT	10.00	EA	15.14	151.40
MPP	000419887	SEAL	INSPECTION COVER - PLAIN	22.00	EA	13.45	295.96
MPP	000419903	GASKET	INSPECTION COVER WITH VALVE	32.00	EA	3.26	104.32
MPP	000419929	ORING	INSPECTION COVER WITH VALVE	18.00	EA	12.24	220.32
MPP	000419945	STUD	INSPECTION COVER - WITH VALVE	5.00	EA	8.57	42.86
MPP	000419960	NUT	INSP COVER / VALVE	38.00	EA	2.85	108.30
MPP	000419986	NUT	INSP COVER / PLAIN	15.00	EA	0.29	4.35
MPP	000420000	CLAMP	INSP COVER PLAIN / WITH VALVE	12.00	EA	33.83	405.96
MPP	000420026	GASKET	"O" SECT., 6MM X 44"	5.00	EA	3.50	17.50
MPP	000420042	CAPSCREW	2.00 X 45	1.00	EA	4.35	4.35
MPP	000420067	FITTED BOLT	16-2.00 X 45	2.00	EA	28.42	56.84
MPP	000420083	NUT	16-2.00	1.00	EA	1.54	1.54
MPP	000420109	GASKET	CRANKSHAFT OIL SEAL	5.00	EA	36.75	183.76
MPP	000420125	GASKET	CRANKSHAFT OIL SEAL	3.00	EA	4.46	13.38
MPP	000420141	SEAL	CRANKSHAFT OIL SEAL	2.00	EA	1,242.83	2,485.66
MPP	000420166	PIN	CRANKSHAFT OIL SEAL	1.00	EA	5.37	5.37
MPP	000420182	LOCKPLATE	COUNTER WEIGHT	0.00	EA	4.53	0.00
MPP	000420208	RING	SNAP	6.00	EA	7.00	42.00
MPP	000420224	KEY	3/8 X 3/8 X 1-1/4	2.00	EA	0.59	1.18
MPP	000420240	SEAL RING	TORSIONAL MONITORING DEVICE	3.00	EA	9.00	27.00
MPP	000420265	BEARING	TORSIONAL MONITORING DEVICE	1.00	EA	15.00	15.00
MPP	000420281	SHAFT	TORSIONAL MONITORING DEVICE	1.00	EA	69.09	69.09
MPP	000420307	GASKET	TORSIONAL MONITORING DEVICE	1.00	EA	5.10	5.10
MPP	000420323	GASKET	TORSIONAL MONITORING DEVICE	3.00	EA	15.19	45.57
MPP	000420349	SEAL	COUNTERWEIGHTS	13.00	EA	18.62	242.11
MPP	000420364	ROD	CONNECTING - COMPLETE	0.00	EA	6,758.41	0.00
MPP	000420380	BEARING ASSY	CONNECTING ROD - UPPER/LOWER	34.00	ST	450.14	15,304.75
MPP	000420406	PIN	COTTER, 1/4 X 3	108.00	EA	0.34	36.40
MPP	000420422	CAPSCREW	FREE ASSEMBLY	0.00	EA	198.84	0.00
MPP	000420448	CAPSCREW	FITTED ASSEMBLY	8.00	EA	415.00	3,320.03
MPP	000420463	RING	RETAINING (MAHLE)	13.00	EA	1.74	22.65
MPP	000420489	RING	SEALING (MAHLE)	16.00	EA	141.98	2,271.61

NOTE: SOH - Stock on Hand

Source: DARS 3342 Report (as of 5/31/07)

Maui Electric Company, Limited

MATERIALS PHYSICAL INVENTORY
MAALAEA POWER PLANT

WH	STOCK CODE	Item	Description	SOH	Unit	Price/ Unit	Total Cost/ Item
MPP	000420505	RING	SCRAPPING (MAHLE)	13.00	EA	245.58	3,192.58
MPP	000420521	RING	COMPRESSION (MAHLE)	11.00	EA	51.16	562.81
MPP	000420547	TUBE	PISTON PIN (MAHLE)	2.00	EA	307.79	615.57
MPP	000420562	RING	COMPRESSION, OEM	0.00	ST	44.63	0.00
MPP	000420588	RING	OIL SCRAPER, OEM	0.00	EA	55.02	0.00
MPP	000420604	RING	SEALING, OEM	0.00	EA	107.19	0.00
MPP	000420620	SCREW	SPECIAL LOCATING	6.00	EA	54.23	325.38
MPP	000420646	PIN	FLOATING W/ENCASED TUBE	0.00	EA	3,036.72	0.00
MPP	000420661	BUSHING	CONNECTING ROD PIN	0.00	EA	882.80	0.00
MPP	000420687	PLATE	END	0.00	EA	118.56	0.00
MPP	000420703	PISTON ASSY	MAHLE	0.00	EA	10,250.38	0.00
MPP	000420729	PISTON ASSY	PISTON	0.00	EA	9,686.54	0.00
MPP	000420745	CAPSCREW	PISTON	0.00	EA	17.70	0.00
MPP	000420760	O RING	MAHLE PISTON	23.00	EA	30.97	712.31
MPP	000420786	O RING	PISTON	0.00	EA	16.00	0.00
MPP	000420802	PIN	MAHLE PISTON	3.00	EA	2,132.58	6,397.73
MPP	000420828	ORING	MAHLE PISTON	33.00	EA	3.61	119.20
MPP	000420844	PLATE	LOCKING (PISTON)	0.00	EA	21.69	0.00
MPP	000420869	PLATE	RETAINING PISTON	0.00	EA	48.40	0.00
MPP	000420885	PISTON	MAHLE	2.00	EA	8,574.10	17,148.19
MPP	000420901	GASKET KIT	CYLINDER LINER	0.00	KT	340.39	0.00
MPP	000420927	GASKET	CYLINDER HEAD	36.00	EA	55.82	2,009.52
MPP	000420943	NUT	CYLINDER HEAD	21.00	EA	254.14	5,336.86
MPP	000420968	LINER	CYLINDER	2.00	EA	2,609.25	5,218.49
MPP	000420984	WATER JACKET	CYLINDER	0.00	EA	5,754.61	0.00
MPP	000421008	GASKET	CYLINDER	30.00	EA	2.23	66.77
MPP	000421024	ORING	CYLINDER	89.00	EA	2.77	246.53
MPP	000421040	SEAL	CYLINDER	32.00	EA	17.95	574.39
MPP	000421065	FERRULE	CYLINDER	2.00	EA	233.89	467.78
MPP	000421081	STUD	CYLINDER	1.00	EA	1,020.61	1,020.61
MPP	000421107	ORING	CYLINDER	23.00	EA	36.54	840.31
MPP	000421123	ORING	VULCANIZED CYLINDER	84.00	EA	45.70	3,838.80
MPP	000421149	ORING	CYLINDER	23.00	EA	1.91	43.93
MPP	000421164	CAP PLUG	CYLINDER	79.00	EA	3.33	263.01
MPP	000421180	BUSHING	FLOATING ROCKER ARM	4.00	EA	52.80	211.20
MPP	000421206	PIN	LOCATING R.A., 5/16 X 1-3/4	10.00	EA	17.64	176.38
MPP	000421222	ROLLER	ROCKER ARM, LOWER	7.00	EA	176.65	1,236.55
MPP	000421248	BUSHING	ROCKER ARM, UPPER	5.00	EA	99.49	497.45
MPP	000421263	AXLE	ROLLER ROCKER ARM, LWR	5.00	EA	48.59	242.95
MPP	000421289	BUSHING	ROCKER ARM UPPER	16.00	EA	67.05	1,072.80
MPP	000421305	PIN	TAPER, 6 X 2 ROCKER ARM, UPPER	30.00	EA	4.15	124.50
MPP	000421321	LOCKWASHER	ROCKER ARM, LWR	7.00	EA	0.87	6.09
MPP	000421347	ROD	ROCKER ARM, UPPER	4.00	EA	72.16	288.64
MPP	000421362	PIN	ROCKER ARM, UPPER	12.00	EA	7.61	91.32
MPP	000421388	ROD	ROCKER ARM, UPPER	4.00	EA	92.80	371.20
MPP	000421404	NUT	ROCKER ARM, UPPER, 24 - 3.00	11.00	EA	5.39	59.24
MPP	000421420	LOCKNUT	ROCKER ARM, UPPER, 24-2.50	10.00	EA	14.57	145.70
MPP	000421446	HOUSING	ROLLER GUIDE, R. A., LOWER	1.00	EA	676.49	676.49
MPP	000421461	GUIDE	ROLLER, ROCKER ARM, LOWER	4.00	EA	198.32	793.28
MPP	000421487	SPRING	ROCKER ARM, LOWER	12.00	EA	36.08	432.96
MPP	000421503	ACTUATOR	SPHERICAL	8.00	EA	44.85	358.80
MPP	000421529	SHIELD	PROTECTIVE R.A., LOWER	4.00	EA	36.57	146.28
MPP	000421545	PUSH ROD	ROCKER ARM CONTROL	8.00	EA	292.37	2,338.96
MPP	000421560	ORING	ROCKER ARM, LOWER	144.00	EA	1.25	180.00
MPP	000421586	PLUG	1/8, ROCKER ARM, LOWER	1.00	EA	0.82	0.82
MPP	000421602	PLUG	ROCKER ARM, LOWER	2.00	EA	16.77	33.54
MPP	000421628	ORING	ROCKER ARM, LOWER	10.00	EA	0.44	4.37
MPP	000421644	PIN	ROLLED, 3/8 X 2-1/2	0.00	EA	3.27	0.00
MPP	000421669	VALVE TRAIN	UPPER ASSY	2.00	EA	9,305.00	18,609.99
MPP	000421685	ORING	ROCKER ARM, LOWER	50.00	EA	5.00	250.00
MPP	000421701	PLATE	COVER, R.A., UPPER	10.00	EA	26.95	269.54
MPP	000421727	ORING	VALVE COVER	85.00	EA	1.43	121.55
MPP	000421743	WASHER	VALVE COVER	3.00	EA	8.47	25.41
MPP	000421768	CAPSCREW	VALVE COVER	10.00	EA	144.17	1,441.70
MPP	000421784	NUT	VALVE COVER	2.00	EA	1.21	2.42
MPP	000421800	HANDLE	VALVE COVER	3.00	EA	16.24	48.72
MPP	000421826	HOUSING	VALVE COVER	1.00	EA	876.96	876.96

NOTE: SOH - Stock on Hand

Source: DARS 3342 Report (as of 5/31/07)

Maui Electric Company, Limited

MATERIALS PHYSICAL INVENTORY
MAALAEA POWER PLANT

WH	STOCK CODE	Item	Description	SOH	Unit	Price/ Unit	Total Cost/ Item
MPP	000421842	GASKET	VALVE COVER	40.00	EA	9.24	369.41
MPP	000421867	CAP	TOP ROCKER ARM	27.00	EA	12.59	339.83
MPP	000421883	ORING	VALVE COVER	132.00	EA	2.08	274.56
MPP	000421909	ORING	VALVE COVER	4.00	EA	5.00	20.00
MPP	000421925	ORING	VALVE COVER	2.00	EA	5.00	10.00
MPP	000421941	ORING	VALVE COVER	20.00	EA	1.14	22.88
MPP	000421966	CAM	SPLIT "FUEL" (SPECIAL)	5.00	EA	2,142.40	10,712.01
MPP	000421982	CAM	SPLIT, INTAKE	7.00	EA	1,603.52	11,224.64
MPP	000422006	CAM	SPLIT, EXHAUST	6.00	EA	2,326.55	13,959.30
MPP	000422022	KEY	FUEL CAM	4.00	EA	152.86	611.44
MPP	000422048	KEY	INT/EXH CAM, 230 X 32 X 18	8.00	EA	219.71	1,757.68
MPP	000422063	ORING	CAMSHAFT THRUST	4.00	EA	6.27	25.08
MPP	000422089	BEARING	BALL, CAMSHAFT THRUST(52217)	9.00	EA	260.00	2,340.00
MPP	000422105	GASKET	CAMSHAFT THRUST	2.00	EA	90.93	181.86
MPP	000422121	GASKET	CAMSHAFT SUPPLEMENTARY BRG RH.	1.00	EA	16.16	16.16
MPP	000422147	BEARING	INTERIOR - ASSEMBLY (PC. 1, 7, 13)	1.00	EA	1,771.40	1,771.40
MPP	000422162	GASKET	CAMSHAFT COVER	13.00	EA	5.89	76.57
MPP	000422188	GASKET	CAMSHAFT COVER	10.00	EA	0.86	8.63
MPP	000422204	GASKET	CAMSHAFT COVER	8.00	EA	1.12	8.99
MPP	000422220	GASKET	CAMSHAFT COVER	4.00	EA	98.21	392.84
MPP	000422246	GASKET	CAMSHAFT COVER	6.00	EA	81.71	490.26
MPP	000422261	GASKET	CAMSHAFT COVER	4.00	EA	70.08	280.33
MPP	000422287	GASKET	CAMSHAFT COVER	3.00	EA	63.70	191.10
MPP	000422303	CAPSCREW	CAMSHAFT COVER, M12X1.75 X 20MM	132.00	EA	0.78	102.96
MPP	000422329	ORING	CAMSHAFT GEAR	10.00	EA	24.53	245.34
MPP	000422345	ORING	CAMSHAFT GEAR	4.00	EA	6.99	27.96
MPP	000422360	SWITCH	(ELECTRONIC, SPEED)	1.00	EA	329.00	329.00
MPP	000422386	GENERATOR	DC ELECT. TACHOMETER	3.00	EA	1,148.00	3,444.01
MPP	000422402	GASKET	ELECTRICAL TACHOMETER DRIVE	0.00	EA	7.68	0.00
MPP	000422428	ORING	AIR START, #50 (5.33 X 117.98)	13.00	EA	1.72	22.41
MPP	000422444	ORING	AIR START, #73 (6.99 X 216.55)	13.00	EA	7.66	99.54
MPP	000422469	COUPLING	ROCKER LUBE PUMP DRIVE	1.00	EA	231.52	231.52
MPP	000422485	PIN	ROLLED SPRING, 1/4 X 1-1/8	3.00	EA	1.04	3.12
MPP	000422501	BLOCK	ZINC	10.00	EA	54.09	540.93
MPP	000422527	NUT	HEX	5.00	EA	1.42	7.10
MPP	000422543	PIN	COTTER	47.00	EA	1.88	88.48
MPP	000422545	WASHER, LOCK	FOR SYLINDER HEAD (006-010)	49.00	EA	0.00	0.00
MPP	000422568	STUD	CYLINDER HEAD	13.00	EA	3.31	43.03
MPP	000422584	HEAD	CYLINDER (REBUILD)	0.00	EA	5,315.71	0.00
MPP	000422600	STUD	CYLINDER HEAD	3.00	EA	22.66	67.98
MPP	000422626	NUT	HEX	0.00	EA	1.32	0.00
MPP	000422642	STUD	CYLINDER HEAD	11.00	EA	25.45	279.95
MPP	000422667	NUT	HEX	4.00	EA	24.22	96.88
MPP	000422683	WASHER	BELLEVILLE	157.00	EA	9.90	1,554.43
MPP	000422709	HEAD ASSY	CYLINDER (ASSY W/ VALVE)	0.00	EA	8,771.57	0.00
MPP	000422725	GASKET KIT	CYLINDER HEAD	13.00	KT	201.26	2,616.32
MPP	000422741	GASKET	CYLINDER HEAD	99.00	EA	1.61	159.88
MPP	000422766	GASKET	CYLINDER HEAD	79.00	EA	2.07	163.70
MPP	000422782	GASKET	CYLINDER HEAD	26.00	EA	1.63	42.37
MPP	000422808	GASKET	CYLINDER HEAD	176.00	EA	0.32	56.74
MPP	000422824	GASKET	CYLINDER HEAD	62.00	EA	4.27	264.47
MPP	000422840	GASKET	CYLINDER HEAD	22.00	EA	9.30	204.61
MPP	000422865	GASKET	CYLINDER HEAD	23.00	EA	2.82	64.97
MPP	000422881	PLUG	CYLINDER HEAD	10.00	EA	43.50	435.00
MPP	000422907	GASKET	JOINT, INTAKE & EXHAUST	0.00	EA	0.70	0.00
MPP	000422923	JUMPER	WATER, INTAKE & EXHAUST	10.00	EA	33.36	333.60
MPP	000422949	ORING	INTAKE & EXHAUST	101.00	EA	7.36	742.86
MPP	000422964	ORING	INTAKE & EXHAUST	55.00	EA	1.22	66.93
MPP	000422980	KEEPER	VALVE, INTAKE & EXHAUST	8.00	EA	129.06	1,032.48
MPP	000423004	BALL	SEAT, ROCKER ARM, INT & EXH	29.00	EA	87.18	2,528.22
MPP	000423020	ORING	INTAKE & EXHAUST	53.00	EA	2.16	114.35
MPP	000423046	SEAT	EXHAUST VALVE	9.00	EA	2,849.68	25,647.16
MPP	000423061	BUSHING	VALVE GUIDE, LOWER	13.00	EA	352.30	4,579.90
MPP	000423087	PASSAGE	WATER, INTAKE & EXHAUST VALVES	15.00	EA	115.67	1,735.05
MPP	000423103	BUSHING	VALVE GUIDE, UPPER	17.00	EA	67.34	1,144.78
MPP	000423129	VALVE	INTAKE	13.00	EA	142.51	1,852.65
MPP	000423145	INSERTS	SEAT, INT (STD)	44.00	EA	818.81	36,027.64

NOTE: SOH - Stock on Hand

Source: DARS 3342 Report (as of 5/31/07)

Maui Electric Company, Limited

MATERIALS PHYSICAL INVENTORY
MAALAEA POWER PLANT

WH	STOCK CODE	Item	Description	SOH	Unit	Price/ Unit	Total Cost/ Item
MPP	000423160	BUSHING	VALVE GUIDE, UPPER	10.00	EA	21.83	218.29
MPP	000423186	SPRING	INSIDE, INTAKE & EXHAUST VLV	2.00	EA	16.62	33.24
MPP	000423202	BUSHING	VALVE GUIDE, LOWER	10.00	EA	60.87	608.71
MPP	000423228	SPRING	OUTSIDE, INTAKE & EXHAUST	1.00	EA	36.72	36.72
MPP	000423244	VALVE	EXHAUST	25.00	EA	137.32	3,433.12
MPP	000423269	RETAINER	SPRING, INTAKE & EXHAUST	2.00	EA	185.18	370.36
MPP	000423285	SHIM	INTAKE & EXHAUST	45.00	EA	16.72	752.40
MPP	000423301	BODY	INDICATOR COCK	1.00	EA	202.11	202.11
MPP	000423327	GASKET	INDICATOR COCK	39.00	EA	0.66	25.90
MPP	000423330	NEEDLE, INDICATOR COCK	PC-2V CYLINDER HEAD INDICATOR COCK	4.00	EA	0.00	0.00
MPP	000423343	STEM	INDICATOR COCK	7.00	EA	144.76	1,013.33
MPP	000423368	WIRE	SAFETY, 15 GA., INDICATOR COCK	0.00	FT	0.09	0.00
MPP	000423384	PLUG	CYLINDER HEAD	1.00	EA	374.04	374.04
MPP	000423400	ORING	FR-35, CYLINDER HEAD PLUG	28.00	EA	4.32	120.96
MPP	000423426	TUBE	INDICATOR EXTENSION	5.00	EA	818.69	4,093.46
MPP	000423442	COCK	INDICATOR (COMP ASSY)	4.00	EA	755.51	3,022.05
MPP	000423467	GASKET	INDICATOR COCK	97.00	EA	2.44	236.68
MPP	000423483	KIT	SERVICE	0.00	EA	8,373.48	0.00
MPP	000423509	COLLAR	AIR INTAKE MANIFOLD	2.00	EA	354.42	708.83
MPP	000423525	ORING	AIR INTAKE MANIFOLD	40.00	EA	9.70	388.13
MPP	000423541	CAPSCREW	AIR INTAKE MANIFOLD	14.00	EA	10.24	143.36
MPP	000423566	GASKET	AIR INTAKE MANIFOLD	16.00	EA	1.24	19.80
MPP	000423582	BELLOWS	EXHAUST, 24" DIAMETER	3.00	EA	1,268.30	3,804.90
MPP	000423608	GASKET	EXH MANIFOLD	75.00	EA	9.54	715.50
MPP	000423624	GASKET	EXH MANIFOLD	75.00	EA	8.15	611.25
MPP	000423640	CAPSCREW	EXH MANIFOLD	17.00	EA	73.11	1,242.87
MPP	000423665	GASKET	TURBOCHARGER, EXH MANIFOLD	6.00	EA	17.17	103.04
MPP	000423681	CAPSCREW	SPECIAL, EXH MANIFOLD	32.00	EA	84.42	2,701.34
MPP	000423707	LOCKWASHER	1/2", EXHAUST MANIFOLD	72.00	EA	0.55	39.60
MPP	000423723	PLUG	INTERCOOLER TO MANIFOLD AIR DUCT	32.00	EA	12.08	386.56
MPP	000423749	TURBO-CHARGER	(LEFT HALF) S/N 336027 (VTR400)	0.00	EA	91,200.47	0.00
MPP	000423764	WIRE	THERMOCOUPLE	0.00	FT	4.29	0.00
MPP	000423780	TUBING	(TEFLON) 5/16" OD X 3/8" OD	44.00	FT	3.72	163.79
MPP	000423806	MAGNET	TURBOCHARGER TACHOMETER PICKUP	2.00	EA	242.65	485.30
MPP	000423822	GASKET	AIR DUCT	2.00	EA	2.76	5.52
MPP	000423848	PLUG	MAGNETIC, TURBO TACH PICKUP	2.00	EA	697.85	1,395.70
MPP	000423863	ORING	INTERCOOLER TO MANIFOLD AIR DUCT	2.00	EA	28.83	57.66
MPP	000423889	JOINT	EXPANSION, 6"OD X 14"LG	2.00	EA	521.95	1,043.90
MPP	000423905	NUT	HEX, 1/2"-13 UNC	0.00	EA	0.23	0.00
MPP	000423905	NUT	HEX, 1/2"-13 UNC	0.00	EA	0.23	0.00
MPP	000423921	JOINT	EXPANSION, 6"OD X 08"LG	1.00	EA	698.57	698.57
MPP	000423947	CAPSCREW	1/2"-13 X 2" USS	101.00	EA	1.47	148.83
MPP	000423947	CAPSCREW	1/2"-13 X 2" USS	101.00	EA	1.47	148.83
MPP	000423962	CAPSCREW	1/2"-13 X 2-1/4"	63.00	EA	1.05	66.15
MPP	000423988	JOINT	EXPANSION .625 INCONEL 6"ID X 7"LONG	13.00	EA	850.69	11,059.02
MPP	000424002	JOINT	EXPANSION	3.00	EA	700.65	2,101.95
MPP	000424028	GASKET	CORRUGATED METAL, STYLE 900 6-9/16" OD	61.00	EA	16.37	998.51
MPP	000424044	GASKET	CORRUGATED METAL, STYLE 900	100.00	EA	15.48	1,547.97
MPP	000424069	GASKET	LUBE OIL PIPING	1.00	EA	79.07	79.07
MPP	000424085	GASKET	LUBE OIL PIPING	2.00	EA	6.53	13.06
MPP	000424101	GASKET	LUBE OIL PIPING	2.00	EA	9.07	18.14
MPP	000424127	GASKET	LUBE OIL PIPING	1.00	EA	8.50	8.50
MPP	000424143	LOCKWASHER	LUBE OIL PIPING	30.00	EA	4.00	120.00
MPP	000424168	ADAPTER	LUBE OIL PIPING	2.00	EA	49.75	99.50
MPP	000424184	GASKET	LUBE OIL PIPING	6.00	EA	1.03	6.18
MPP	000424200	CONNECTOR	LUBE OIL PIPING	2.00	EA	24.91	49.82
MPP	000424226	GASKET	ROCKER, LUBE OIL HEADER, 14 DIA. - 814	8.00	EA	6.49	51.92
MPP	000424242	BEARING	BALL, ROCKER, LUBE OIL PUMP	2.00	EA	28.16	56.31
MPP	000424267	GASKET	HEAD, (PLAIN), ROCKER LO. PUMP	1.00	EA	6.58	6.58
MPP	000424283	VALVE	BACK SUPPLY FLOAT (ROCKER, LUBE OIL	2.00	EA	234.48	468.96
MPP	000424309	GASKET	HEAD, ROCKER LUBE OIL PUMP	4.00	EA	9.56	38.25
MPP	000424325	GASKET	ROCKER, LUBE OIL HEADER	3.00	EA	1.10	3.30
MPP	000424341	GASKET	RELIEF VALVE, ROCKER LO. PUMP	1.00	EA	0.92	0.92
MPP	000424366	GASKET	ROCKER, LUBE OIL HEADER	3.00	EA	0.57	1.71
MPP	000424382	CLOSURE	ROCKER LO. PUMP	2.00	EA	30.21	60.41
MPP	000424408	FLOAT	ROCKER, LUBE OIL HEADER	2.00	EA	8.73	17.46
MPP	000424424	RING	SNAP, ROCKER LO. PUMP	7.00	EA	7.07	49.51

NOTE: SOH - Stock on Hand

Source: DARS 3342 Report (as of 5/31/07)

Maui Electric Company, Limited

MATERIALS PHYSICAL INVENTORY
MAALAEA POWER PLANT

WH	STOCK CODE	Item	Description	SOH	Unit	Price/ Unit	Total Cost/ Item
MPP	000424440	GASKET	ROCKER, LUBE OIL HEADER	25.00	EA	6.10	152.59
MPP	000424465	ORING	FR-25 (NAT'L 220) ROCKER, LUBE OIL	18.00	EA	0.99	17.76
MPP	000424481	FLEX HOSE ASSY	ROCKER ARM, LUBE OIL HEADER	3.00	EA	10.61	31.83
MPP	000424507	ORING	LUBE OIL PIPING	7.00	EA	1.15	8.05
MPP	000424523	ADAPTER, STEEL JIC	ROCKER, LUBE OIL HEADER	4.00	EA	52.22	208.88
MPP	000424549	REPAIR KIT	(SPRING #91-082) LUBE OIL PIPING	2.00	EA	129.33	258.66
MPP	000424564	ADAPTER	ROCKER, LUBE OIL HEADER	5.00	EA	52.45	262.25
MPP	000424570	GASKET	FOR LUBRICATING PUMP 008-160.	2.00	EA	27.68	55.35
MPP	000424580	MBO STEEL ADAPTER	ROCKER, LUBE OIL HEADER, 90 DEGREE	6.00	EA	7.83	46.98
MPP	000424606	GASKET	ROCKER, LUBE OIL HEADER	25.00	EA	3.30	82.51
MPP	000424622	JIC ADAPTER, STEEL, 45 DEGREE	ROCKER, LUBE OIL HEADER, 3/8 X 3/8P,	5.00	EA	11.16	55.80
MPP	000424648	SWITCH	LIQUID LEVEL, ROCKER, LUBE OIL HEADER	0.00	EA	491.38	0.00
MPP	000424648	SWITCH	LIQUID LEVEL, ROCKER, LUBE OIL HEADER	0.00	EA	491.38	0.00
MPP	000424663	VALVE	RELIEF	0.00	EA	3,051.42	0.00
MPP	000424689	NOZZLE ASSY	INJECTION	16.00	EA	2,187.17	34,994.64
MPP	000424705	WASHER	NOZZLE LOCK	45.00	EA	5.54	249.14
MPP	000424721	TIP ASSY	(NOZZLE) 55MM INJECTION	28.00	EA	201.59	5,644.58
MPP	000424747	SPRING	NOZZLE, INJECTION	44.00	EA	34.48	1,517.22
MPP	000424762	GASKET	NOZZLE, TIP	32.00	EA	8.02	256.49
MPP	000424788	ROD	NOZZLE, PUSH	11.00	EA	62.86	691.43
MPP	000424804	ORING	INJECTION NOZZLE, FR-34	58.00	EA	0.22	12.67
MPP	000424820	NUT	INJECTION TIP	6.00	EA	138.47	830.84
MPP	000424846	BODY ASSY	NOZZLE, INJECTION	17.00	EA	809.22	13,756.81
MPP	000424861	PIN	COTTER, 3/16" X 1-3/4"	19.00	EA	0.15	2.81
MPP	000424887	PIN	INJECTOR BODY DOWEL	34.00	EA	9.49	322.62
MPP	000424903	PUMP ASSY	INJECTION	0.00	EA	2,280.95	0.00
MPP	000424929	GUIDE	SPRING, INJECTION PUMP	5.00	EA	171.55	857.75
MPP	000424945	VALVE ASSY	DELIVERY, INJECTION PUMP	17.00	EA	257.67	4,380.35
MPP	000424960	RING	RETAINING, INJECTION PUMP	7.00	EA	5.91	41.37
MPP	000424986	GASKET	ROUND, 14" X 19" X 1"	9.00	EA	2.75	24.75
MPP	000425009	PLUNGER & BARREL	INJECTION PUMP	17.00	EA	775.54	13,184.13
MPP	000425025	SCREW	LOCATING	2.00	EA	12.38	24.76
MPP	000425041	SPRING	PLUNGER	9.00	EA	57.09	513.81
MPP	000425066	ORING	52 X 58 X 3, INJECTION PUMP	35.00	EA	4.01	140.35
MPP	000425082	RING	DISCHARGE FITTING	10.00	EA	55.73	557.26
MPP	000425108	SPRING	VALVE	32.00	EA	14.25	456.11
MPP	000425124	HOLDER ASSY	NOZZLE	11.00	EA	688.67	7,575.41
MPP	000425140	GASKET	COVER, (LOCKNUT)	12.00	EA	2.05	24.60
MPP	000425165	GASKET	VENT	35.00	EA	0.69	24.15
MPP	000425181	SPRING	FUEL OIL	28.00	EA	21.71	607.88
MPP	000425207	GASKET	INJECTION PUMP	125.00	EA	2.03	254.00
MPP	000425223	FERRULE	INJECTION PUMP	32.00	EA	87.09	2,786.76
MPP	000425249	PIN	TAPER	4.00	EA	0.38	1.52
MPP	000425264	CAPSCREW	INJECTION PUMP DRIVE	0.00	EA	18.92	0.00
MPP	000425280	GASKET	INJECTION PUMP DRIVE	25.00	EA	3.34	83.51
MPP	000425306	ROLLER	INJECTION PUMP DRIVE	2.00	EA	185.97	371.94
MPP	000425322	BUSHING	FLOATING, INJECTION PUMP DRIVE	1.00	EA	43.92	43.92
MPP	000425348	AXLE	ROLLER, INJECTION PUMP DRIVE	3.00	EA	128.99	386.97
MPP	000425363	SETSCREW	INJECTION PUMP DRIVE	22.00	EA	1.12	24.64
MPP	000425389	SPRING	INJECTION PUMP DRIVE	6.00	EA	59.63	357.78
MPP	000425405	RING	OIL SEALER	14.00	EA	10.45	146.34
MPP	000425421	PLUG	INJECTION PUMP DRIVE	4.00	EA	14.96	59.84
MPP	000425447	PIN	ROLL, INJECTION PUMP DRIVE	38.00	EA	1.72	65.36
MPP	000425462	GASKET	INJECTION PUMP DRIVE	2.00	EA	2.06	4.12
MPP	000425488	PLATE	SPRING PRESSURE	18.00	EA	119.28	2,147.00
MPP	000425504	RING	SUPPORT	13.00	EA	24.29	315.77
MPP	000425520	ORING	INJECTION PUMP DRIVE	86.00	EA	1.67	143.86
MPP	000425546	ORING	INJECTION PUMP DRIVE	38.00	EA	0.49	18.56
MPP	000425561	SHIM	INJECTION PUMP DRIVE	9.00	EA	20.88	187.92
MPP	000425587	SETSCREW	INJECTION PUMP DRIVE	66.00	EA	35.36	2,333.76
MPP	000425603	BEARING	CAMSHAFT	2.00	EA	323.04	646.08
MPP	000425629	SHELL BEARING	CAMSHAFT, UPPER & LOWER	8.00	ST	188.74	1,509.91
MPP	000425645	BODY	PUMP DRIVE	0.00	EA	1,477.39	0.00
MPP	000425660	CAPSCREW	INJECTION PUMP DRIVE	3.00	EA	15.06	45.18
MPP	000425686	CAPSCREW	INJECTION PUMP DRIVE	6.00	EA	10.88	65.28
MPP	000425702	PIN	FIXING, PUMP (BOLT)	14.00	EA	51.92	726.88
MPP	000425728	NUT	INJECTION PUMP DRIVE	2.00	EA	6.02	12.04

NOTE: SOH - Stock on Hand

Source: DARS 3342 Report (as of 5/31/07)

Maui Electric Company, Limited

MATERIALS PHYSICAL INVENTORY
MAALAEA POWER PLANT

WH	STOCK CODE	Item	Description	SOH	Unit	Price/ Unit	Total Cost/ Item
MPP	000425744	SLEEVE	INJECTION PUMP DRIVE	2.00	EA	437.93	875.86
MPP	000425769	STUD	INJECTION PUMP DRIVE	8.00	EA	37.52	300.16
MPP	000425785	PIN	INJECTION PUMP DRIVE	10.00	EA	0.54	5.40
MPP	000425801	GUIDE	ROLLER	5.00	EA	253.93	1,269.65
MPP	000425827	LOCKWASHER	5/8", INJECTION PUMP DRIVE	51.00	EA	0.00	0.00
MPP	000425843	CAPSCREW	PUSHER	1.00	EA	31.50	31.50
MPP	000425868	LOCKWASHER	INJECTION PUMP DRIVE	147.00	EA	0.40	58.80
MPP	000425884	FLANGE	INJECTION PUMP DRIVE	3.00	EA	64.46	193.38
MPP	000425900	LOCKNUT	INJECTION PUMP DRIVE	1.00	EA	16.26	16.26
MPP	000425926	SUPPORT	SPRING	3.00	EA	129.79	389.37
MPP	000425942	WASHER	INJECTION PUMP DRIVE	4.00	EA	47.61	190.44
MPP	000425967	TUBING	INJECTION, (COMPLETE)	5.00	EA	1,027.79	5,138.93
MPP	000425983	ORING	INJECTION TUBING	94.00	EA	2.50	235.00
MPP	000426007	GROMMET	INJECTION TUBING	45.00	EA	11.37	511.66
MPP	000426023	TUBE ASSY	LOWER, FUEL OIL PIPING	3.00	EA	728.91	2,186.73
MPP	000426049	ADAPTER	FUEL OIL PIPING	7.00	EA	0.00	0.00
MPP	000426064	TUBE ASSY	UPPER, FUEL OIL PIPING	3.00	EA	949.80	2,849.41
MPP	000426080	SLEEVE	FUEL OIL PIPING	30.00	EA	3.34	100.20
MPP	000426106	GASKET	1.5, FUEL OIL PIPING	30.00	EA	0.52	15.60
MPP	000426122	SPACER	FUEL OIL PIPING	8.00	EA	6.31	50.48
MPP	000426148	GASKET	FUEL OIL PIPING	30.00	EA	1.50	45.12
MPP	000426163	GASKET	FUEL OIL PIPING	27.00	EA	1.53	41.35
MPP	000426189	CAPSCREW	(12-1.75 X 75) FUEL OIL PIPING	11.00	EA	2.07	22.77
MPP	000426205	TUBE ASSY	INJECTION DRAIN	4.00	EA	81.25	325.00
MPP	000426221	NOZZLE	FITTING, FUEL OIL PIPING	52.00	EA	6.87	357.24
MPP	000426247	BLOCK	SUPPORT	7.00	EA	183.28	1,282.96
MPP	000426262	CANNISTER	FUEL OIL	1.00	EA	160.00	160.00
MPP	000426288	GASKET	1.5 (FUEL HEADER FL.)	9.00	EA	4.28	38.54
MPP	000426304	SPRING	PLUNGER, INJ. PUMP	0.00	EA	77.83	0.00
MPP	000426320	RACK	CONTROL, INJ. PUMP	2.00	EA	444.75	889.50
MPP	000426346	GASKET	FUEL OIL FILTER & PIPING	32.00	EA	2.43	77.80
MPP	000426361	GASKET	COVER	18.00	EA	2.81	50.50
MPP	000426387	ORING	11/16" X 7/8" X 3/32"	61.00	EA	0.41	25.01
MPP	000426403	CONNECTOR	FUEL OIL FILTER & PIPING	10.00	EA	6.16	61.60
MPP	000426429	TUBING	FUEL OIL FILTER & PIPING	10.00	EA	9.72	97.20
MPP	000426445	GASKET	(ASBESTOS) SIGHTGLASS	0.00	EA	1.05	0.00
MPP	000426460	SIGHTGLASS	INJECTION COOLING RETURN	12.00	EA	68.08	816.96
MPP	000426486	NUT	PACKING	53.00	EA	41.78	2,214.34
MPP	000426502	ORING	INJECTOR COOLING PIPING	32.00	EA	4.55	145.60
MPP	000426528	GASKET	INJECTOR COOLING PIPING	10.00	EA	0.85	8.50
MPP	000426544	TUBE	WATER INLET	10.00	EA	154.01	1,540.10
MPP	000426569	TUBE	WATER OUTLET	4.00	EA	126.36	505.44
MPP	000426585	GROMMET	INJECTOR COOLING PIPING	0.00	EA	10.99	0.00
MPP	000426601	ORING	INJECTOR COOLING PIPING	83.00	EA	0.32	26.56
MPP	000426627	ELBOW	INJECTOR COOLING PIPING	10.00	EA	13.71	137.10
MPP	000426643	HOSE	AEROQUIP-2651-8	30.00	FT	3.76	112.80
MPP	000426668	GASKET	HOUSING, FUEL OIL SUPPLY PUMP & DRIVE	6.00	EA	12.16	72.94
MPP	000426684	SHELL	BEARING, FUEL OIL SUPPLY PUMP & DRIVE	6.00	EA	59.75	358.50
MPP	000426700	GASKET	FUEL OIL SUPPLY PUMP & DRIVE	10.00	EA	6.91	69.06
MPP	000426726	RING	SEALING ASSY.	2.00	ST	74.59	149.18
MPP	000426742	SPRING,	RELIEF VALVE	4.00	EA	98.71	394.83
MPP	000426767	LOCKPLATE	FUEL OIL SUPPLY PUMP & DRIVE	0.00	EA	20.63	0.00
MPP	000426783	ORING	(3.6 X 28.2) F.O. SUPPLY PUMP	14.00	EA	3.29	46.06
MPP	000426809	GASKET	FUEL OIL SUPPLY PUMP & DRIVE	8.00	EA	13.35	106.79
MPP	000426825	PIN	COTTER	10.00	EA	0.06	0.63
MPP	000426841	LOCKWASHER	FUEL OIL SUPPLY PUMP & DRIVE	15.00	EA	0.31	4.65
MPP	000426866	KEY	FUEL OIL SUPPLY PUMP & DRIVE	5.00	EA	33.10	165.50
MPP	000426882	GASKET	FUEL OIL SUPPLY PUMP & DRIVE	2.00	EA	8.91	17.82
MPP	000426908	GASKET	FUEL OIL SUPPLY PUMP & DRIVE	2.00	EA	4.64	9.27
MPP	000426924	RING	SEAL, FUEL OIL SUPPLY PUMP & DRIVE	2.00	EA	50.00	100.00
MPP	000426940	ORING	FUEL OIL SUPPLY PUMP & DRIVE	30.00	EA	0.20	5.94
MPP	000426965	CIRCLIP	FUEL OIL SUPPLY PUMP & DRIVE	6.00	EA	7.03	42.18
MPP	000426981	GASKET	PAPER, FUEL OIL SUPPLY PUMP & DRIVE	6.00	EA	8.22	49.32
MPP	000427005	LOCKPLATE	FUEL OIL SUPPLY PUMP & DRIVE	1.00	EA	5.63	5.63
MPP	000427021	PIN	FLANGED	8.00	EA	37.42	299.32
MPP	000427047	GASKET	FUEL OIL SUPPLY PUMP & DRIVE	4.00	EA	1.42	5.68
MPP	000427062	PUMP	FUEL	0.00	EA	4,119.03	0.00

NOTE: SOH - Stock on Hand

Source: DARS 3342 Report (as of 5/31/07)

Maui Electric Company, Limited

MATERIALS PHYSICAL INVENTORY
MAALAEA POWER PLANT

WH	STOCK CODE	Item	Description	SOH	Unit	Price/ Unit	Total Cost/ Item
MPP	000427088	PUMP	FUEL OIL	0.00	EA	1,272.41	0.00
MPP	000427104	GASKET	INJECTION TUBING	57.00	EA	2.07	117.99
MPP	000427120	LOCKPLATE	FUEL OIL SUPPLY PUMP & DRIVE	20.00	EA	0.67	13.40
MPP	000427146	CAPSCREW	COOLING WATER ELBOW	50.00	EA	1.62	81.00
MPP	000427161	GASKET	COOLING WATER ELBOW	9.00	EA	1.35	12.17
MPP	000427187	GASKET	COOLING WATER ELBOW	56.00	EA	0.53	29.72
MPP	000427203	PLUG	COOLING WATER ELBOW	16.00	EA	6.85	109.60
MPP	000427229	ORING	COOLING WATER ELBOW	54.00	EA	1.70	91.80
MPP	000427245	SCREW	COOLING WATER ELBOW	2.00	EA	44.18	88.36
MPP	000427260	SCREW	COOLING WATER ELBOW	2.00	EA	47.00	94.00
MPP	000427286	GASKET	COOLING WATER ELBOW	56.00	EA	7.80	436.80
MPP	000427302	CAPSCREW	COOLING WATER ELBOW	2.00	EA	37.90	75.80
MPP	000427328	TUBE	DRAIN, COOLING WATER ELBOW	1.00	EA	80.40	80.40
MPP	000427344	ORING	COOLING WATER ELBOW	48.00	EA	2.22	106.57
MPP	000427369	ELBOW	WATER INLET	2.00	EA	433.16	866.32
MPP	000427385	NUT	WATER HEADER	0.00	EA	0.20	0.00
MPP	000427401	COVER	WATER OUTLET	2.00	EA	244.43	488.86
MPP	000427427	GASKET	COVER, WATER PUMP & DRIVE	10.00	EA	9.26	92.57
MPP	000427443	SWITCH	LIQUID LEVEL	1.00	EA	361.15	361.15
MPP	000427468	SHELL	BEARING	2.00	EA	327.58	655.16
MPP	000427484	SEAL	WATER PUMP & DRIVE	2.00	EA	41.09	82.18
MPP	000427500	PLUG	WATER PUMP & DRIVE	3.00	EA	8.71	26.13
MPP	000427526	NUT	IMPELLER, WATER PUMPS - PEGSON	3.00	EA	347.92	1,043.76
MPP	000427530	SEAL, MECHANICAL	FOR WATER PUMP 010-164-1.	3.00	EA	950.45	2,851.36
MPP	000427542	WASHER	TAB, WATER PUMPS - PEGSON	1.00	EA	40.27	40.27
MPP	000427567	RING	WEAR, WATER PUMPS - PEGSON	2.00	EA	569.09	1,138.18
MPP	000427583	GASKET	WATER PUMPS - PEGSON	4.00	EA	19.76	79.04
MPP	000427609	STUD	WATER PUMPS - PEGSON	4.00	EA	1.14	4.56
MPP	000427625	STUD	WATER PUMPS - PEGSON	4.00	EA	0.43	1.72
MPP	000427641	LOCKPLATE	WATER PUMPS - PEGSON	8.00	EA	0.29	2.32
MPP	000427666	KNOB	OVERSPEED, GOVERNOR	2.00	EA	15.64	31.28
MPP	000427682	ELEMENT	MEASURING, OVER SPEED GOVERNOR	0.00	EA	663.05	0.00
MPP	000427708	CAPSCREW	12 - 1.75 X 75, GOVERNOR & PIPING	2.00	EA	4.99	9.98
MPP	000427724	SECTION	TOOTHED, FUEL CONTROL LINKAGE	1.00	EA	710.76	710.76
MPP	000427740	BUSHING	FUEL CONTROL LINKAGE	2.00	EA	59.27	118.54
MPP	000427765	BUTTON	FUEL CONTROL LINKAGE	2.00	EA	80.61	161.22
MPP	000427781	ASSEMBLY, LEVER	FOR FUEL CONTROL LINKAGE, 011-102	1.00	EA	2,498.09	2,498.09
MPP	000427807	BUSHING	FUEL CONTROL LINKAGE	10.00	EA	197.07	1,970.70
MPP	000427823	RING	RETAINING, 14 DIA	43.00	EA	0.25	10.59
MPP	000427849	LINK, DOUBLE	FOR FUEL CONTROL LINKAGE 011-102	1.00	EA	166.62	166.62
MPP	000427864	LEVER	WITH BUSHING, FUEL CONTROL LINKAGE	11.00	EA	449.71	4,946.81
MPP	000427880	END	EYE, FUEL CONTROL LINKAGE	6.00	EA	120.65	723.88
MPP	000427906	PIN	3/16" X 1-1/4"	14.00	EA	0.46	6.49
MPP	000427922	SLEEVE	FUEL CONTROL LINKAGE	1.00	EA	467.19	467.19
MPP	000427948	KEY	6 X 6 X 25, FUEL CONTROL LINKAGE	1.00	EA	31.80	31.80
MPP	000427963	SPRING	INTERNAL	3.00	EA	45.03	135.08
MPP	000427989	PLATFORM	LOCK, 12, FUEL CONTROL LINKAGE	4.00	EA	0.59	2.36
MPP	000428003	SPRING	EXTERNAL	3.00	EA	54.05	162.14
MPP	000428029	PIN	FUEL CONTROL LINKAGE	2.00	EA	66.25	132.50
MPP	000428045	PLUG	FUEL CONTROL LINKAGE	4.00	EA	100.48	401.90
MPP	000428060	PUSHROD	FUEL CONTROL LINKAGE	3.00	EA	411.39	1,234.16
MPP	000428086	SHAFT ASSY	GOVERNOR TELESCOPING	2.00	EA	0.00	0.00
MPP	000428102	STOP	FUEL CONTROL LINKAGE	3.00	EA	58.52	175.56
MPP	000428128	LEVER ASSY	FUEL CONTROL LINKAGE	2.00	EA	559.32	1,118.64
MPP	000428144	PIN	FUEL CONTROL LINKAGE	14.00	EA	57.59	806.31
MPP	000428169	TUBE	FUEL CONTROL LINKAGE	28.00	EA	137.33	3,845.33
MPP	000428185	TUBE	FUEL INJECTOR	3.00	EA	182.16	546.48
MPP	000428201	BAR	REGULATING	23.00	EA	87.38	2,009.77
MPP	000428208	VALVE, ASCO 3-WAY, NORMALLY CLOSED,	1/4" CONNECTION, AIR MEDIUM, 125VDC,	1.00	EA	513.40	513.40
MPP	000428227	NUT	THRUST	2.00	EA	92.42	184.84
MPP	000428243	STOP NUT	FUEL CONTROL LINKAGE	6.00	EA	21.83	130.99
MPP	000428268	LOCKPLATE	FUEL CONTROL LINKAGE	24.00	EA	4.24	101.77
MPP	000428284	CAPSCREW	12 X 50 FUEL CONTROL LINKAGE	8.00	EA	3.61	28.88
MPP	000428300	PIN	COTTER, 1/8" X 1-3/4"	18.00	EA	0.02	0.36
MPP	000428326	RING	WASHER	18.00	EA	18.64	335.55
MPP	000428342	PIN	ROLL, 7/16" X 1-1/4"	79.00	EA	0.31	24.65
MPP	000428367	PIN	FUEL CONTROL LINKAGE	2.00	EA	174.89	349.77

NOTE: SOH - Stock on Hand

Source: DARS 3342 Report (as of 5/31/07)

Maui Electric Company, Limited

MATERIALS PHYSICAL INVENTORY
MAALAEA POWER PLANT

WH	STOCK CODE	Item	Description	SOH	Unit	Price/ Unit	Total Cost/ Item
MPP	000428383	SHAFT	FUEL CONTROL LINKAGE	0.00	EA	21.30	0.00
MPP	000428409	BUSHING	FUEL CONTROL LINKAGE	17.00	EA	9.18	156.02
MPP	000428425	RING	RETAINING, 30 DIA.	2.00	EA	1.45	2.90
MPP	000428441	RING	RETAINING, 52 DIA	2.00	EA	3.00	6.00
MPP	000428466	ORING	JT-FR23, SHUT DOWN CONTROLS	0.00	EA	5.84	0.00
MPP	000428482	ROD	FUSE, 6-7/8"	0.00	EA	52.23	0.00
MPP	000428508	ROD	FUSE, (MAIN BRG) 10-1/2"	15.00	EA	38.58	578.70
MPP	000428524	DETECTOR	TEMPERATURE, AMOT	7.00	EA	82.61	578.27
MPP	000428540	ROD	FUSE, (THRUST BRG-3"LG)	4.00	EA	23.70	94.80
MPP	000428565	ROD	FUSE, CALCON/AMOT	2.00	EA	42.06	84.12
MPP	000428581	VALVE	VENT, TEMPERATURE DETECTOR PIPING	4.00	EA	204.10	816.40
MPP	000428607	VALVE	TEMP DETECTOR PIPING	0.00	EA	50.54	0.00
MPP	000428623	VALVE	TEMP DETECTOR PIPING	1.00	EA	65.33	65.33
MPP	000428649	ORIFICE	TEMP DETECTOR PIPING	2.00	EA	8.22	16.44
MPP	000428664	SWITCH	AMOT VIBRO-GUARD (VIBRATION ALARM)	2.00	EA	515.15	1,030.30
MPP	000428680	GOV ASSY	OVERSPEED	1.00	EA	3,307.41	3,307.41
MPP	000428706	GASKET	SHUTDOWN CONTROLS	6.00	EA	4.03	24.18
MPP	000428722	GASKET	SHUTDOWN CONTROLS	4.00	EA	3.13	12.50
MPP	000428748	ORING	SHUTDOWN CONTROLS	6.00	EA	4.04	24.24
MPP	000428763	ORING	SHUTDOWN CONTROLS	5.00	EA	3.20	16.01
MPP	000428789	GASKET	SHUTDOWN CONTROLS	2.00	EA	1.10	2.20
MPP	000428805	GASKET	SHUTDOWN CONTROLS	3.00	EA	3.20	9.60
MPP	000428821	PLUG	AIR START VALVE	1.00	EA	173.08	173.08
MPP	000428847	ORING	AIR START VALVE	0.00	EA	9.66	0.00
MPP	000428862	ORING	FR 15, AIR START PIPING	23.00	EA	0.89	20.47
MPP	000428888	SPRING	VALVE, AIR START VALVE	3.00	EA	7.21	21.62
MPP	000428904	VALVE ASSY	AIR START	8.00	EA	1,518.99	12,151.92
MPP	000428920	VALVE	AIR START	5.00	EA	657.57	3,287.86
MPP	000428946	LOCKPLATE	180 DEG - 12, AIR START VALVE	31.00	EA	2.64	81.92
MPP	000428961	BODY	VALVE, AIR START VALVE	2.00	EA	633.55	1,267.09
MPP	000428987	ORING	FR-29, AIR START VALVE	18.00	EA	1.48	26.63
MPP	000429001	CAP	BODY, AIR START VALVE	2.00	EA	101.65	203.30
MPP	000429027	ORING	FR-145, AIR START VALVE	26.00	EA	1.06	27.59
MPP	000429043	GASKET	PISTON, QUAD RING	10.00	EA	12.40	123.97
MPP	000429068	PLUG ASSY	L BANK, AIR START VALVE	1.00	EA	67.50	67.50
MPP	000429084	RING	SEAL, AIR START DISTRIBUTOR	9.00	EA	7.36	66.23
MPP	000429100	PIN	COTTER, AIR START VALVE	0.00	EA	0.06	0.00
MPP	000429126	GASKET	ROUND, AIR START PIPING	37.00	EA	3.10	114.54
MPP	000429142	GASKET	AIR START CONTROL VALVE	1.00	EA	18.96	18.96
MPP	000429167	GASKET	AIR START CONTROL VALVE	2.00	EA	9.12	18.24
MPP	000429183	GASKET	AIR START PIPING	32.00	EA	0.35	11.32
MPP	000429209	SHAFT	AIR START DISTRIBUTOR	1.00	EA	351.06	351.06
MPP	000429225	PIN	AIR START DISTRIBUTOR	9.00	EA	2.56	23.04
MPP	000429241	DEFLECTOR	AIR START DISTRIBUTOR	2.00	EA	66.03	132.06
MPP	000429266	SLEEVE	AIR START DISTRIBUTOR	6.00	EA	8.58	51.45
MPP	000429282	NUT	AIR START DISTRIBUTOR	19.00	EA	31.39	596.41
MPP	000429308	WASHER	AIR START DISTRIBUTOR	10.00	EA	1.28	12.81
MPP	000429324	PLATE	END, AIR START DISTRIBUTOR	1.00	EA	84.95	84.95
MPP	000429340	ELEMENT	AIR START PIPING	2.00	EA	158.23	316.46
MPP	000429365	ORING	AIR START PIPING	16.00	EA	22.67	362.65
MPP	000429381	ORING	AIR START PIPING	1.00	EA	177.78	177.78
MPP	000429407	CAPSCREW	AIR START CONTROL VALVE	2.00	EA	3.71	7.42
MPP	000429423	ORING	AIR START CONTROL VALVE	10.00	EA	1.25	12.50
MPP	000429449	ORING	AIR START CONTROL VALVE	0.00	EA	1.36	0.00
MPP	000429464	GASKET	AIR START PIPING	6.00	EA	11.71	70.26
MPP	000429480	JUMPER ASSY	INTERMEDIATE, AIR START PIPING	1.00	EA	884.74	884.74
MPP	000429506	OILER ASSY	AIR START PIPING	1.00	EA	559.64	559.64
MPP	000429522	ADAPTER	AIR START PIPING	2.00	EA	83.34	166.68
MPP	000429548	GASKET	AIR START PIPING	13.00	EA	2.52	32.76
MPP	000429563	ADAPTER	AIR START PIPING	4.00	EA	68.24	272.96
MPP	000429566	KIT, REPAIR, FOR ASCO X835225 VALVE,	1-1/2" PIPE, 50# SUPPLY AIR.	1.00	KT	144.37	144.37
MPP	000429589	RING	SECT OIL 1108T	2.00	EA	53.93	107.86
MPP	000429605	SEAL KIT	MODULAR SLVOIL	1.00	ST	136.14	136.14
MPP	000429621	GROMMET KIT	DODGE PIPE	4.00	EA	29.58	118.32
MPP	000429647	LINER ASSY	DODGE SLEEVOIL	1.00	EA	1,539.75	1,539.75
MPP	000429662	HOSE ASSY	HOSE (B/M P12600816)	2.00	EA	0.00	0.00
MPP	000429688	PLUGS	ZINC, 3/8"	6.00	EA	6.09	36.54

NOTE: SOH - Stock on Hand

Source: DARS 3342 Report (as of 5/31/07)

Maui Electric Company, Limited

MATERIALS PHYSICAL INVENTORY
MAALAEA POWER PLANT

WH	STOCK CODE	Item	Description	SOH	Unit	Price/ Unit	Total Cost/ Item
MPP	000429704	PLUGS	ZINC, 1/2" x 3"	17.00	EA	6.75	114.77
MPP	000429720	PLUG	ZINC	29.00	EA	2.92	84.68
MPP	000429746	PLUG	ZINC, MDE-5	12.00	EA	29.52	354.27
MPP	000429761	PUMP	BY-PASS FILTER	1.00	EA	3,297.99	3,297.99
MPP	000429787	GASKET	LUBE OIL SYSTEM	14.00	EA	3.59	50.23
MPP	000429803	SPRING	LUBE OIL SYSTEM	1.00	EA	0.78	0.78
MPP	000429829	POPPET	LUBE OIL SYSTEM	1.00	EA	6.48	6.48
MPP	000429845	HEATER	BY PASS	8.00	EA	554.03	4,432.20
MPP	000429860	GASKET	LUBE OIL SYSTEM	5.00	EA	0.00	0.00
MPP	000429886	STRAINER	CYLINDER (FOR STRAINER MODEL 1554	3.00	EA	361.51	1,084.52
MPP	000429902	SWITCH	LUBE OIL SYSTEM	2.00	EA	350.65	701.30
MPP	000429928	GASKET	FUEL OIL & LUBE OIL FILTER	2.00	EA	0.00	0.00
MPP	000429944	GASKET	ROCKER ARM LUBE OIL	17.00	EA	0.00	0.00
MPP	000429969	RING	RETAINING, INTERNAL	2.00	EA	0.00	0.00
MPP	000429985	WIRE	CONDUCTOR	17.00	FT	5.90	100.30
MPP	000430009	RING	SNAP	2.00	EA	0.00	0.00
MPP	000430025	WIRE	CONDUCTOR	11.00	EA	0.95	10.45
MPP	000430041	RIVET	LUBE OIL SYSTEM	1.00	EA	0.00	0.00
MPP	000430066	RING	RETAINING, INTERNAL	2.00	EA	0.00	0.00
MPP	000430082	BOLT	LUBE OIL SYSTEM	3.00	EA	0.00	0.00
MPP	000430108	ROTOR ASSY	LUBE OIL SYSTEM	1.00	EA	0.00	0.00
MPP	000430124	PLATE	PRESSURE	1.00	EA	0.00	0.00
MPP	000430140	IDLER	LUBE OIL SYSTEM	1.00	EA	0.00	0.00
MPP	000430165	COVER	STRAINER	3.00	EA	37.46	112.37
MPP	000430181	BEARING	LUBE OIL SYSTEM	0.00	EA	7.24	0.00
MPP	000430207	BEARING	LUBE OIL SYSTEM	2.00	EA	8.97	17.94
MPP	000430223	ORING	LUBE OIL SYSTEM	33.00	EA	3.09	101.82
MPP	000430249	BEARING	LUBE OIL SYSTEM	2.00	EA	26.00	52.00
MPP	000430264	SEAL	OIL	4.00	EA	4.71	18.83
MPP	000430280	SEAL	OIL	6.00	EA	7.00	42.01
MPP	000430306	COUPLING	SPIDER, LOVEJOY	12.00	EA	26.28	315.36
MPP	000430322	COUPLING	SPIDER, LOVEJOY	6.00	EA	5.16	30.93
MPP	000430348	GASKET	HEAD	0.00	EA	4.66	0.00
MPP	000430363	COUPLING	SPIDER, LOVEJOY	5.00	EA	11.64	58.18
MPP	000430389	COUPLING	SPIDER	2.00	EA	8.95	17.90
MPP	000430405	SEAL	MECHANICAL	4.00	EA	76.04	304.15
MPP	000430421	ORING	RELIEF VALVE	17.00	EA	3.87	65.83
MPP	000430447	RING	SNAP, STEEL	6.00	EA	1.32	7.92
MPP	000430462	NUT	SELF-LOCKING, 1-1//8"	1.00	EA	8.32	8.32
MPP	000430488	SEAL	MECHANICAL	3.00	EA	18.97	56.91
MPP	000430504	BUSHING	IDLER - 1-1/2"	2.00	EA	107.28	214.57
MPP	000430520	ORING	STRAINER	22.00	EA	9.64	212.04
MPP	000430546	BUSHING	IDLER - 2"	5.00	EA	97.18	485.92
MPP	000430561	ORING	FULL-FLO & BY PASS	35.00	EA	9.21	322.35
MPP	000430587	PLATE	PRESSURE	1.00	EA	0.00	0.00
MPP	000430603	SEAL	MECHANICAL	3.00	EA	20.93	62.79
MPP	000430629	SEAL	MECHANICAL FUEL OIL TRANSFER PUMP	3.00	EA	43.74	131.21
MPP	000430645	GASKET	LUBE OIL SYSTEM	0.00	EA	0.06	0.00
MPP	000430660	ORING	FUEL OIL TRANSF. PUMP	5.00	EA	5.42	27.08
MPP	000430686	COIL	CONTROL RELAY	2.00	EA	21.65	43.30
MPP	000430702	GASKET	RELIEF VALVE	2.00	EA	0.47	0.94
MPP	000430728	NUT	SELF LOCKING HEX	2.00	EA	2.81	5.62
MPP	000430744	BUSHING	IDLER	3.00	EA	42.00	125.99
MPP	000430769	BEARING	BALL, FUEL OIL TRANSFER PUMP	0.00	EA	78.82	0.00
MPP	000430785	GASKET	HEAD	0.00	ST	0.47	0.00
MPP	000430801	BEARING	BALL, FUEL OIL TRANSFER PUMP	1.00	EA	15.04	15.04
MPP	000430827	PIN	IDLER, NITRALLOY	4.00	EA	5.20	20.80
MPP	000430843	BEARING	BALL	3.00	EA	67.58	202.75
MPP	000430868	CASING	BUSHING	6.00	EA	19.07	114.44
MPP	000430884	BEARING	BALL	4.00	EA	30.28	121.12
MPP	000430900	PIN	MOTOR SHAFT	9.00	EA	0.52	4.69
MPP	000430926	ORING	HEAD GASKET	7.00	EA	7.31	51.15
MPP	000430942	COUPLING	WITH SETSCREW	3.00	EA	36.46	109.37
MPP	000430967	ORING	(PRE-LUBE & KEEP WARM)	5.00	EA	3.30	16.48
MPP	000430983	BEARING	FLANGE, TYPE E SHAFT 2-11/16	2.00	EA	482.97	965.94
MPP	000431007	ELEMENT	THERMOSTAT	3.00	EA	62.50	187.50
MPP	000431023	SHEAVE, POWER WEDGE	5 GROOVES	2.00	EA	167.70	335.40

NOTE: SOH - Stock on Hand

Source: DARS 3342 Report (as of 5/31/07)

Maui Electric Company, Limited

MATERIALS PHYSICAL INVENTORY
MAALAEA POWER PLANT

WH	STOCK CODE	Item	Description	SOH	Unit	Price/ Unit	Total Cost/ Item
MPP	000431049	BUSHING	TAPER LOCK, 2-3/8"	1.00	EA	62.77	62.77
MPP	000431064	CLEVIS	FAN	0.00	EA	28.00	0.00
MPP	000431080	FAN BLADES	ALUMINUM S/N F13070	8.00	EA	612.46	4,899.69
MPP	000431106	HUB	8 BLADED ALUMINUM	0.00	EA	1,289.00	0.00
MPP	000431122	HUB	6 BLADED ALUMINUM	2.00	EA	1,543.44	3,086.88
MPP	000431122	HUB	6 BLADED ALUMINUM	2.00	EA	1,543.44	3,086.88
MPP	000431148	BELT	DAYCO, RADIATOR	2.00	EA	552.53	1,105.07
MPP	000431163	ELEMENT	RTD	0.00	EA	391.05	0.00
MPP	000431189	GASKET	SOFT IRON	1,190.00	EA	0.18	214.20
MPP	000431205	PLUGS	SHOULDER	24.00	EA	2.45	58.80
MPP	000431221	MOTOR	RADIATOR FAN	1.00	EA	4,514.60	4,514.60
MPP	000431247	INTERCOOLER	WATER SYSTEM	0.00	EA	14,032.21	0.00
MPP	000431262	GASKET	INTERCOOLER WATER SYS	4.00	EA	22.81	91.24
MPP	000431288	ELEMENT ASSY	170F	9.00	EA	90.41	813.69
MPP	000431304	ORING	INTERCOOLER WATER SYS	26.00	EA	0.36	9.36
MPP	000431320	ELEMENT ASSY	150 F	0.00	EA	90.41	0.00
MPP	000431346	CONNECTORS	4" NPS	3.00	EA	290.68	872.04
MPP	000431350	JOINT, EXPANSION, RUBBER	RUBBER, 5" X 5"	4.00	EA	150.84	603.36
MPP	000431361	CONNECTORS	5" NPS	1.00	EA	313.24	313.24
MPP	000431387	JOINT	EXPANSION	5.00	EA	825.19	4,125.95
MPP	000431403	CONNECTORS	8" NPS	2.00	EA	708.24	1,416.48
MPP	000431429	CONNECTION	HOSE, MALE, 1-1/4"	1.00	EA	0.00	0.00
MPP	000431445	ELEMENT ASSY	140 F	0.00	EA	135.52	0.00
MPP	000431460	DECTECTOR	TEMPERATURE, AMOT,	4.00	EA	119.83	479.32
MPP	000431486	FUSE ROD ASSY	INTERCOOLING WATER SYS	12.00	EA	31.23	374.76
MPP	000431502	CONNECTOR	HOSE, FEMALE, 1-1/4"	1.00	EA	0.00	0.00
MPP	000431528	GASKET	INTERCOOLING WATER SYS	8.00	EA	16.54	132.32
MPP	000431544	RING	PACKING	3.00	EA	27.89	83.67
MPP	000431569	SWITCH	PRESSURE	2.00	EA	37.50	74.99
MPP	000431585	MOTOR	C CASE BLOWER	1.00	EA	347.90	347.90
MPP	000431601	HOSE ASSY	AIR INTAKE SYS	2.00	EA	40.00	80.00
MPP	000431627	CONNECTOR	FLEXIBLE	3.00	EA	211.08	633.24
MPP	000431643	GASKET	(FOR INTER-COOLER)	6.00	EA	3.00	18.00
MPP	000431668	CONNECTOR	FLEXIBLE	1.00	EA	287.06	287.06
MPP	000431684	INSERT	PLASTIC	7.00	EA	8.01	56.07
MPP	000431700	VALVE	START (3 WAY SOLENOID)(CLOSED)	1.00	EA	196.77	196.77
MPP	000431726	KIT	REPAIR	2.00	EA	108.05	216.10
MPP	000431742	VALVE	STOP (3 WAY SOLENOID)(OPEN)	2.00	EA	325.67	651.34
MPP	000431767	KIT	REPAIR	1.00	EA	89.83	89.83
MPP	000431783	VALVE	3 WAY SOLENOID (CLOSED)	2.00	EA	223.94	447.88
MPP	000431809	KIT	REPAIR	1.00	EA	41.40	41.40
MPP	000431825	COIL	SOLENOID, (ASCO)	2.00	EA	76.36	152.72
MPP	000431841	KIT	REPAIR	2.00	EA	201.64	403.28
MPP	000431866	THERMOMETER	ASHCROFT, 0/250 F, 3" FACE DIAL W/ EVERY	2.00	EA	80.31	160.61
MPP	000431882	THERMOMETER	ASHCROFT (BI-METAL) w/ 6" STEM &	10.00	EA	84.43	844.26
MPP	000431908	THERMOMETER	ASHCROFT (BI-METAL)	1.00	EA	41.68	41.68
MPP	000431924	THERMOMETER, 5" BIMETAL	ASHCROFT (BI-METAL)	3.00	EA	93.03	279.09
MPP	000431940	SEAL	AIR, RADIATOR FAN	3.00	EA	255.20	765.60
MPP	000431965	BOLT	CRANKCASE TO FRAME	3.00	EA	25.00	75.00
MPP	000431981	CONTROL	LOAD SHARING & SPEED	0.00	EA	573.44	0.00
MPP	000432005	NUT	1/2" WHITWORTH	208.00	EA	3.84	798.16
MPP	000432021	LOCKWASHER	TURBOCHARGER	4.00	EA	14.69	58.76
MPP	000432047	NUT	CAP	8.00	EA	36.74	293.92
MPP	000432062	BUSH	TURBOCHARGER	1.00	EA	73.18	73.18
MPP	000432088	SCREW	HEX	8.00	EA	49.73	397.84
MPP	000432104	RING	SHRINK	3.00	EA	206.28	618.84
MPP	000432120	PLATE	LOCKING	2.00	EA	2.94	5.89
MPP	000432146	BUSH	SEAL WITH WING	1.00	EA	164.32	164.32
MPP	000432161	STUD	TURBOCHARGER	26.00	EA	4.62	120.12
MPP	000432187	BUSH	GUIDE	1.00	EA	207.35	207.35
MPP	000432203	SCREW	SOCKET	12.00	EA	24.11	289.32
MPP	000432229	BUSH	SEALING	0.00	EA	165.35	0.00
MPP	000432245	SCREW	HEX	14.00	EA	0.05	0.70
MPP	000432260	BUSH	SEALING	0.00	EA	150.07	0.00
MPP	000432286	LOCK-NUT	PAL	19.00	EA	0.04	0.76
MPP	000432302	BEARING ASSY	COMPLETE, COMPRESSOR END	2.00	EA	1,196.00	2,392.00
MPP	000432328	STUD	TURBOCHARGER	43.00	EA	4.71	202.53

NOTE: SOH - Stock on Hand

Source: DARS 3342 Report (as of 5/31/07)

Maui Electric Company, Limited

MATERIALS PHYSICAL INVENTORY
MAALAEA POWER PLANT

WH	STOCK CODE	Item	Description	SOH	Unit	Price/ Unit	Total Cost/ Item
MPP	000432344	BEARING ASSY	COMPLETE, TURBINE END	3.00	EA	1,529.75	4,589.25
MPP	000432369	NUT	TURBOCHARGER	33.00	EA	0.25	8.25
MPP	000432385	OIL PUMP	COMPLETE, COMPRESSOR END	2.00	EA	690.57	1,381.14
MPP	000432401	KEY	TURBOCHARGER	6.00	EA	21.05	126.30
MPP	000432427	OIL PUMP	COMPLETE, TURBINE END	2.00	EA	1,404.00	2,808.00
MPP	000432443	SCREW	(SOCKET HEAD) W/WASHER	20.00	EA	0.25	5.00
MPP	000432468	GASKET	GAUGE GLASS	5.00	EA	12.51	62.55
MPP	000432484	GASKET	COPPER	22.00	EA	0.27	5.94
MPP	000432500	GASKET	BEARING COVER	3.00	EA	29.12	87.36
MPP	000432526	PLATE	LOCKING, 25 X 18	24.00	EA	3.94	94.56
MPP	000432542	SCREW	HEX	4.00	EA	76.64	306.56
MPP	000432567	SCREW	HEX, M8 X 28	17.00	EA	2.27	38.59
MPP	000432583	GASKET	COPPER	8.00	EA	2.87	22.96
MPP	000432609	SCREW	HEX, M8 X 20	10.00	EA	1.04	10.40
MPP	000432625	STUD	TURBOCHARGER	80.00	EA	4.21	336.96
MPP	000432641	BOLT	TURBOCHARGER	10.00	EA	7.28	72.80
MPP	000432666	PLATE	LOCKING, 20 X 20	23.00	EA	2.35	54.05
MPP	000432682	PLATE	SECURING	16.00	EA	10.19	163.04
MPP	000432708	STUD	WHITWORTH THREAD, 1/2"	22.00	EA	4.95	108.81
MPP	000432724	BOLT	HEX HEAD	6.00	EA	12.48	74.88
MPP	000432740	BOLT	GUIDE	2.00	EA	31.81	63.62
MPP	000432765	SCREW	HEX	28.00	EA	1.89	52.92
MPP	000432781	WASHER	LOCK	2.00	EA	5.00	10.00
MPP	000432807	STUD	TURBOCHARGER	32.00	EA	3.03	96.96
MPP	000432823	BOLT	TURBOCHARGER	23.00	EA	18.46	424.58
MPP	000432849	RING	COVER	1.00	EA	2,629.91	2,629.91
MPP	000432864	SCREW	SOCKET	8.00	EA	4.42	35.36
MPP	000432880	SWITCH	W2	2.00	EA	147.58	295.15
MPP	000432906	CONNECTOR	ELECTRICAL	3.00	EA	1.56	4.68
MPP	000432922	NAMEPLATE	ELECTRICAL	1.00	EA	13.99	13.99
MPP	000432948	INDICATOR	TACHOMETER	2.00	EA	315.57	631.14
MPP	000432963	ANNUNCIATOR	RONAN	3.00	EA	436.60	1,309.80
MPP	000432989	ANNUNCIATOR	ALARM	2.00	EA	1,443.00	2,886.00
MPP	000433003	WATTMETER	ENGINE PANEL	1.00	EA	120.00	120.00
MPP	000433029	RELAY	TIME DELAY, 0-300 SEC	4.00	EA	124.63	498.52
MPP	000433045	RELAY	TIME DELAY, 0-60 SEC	2.00	EA	127.18	254.36
MPP	000433060	SWITCH	SELECTOR	3.00	EA	215.36	646.09
MPP	000433065	CHARTS, FREQUENCY	FOR M-8 PANEL, CENTRAL CONTROL	24.00	EA	15.57	373.65
MPP	000433068	CHARTS, TIME DEVIATION	FOR M-8 CENTRAL CONTROL PANEL	30.00	EA	15.43	463.03
MPP	000433086	BLADE	FAN, GENERATOR	1.00	EA	20.00	20.00
MPP	000433102	TUBE	ENGINE PANEL	4.00	EA	15.00	60.00
MPP	000433128	HEATER	ELEC. COIL	6.00	EA	3.65	21.90
MPP	000433144	HEATER	ELEC. COIL	8.00	EA	6.00	48.00
MPP	000433169	HEATER	ELEC. COIL	6.00	EA	8.63	51.75
MPP	000433185	HEATER	ELEC. COIL	9.00	EA	3.40	30.60
MPP	000433201	HEATER	ELEC. COIL	4.00	EA	3.40	13.60
MPP	000433227	HEATER	ELEC. COIL H 30	3.00	EA	3.40	10.20
MPP	000433243	HEATER	ELEC. COIL H 38	6.00	EA	3.88	23.28
MPP	000433268	HORN	DIAPHRAGM, NO. 55	2.00	EA	9.72	19.44
MPP	000433284	BELL	MECHANISM, 120VAC	2.00	EA	456.55	913.10
MPP	000433300	HORN	RESONATING, NO. 55	8.00	EA	454.97	3,639.74
MPP	000433326	CONTACT	HORN	1.00	EA	38.07	38.07
MPP	000433342	DRIVER	GAITRONICS	4.00	EA	97.52	390.06
MPP	000433367	CAPACITOR	CODE SYSTEM	0.00	EA	26.06	0.00
MPP	000433383	COIL	ARMATURE, 120 VAC	3.00	EA	13.50	40.50
MPP	000433409	FUSE	EXCITER, A25 X 150	4.00	EA	4.12	16.48
MPP	000433425	DIODE	ENGINE PANEL	4.00	EA	8.24	32.96
MPP	000433441	SWITCH	ROTARY	2.00	EA	10.00	20.00
MPP	000433466	SWITCH	ROTARY	2.00	EA	10.00	20.00
MPP	000433482	RELAY	WESTINGHOUSE	2.00	EA	40.00	80.00
MPP	000433508	WELL	THERMOSTAT, BRASS 3-1/2"	13.00	EA	103.93	1,351.03
MPP	000433524	BLOCK	CONTACT	1.00	EA	20.80	20.80
MPP	000433540	WELL	THERMOMETER 6" OAL	3.00	EA	27.91	83.74
MPP	000433565	COIL	CONTROL RELAY	2.00	EA	0.00	0.00
MPP	000433581	FUSE	BUSS	19.00	EA	0.94	17.86
MPP	000433607	FUSE	BUSS	10.00	EA	0.87	8.70
MPP	000433623	MICROSWITCH	SELECTOR (PUSH OPERATOR INDICATOR)	1.00	EA	136.86	136.86

NOTE: SOH - Stock on Hand

Source: DARS 3342 Report (as of 5/31/07)

Maui Electric Company, Limited

MATERIALS PHYSICAL INVENTORY
MAALAEA POWER PLANT

WH	STOCK CODE	Item	Description	SOH	Unit	Price/ Unit	Total Cost/ Item
MPP	000433649	MICROSWITCH	PUSH OPERATOR	2.00	EA	135.78	271.56
MPP	000433664	MICROSWITCH	INDICATOR MODULE	3.00	EA	140.79	422.36
MPP	000433680	MICROSWITCH	INDICATOR MODULE	1.00	EA	96.20	96.20
MPP	000433706	MICROSWITCH	INDICATOR MODULE	1.00	EA	159.55	159.55
MPP	000433722	MICROSWITCH	INDICATOR MODULE	1.00	EA	159.55	159.55
MPP	000433748	SWITCH	ENGINE PANEL	2.00	EA	192.74	385.48
MPP	000433763	MICROSWITCH	INDICATOR MODULE	1.00	EA	251.55	251.55
MPP	000433789	BREAKER	AIR CIRCUIT	1.00	EA	13,011.44	13,011.44
MPP	000433805	SWITCH	SB-1	2.00	EA	0.00	0.00
MPP	000433821	MICROSWITCH	ENG. PANEL	3.00	EA	56.39	169.17
MPP	000433847	DIODES	POWER	6.00	EA	64.29	385.74
MPP	000433862	HEATER	COIL-CUTLER HAMMER	3.00	EA	3.40	10.20
MPP	000433888	HEATER	COIL-CUTLER HAMMER	3.00	EA	9.42	28.25
MPP	000433904	HEATER	COIL-CUTLER HAMMER	3.00	EA	12.48	37.43
MPP	000433920	HEATER	COIL-CUTLER HAMMER	6.00	EA	3.88	23.28
MPP	000433946	HEATER	COIL-CUTLER HAMMER	15.00	EA	0.69	10.35
MPP	000433961	HEATER	COIL-CUTLER HAMMER	3.00	EA	3.40	10.20
MPP	000433987	COIL	MP-C-015-ASCO	0.00	EA	17.86	0.00
MPP	000434001	LIMITER	FUEL, 2301	0.00	EA	532.75	0.00
MPP	000434027	ELEMENT	FUEL OIL FILTER	29.00	EA	40.36	1,170.30
MPP	000434043	ELEMENT	FULL FLO LUBE OIL FILTER	0.00	EA	36.71	0.00
MPP	000434068	ELEMENT	BYPASS LUBE OIL FILTER	22.00	EA	59.66	1,312.52
MPP	000434084	ELEMENT	ROCKER ARM LUBE OIL	50.00	EA	29.14	1,456.81
MPP	000434100	SPINDLE	NUGENT FILTER *	3.00	EA	129.69	389.07
MPP	000434126	TOGGLE	NUGENT FILTER *	6.00	EA	69.40	416.40
MPP	000434142	GASKET	COVER	4.00	EA	248.61	994.44
MPP	000434167	ORING	FILTER *	6.00	EA	13.87	83.24
MPP	000434183	ORING	FILTER *	8.00	EA	3.37	26.96
MPP	000434209	GASKET	NUGENT FILTER *	3.00	EA	1.97	5.91
MPP	000434225	L-SEAL	NUGENT FILTER *	8.00	EA	21.36	170.87
MPP	000434241	PAWL	NUGENT FILTER *	0.00	EA	13.54	0.00
MPP	000434266	SPRING	PAWL	0.00	EA	9.39	0.00
MPP	000434282	CORSET KIT	NUGENT FILTER *	8.00	EA	50.55	404.40
MPP	000434308	WASHER	TOGGLE	6.00	EA	28.44	170.64
MPP	000434324	PRESSURE GAUGE ASSY	NUGENT FILTER *	2.00	EA	513.20	1,026.40
MPP	000434340	CAPACITOR	TANTALUM	0.00	EA	21.32	0.00
MPP	000434365	GOVERNOR	WOODWARD	1.00	EA	13,753.03	13,753.03
MPP	000434381	RESISTOR	VOLTAGE REGULATOR	2.00	EA	15.60	31.20
MPP	000434407	SPRING	TOGGLE	6.00	EA	5.00	30.00
MPP	000434423	LEVER	WOODWARD FILTER	8.00	EA	33.90	271.20
MPP	000434449	BAR	FULCRUM	3.00	EA	45.50	136.50
MPP	000434464	SPINDLE	TOGGLE	3.00	EA	12.74	38.22
MPP	000434480	BEARING	TOP	4.00	EA	45.00	180.01
MPP	000434506	BEARING	BOTTOM	6.00	EA	31.61	189.67
MPP	000434522	PIN	ROLL	6.00	EA	0.27	1.62
MPP	000434548	PIN	ROLL	3.00	EA	0.27	0.81
MPP	000434563	BELT	GRIPNOTCH	1.00	EA	13.54	13.54
MPP	000434589	BUSHING	GENERATOR	1.00	EA	5.80	5.80
MPP	000434605	SHEAVE	GENERATOR	2.00	EA	21.24	42.48
MPP	000434621	BELT	GATES	3.00	EA	82.21	246.64
MPP	000434647	SHEAVE	QD, MULTI-DUTY GATES	1.00	EA	43.66	43.66
MPP	000434662	BUSHING	QD, VULCOMOUNT GATES	1.00	EA	12.37	12.37
MPP	000434688	PICK-UP	MAGNETIC, SIGNAL	4.00	EA	177.90	711.60
MPP	000434704	TUBE	STUD PROTECTOR	0.00	EA	168.66	0.00
MPP	000434720	GEAR	FUEL PUMP CONTROL	0.00	EA	89.07	0.00
MPP	000434746	VALVE	AIR COMPRESSOR	8.00	EA	6.32	50.56
MPP	000434761	BELT	DAYCO	7.00	EA	14.07	98.49
MPP	000434787	GASKET	AIR COMPRESSOR	7.00	EA	0.00	0.00
MPP	000434803	VALVE	AIR COMPRESSOR	8.00	EA	13.18	105.44
MPP	000434829	SPRING	VALVE SEAT, SINGLE GROOVE	24.00	EA	2.61	62.64
MPP	000434845	GASKET	AIR COMPRESSOR	12.00	EA	0.00	0.00
MPP	000434860	SPRING	VALVE	16.00	EA	3.24	51.84
MPP	000434886	VALVE ASSY	EXHAUST, LOW PRESSURE	1.00	EA	0.00	0.00
MPP	000434902	VALVE ASSY	EXHAUST, HIGH PRESSURE	1.00	EA	0.00	0.00
MPP	000434928	KIT	GASKET	1.00	EA	64.62	64.62
MPP	000434944	GASKET	AIR COMPRESSOR	12.00	EA	0.00	0.00
MPP	000434969	STUD	MAIN BEARING	1.00	EA	11.49	11.49

NOTE: SOH - Stock on Hand

Source: DARS 3342 Report (as of 5/31/07)

Maui Electric Company, Limited

MATERIALS PHYSICAL INVENTORY
MAALAEA POWER PLANT

WH	STOCK CODE	Item	Description	SOH	Unit	Price/ Unit	Total Cost/ Item
MPP	000434985	NUT	MAIN BRG STUD 1-1/4-12 SLOTTED HD-UPR	2.00	EA	3.92	7.84
MPP	000435008	NUT	MAIN BRG STUD 1-1/4-12 HEX LWR	2.00	EA	1.93	3.86
MPP	000435024	BOLT	HEX HD, 1/4-20	12.00	EA	0.07	0.84
MPP	000435040	NUT	SELF LOCKING, 1/4 -20	12.00	EA	0.02	0.24
MPP	000435065	INSERT	LOWER LINER	70.00	EA	43.46	3,042.02
MPP	000435081	ORING	AIR BOX DRAIN	0.00	EA	0.00	0.00
MPP	000435107	GASKET	HANDHOLE COVER TO CRANKCASE	11.00	EA	1.57	17.22
MPP	000435123	GASKET	STUD	20.00	EA	0.15	3.00
MPP	000435149	GASKET	HAND WHEEL, NYLON	118.00	EA	0.17	19.80
MPP	000435164	SEAL	TEST VALVE	55.00	EA	1.59	87.45
MPP	000435180	ORING	SEAL, VALVE SEAT	37.00	EA	22.27	823.99
MPP	000435206	CROSSBAR ASSY	COVER	1.00	EA	10.36	10.36
MPP	000435222	ORING	SEAL, HANDWHEEL	15.00	EA	0.83	12.48
MPP	000435248	VALVE	NEEDLE	1.00	EA	5.03	5.03
MPP	000435263	VALVE	CYLINDER TEST	14.00	EA	111.10	1,555.40
MPP	000435289	PIN	RETAINING, 1/8" X 5/8"	328.00	EA	0.01	3.28
MPP	000435305	COVER ASM	HAND HOLE	3.00	EA	57.06	171.18
MPP	000435321	NUT	PACKING	16.00	EA	1.28	20.48
MPP	000435347	HEAD ASM	CYLINDER	4.00	EA	1,316.72	5,266.89
MPP	000435347	HEAD ASM	CYLINDER	4.00	EA	1,316.72	5,266.89
MPP	000435362	GREASE	SILICON, 8 OZ. TUBE	83.00	EA	19.51	1,619.06
MPP	000435388	STUD	ROCKER ARM SHAFT 1-8" X 1-14" X 7-3/4 L	6.00	EA	3.26	19.56
MPP	000435404	LINER ASM	CYLINDER, CAST IRON-LINER BORE	0.00	EA	1,198.11	0.00
MPP	000435420	GUIDE	EXHAUST VALVE	24.00	EA	3.20	76.80
MPP	000435446	VALVE	EXHAUST	38.00	EA	30.81	1,170.78
MPP	000435461	SPRING	EXHAUST VALVE	12.00	EA	1.19	14.28
MPP	000435487	LOCK	VALVE SEAT, SINGLE GROOVE	60.00	EA	1.32	79.20
MPP	000435503	SEAT	SPRING	11.00	EA	1.40	15.40
MPP	000435529	SEAL	O-RING, WATER OUTLET TO CRANKCASE	125.00	EA	0.58	72.50
MPP	000435545	SEAL	O-RING, ELBOW TO HEAD	83.00	EA	0.38	31.54
MPP	000435560	SEAL	LINER, TOP GROOVE	12.00	EA	1.67	20.02
MPP	000435586	SEAL	LINER, LOWER GROOVE	4.00	EA	0.00	0.00
MPP	000435602	GASKET	JUMPER LINE TO WATER MANIFOLD	6.00	EA	1.26	7.57
MPP	000435628	BEARING	INSERT - CARRIER	12.00	EA	482.05	5,784.55
MPP	000435644	BOLT ASM	HEX HEAD, 5/8-18 X 1-3/4	107.00	EA	2.32	248.24
MPP	000435669	BOLT	HEX HEAD, 1/2-20 X 2-3/4	98.00	EA	1.29	126.42
MPP	000435685	NUT	LOCK, 1/2-20 HEX	82.00	EA	0.44	36.08
MPP	000435701	WASHER	SPECIAL	182.00	EA	0.40	72.80
MPP	000435727	SHAFT	ROCKER ARM	5.00	EA	33.82	169.10
MPP	000435743	GASKET	CORK, COVER PLATE	24.00	EA	0.88	21.12
MPP	000435768	SUPPORT ASM	SHAFT	17.00	EA	16.97	288.49
MPP	000435784	PIN	CAM FOLLOWER	10.00	EA	2.05	20.50
MPP	000435800	WASHER	HARDENED, SPECIAL	34.00	EA	0.47	15.98
MPP	000435826	RACE	INNER	12.00	EA	6.98	83.76
MPP	000435842	ARM ASM	ROCKER, EXHAUST	10.00	EA	124.47	1,244.74
MPP	000435867	ROLLER	CAM FOLLOWER	0.00	EA	10.39	0.00
MPP	000435883	CAP	SUPPORT	12.00	EA	6.50	78.00
MPP	000435909	BUSHING	FLOATING	12.00	EA	4.99	59.88
MPP	000435925	NUT	1-14 HEX	0.00	EA	0.59	0.00
MPP	000435941	ARM ASSY	ROCKER, INJECTOR	7.00	EA	113.74	796.21
MPP	000435966	SCREW	ADJUSTING	0.00	EA	12.93	0.00
MPP	000435982	PIN	GROOVE, 1/8 X 7/8 IN	10.00	EA	0.09	0.90
MPP	000436006	NUT	LOCK, 5/8-18 HEX	16.00	EA	0.38	6.08
MPP	000436022	SPRING	BUTTON, RETAINING	30.00	EA	2.42	72.60
MPP	000436048	BUTTON	INJECTOR	5.00	EA	3.11	15.55
MPP	000436063	BRIDGE ASM	EXHAUST VALVE	12.00	EA	83.45	1,001.36
MPP	000436089	ADJUSTER ASM	HYDRAULIC	3.00	EA	4.71	14.13
MPP	000436105	OIL LINE	ROCKER ARM	8.00	EA	9.73	77.84
MPP	000436121	POWER PACK	FORK	0.00	EA	5,160.62	0.00
MPP	000436147	POWER PACK	BLADE	1.00	EA	4,676.96	4,676.96
MPP	000436162	WASHER	FLAT, 3/4 HARDENED	10.00	EA	0.32	3.20
MPP	000436188	SEAL KIT	CYLINDER HEAD TO LINER	6.00	EA	5.02	30.12
MPP	000436220	BOLT	CYL HEAD CRAB 1-3/4-12 X 15-5/8	12.00	EA	73.37	880.44
MPP	000436246	BOLT	BRACKET, 3/8-24 X 3	5.00	EA	0.14	0.70
MPP	000436261	RING	CYLINDER SEAT	36.00	EA	41.87	1,507.29
MPP	000436287	NUT	SPLINE, 3/8 - 24	8.00	EA	0.29	2.32
MPP	000436303	CRAB	INJECTOR	2.00	EA	18.74	37.48

NOTE: SOH - Stock on Hand

Source: DARS 3342 Report (as of 5/31/07)

Maui Electric Company, Limited

MATERIALS PHYSICAL INVENTORY
MAALAEA POWER PLANT

WH	STOCK CODE	Item	Description	SOH	Unit	Price/ Unit	Total Cost/ Item
MPP	000436329	CRAB	CYLINDER HEAD, INTERMEDIATE	1.00	EA	18.77	18.77
MPP	000436345	CRAB	CYLINDER HEAD, END	1.00	EA	17.33	17.33
MPP	000436360	BRACKET	CRAB BOLT	6.00	EA	2.23	13.38
MPP	000436386	NUT	F.O. INJECTOR CRAB, 5/8 - 18 HEX	2.00	EA	0.13	0.26
MPP	000436402	NUT	HEAD TO LINER, 3/4-16 HEX	25.00	EA	1.27	31.81
MPP	000436428	NUT	1-3/4 SPHERICAL SEAT CRAB STUD	2.00	EA	10.47	20.94
MPP	000436444	WASHER	INJECTOR CRAB, 3/4 ID X 1-1/4OD	7.00	EA	0.22	1.54
MPP	000436469	BEARING	NEEDLE	9.00	EA	2.35	21.17
MPP	000436485	OIL SEAL	GARLOCK, 63X0294	3.00	EA	6.02	18.05
MPP	000436501	BEARING	NEEDLE, BUSHING	8.00	EA	1.93	15.44
MPP	000436527	LEVER	INJECTOR CONTROL SHAFT	1.00	EA	10.48	10.48
MPP	000436543	WASHER	PLAIN, 3/8	82.00	EA	0.01	0.82
MPP	000436568	BOLT	SHAFT LEVER MTG 3/8-24 X 2 HEX HD	93.00	EA	0.17	15.81
MPP	000436584	GASKET	OIL SEAL	3.00	EA	4.17	12.51
MPP	000436600	NUT	LOCK, 3/8-24 HEX	11.00	EA	0.23	2.49
MPP	000436626	LEVER ASM	INJECTOR CONTROL SHAFT, MANUAL, R.B.	3.00	EA	118.11	354.33
MPP	000436642	PIN	CLEVIS, 1/4 X 1-1/8 IN LONG	6.00	EA	0.48	2.88
MPP	000436667	RETAINER	SPRING, 3/16 DIA. GROOVE	444.00	EA	0.04	17.76
MPP	000436683	BEARING	BALL	1.00	EA	23.37	23.37
MPP	000436709	RING	SNAP, BEARING RETAINER	8.00	EA	0.21	1.68
MPP	000436725	NUT	LOCK, 5/16 - 24	197.00	EA	0.08	15.76
MPP	000436741	BOLT	LINK MTG 5/16-24 X 1-17/32 HEX HD	9.00	EA	8.20	73.76
MPP	000436766	RETAINER	SPRING 7/16 DIA GROOVE	39.00	EA	0.04	1.56
MPP	000436782	PIN	CLEVIS 1/2 X 1-3/32 IN LONG	4.00	EA	0.57	2.28
MPP	000436808	LEVER ASM	INJECTOR CONTROL SHAFT	3.00	EA	131.51	394.53
MPP	000436824	PIN	TAPER, NO. 4 X 2 IN LONG	11.00	EA	0.17	1.87
MPP	000436840	RETAINER ASM	OIL SEAL	3.00	EA	13.76	41.28
MPP	000436865	LEVER ASM	GOVERNOR TO CONTROL ROD	2.00	EA	267.21	534.42
MPP	000436881	BEARING	BALL	13.00	EA	21.55	280.09
MPP	000436907	LINK ASSY	CONTROL ROD (RIGHT BANK)	1.00	EA	184.45	184.45
MPP	000436923	LINK ASSY	CONTROL ROD (LEFT	3.00	EA	204.42	613.26
MPP	000436949	LINK ASSY	ADJUSTING	6.00	EA	55.74	334.45
MPP	000436964	LEVER ASSY	INJECTOR CONTROL	4.00	EA	89.82	359.28
MPP	000436980	BEARING	INJECTOR CONTROL SHAFT	40.00	EA	2.81	112.40
MPP	000437004	KIT	SHAFT	0.00	EA	289.48	0.00
MPP	000437020	SHAFT KIT	INJECTOR CONTROL	0.00	EA	120.33	0.00
MPP	000437046	BOLT	HEX, 1/4-28 X 3/4	88.00	EA	0.08	7.04
MPP	000437061	SPRING	BUTTON, RETAINING	37.00	EA	0.39	14.43
MPP	000437087	RING SET	PISTON, IRON BORE	18.00	EA	121.95	2,195.10
MPP	000437103	PISTON	BARE, STANDARD	0.00	EA	328.24	0.00
MPP	000437129	PISTON ASSY	ENGINE, INCL RINGS	0.00	EA	303.29	0.00
MPP	000437145	WASHER	THRUST CARRIER	23.00	EA	17.62	405.26
MPP	000437160	DOWEL	BASKET TO ROD .3125 DIA X 3/16"	2.00	EA	0.68	1.36
MPP	000437186	PIN	PISTON	26.00	EA	117.36	3,051.36
MPP	000437202	RING	SNAP CARRIER	9.00	EA	1.63	14.67
MPP	000437228	ROD	CONNECTING - BLADE	0.00	EA	313.54	0.00
MPP	000437244	ROD	CONNECTING - FORK	4.00	EA	670.76	2,683.04
MPP	000437269	BEARING	INSERT - CARRIER	18.00	EA	421.84	7,593.12
MPP	000437285	BEARING	INSERT - CARRIER	3.00	EA	149.92	449.76
MPP	000437301	CARRIER	PISTON	6.00	EA	137.10	822.60
MPP	000437327	BOLT ASM	PISTON PIN - INCL	18.00	EA	2.94	52.92
MPP	000437343	BEARING	LOWER - CONNECTING ROD	3.00	EA	183.94	551.83
MPP	000437368	BEARING	UPPER - CONNECTING ROD	20.00	EA	295.54	5,910.74
MPP	000437384	KIT	UPPER MAIN BEARING - STANDARD I.D.	2.00	EA	1,226.62	2,453.24
MPP	000437400	KIT	LOWER MAIN BEARING - STANDARD I.D.	1.00	EA	1,742.62	1,742.62
MPP	000437426	BEARING	MAIN - CENTER - LOWER STANDARD	2.00	EA	111.50	223.00
MPP	000437442	BEARING	MAIN - CENTER - UPPER STANDARD	1.00	EA	49.25	49.25
MPP	000437467	BEARING	MAIN-FRONT & INTERMEDIATE-LOWER	1.00	EA	44.98	44.98
MPP	000437483	BEARING	MAIN-FRONT & INTERMEDIATE-UPPER	2.00	EA	78.41	156.82
MPP	000437509	BEARING	MAIN - REAR - LOWER - STD	1.00	EA	126.87	126.87
MPP	000437525	BEARING	MAIN - REAR - UPPER - STD	1.00	EA	96.48	96.48
MPP	000437541	COLLAR	THRUST STANDARD	12.00	EA	44.97	539.64
MPP	000437566	DOWEL	.005 O.S. 1.000 DIA X 2-1/4 IN.	8.00	EA	2.69	21.52
MPP	000437582	BOLT	HEX HEAD 1/2-20 X 7/8	24.00	EA	0.00	0.00
MPP	000437608	DAMPER ASM	GEAR	1.00	EA	3,240.51	3,240.51
MPP	000437624	SPRING	COIL	16.00	EA	2.57	41.12
MPP	000437640	SEGMENT	SPRING	32.00	EA	20.36	651.52

NOTE: SOH - Stock on Hand

Source: DARS 3342 Report (as of 5/31/07)

Maui Electric Company, Limited

MATERIALS PHYSICAL INVENTORY
MAALAEA POWER PLANT

WH	STOCK CODE	Item	Description	SOH	Unit	Price/ Unit	Total Cost/ Item
MPP	000437665	JOINT	CENTER BONDED, RUBBER BUSHING	16.00	EA	9.32	149.09
MPP	000437681	SEAL	OIL, ACCESS. DRIVE	8.00	EA	0.00	0.00
MPP	000437707	BOLT	HEX HD, 1/2-20 X 1	19.00	EA	0.00	0.00
MPP	000437723	BRACKET ASM	STARTER MOTOR	1.00	EA	1,073.37	1,073.37
MPP	000437749	BOLT	SHOULDER 3/4-16 X 2-7/8 HEX HD	2.00	EA	24.05	48.11
MPP	000437764	WASHER	PLAIN - 3/4	8.00	EA	0.34	2.71
MPP	000437780	BOLT	HEX HD, 5/8-18 X 1-3/4	16.00	EA	0.89	14.24
MPP	000437806	WASHER	LOCK - 5/8	16.00	EA	0.19	3.10
MPP	000437822	WASHER	HARDENED, 5/8	8.00	EA	0.71	5.67
MPP	000437848	MOTOR ASM	AIR STARTER, 64 VOLTS	6.00	EA	1,385.74	8,314.44
MPP	000437863	BUSHING	DRIVE HOUSING	10.00	EA	3.51	35.10
MPP	000437889	BOOT	PLUNGER	1.00	EA	3.28	3.28
MPP	000437905	CONTACTOR	STARTING, ST	4.00	EA	1,102.93	4,411.72
MPP	000437921	BOLT	BRACKET TO MOTOR 5/8-18 X 2-1/2 HEX HD	7.00	EA	0.88	6.14
MPP	000437947	ORING	LEVER HOUSING	2.00	EA	0.91	1.82
MPP	000437962	NUT	LOCK, 5/8-18 HEX	15.00	EA	0.40	6.04
MPP	000437988	SEAL	OIL	2.00	EA	1.38	2.76
MPP	000438002	INDICATOR	FLYWHEEL	1.00	EA	153.05	153.05
MPP	000438028	GASKET	DRIVE HOUSING MOUNTING	2.00	EA	0.32	0.64
MPP	000438044	BOLT	INDICATOR MTG 1/4-20 X 5/8 HEX HD	2.00	EA	0.06	0.13
MPP	000438069	BRUSH ASM	MOTOR	43.00	EA	2.51	107.93
MPP	000438085	WASHER	LOCK - 1/4	2.00	EA	0.13	0.27
MPP	000438101	CLUTCH ASM	DRIVE	1.00	EA	77.59	77.59
MPP	000438127	SPRING	BRUSH	6.00	EA	0.15	0.90
MPP	000438143	CONTACTOR	STARTING, STZ	2.00	EA	1,030.90	2,061.80
MPP	000438168	GASKET	RETAINING PLUG	2.00	EA	0.05	0.10
MPP	000438184	FUSE	350A, 250 VOLT	4.00	EA	121.04	484.14
MPP	000438200	GASKET	COMMUTATOR END	0.00	EA	0.08	0.00
MPP	000438226	RESISTOR	.560 OHMS	2.00	EA	289.96	579.92
MPP	000438242	BRACKET	RESISTOR MOUNTING	4.00	EA	20.62	82.48
MPP	000438267	SHIM	OIL SLINGER (.010)	1.00	EA	0.00	0.00
MPP	000438283	SHIM	OIL SLINGER (.030)	1.00	EA	0.00	0.00
MPP	000438309	SHIM	OIL SLINGER (.021)	1.00	EA	3.00	3.00
MPP	000438325	SEGMENT	CAMSHAFT	2.00	EA	710.54	1,421.08
MPP	000438341	SEGMENT	CAMSHAFT	2.00	EA	472.48	944.96
MPP	000438366	BEARING	SHELL, BLOCK, UPPER & LOWER HALF	110.00	EA	3.33	366.47
MPP	000438382	BEARING	SHELL, UPPER & LOWER HALF ACCESS. END	24.00	EA	7.12	170.93
MPP	000438408	BEARING	SHELL, UPPER & LOWER	26.00	EA	14.52	377.62
MPP	000438424	NUT	SPLINE, 3/8-24 X 7/32	26.00	EA	2.09	54.34
MPP	000438440	NUT	SPLINE, 3/8-24 X 3/8	43.00	EA	0.00	0.00
MPP	000438465	SEAL	OIL .625ID X 1.129OD	1.00	EA	11.14	11.14
MPP	000438481	GASKET	COVER PLATE, CORK	12.00	EA	0.96	11.52
MPP	000438507	GASKET	FLANGE	19.00	EA	0.16	3.04
MPP	000438523	SEAL	OIL, .875ID X 1.503OD	6.00	EA	2.01	12.06
MPP	000438549	SWITCH	OVERSPEED TRIP LIMIT	3.00	EA	218.13	654.39
MPP	000438564	GASKET	COVER PLATE	9.00	EA	6.28	56.52
MPP	000438580	COUPLING	FLEXIBLE, DRIVE HALF	3.00	EA	23.85	71.55
MPP	000438606	TRIP	CAM	2.00	EA	677.21	1,354.42
MPP	000438622	ADAPTER	COUPLING, MOUNTED TO CAMSHAFT	2.00	EA	98.92	197.84
MPP	000438648	LEVER	TRIP	2.00	EA	247.27	494.54
MPP	000438663	NUT	LOCK, 1/4 - 28 HEX	25.00	EA	0.03	0.75
MPP	000438689	CONTACT	MOVABLE	0.00	EA	71.14	0.00
MPP	000438705	PICK-UP	POWER, 200 OHMS	3.00	EA	116.26	348.77
MPP	000438721	BRUSH	ENGINE SHUTDOWN, ELEC. OPERATED	4.00	EA	3.70	14.80
MPP	000438747	SPIDER	FLEXIBLE COUPLING	7.00	EA	39.07	273.46
MPP	000438762	BEARING	NEEDLE, (ND)	4.00	EA	14.49	57.96
MPP	000438788	GENERATOR	FREQUENCY, SINGLE POWER	1.00	EA	637.73	637.73
MPP	000438804	GASKET	GENERATOR MOUNTING	2.00	EA	1.37	2.74
MPP	000438820	SOLENOID	SHUTDOWN	2.00	EA	702.47	1,404.94
MPP	000438846	GASKET	ELBOW TO PRESS. PUMP	32.00	EA	2.88	92.08
MPP	000438861	GASKET	MANIFOLD, T/C FILTER MTG TO CAMSHAFT	22.00	EA	0.58	12.76
MPP	000438887	GASKET	OIL LINE TO CAMSHAFT BLOCK	101.00	EA	0.02	2.02
MPP	000438903	GASKET	TUBE ASSY TO FILTER	26.00	EA	0.22	5.72
MPP	000438929	GASKET	VALVE MOUNTING	1.00	EA	0.82	0.82
MPP	000438945	GASKET	FILTER MOUNTING	29.00	EA	0.92	26.67
MPP	000438960	NUT	LOCK 3/8-24NF	1.00	EA	0.17	0.17
MPP	000438986	NUT	LOCK 1/2-20 HEX	38.00	EA	0.00	0.00

NOTE: SOH - Stock on Hand

Source: DARS 3342 Report (as of 5/31/07)

Maui Electric Company, Limited

MATERIALS PHYSICAL INVENTORY
MAALAEA POWER PLANT

WH	STOCK CODE	Item	Description	SOH	Unit	Price/ Unit	Total Cost/ Item
MPP	000439000	VALVE ASM	RELIEF	2.00	EA	668.51	1,337.02
MPP	000439026	RING	RETAINER	2.00	EA	0.14	0.28
MPP	000439042	SEAL	CHECK VALVE	40.00	EA	0.65	26.00
MPP	000439067	VALVE	CHECK, TURBOCHARGER FILTER	1.00	EA	59.59	59.59
MPP	000439083	SEAL	SOAK BACK FILTER	92.00	EA	0.17	15.64
MPP	000439109	VALVE	CHECK - SOAK BACK FILTER	1.00	EA	14.75	14.75
MPP	000439125	ORING	COVER, TURBOCHARGER FILTER	25.00	EA	3.93	98.19
MPP	000439141	WASHER	LOCK, 5/16"	103.00	EA	0.65	66.95
MPP	000439166	ORING	GRID SWITCH	9.00	EA	6.89	62.01
MPP	000439182	BOLT	(PEE PIPE) 5/16-18 X 1-1/8 HEX	28.00	EA	0.03	0.84
MPP	000439208	BOLT	(PEE PIPE) 5/16-24 X 1 HEX	38.00	EA	0.08	3.04
MPP	000439224	GASKET	TUBE TO MANIFOLD	6.00	EA	0.30	1.80
MPP	000439240	TUBE	PISTON COOLING OIL	10.00	EA	87.25	872.54
MPP	000439265	GASKET	LUBE OIL STRAINER	4.00	EA	0.00	0.00
MPP	000439281	SCREEN	STRAINER, PERFORATED METAL	2.00	EA	110.32	220.64
MPP	000439307	SCREEN ASM	STRAINER	1.00	EA	103.64	103.64
MPP	000439323	PUMP ASM	PISTON COOLING & PRESS	0.00	EA	564.73	0.00
MPP	000439349	GASKET	PUMP COVER	9.00	EA	5.07	45.63
MPP	000439364	GASKET	PUMP BODY TO SPACER	18.00	EA	3.97	71.46
MPP	000439380	BUSHING	OIL PUMP BODY	1.00	EA	0.00	0.00
MPP	000439406	KEY	WOODRUFF	5.00	EA	0.00	0.00
MPP	000439422	BUSHING	OIL PUMP BODY	1.00	EA	0.00	0.00
MPP	000439448	BUSHING	FUEL PUMP BRACKET	4.00	EA	22.07	88.28
MPP	000439463	SEAL	OIL	4.00	EA	1.95	7.80
MPP	000439489	PUMP ASM	LUBE OIL SCAVENGING & FUEL	1.00	EA	872.72	872.72
MPP	000439505	PUMP ASM	FUEL	4.00	EA	267.13	1,068.51
MPP	000439521	COUPLING	FUEL PUMP, SHAFT	7.00	EA	23.70	165.91
MPP	000439547	ROTOR ASM	FUEL PUMP, INCL ROTOR, SHAFT & KEY	2.00	EA	99.68	199.35
MPP	000439562	GASKET	COVER	2.00	EA	9.59	19.18
MPP	000439588	GASKET	SEPARATOR MOUNTING	12.00	EA	2.09	25.08
MPP	000439604	GASKET	EJECTOR, END - CHAMBER	2.00	EA	2.94	5.88
MPP	000439620	GASKET	EJECTOR MOUNTING	4.00	EA	0.50	2.00
MPP	000439646	TUBE ASM	EDUCTOR - OUTER	2.00	EA	24.11	48.22
MPP	000439661	TUBE ASM	EDUCTOR - INNER	2.00	EA	54.35	108.70
MPP	000439687	GASKET	CONNECTION MOUNTING	17.00	EA	1.17	19.92
MPP	000439703	BOLT	CONNECTION MTG, 3/8-24 X 1-1/2	95.00	EA	0.81	76.60
MPP	000439729	WASHER	LOCK, 1 INCH	8.00	EA	0.04	0.32
MPP	000439745	BOLT	HEX HD, 3/8-24 X 2-1/4	50.00	EA	0.37	18.50
MPP	000439760	NOZZLE	EJECTOR END	1.00	EA	12.01	12.01
MPP	000439786	WASHER	FLAT, 3/8"	201.00	EA	0.05	10.05
MPP	000439802	NUT	LOCK, 3/8-24	212.00	EA	0.33	69.22
MPP	000439828	BOLT	HEX HD, 1/2-20 X 1-5/8	5.00	EA	0.47	2.35
MPP	000439844	BOLT	HEX HD, 1/2-20 X 1-3/4	5.00	EA	0.40	2.00
MPP	000439869	STRAP	SADDLE-WATER INLET TUBE	4.00	EA	4.72	18.88
MPP	000439885	SEAL RING	WATER, COOLING SYS	13.00	EA	3.03	39.35
MPP	000439901	NUT	LOCK, 3/8-24 HEX	3.00	EA	0.05	0.15
MPP	000439927	GASKET	FLANGE MOUNTING	9.00	EA	3.83	34.45
MPP	000439943	GASKET	HEADER TO COUPLING MOUNTING	5.00	EA	3.14	15.70
MPP	000439968	GASKET	ADAPTER MOUNTING	6.00	EA	4.85	29.10
MPP	000439984	GASKET	WATER INLET	22.00	EA	0.00	0.00
MPP	000440008	BEARING	BALL - IMPELLER END	2.00	EA	47.94	95.88
MPP	000440024	BEARING	BALL - GEAR END	2.00	EA	72.99	145.97
MPP	000440040	PUMP KIT	WATER, BEARING NOT INCL.	1.00	EA	48.92	48.92
MPP	000440065	SPRING	SEAL RETAINER	8.00	EA	2.56	20.48
MPP	000440081	PIN	ROLL 1/8 X 1-3/8	15.00	EA	0.02	0.30
MPP	000440107	SPACER	BEARING (PIPE)	2.00	EA	10.87	21.74
MPP	000440123	PUMP ASM	WATER, RIGHT BANK	2.00	EA	760.00	1,520.00
MPP	000440149	GASKET	HOUSING TO SUPPORT	8.00	EA	6.35	50.84
MPP	000440164	RING	SNAP	15.00	EA	1.85	27.75
MPP	000440180	RING	SNAP, (CAPITAL)	8.00	EA	1.50	12.00
MPP	000440206	IMPELLER	PUMP	2.00	EA	156.43	312.85
MPP	000440222	RING	RETAINING	3.00	EA	4.14	12.42
MPP	000440248	SHAFT	WATER PUMP	0.00	EA	110.69	0.00
MPP	000440263	NUT	LOCK, BRASS, 5/8"-18 HEX	3.00	EA	1.63	4.89
MPP	000440289	SUPPORT ASM	HOUSING	1.00	EA	336.46	336.46
MPP	000440305	NUT	LOCK, 1-14 HEX	9.00	EA	0.93	8.37
MPP	000440321	SLINGER	WATER	18.00	EA	0.32	5.76

NOTE: SOH - Stock on Hand

Source: DARS 3342 Report (as of 5/31/07)

Maui Electric Company, Limited

MATERIALS PHYSICAL INVENTORY
MAALAEA POWER PLANT

WH	STOCK CODE	Item	Description	SOH	Unit	Price/ Unit	Total Cost/ Item
MPP	000440347	KEY	WOODRUFF, SHAFT TO IMPELLER	49.00	EA	0.20	9.80
MPP	000440362	NUT	LOCK, 1/2"-20 HEX	22.00	EA	0.15	3.30
MPP	000440388	KEY	WOODRUFF, SHAFT TO GEAR	23.00	EA	0.43	9.89
MPP	000440404	GEAR	DRIVE, PUMP, 37 TOOTH	2.00	EA	178.23	356.46
MPP	000440420	REPAIR KIT	PUMP, INCL. BEARINGS	9.00	EA	146.52	1,318.68
MPP	000440446	WASHER	SPECIAL, 1 INCH	2.00	EA	9.55	19.10
MPP	000440461	SPRING	HOUSING	3.00	EA	2.57	7.71
MPP	000440487	BOLT	MANIFOLD MTG. 7/16 - 20 X 1 HEX	20.00	EA	0.42	8.40
MPP	000440503	BOLT	MANIFOLD MTG. 7/16-20 X 2-1/4 HEX	50.00	EA	0.49	24.50
MPP	000440529	NUT	LOCK, 7/16-20 HEX	48.00	EA	0.49	23.52
MPP	000440545	GASKET	MANIFOLD MTG	10.00	EA	0.48	4.80
MPP	000440560	LINER ASM	FUEL OIL	25.00	EA	43.79	1,094.63
MPP	000440586	NUT	LOCK, 7/16 - 20 HEX	11.00	EA	0.07	0.77
MPP	000440602	WASHER	PLAIN, 7/16	173.00	EA	0.30	51.90
MPP	000440628	GASKET,	INLET LINE TO FILTER	49.00	EA	0.34	16.66
MPP	000440644	BOWL	GLASS-OIL SIGHT	2.00	EA	1.94	3.88
MPP	000440669	BOLT	ADAPTER TO BODY, 3/4 - 10 X 2"	4.00	EA	0.87	3.48
MPP	000440685	SEAL	ADAPTER TO BODY - INNER	21.00	EA	0.55	11.55
MPP	000440701	SEAL	ADAPTER TO BODY - OUTER	125.00	EA	0.12	15.00
MPP	000440727	FILTER	FUEL - SPIN ON	56.00	EA	6.74	377.25
MPP	000440743	INJECTOR ASM	FUEL, OIL, LO SMOKE	0.00	EA	106.77	0.00
MPP	000440768	KIT ASM	INJECTOR REPAIR	48.00	EA	41.28	1,981.44
MPP	000440784	TIP ASM	SPRAY	7.00	EA	28.53	199.71
MPP	000440800	INJECTOR ASM	FUEL OIL, LO-SMOKE	10.00	EA	124.82	1,248.18
MPP	000440826	GASKET	CYLINDER HEAD COVER	8.00	EA	19.08	152.64
MPP	000440842	WASHER	HARDENED 1/8"	89.00	EA	0.03	2.67
MPP	000440867	SEAL	HOUSING TO ASSY DR HOUSING	7.00	EA	0.12	0.84
MPP	000440883	RETAINER	SLEEVE	2.00	EA	0.71	1.42
MPP	000440909	SLEEVE	OIL SEAL	5.00	EA	6.53	32.65
MPP	000440925	SEAL	HOUSING TO ACCESS DR	5.00	EA	0.45	2.25
MPP	000440941	KIT ASM	REPAIR	1.00	EA	48.24	48.24
MPP	000440966	DETECTOR ASM	CRANKCASE PRESSURE	0.00	EA	500.49	0.00
MPP	000440982	SEAL	OIL SLINGER (BLOWER DRIVE)	52.00	EA	0.33	17.16
MPP	000441006	GASKET	COVER TO HOUSING	59.00	EA	0.66	38.94
MPP	000441022	RING	SNAP	0.00	EA	0.15	0.00
MPP	000441048	BEARING	BALL - DRIVE SHAFT	2.00	EA	3.42	6.84
MPP	000441063	GASKET	RETAINER TO BASE	6.00	EA	0.20	1.20
MPP	000441089	GASKET	SOLENOID VALVE COVER MOUNTING	2.00	EA	2.15	4.30
MPP	000441105	RETAINER	OIL SEAL	3.00	EA	3.15	9.45
MPP	000441121	SEAL	OIL	0.00	EA	2.10	0.00
MPP	000441147	POINTER	TERMINAL SHAFT SCALE	1.00	EA	42.12	42.12
MPP	000441162	CONTROL BOX	EGA	1.00	EA	0.00	0.00
MPP	000441188	GOVERNOR ASM	ENGINE - ACTUATOR	1.00	EA	7,601.20	7,601.20
MPP	000441204	POTENTIOMETER ASM	MOTOR OPERATED	1.00	EA	1,627.47	1,627.47
MPP	000441220	MOTOR	HURST	2.00	EA	57.91	115.82
MPP	000441246	GASKET	EXPANSION JOINT TO TURBO	1.00	EA	5.10	5.10
MPP	000441261	NUT	LOCK, 1/2-20 SS HEX	70.00	EA	0.63	44.10
MPP	000441287	GASKET	ADAPTER TO EXP JT	3.00	EA	34.74	104.21
MPP	000441303	BOLT	EXPANSION JOINT, 1/2-20X2 HEX HEAD	142.00	EA	0.63	89.46
MPP	000441329	GASKET	EXH CHAMBER TO ADAPTER	3.00	EA	43.34	130.01
MPP	000441345	GASKET	EXPANSION JOINT TO CHAMBER	3.00	EA	35.91	107.73
MPP	000441360	GASKET	WATER DISCHARGE ELBOW TO CRANKCASE	1.00	EA	6.86	6.86
MPP	000441386	GASKET	EXHAUST CHAMBER TO CRANKCASE	18.00	EA	8.91	160.38
MPP	000441402	JOINT ASM	EXPANSION, ADAPTER TO TURBO	4.00	EA	1,026.72	4,106.87
MPP	000441428	JOINT ASM	EXPANSION, BETWEEN CHAMBERS	1.00	EA	408.66	408.66
MPP	000441444	GASKET	AFTERCOOLER MOUNTING	2.00	EA	12.89	25.77
MPP	000441469	GASKET	"Y" FLANGE MOUNTING	2.00	EA	2.79	5.58
MPP	000441485	JOINT	EXPANSION, 33-7/8"" X 13-3/4" X 1" THK	1.00	EA	619.84	619.84
MPP	000441501	GASKET	AIR DUCT TO AIR BOX	8.00	EA	14.38	115.04
MPP	000441527	AIR DUCT	HEAT EXCHANGER	1.00	EA	4,000.34	4,000.34
MPP	000441543	TURBOCHARGER ASM	18:1 GEAR RATIO	0.00	EA	22,735.94	0.00
MPP	000441568	BOLT	HEX HEAD 3/8-24 X 1" AFT COOLER MTG	100.00	EA	0.00	0.00
MPP	000441584	BOLT	HEX HEAD, 3/8-24 X 1-3/4"	100.00	EA	0.00	0.00
MPP	000441600	BOLT	HEX HEAD 1/2-20 X 1"	45.00	EA	0.00	0.00
MPP	000441626	BOLT	HX HD 1/2-20 X 1-3/4" FLANGE EL MTG	0.00	EA	0.00	0.00
MPP	000441642	GASKET	OUTER HEADER TO CORE	6.00	EA	12.26	73.55

NOTE: SOH - Stock on Hand

Source: DARS 3342 Report (as of 5/31/07)

Maui Electric Company, Limited

MATERIALS PHYSICAL INVENTORY
MAALAEA POWER PLANT

WH	STOCK CODE	Item	Description	SOH	Unit	Price/ Unit	Total Cost/ Item
MPP	000441667	GASKET	INNER COVER TO CORE	14.00	EA	9.44	132.16
MPP	000441683	CORE ASM	AFT COOLER (YOUNG)	0.00	EA	2,138.00	0.00
MPP	000441709	DUCT	AIR, 10-3/32ID X 6-11/16 IN.	4.00	EA	82.84	331.34
MPP	000441725	CLAMP	AIR DUCT, 10.12 IN. - 10.78 IN.	2.00	EA	21.60	43.20
MPP	000441741	GASKET KIT	CYLINDER HEAD	6.00	EA	34.42	206.50
MPP	000441766	GASKET KIT	AFTERCOOLER	5.00	EA	13.24	66.22
MPP	000441782	GASKET KIT	LUBE OIL SEPARATOR	3.00	EA	32.27	96.81
MPP	000441808	GASKET KIT	LUBE OIL SUCTION STRAINER	6.00	EA	98.16	588.98
MPP	000441824	GASKET KIT	OVERSPEED TRIP HOUSING	6.00	EA	27.66	165.96
MPP	000441840	GASKET KIT	GOV DRIVE	2.00	EA	10.50	21.01
MPP	000441865	GASKET	FRAME TO CRANKCASE, INSIDE	7.00	EA	12.16	85.12
MPP	000441881	GASKET	FRAME TO CRANKCASE, OUTSIDE	5.00	EA	33.77	168.85
MPP	000441907	GASKET KIT	LUBE OIL PRESSURE PUMP	1.00	EA	31.63	31.63
MPP	000441923	GASKET	WATER DRAIN PIPE-ELBOW	5.00	EA	0.10	0.50
MPP	000441949	ORING	AIR BOX DRAIN/CRANK	4.00	EA	0.21	0.84
MPP	000441964	GASKET KIT	AFTERCOOLER CHANGEOUT	5.00	EA	9.18	45.90
MPP	000441980	SEAL	CYLINDER HEAD COVER	14.00	EA	61.79	865.01
MPP	000442004	GASKET KIT	CYLINDER HEAD COVER & SUPPORT FRAME	7.00	EA	147.12	1,029.84
MPP	000442020	GASKET KIT	ACCESSORY DRIVE HOUSING	4.00	EA	48.31	193.23
MPP	000442046	GASKET KIT	WATER PUMP	2.00	EA	19.23	38.46
MPP	000442061	GASKET	AFTERCOOLER MTG TO AIR DUCT	7.00	EA	9.44	66.08
MPP	000442087	GASKET KIT	TURBOCHARGER CHANGEOUT	4.00	EA	109.35	437.40
MPP	000442103	GASKET	BOWL TO FILTER BODY	4.00	EA	0.33	1.30
MPP	000442129	GASKET	PIPE TO CRANKCASE - WATER	1.00	EA	0.19	0.19
MPP	000442145	SEAL	RING - SCAVENGING OIL STRAINER	0.00	EA	0.46	0.00
MPP	000442160	GASKET KIT	LUBE OIL SUCTION STRAINER	3.00	EA	21.27	63.82
MPP	000442186	GASKET KIT	POWER ASSY INSTALLATION	6.00	EA	12.66	75.98
MPP	000442202	GASKET KIT	CYLINDER LINER	68.00	EA	9.60	652.79
MPP	000442228	GASKET KIT	CAMSHAFT DRIVE	3.00	EA	9.32	27.96
MPP	000442244	GASKET	ACCESSORY DRIVE HOUSING TO CRANKCASE	3.00	EA	34.00	102.00
MPP	000442269	GASKET KIT	SCAVENGING OIL PUMP	3.00	EA	17.00	51.01
MPP	000442285	SEAL	PISTON COOLING & MAIN BRG STRNR	10.00	EA	1.36	13.60
MPP	000442301	GASKET	GOVERNOR DRIVE OIL LINE	18.00	EA	0.65	11.70
MPP	000442327	GASKET	PUMP TO ACCESS. DR COVER	7.00	EA	1.89	13.23
MPP	000442343	SEAL	PISTON COOLING PRESSURE	2.00	EA	0.26	0.52
MPP	000442368	GASKET	PISTON COOLING INLET/OUTLET ELBOW	3.00	EA	0.26	0.78
MPP	000442384	SEAL	ELBOW TO ACCESS. DR. HSG	4.00	EA	2.59	10.36
MPP	000442400	GASKET	GOVERNOR TO GOVERNOR DRIVE	14.00	EA	2.47	34.59
MPP	000442426	GASKET	GOVERNOR DRIVE HOUSING COVER PLATE	10.00	EA	1.03	10.30
MPP	000442442	GASKET	GOVERNOR DRIVE MOUNTING	23.00	EA	0.43	9.89
MPP	000442467	ELEMENT	FILTER - PAPER, AIR	32.00	EA	94.54	3,025.20
MPP	000442483	GASKET KIT	HEAD, LUBE OIL SCAVENGING	5.00	EA	8.55	42.74
MPP	000442509	GASKET	CENTER HOUSING MOUNTING	19.00	EA	0.44	8.36
MPP	000442525	SEAL	MECHANICAL	3.00	EA	37.92	113.76
MPP	000442541	GASKET	PUMP BRACKET TO PUMP HOUSING	0.00	EA	0.28	0.00
MPP	000442566	GASKET	L.O. COOLER WATER INLET PIPE	3.00	EA	9.04	27.11
MPP	000442582	GAUGE	FUEL TANK W/ FLOAT	2.00	EA	28.06	56.12
MPP	000442608	SEAL	RUBBER	0.00	EA	2.66	0.00
MPP	000442624	REPAIR KIT	VALVE, 1" BALL VALVE	2.00	EA	1.30	2.60
MPP	000442640	ADAPTOR	ENGINE WATER OUTLET	1.00	EA	0.00	0.00
MPP	000442665	REPAIR KIT	VALVE, 1-1/4" BALL VALVE	1.00	EA	2.45	2.45
MPP	000442670	VALVE, CHECK, SIZE: 1" F.P.T.	FOR WATER, LUBE & FUEL OIL EQUIPMENT	1.00	EA	189.30	189.30
MPP	000442681	GASKET	SWITCH & BLIND FLANGE /MNFLD	10.00	EA	0.93	9.34
MPP	000442707	SWITCH	HOT ENGINE TEMP, ETS	1.00	EA	91.74	91.74
MPP	000442723	GASKET	INLET & OUT MAN. PIPE	34.00	EA	0.29	9.86
MPP	000442749	COUPLING ASSY	FLEXIBLE	2.00	EA	70.42	140.84
MPP	000442764	COUPLING	FLEXIBLE	3.00	EA	9.70	29.10
MPP	000442780	COUPLING	FLEXIBLE	2.00	EA	22.93	45.86
MPP	000442806	COUPLING	FLEXIBLE, INCOMPLETE	2.00	EA	0.00	0.00
MPP	000442822	ELEMENT	IMMERSION HEATER	1.00	EA	714.03	714.03
MPP	000442848	ADAPTER	ENGINE WATER OUTLET	1.00	EA	237.11	237.11
MPP	000442863	SEAL	RUBBER	16.00	EA	3.32	53.13
MPP	000442889	REPAIR KIT	3/4" BALL VALVE	2.00	EA	1.47	2.94
MPP	000442905	CAP ASSY	WATER FILLER - SPRING LOADER	6.00	EA	35.50	212.97
MPP	000442921	CONTROL BOX	SHUTTER	0.00	EA	1,793.05	0.00

NOTE: SOH - Stock on Hand

Source: DARS 3342 Report (as of 5/31/07)

Maui Electric Company, Limited

MATERIALS PHYSICAL INVENTORY
MAALAEA POWER PLANT

WH	STOCK CODE	Item	Description	SOH	Unit	Price/ Unit	Total Cost/ Item
MPP	000442947	COUPLING	FLEXIBLE	2.00	EA	0.00	0.00
MPP	000442962	COUPLING ASSY	FLEXIBLE, WATER INLET	3.00	EA	0.00	0.00
MPP	000442988	COIL ASSY	ENG. WATER COOLING	0.00	EA	38,740.75	0.00
MPP	000443002	SWITCH ASSY	FUEL TRANSFER PUMP	1.00	EA	4,273.45	4,273.45
MPP	000443028	GASKET	BODY MOUNTING	24.00	EA	1.48	35.52
MPP	000443044	GASKET	COVER MOUNTING	27.00	EA	4.55	122.85
MPP	000443069	LATCH ASSY	CLIP COVER	2.00	EA	2.36	4.72
MPP	000443085	LATCH ASSY	COVER HINGE	40.00	EA	2.72	108.80
MPP	000443101	LATCH ASSY	COVER CLIP, RT BANK ONLY	2.00	EA	5.31	10.61
MPP	000443124	O-RING	FUEL OIL STRAINER	9.00	EA	10.95	98.52
MPP	000443127	ELEMENT	FILTER, FUEL TRANSFER	4.00	EA	27.73	110.92
MPP	000443143	STRAINER ASSY	LINE, 1 F.P.T. INLET & OUTLET	2.00	EA	26.55	53.10
MPP	000443168	SCREEN	STRAINER, 2-15/16 IN. LONG	0.00	EA	8.72	0.00
MPP	000443184	ORING	COVER TO BODY (FUEL & SOAK BACK)	3.00	EA	2.70	8.10
MPP	000443200	GASKET	COVER TO SHELL (FUEL & SOAK BACK)	10.00	EA	2.53	25.26
MPP	000443226	ORING	SHELL TO COVER (FUEL SUCTION)	15.00	EA	1.45	21.77
MPP	000443242	VALVE ASSY	FUEL CUTOFF	1.00	EA	40.63	40.63
MPP	000443267	VALVE	FUEL CUT-OFF	1.00	EA	105.99	105.99
MPP	000443283	ELEMENT	STRAINER - WIRE MESH, FUEL	3.00	EA	7.01	21.03
MPP	000443309	REPAIR KIT	SOLENOID	1.00	EA	212.66	212.66
MPP	000443325	ELEMENT	FILTER 6-1/2 IN, MAIN L.O.	44.00	EA	21.62	951.35
MPP	000443341	GASKET	VALVE PORT COVER, L.O. FILTER	7.00	EA	26.66	186.62
MPP	000443366	GASKET	COVER, L.O. FILTER	28.00	EA	2.34	65.52
MPP	000443382	VALVE ASSY	BY-PASS RELIEF, 40 P.S.I.	1.00	EA	73.24	73.24
MPP	000443408	GASKET	HEADER TO CORE	0.00	EA	24.10	0.00
MPP	000443424	GASKET	LUBE OIL FLANGE OUTLET ELBOW/TANK	8.00	EA	3.62	28.94
MPP	000443440	ORING	OIL SEAL	6.00	EA	24.93	149.60
MPP	000443465	GASKET	OIL COOLER	2.00	EA	8.44	16.87
MPP	000443481	CORE	HARRISON	0.00	EA	4,989.74	0.00
MPP	000443507	GASKET	WATER OUTLET & LO INLET	3.00	EA	3.42	10.27
MPP	000443523	GASKET	BOTTOM HEADER TO TANK	5.00	EA	70.05	350.26
MPP	000443549	GASKET	OIL COOLER	6.00	EA	0.50	3.00
MPP	000443564	GASKET	TOP HEADER TO TANK AT VENT	18.00	EA	5.50	99.04
MPP	000443580	GASKET	BLIND FLANGE TO HEADER	4.00	EA	26.00	104.00
MPP	000443606	CORES	RADIATOR COMPLETE	0.00	EA	0.00	0.00
MPP	000443622	BLOCK ASSY	PILLOW	3.00	EA	562.37	1,687.11
MPP	000443648	BEARING	LINK-BELT	0.00	EA	394.33	0.00
MPP	000443663	BELT SET	"V", SET OF 8	2.00	ST	570.71	1,141.43
MPP	000443689	OPERATOR	MOTOR, 120V, 50/60 HZ	2.00	EA	2,121.09	4,242.18
MPP	000443705	BUSHING	SHUTTER BLADE SHAFT	98.00	EA	1.71	167.72
MPP	000443721	BEARING	PILLOW BLOCK - 3" SHAFT	3.00	EA	509.34	1,528.03
MPP	000443747	PIN	ACTUATOR TO BLADE	57.00	EA	6.96	396.72
MPP	000443762	PIN	RETAINER	49.00	EA	0.40	19.60
MPP	000443788	PIN	CLEVIS	60.00	EA	7.11	426.42
MPP	000443804	COVER	BEARING, BLOWER END	1.00	EA	140.14	140.14
MPP	000443820	COVER	BEARing ENGINE END	1.00	EA	112.69	112.69
MPP	000443846	DUCT	AIR-FLEXIBLE	2.00	EA	0.00	0.00
MPP	000443861	SEAL	BEARING	2.00	EA	128.83	257.66
MPP	000443887	COUPLING ASSY	FLEXIBLE, DRIVE ASSY	2.00	EA	62.15	124.30
MPP	000443903	HOUSING	BEARING, BLOWER END	1.00	EA	109.12	109.12
MPP	000443929	HOUSING	BEARING, ENGINE END	1.00	EA	81.96	81.96
MPP	000443945	GASKET	COVER TO HOUSING	20.00	EA	1.01	20.20
MPP	000443960	BEARING	BALL	2.00	EA	134.79	269.58
MPP	000443986	SPACER	BEARING	2.00	EA	9.08	18.16
MPP	000444000	RIVET	LATCH TO STRAP, 3/32 X 1/4 EXH CHAMBER	19.00	EA	0.05	0.95
MPP	000444026	CLAMP	HOSE	4.00	EA	13.00	52.00
MPP	000444042	STRAP ASSY	OUTER	5.00	EA	2.25	11.24
MPP	000444067	BAND ASSY	INNER	5.00	EA	411.79	2,058.96
MPP	000444083	COUPLING ASSY	FLEXIBLE	8.00	EA	74.39	595.09
MPP	000444109	SEAL ASSY	4", COMP. OF 8474741	8.00	EA	9.93	79.45
MPP	000444125	BOLT	FLEXIBLE, COMP. OF 8474741	11.00	EA	2.11	23.21
MPP	000444141	SEAL	RUBBER, 3"	4.00	EA	4.76	19.04
MPP	000444166	NUT	NUT, COMP. OF 8452623	11.00	EA	0.69	7.59
MPP	000444182	SEAL	RUBBER, 1" COMP. OF 8470340 (FLEXIBLE	0.00	EA	2.86	0.00
MPP	000444208	HOSE	RUBBER, 2-1/2" ID	1.00	EA	16.10	16.10
MPP	000444224	SEAL	RUBBER, 6" COMP. OF 8393725	3.00	EA	23.54	70.61
MPP	000444240	TUBE	GAUGE GLASS 3/4OD X 23-7/8 IN	3.00	EA	18.36	55.07

NOTE: SOH - Stock on Hand

Source: DARS 3342 Report (as of 5/31/07)

Maui Electric Company, Limited

MATERIALS PHYSICAL INVENTORY
MAALAEA POWER PLANT

WH	STOCK CODE	Item	Description	SOH	Unit	Price/ Unit	Total Cost/ Item
MPP	000444265	WASHER	RUBBER	4.00	EA	0.23	0.92
MPP	000444281	COCK	DRAIN, 1/8 M.P.T.	10.00	EA	0.71	7.10
MPP	000444307	WASHER	FIBER	8.00	EA	0.12	0.96
MPP	000444323	WEATHER-STRIP	DOOR SEAL 22-1/2 X 72 IN	4.00	EA	113.37	453.48
MPP	000444349	WEATHER-STRIP	DOOR SEAL 39-1/4 X 72 IN	2.00	EA	122.24	244.48
MPP	000444364	WEATHER-STRIP	DOOR SEAL 39-1/4 X 71-1/2	1.00	EA	87.85	87.85
MPP	000444380	LOCK ASSY	MAINTENANCE DOOR	1.00	EA	117.42	117.42
MPP	000444406	LOCK ASSY	MAINTENANCE DOOR	2.00	EA	173.13	346.26
MPP	000444422	STARTER, MAGNETIC	CUTLER -NEMA SIZE 0 SERIES A-1	2.00	EA	355.07	710.15
MPP	000444448	RELAY	FUEL TRANSFER	1.00	EA	46.05	46.05
MPP	000444463	FUSE	LIMITING	3.00	EA	78.25	234.75
MPP	000444489	TRANSFORMER	POTENTIAL	2.00	EA	1,004.86	2,009.72
MPP	000444505	BOARD ASSY	POWER SUPPLY	2.00	EA	183.58	367.16
MPP	000444521	FUSE	FERRULE TYPE, 1 AMP 250 VOLTS	3.00	EA	0.06	0.18
MPP	000444530	RELAY, (EN) ENGINE ANNUNCIATOR.	FOR ELECTRICAL CONTROL CABINET	1.00	EA	339.15	339.15
MPP	000444547	FUSE	POTENTIAL TRANSFORMER	2.00	EA	0.00	0.00
MPP	000444562	FUSE	FERRULE TYPE, 6 AMP 250 VOLT	5.00	EA	0.27	1.35
MPP	000444588	FUSE	KNIFE TYPE, 100A 250V	6.00	EA	9.33	55.97
MPP	000444604	FUSE	KNIFE TYPE, 350A 250V	5.00	EA	30.78	153.90
MPP	000444620	FUSE	KNIFE TYPE DUAL ELEMENT 100A 250V	9.00	EA	9.22	82.98
MPP	000444646	BOARD ASSY	AMPLIFIE	1.00	EA	358.07	358.07
MPP	000444661	BOARD ASSY	PHASE	1.00	EA	374.37	374.37
MPP	000444687	FUSE	KNIFE TYPE, 400A 250V	0.00	EA	14.46	0.00
MPP	000444703	FUSE	KNIFE TYPE, 70A 250V	3.00	EA	3.31	9.93
MPP	000444729	FUSE	FERRULE TYPE, 30A 250V	3.00	EA	0.30	0.90
MPP	000444745	BOARD ASSY	FREQUENCY	1.00	EA	174.17	174.17
MPP	000444760	BOARD ASSY	AMPLIFIER	1.00	EA	297.30	297.30
MPP	000444786	BOARD ASSY	TOROID	1.00	EA	0.00	0.00
MPP	000444802	REACTOR	CURRENT DETECTOR	1.00	EA	0.00	0.00
MPP	000444828	REACTOR	VOLTAGE DETECTOR	1.00	EA	0.00	0.00
MPP	000444844	SWITCH	STEPPING - PINION FAILURE	2.00	EA	414.83	829.66
MPP	000444869	METER	HOUR, TYPE BH351, 60 CYCLE	1.00	EA	216.54	216.54
MPP	000444885	RELAY	OVERLOAD	2.00	EA	75.37	150.74
MPP	000444901	COIL	HEATER	2.00	EA	27.04	54.08
MPP	000444927	RELAY	TIME DELAY	2.00	EA	167.86	335.72
MPP	000444943	RECTIFIER	SELENIUM-SUPPRESSION	4.00	EA	23.21	92.84
MPP	000444968	CAPACITOR	TANTALUM	1.00	EA	16.04	16.04
MPP	000444984	SWITCH	SAFETY INTERLOCK	1.00	EA	78.75	78.75
MPP	000445007	BATTERY	DRY TYPE 4-MS-420	0.00	EA	1,533.99	0.00
MPP	000445023	BATTERY	EXIDE, WET	0.00	EA	468.71	0.00
MPP	000445049	CARD ASSY	PRINTED CIRCUIT - PCB1	2.00	EA	180.56	361.12
MPP	000445064	PANEL ASSY	SPEED SENSING BOARD	1.00	EA	13,287.71	13,287.71
MPP	000445080	PANEL ASSY	PRINTED CIRCUIT	0.00	EA	3,590.36	0.00
MPP	000445106	CARD ASSY	PRINTED CIRCUIT - PCB2	1.00	EA	301.44	301.44
MPP	000445122	DIODE	SILICON	1.00	EA	38.03	38.03
MPP	000445148	RECTIFIER	SILICON	1.00	EA	436.11	436.11
MPP	000445163	BRUSH	CARBON, 2 X 1-1/2 X 1/2	30.00	EA	6.94	208.22
MPP	000445189	GASKET	BEARING COVER & BEARING CAP	5.00	EA	16.85	84.24
MPP	000445205	CLIP	BRUSH HOLDER - SPRING LOADED	2.00	EA	3.13	6.26
MPP	000445221	BRUSH	CARBON, 2 X 1-1/4 X 1/2	34.00	EA	8.09	275.16
MPP	000445247	HOLDER ASSY	BRUSH	10.00	EA	237.93	2,379.31
MPP	000445262	BRUSH	BREAKER MOTOR	4.00	EA	3.70	14.80
MPP	000445288	COUPLING ASSY	JAW, PUMP TO MOTOR	0.00	ST	32.32	0.00
MPP	000445304	ORING	HEAD TO CASING SEAL	14.00	EA	6.09	85.26
MPP	000445320	BUSHING	IDLER, L.O. CIRCULATING PUMP	7.00	EA	16.55	115.85
MPP	000445346	BEARING	BALL, DOUBLE ROW FUEL TRANSFER	1.00	EA	17.52	17.52
MPP	000445361	BEARING	BALL, SINGLE ROW FUEL TRANSFER	3.00	EA	12.77	38.31
MPP	000445387	SEAL	OIL, FUEL TRANSFER	1.00	EA	74.12	74.12
MPP	000445403	PUMP	L.O., CIRCULATING, 1 F.P.T.	1.00	EA	893.84	893.84
MPP	000445429	COUPLING ASSY	PUMP TO MOTOR, 1/2IN X 7/8 IN BORE	2.00	EA	57.95	115.89
MPP	000445445	SPIDER	COUPLING L.O. CIRCULATING PUMP	24.00	EA	44.19	1,060.49
MPP	000445460	MOTOR ASSY	PUMP, 1 HP 145T, 1140 RPM	1.00	EA	276.97	276.97
MPP	000445486	SWITCH	IMMERSION HEATER, (IHTS)	2.00	EA	427.44	854.88
MPP	000445502	SWITCH	LUBE OIL TEMP, (LOTS)	1.00	EA	201.49	201.49
MPP	000445528	SWITCH	MECHANISM, TYPE S-1	1.00	EA	108.94	108.94
MPP	000445544	SWITCH	MERCURY BULB	6.00	EA	58.76	352.56
MPP	000445569	SWITCH	(AIR PRESS.)	2.00	EA	259.72	519.44

NOTE: SOH - Stock on Hand

Source: DARS 3342 Report (as of 5/31/07)

Maui Electric Company, Limited

MATERIALS PHYSICAL INVENTORY
MAALAEA POWER PLANT

WH	STOCK CODE	Item	Description	SOH	Unit	Price/ Unit	Total Cost/ Item
MPP	000445585	SWITCH	MAIN BEARING (LOW WATER PRESSURE)	0.00	EA	117.74	0.00
MPP	000445601	SWITCH	MAIN BEARING, (MB2)	1.00	EA	117.74	117.74
MPP	000445627	POTENTIOMETER	CONTROL SWITCH C5516MU	3.00	EA	55.39	166.17
MPP	000445643	RELAY	AGASTAT	4.00	EA	305.43	1,221.72
MPP	000445668	RELAY	RELAY, GENERAL PURPOSE	3.00	EA	108.00	324.00
MPP	000445684	RELAY	RELAY, AUTOMATIC, (AR)	1.00	EA	120.84	120.84
MPP	000445700	RELAY	RELAY, UNIT START, NLO,USA,SYP,MR,RSU	2.00	EA	0.00	0.00
MPP	000445726	CARTRIDGE	CARTRIDGE, TURBO	39.00	EA	14.18	552.98
MPP	000445742	CARTRIDGE	(FUEL TRANSFER (SOCK)	14.00	EA	27.50	384.95
MPP	000445767	PLATE	SWITCH GEAR	5.00	EA	0.00	0.00
MPP	000445783	YOKE END	SWITCH GEAR	1.00	EA	9.32	9.32
MPP	000445809	SHIELD	SWITCH GEAR	1.00	EA	0.00	0.00
MPP	000445825	BRACKET	SWITCH GEAR	4.00	EA	0.00	0.00
MPP	000445841	YOKE	SWITCH GEAR	2.00	EA	0.00	0.00
MPP	000445866	ROD	PUSH, SWITCH GEAR	2.00	EA	158.92	317.84
MPP	000445882	BARRIER	SWITCH GEAR	4.00	EA	33.01	132.04
MPP	000445908	INSULATION	SWITCH GEAR	2.00	EA	0.99	1.98
MPP	000445924	FAN	EXHAUST, DAYTON	1.00	EA	177.32	177.32
MPP	000445940	CONTACT	BREAKER (STATIONARY)	2.00	EA	136.70	273.40
MPP	000445965	CONTACT ASSY	BREAKER (ARCING CONTACT LH74)	4.00	EA	459.88	1,839.52
MPP	000445981	CONTACT ASSY	BREAKER	0.00	EA	163.74	0.00
MPP	000446005	STRIP	SWITCH GEAR	13.00	EA	0.40	5.20
MPP	000446021	BEARING	NEEDLE	2.00	EA	7.20	14.40
MPP	000446047	BEARING	NEEDLE	4.00	EA	6.14	24.56
MPP	000446062	BEARING	ROLLER	3.00	EA	12.91	38.73
MPP	000446088	BEARING	ROLLER	4.00	EA	0.00	0.00
MPP	000446104	WHEEL	RATCHET	1.00	EA	0.00	0.00
MPP	000446120	PAWL ASSY	SWITCH GEAR	2.00	EA	0.00	0.00
MPP	000446146	CAM ASSY	SWITCH GEAR	1.00	EA	0.00	0.00
MPP	000446161	TUBE	SWITCH GEAR	8.00	EA	38.44	307.52
MPP	000446187	DETECTOR	METAL PARTICLE	1.00	EA	760.50	760.50
MPP	000446203	GRID	METAL PARTICLE	1.00	EA	83.55	83.55
MPP	000446229	ORING	METAL PARTICLE (VITON)	2.00	EA	7.00	14.00
MPP	000446245	ORING	METAL PARTICLE (VITON)	4.00	EA	2.24	8.96
MPP	000446260	SERVICE KIT	METAL PARTICLE	1.00	EA	145.55	145.55
MPP	000446286	WIRE	LEAD	8.00	EA	25.85	206.80
MPP	000446302	RING	OIL SEAL	1.00	EA	649.74	649.74
MPP	000446328	CAPSCREW	5/16-18 X 1",	9.00	EA	2.35	21.15
MPP	000446344	PIN	ANCHOR	5.00	EA	56.89	284.45
MPP	000446369	INSERT	BEARING HUB	1.00	EA	1,519.69	1,519.69
MPP	000446385	CAPSCREW	1/2-13 X 1-3/4"	44.00	EA	1.92	84.48
MPP	000446401	RING	RETAINING	3.00	EA	78.15	234.45
MPP	000446427	INSERT	BEARING HUB	2.00	EA	2,416.63	4,833.26
MPP	000446443	CAPSCREW	3/8-16 X 1"	14.00	EA	2.34	32.76
MPP	000446468	TURBOCHARGER	COOPER	0.00	EA	39,828.00	0.00
MPP	000446484	SHIM	TURBOCHARGER	2.00	ST	119.57	239.14
MPP	000446500	RING	OIL SEAL	1.00	EA	743.60	743.60
MPP	000446526	CAPSCREW	#10-24 X 1/2	36.00	EA	0.27	9.57
MPP	000446542	RETAINER	BEARING	1.00	EA	1,079.32	1,079.32
MPP	000446567	RETAINER	BEARING	1.00	EA	1,001.29	1,001.29
MPP	000446583	GASKET	TURBOCHARGER	10.00	EA	4.40	44.00
MPP	000446609	COLLAR	THRUST	1.00	EA	968.36	968.36
MPP	000446625	CAPSCREW	3/8 X 3/4	30.00	EA	0.49	14.70
MPP	000446641	CAPSCREW	3/8-16 X 7/8	34.00	EA	0.63	21.57
MPP	000446666	WASHER	LOCK, 5/16	35.00	EA	0.63	22.09
MPP	000446682	WASHER	LOCK, 5/8"	40.00	EA	0.67	26.80
MPP	000446708	CAPSCREW	SPECIAL	9.00	EA	5.28	47.52
MPP	000446724	WEAR	DETECTOR	3.00	EA	66.29	198.87
MPP	000446740	CAP	TURBOCHARGER	1.00	EA	108.00	108.00
MPP	000446765	SLEEVE	BLOWER BEARING	1.00	EA	1,032.72	1,032.72
MPP	000446781	BEARING	THRUST	2.00	EA	1,240.83	2,481.67
MPP	000446807	CAPSCREW	5/16-18 X 1/2	25.00	EA	0.56	14.00
MPP	000446823	CAPSCREW	1/4-20 X 1/2	87.00	EA	1.14	99.18
MPP	000446849	PAD	BEARING	30.00	EA	127.30	3,818.88
MPP	000446864	DOWEL	3/16 X 1/4	22.00	EA	0.54	11.88
MPP	000446880	LOCKWIRE	TURBOCHARGER	45.00	FT	0.35	15.75
MPP	000446906	WASHER	GOES WITH #67	15.00	EA	2.06	30.90

NOTE: SOH - Stock on Hand

Source: DARS 3342 Report (as of 5/31/07)

Maui Electric Company, Limited

MATERIALS PHYSICAL INVENTORY
MAALAEA POWER PLANT

WH	STOCK CODE	Item	Description	SOH	Unit	Price/ Unit	Total Cost/ Item
MPP	000446922	SCREW	SOCKET HD, 1/2-13 X 1-1/2	23.00	EA	7.49	172.27
MPP	000446948	CAPSCREW	3/8"	12.00	EA	80.37	964.47
MPP	000446963	WASHER	TONGUE	40.00	EA	8.43	337.20
MPP	000446989	SHIELD	HEAT	1.00	EA	2,180.05	2,180.05
MPP	000447003	BONNET	TURBOCHARGER	1.00	EA	1,574.97	1,574.97
MPP	000447029	RING	RETAINING	2.00	EA	590.72	1,181.44
MPP	000447045	NAMEPLATE	ENGINE	0.00	EA	71.20	0.00
MPP	000447060	GASKET	FLAT SQUARE	3.00	EA	1.24	3.72
MPP	000447086	STUD	CONNECTING ROD	29.00	EA	222.80	6,461.28
MPP	000447102	LOCKWASHER	STAR	31.00	EA	0.68	20.95
MPP	000447128	WASHER	SPHERICAL	2.00	EA	29.83	59.66
MPP	000447144	WASHER	CONNECTING ROD, (3/4)	109.00	EA	27.59	3,007.58
MPP	000447169	LOCK	CONNECTING ROD	17.00	EA	29.06	494.05
MPP	000447185	PIN	PISTON	1.00	EA	2,080.00	2,080.00
MPP	000447201	PIN	CONNECTING ROD	1.00	EA	1,500.93	1,500.93
MPP	000447227	PIN	DOWEL	2.00	EA	9.79	19.58
MPP	000447243	BOLT	PISTON PIN	3.00	EA	134.67	404.01
MPP	000447268	NUT	SELF LOCK, 1/2-20	24.00	EA	0.81	19.47
MPP	000447284	NUT	SELF, (1-1/2-12)	32.00	EA	20.82	666.26
MPP	000447300	SHELL	BEARING	21.00	EA	896.50	18,826.58
MPP	000447326	STUD	TAP END, 1-7/8-10 X 19	2.00	EA	79.74	159.48
MPP	000447342	NUT	PLAIN HEX, 1-7/8-10	2.00	EA	22.70	45.40
MPP	000447367	SPRING	COVER	14.00	EA	27.32	382.48
MPP	000447383	COVER	PISTON PIN	6.00	EA	335.92	2,015.52
MPP	000447409	RING	OIL	7.00	EA	119.24	834.65
MPP	000447425	PISTON	(MAHLE)	0.00	EA	15,159.73	0.00
MPP	000447441	BUSHING	MAHLE PISTON	2.00	EA	1,557.67	3,115.34
MPP	000447466	RING SET	PISTON, CHROME LINER	30.00	EA	1,120.00	33,600.05
MPP	000447482	PISTON	POWER	4.00	EA	5,360.00	21,440.00
MPP	000447508	GASKET	CENTER FRAME	7.00	EA	506.81	3,547.64
MPP	000447524	NUT	CENTER FRAME, 2-1/4"-8"	3.00	EA	58.34	175.02
MPP	000447540	LOCKWASHER	CENTER FRAME, 1-1/8	29.00	EA	0.46	13.34
MPP	000447565	STUD	CENTER FRAME, 1-1/8 -12 X 8-3/4	8.00	EA	34.67	277.40
MPP	000447581	STUD	CENTER FRAME, 1-1/8 12 X 6-1/2	9.00	EA	31.98	287.84
MPP	000447607	STUD	CENTER FRAME, 1-1/8 - 12 X 5	3.00	EA	9.81	29.43
MPP	000447623	NUT	CENTER FRAME, 1-14	9.00	EA	1.78	16.01
MPP	000447649	BOLT	CENTER FRAME, 1-1/8 12 X 4-3/4	5.00	EA	17.43	87.15
MPP	000447664	NUT	CENTER FRAME, 1-1/8 - 12	12.00	EA	3.22	38.65
MPP	000447680	BOLT	CENTER FRAME, 1-1/8 - 12 X 3	6.00	EA	7.80	46.80
MPP	000447706	NUT	SPECIAL	5.00	EA	29.90	149.50
MPP	000447722	BOLT	FITTED	8.00	EA	51.68	413.42
MPP	000447748	BEARING	THRUST	5.00	EA	414.01	2,070.04
MPP	000447763	LOCKWASHER	SPLIT	48.00	EA	1.29	61.91
MPP	000447789	SHELL	BEARING	20.00	EA	1,479.82	29,596.41
MPP	000447805	SHELL	BEARING	16.00	EA	1,508.41	24,134.60
MPP	000447821	WASHER	FINISHED	18.00	EA	134.68	2,424.15
MPP	000447847	NUT	SELF LOCK	36.00	EA	53.91	1,940.71
MPP	000447862	STUD	TAP END	6.00	EA	404.00	2,424.00
MPP	000447888	GASKET	FLAT ROUND	117.00	EA	0.76	88.39
MPP	000447904	NUT	HEX, CYLINDER HEAD	3.00	EA	26.54	79.62
MPP	000447920	NUT	CAP, CYLINDER HEAD	7.00	EA	289.64	2,027.48
MPP	000447946	SHELL	BEARING, CAM	29.00	EA	169.04	4,902.22
MPP	000447961	STUD	DOUBLE END, CYLINDER HEAD	11.00	EA	158.28	1,741.03
MPP	000447987	GASKET	CYLINDER BLOCK	11.00	EA	509.05	5,599.54
MPP	000448001	SEAL	STRIP	10.00	FT	0.67	6.70
MPP	000448027	GASKET	FOWARD END COVER	9.00	EA	1.54	13.85
MPP	000448043	WASHER	LOCK, CYLINDER HEAD STUD	198.00	EA	0.72	142.56
MPP	000448068	GASKET	FLAT RECTANGULAR	32.00	EA	11.40	364.71
MPP	000448084	GASKET	FLAT ROUND	7.00	EA	16.03	112.21
MPP	000448100	GASKET	FLAT ROUND	11.00	EA	10.27	112.94
MPP	000448126	GASKET	FLAT RECTANGULAR	30.00	EA	8.14	244.12
MPP	000448142	SHIM	LAMINATED	4.00	EA	282.76	1,131.02
MPP	000448167	GASKET	FLAT RECTANGULAR	36.00	EA	2.37	85.35
MPP	000448183	GASKET	CYL BLOCK COVER PLATE	5.00	EA	15.60	78.00
MPP	000448209	RING	SEAL, PUSH ROD	11.00	EA	1.61	17.74
MPP	000448225	PIN	TAPERED	10.00	EA	2.97	29.67
MPP	000448241	GASKET	FLAT RECTANGULAR	30.00	EA	25.75	772.65

NOTE: SOH - Stock on Hand

Source: DARS 3342 Report (as of 5/31/07)

Maui Electric Company, Limited

MATERIALS PHYSICAL INVENTORY
MAALAEA POWER PLANT

WH	STOCK CODE	Item	Description	SOH	Unit	Price/ Unit	Total Cost/ Item
MPP	000448266	BUSHING	SLEEVE	18.00	EA	29.48	530.64
MPP	000448282	GASKET	CYLINDER BLOCK	36.00	EA	25.00	899.93
MPP	000448308	FLANGE	FF RD, UPPER	6.00	EA	0.00	0.00
MPP	000448324	WASHER	CYL LINER	48.00	EA	0.60	28.96
MPP	000448340	GASKET	FLAT,RD,UPPER	52.00	EA	16.13	838.56
MPP	000448365	LINER	POWER, MODIFIED (CYLINDER LINER G18-9-7)	4.00	EA	6,827.96	27,311.84
MPP	000448381	SEAL	O-RING	21.00	EA	32.49	682.33
MPP	000448407	FLANGE	FF RD, LOWER	2.00	EA	1,022.38	2,044.76
MPP	000448423	GASKET	FLAT RD,(LOWER)	49.00	EA	22.73	1,113.70
MPP	000448423	GASKET	FLAT RD,(LOWER)	49.00	EA	22.73	1,113.70
MPP	000448449	SEAL	INNER WATER	8.00	EA	1,136.44	9,091.56
MPP	000448464	ORING	VITON, CYL LINER	59.00	EA	36.72	2,166.59
MPP	000448480	SCREW	SOCKET HEAD, 1/2-13 X 1-1/2	283.00	EA	0.47	131.93
MPP	000448506	SCREW	SOCKET HEAD, 1/2-13 X 1-1/4	82.00	EA	0.56	45.67
MPP	000448522	WASHER	FINISHED	158.00	EA	10.29	1,625.82
MPP	000448548	GASKET	(INNER WATER)	28.00	EA	15.41	431.48
MPP	000448563	GASKET	(OUTER WATER)	17.00	EA	32.92	559.64
MPP	000448589	LINER	CYLINDER	0.00	EA	5,683.48	0.00
MPP	000448605	LINER	CYLINDER	16.00	EA	2,157.42	34,518.72
MPP	000448621	SEAL	INTEGRAL	22.00	EA	268.21	5,900.62
MPP	000448647	GASKET	FIRE, .130 THK	25.00	EA	86.86	2,171.53
MPP	000448662	GASKET	INNER WATER, .130 THK	109.00	EA	47.85	5,215.65
MPP	000448688	GASKET	OUTER WATER, .130 THK	89.00	EA	49.11	4,371.03
MPP	000448704	NUT	HI-DUTY, 3/4 OD	15.00	EA	0.00	0.00
MPP	000448720	HOSE	HIGH PRESSURE	9.00	EA	60.41	543.66
MPP	000448746	UNION	HI-DUTY, 3/4 OD	2.00	EA	7.34	14.68
MPP	000448761	HOSE	HIGH PRESSURE	10.00	EA	43.02	430.18
MPP	000448787	ELBOW	HI-DUTY, 3/4 OD	1.00	EA	0.00	0.00
MPP	000448803	CONNECTION	TUBE 1/4 OD X 1/4 PT	3.00	EA	2.07	6.21
MPP	000448829	TEE	TUBE 3/4 X3/4 OD X 1/2 PT	2.00	EA	27.25	54.50
MPP	000448845	CONNECTION	TUBE 3/8 OD X 1/2 PT	3.00	EA	6.53	19.59
MPP	000448860	CONNECTION	TUBE 1/4 OD X 1/2 PT	3.00	EA	5.66	16.98
MPP	000448886	CONNECTION	TUBE 3/4 OD X 3/4	2.00	EA	12.03	24.06
MPP	000448902	SEAT	VALVE, 5.004 - 5.003	9.00	EA	154.01	1,386.07
MPP	000448928	SEAT	VALVE, 5.006 - 5.005	9.00	EA	198.31	1,784.81
MPP	000448944	SEAT	VALVE, 5.005 - 5.004	48.00	EA	193.38	9,282.33
MPP	000448969	SEAT	VALVE, 5.016 - 5.015	13.00	EA	150.00	1,950.04
MPP	000448985	SEAT	VALVE, SPECIAL 5.086" O.D.	24.00	EA	117.89	2,829.43
MPP	000449009	CONNECTION	WATER, EXHAUST SIDE	6.00	EA	140.49	842.94
MPP	000449025	SEAT	VALVE, 5.008 - 5.007	21.00	EA	170.95	3,590.00
MPP	000449041	GASKET	CYLINDER HEAD	75.00	EA	1.32	99.26
MPP	000449066	SEAT	VALVE, 5.010 - 5.009	9.00	EA	138.78	1,248.98
MPP	000449082	CONNECTION	CAMSHAFT SIDE	6.00	EA	198.78	1,192.68
MPP	000449108	ELBOW	MALE, 3/8 OD X 3/8 PT	6.00	EA	24.13	144.77
MPP	000449124	GASKET	CYLINDER HEAD	18.00	EA	1.50	27.03
MPP	000449140	BUSHING	CYLINDER HEAD	27.00	EA	32.71	883.21
MPP	000449165	GASKET	CYLINDER HEAD	17.00	EA	1.68	28.50
MPP	000449181	GASKET	CYLINDER HEAD	42.00	EA	2.91	122.22
MPP	000449207	COVER	GAS INLET	3.00	EA	71.48	214.44
MPP	000449223	PLUG	CYLINDER HEAD	14.00	EA	11.65	163.10
MPP	000449249	GASKET	CYLINDER HEAD	12.00	EA	0.78	9.36
MPP	000449264	PLUG	PIPE, 1/4	17.00	EA	0.62	10.54
MPP	000449280	CONNECTION	FUEL DRAIN	7.00	EA	43.23	302.62
MPP	000449306	GASKET	FLAT RECTANGULAR	17.00	EA	35.81	608.75
MPP	000449322	GASKET KIT	CYLINDER HEAD	18.00	KT	98.30	1,769.41
MPP	000449348	ELBOW	CYLINDER HEAD	4.00	EA	6.81	27.24
MPP	000449363	SEAL	COVER (INSP.)	0.00	EA	20.55	0.00
MPP	000449389	HEAD	CYLINDER, COMPL.	3.00	EA	8,834.96	26,504.88
MPP	000449405	BOLT	HEX HEAD, 1/2-13 X1 1/4	14.00	EA	0.60	8.40
MPP	000449421	BUSHING	QUILL, 3/8 X 1/8	17.00	EA	3.53	60.01
MPP	000449447	SEAT	VALVE, K-7 ALLOY, 5.005-5.006	0.00	EA	105.21	0.00
MPP	000449462	SEAT	VALVE, K-7 ALLOY, 5.007-5.008	0.00	EA	104.11	0.00
MPP	000449488	SEAT	VALVE, K-7 ALLOY, 5.009-5.010	0.00	EA	104.11	0.00
MPP	000449504	SEAT	VALVE, K-7 ALLOY, 5.015-5.016	0.00	EA	104.11	0.00
MPP	000449520	SEAT	VALVE, K-7 ALLOY, 5.003-5.004	0.00	EA	104.11	0.00
MPP	000449546	SEAT	VALVE, K-7 ALLOY, 5.004-5.005	0.00	EA	105.21	0.00
MPP	000449561	SEAT	VALVE, K-7 ALLOY, O.S. 5.086 O.D.	0.00	EA	103.56	0.00

NOTE: SOH - Stock on Hand

Source: DARS 3342 Report (as of 5/31/07)

Maui Electric Company, Limited

MATERIALS PHYSICAL INVENTORY
MAALAEA POWER PLANT

WH	STOCK CODE	Item	Description	SOH	Unit	Price/ Unit	Total Cost/ Item
MPP	000449587	VALVE	EXHAUST (INCONEL)	0.00	EA	334.57	0.00
MPP	000449603	VALVE	EXHAUST	19.00	EA	426.28	8,099.33
MPP	000449629	VALVE	INLET (TRIBALLOY)	22.00	EA	524.57	11,540.51
MPP	000449645	RETAINER	MAIN VALVES	8.00	EA	39.29	314.29
MPP	000449660	VALVE	PREMIUM, INTAKE W/STELLITE #6	0.00	EA	316.11	0.00
MPP	000449686	KEEPER	VALVE STEM	20.00	EA	29.37	587.30
MPP	000449702	GASKET	BUSHING, INLET VALVE	350.00	EA	0.00	0.00
MPP	000449728	CAPSCREW	ALLEN HD 5/16 X 5/8 LG	71.00	EA	0.72	50.98
MPP	000449744	BUSHING	INTAKE VALVE	15.00	EA	743.51	11,152.66
MPP	000449769	BUSHING	EXHAUST VALVE	19.00	EA	216.58	4,114.99
MPP	000449785	SPRING	COMPONENT	8.00	EA	46.55	372.40
MPP	000449801	SHIM	FUEL INJ NOZZLE, 0.008IN, CODE K	90.00	EA	0.28	25.20
MPP	000449827	SHIM	FUEL INJ NOZZLE, 0.005IN, CODE K	78.00	EA	0.26	20.28
MPP	000449843	SHIM	FUEL INJ NOZZLE, 0.006IN, CODE K	48.00	EA	0.54	25.92
MPP	000449868	SHIM	FUEL INJ NOZZLE, 0.010IN, CODE K	101.00	EA	1.85	186.97
MPP	000449884	STUD	TAP END	10.00	EA	4.58	45.80
MPP	000449900	NUT ASSY	PLAIN, HEX	21.00	EA	132.24	2,777.04
MPP	000449926	NUT	HEX, 5/8 X 11	11.00	EA	0.43	4.69
MPP	000449942	SEAL	O-RING	18.00	EA	0.29	5.15
MPP	000449967	TIP ASSY	SPRAY NOZZLE	42.00	EA	396.17	16,639.33
MPP	000449983	ROD	SPRING GUIDE	36.00	EA	213.91	7,700.66
MPP	000450007	UNION	HALF, 1/4 OD X 1/8 PT	13.00	EA	1.51	19.64
MPP	000450023	SPRING	NOZZLE (CODE K)	12.00	EA	25.34	304.05
MPP	000450049	SPRING	SEAT (CODE K)	17.00	EA	54.47	925.97
MPP	000450064	GASKET	FUEL INJ NOZZLE (CODE K)	10.00	EA	1.64	16.40
MPP	000450080	GASKET	FUEL NOZZLE HOLDER	27.00	EA	2.09	56.48
MPP	000450106	PLATE	STOP (CODE K)	22.00	EA	83.41	1,834.99
MPP	000450122	HOLDER	FUEL NOZZLE	25.00	EA	432.66	10,816.50
MPP	000450148	SHIM	0.031 IN, CODE K	22.00	EA	0.26	5.72
MPP	000450163	CAMSHAFT	FUEL INJECTOR	1.00	EA	515.84	515.84
MPP	000450189	CAM	FUEL INJECTOR	26.00	EA	1,754.97	45,629.18
MPP	000450205	CAM	FUEL INJECTOR	17.00	EA	1,470.11	24,991.80
MPP	000450221	KEY	WOODRUFF #91	6.00	EA	0.76	4.54
MPP	000450247	GEAR	HELICAL	5.00	EA	271.20	1,356.00
MPP	000450262	PLATE	RING	2.00	EA	46.57	93.14
MPP	000450288	SCREW	SET (3/8-16 X 1-1/2)	20.00	EA	4.80	96.09
MPP	000450304	NUT	PLAIN HEX (3/8-16)	13.00	EA	1.75	22.78
MPP	000450320	RING	SPLIT RETAINING	11.00	EA	26.60	292.60
MPP	000450346	PIN	TAPER (#2 X 2-1/4)	14.00	EA	4.14	57.96
MPP	000450361	CAMSHAFT	FUEL INJECTOR	1.00	EA	2,074.22	2,074.22
MPP	000450387	BUTTON	FUEL INJECTOR	64.00	EA	67.60	4,326.11
MPP	000450403	BUSHING	FUEL INJECTOR	9.00	EA	43.20	388.80
MPP	000450429	VALVE	BLOCK, 4 PORT	3.00	EA	4,680.00	14,040.00
MPP	000450445	VALVE	BLOCK, 3 PORT	9.00	EA	3,608.80	32,479.20
MPP	000450460	PLATE, STEEL	(RIM)	8.00	EA	118.21	945.71
MPP	000450486	GASKET	FLAT RECTANGULAR	35.00	EA	6.99	244.73
MPP	000450502	GLASS	SIGHT	4.00	EA	95.88	383.53
MPP	000450528	SCREW	SOCKET HEAD	40.00	EA	1.26	50.40
MPP	000450544	SCREW	ADJUSTING	15.00	EA	232.85	3,492.70
MPP	000450569	NUT	JAM	21.00	EA	157.05	3,298.10
MPP	000450585	PUSH ROD ASSY, FUEL INJ.	FUEL INJECTOR	11.00	EA	406.75	4,474.27
MPP	000450601	SPRING RETAINER	FUEL INJECTOR	12.00	EA	121.92	1,463.08
MPP	000450627	SPRING	COMPN	5.00	EA	104.00	520.00
MPP	000450643	BUSHING	PUSH ROD (STEPPED)	41.00	EA	56.86	2,331.06
MPP	000450668	LEVER	FUEL INJECTOR	1.00	EA	1,513.01	1,513.01
MPP	000450684	BUTTON	PUSH ROD	26.00	EA	30.34	788.89
MPP	000450700	SHIM	FUEL INJECTOR	14.00	EA	7.58	106.12
MPP	000450726	GASKET	FUEL INJECTOR	76.00	EA	4.29	326.01
MPP	000450742	SCREW	SOCKET HEAD	16.00	EA	0.54	8.57
MPP	000450767	COVER	CASING	1.00	EA	34.91	34.91
MPP	000450783	GASKET	FUEL INJECTOR	20.00	EA	2.47	49.47
MPP	000450809	PLUG	PIPE	2.00	EA	3.04	6.08
MPP	000450825	KEY	SQUARE	10.00	EA	11.65	116.48
MPP	000450841	SCREW	SOCKET HEAD	27.00	EA	0.15	4.05
MPP	000450866	POINTER	FUEL INJECTOR	15.00	EA	180.39	2,705.85
MPP	000450882	SHAFT	FUEL INJECTOR	3.00	EA	609.09	1,827.28
MPP	000450908	GASKET	FUEL INJECTOR	28.00	EA	3.16	88.34

NOTE: SOH - Stock on Hand

Source: DARS 3342 Report (as of 5/31/07)

Maui Electric Company, Limited

MATERIALS PHYSICAL INVENTORY
MAALAEA POWER PLANT

WH	STOCK CODE	Item	Description	SOH	Unit	Price/ Unit	Total Cost/ Item
MPP	000450924	BEARING	FUEL INJECTOR	2.00	EA	50.00	100.00
MPP	000450940	BEARING	FUEL INJECTOR	4.00	EA	129.05	516.20
MPP	000450965	PIN	TAPERED (FUEL CAM DOOR)	46.00	EA	4.68	215.28
MPP	000450981	PLUG	FUEL INJECTOR	2.00	EA	18.65	37.30
MPP	000451005	SPACER	SLEEVE	4.00	EA	29.23	116.92
MPP	000451021	SCREW	ALLEN	38.00	EA	0.62	23.56
MPP	000451047	LOCKWASHER	3/8"	65.00	EA	0.25	16.25
MPP	000451062	CONNECTOR	3/8 OD X 1/8 PT	6.00	EA	7.84	47.04
MPP	000451088	CAGE	PISTON	6.00	EA	85.06	510.36
MPP	000451104	PISTON	AIR STARTING VALVE	7.00	EA	40.14	280.96
MPP	000451120	ORING	PISTON SEAL	13.00	EA	0.25	3.29
MPP	000451146	ELBOW	3/8 OD X 1/4 PT	7.00	EA	4.37	30.60
MPP	000451161	NUT	SPRING RETAINER	4.00	EA	89.71	358.83
MPP	000451187	RETAINER	SPRING-UPPER	16.00	EA	39.10	625.55
MPP	000451203	SPACER	AIR VALVE	8.00	EA	19.82	158.58
MPP	000451229	SPRING	AIR VALVE	3.00	EA	13.73	41.19
MPP	000451245	RETAINER	SPRING-LOWER	13.00	EA	80.29	1,043.82
MPP	000451260	RING	RETAINING-INTERNAL	32.00	EA	0.65	20.91
MPP	000451286	ORING	SEAL, VALVE CAGE	45.00	EA	0.42	18.72
MPP	000451302	PIN	SPIRAL SPRING, 3/16 X 1-1/4	62.00	EA	0.51	31.37
MPP	000451328	STUD	N.F. 5/8 X 5-7/8	14.00	EA	104.50	1,462.98
MPP	000451344	RING	PISTON	34.00	EA	4.43	150.63
MPP	000451369	CAGE	VALVE	1.00	EA	329.40	329.40
MPP	000451385	GASKET	VALVE	53.00	EA	2.26	119.67
MPP	000451401	RETAINER	PLUG	3.00	EA	233.03	699.09
MPP	000451427	REPAIR KIT	PRESS. REG.	1.00	EA	20.62	20.62
MPP	000451443	PLUG	VALVE	9.00	EA	374.03	3,366.24
MPP	000451468	VALVE	AIR (COMPLETE)	6.00	EA	553.90	3,323.40
MPP	000451484	VALVE	AIR STARTING	5.00	EA	672.89	3,364.46
MPP	000451500	GEAR	CAMSHAFT	4.00	EA	3,419.00	13,676.00
MPP	000451526	CAM	EXHAUST	5.00	EA	1,430.00	7,150.00
MPP	000451542	CAM	INTAKE	9.00	EA	2,242.63	20,183.69
MPP	000451567	KEY	CAMSHAFT	27.00	EA	43.71	1,180.18
MPP	000451583	KEY	CAMSHAFT	23.00	EA	29.17	670.96
MPP	000451609	KEY	CAMSHAFT	37.00	EA	17.78	657.88
MPP	000451625	SEAL	OIL	2.00	EA	2.84	5.67
MPP	000451641	GOVERNOR	OVERSPEED	1.00	EA	3,732.98	3,732.98
MPP	000451666	BEARING	OVERSPEED	1.00	EA	0.00	0.00
MPP	000451682	YOKE	OVERSPEED	2.00	EA	148.57	297.14
MPP	000451708	PINS	WEIGHT	4.00	EA	2.86	11.44
MPP	000451724	PINS	LIFT	2.00	EA	5.70	11.40
MPP	000451740	COLLAR	THRUST	12.00	EA	13.78	165.36
MPP	000451765	SLEEVE	THRUST	2.00	EA	15.91	31.82
MPP	000451781	SPRING	OVERSPEED	1.00	EA	6.63	6.63
MPP	000451807	GASKET	OVERSPEED	19.00	EA	2.32	44.15
MPP	000451823	BEARING	BALL	4.00	EA	18.36	73.42
MPP	000451849	BEARING	BALL	3.00	EA	21.72	65.15
MPP	000451864	BEARING	THRUST	1.00	EA	29.80	29.80
MPP	000451880	SEAL	OIL	2.00	EA	7.99	15.98
MPP	000451906	RING	RETAINING	6.00	EA	0.16	0.96
MPP	000451922	PIN	ROLL	2.00	EA	0.29	0.58
MPP	000451948	PIN	SPRING	1.00	EA	0.38	0.38
MPP	000451963	PIN	ROLL	6.00	EA	0.22	1.32
MPP	000451989	PIN	ROLL	1.00	EA	0.23	0.23
MPP	000452003	RING	SEAL-CASE TO BASE	1.00	EA	2.30	2.30
MPP	000452029	GASKET	OVERSPEED GOV	1.00	EA	0.10	0.10
MPP	000452045	RETAINER	OIL SEAL	1.00	EA	3.15	3.15
MPP	000452060	SEAL	OIL	1.00	EA	7.00	7.00
MPP	000452086	RING	SNAP	1.00	EA	0.25	0.25
MPP	000452102	BEARING	OVERSPEED GOV	1.00	EA	4.75	4.75
MPP	000452128	SHAFT	DRIVE	1.00	EA	38.50	38.50
MPP	000452144	GASKET	OVERSPEED GOV	5.00	EA	5.31	26.55
MPP	000452169	GASKET	OVERSPEED GOV	1.00	ST	22.08	22.08
MPP	000452185	GEAR	PINION	2.00	EA	139.72	279.44
MPP	000452201	NUT	SELF LOCK, ELASTIC STOP 3/4-16	10.00	EA	2.24	22.40
MPP	000452227	ACTUATOR	WOODWARD	1.00	EA	3,819.63	3,819.63
MPP	000452243	MVP ASSY	WOODWARD	0.00	EA	1,025.00	0.00

NOTE: SOH - Stock on Hand

Source: DARS 3342 Report (as of 5/31/07)

Maui Electric Company, Limited

MATERIALS PHYSICAL INVENTORY
MAALAEA POWER PLANT

WH	STOCK CODE	Item	Description	SOH	Unit	Price/ Unit	Total Cost/ Item
MPP	000452268	PIN	DOWEL, 3/16 X 7/8	10.00	EA	1.73	17.29
MPP	000452284	HOUSING	FUEL PUMP	0.00	EA	9,360.00	0.00
MPP	000452300	BARREL	PLUNGER	3.00	EA	826.80	2,480.40
MPP	000452326	SPRING	PLUNGER	6.00	EA	59.54	357.24
MPP	000452342	RETAINER	PLUNGER SPRING	3.00	EA	1,123.80	3,371.41
MPP	000452367	PLUG	CROSS HEAD	3.00	EA	563.64	1,690.92
MPP	000452383	BUSHING	FUEL PUMP	8.00	EA	68.03	544.24
MPP	000452409	CROSSHEAD	FUEL PUMP (COMPR ROD)	2.00	EA	2,172.88	4,345.75
MPP	000452425	COLLAR	FUEL PUMP	9.00	EA	115.09	1,035.81
MPP	000452441	RING	FUEL PUMP	3.00	EA	14.04	42.12
MPP	000452466	PIN	FUEL PUMP	14.00	EA	84.27	1,179.75
MPP	000452482	SPRING	FUEL PUMP	9.00	EA	16.40	147.60
MPP	000452508	ORING	SEAL	5.00	EA	8.96	44.81
MPP	000452524	GLAND	DISCHARGE BLOCK	5.00	EA	370.14	1,850.70
MPP	000452540	BLOCK	FUEL DISCHARGE	6.00	EA	1,011.62	6,069.70
MPP	000452565	SCREW	SOCKET	49.00	EA	2.87	140.54
MPP	000452581	GASKET	FUEL PUMP	19.00	EA	7.47	141.87
MPP	000452607	GASKET	FUEL PUMP	4.00	EA	4.11	16.43
MPP	000452623	SEAT	VALVE	6.00	EA	596.12	3,576.73
MPP	000452649	DISTRIBUTOR	STARTING AIR	1.00	EA	500.00	500.00
MPP	000452664	RING	GEAR	10.00	EA	557.85	5,578.52
MPP	000452680	DOWEL	TAPERED PIN	9.00	EA	1.70	15.30
MPP	000452706	SHIM	LAMINATED	6.00	EA	36.68	220.08
MPP	000452722	SPROCKET	RLR CHAIN	1.00	EA	2,246.40	2,246.40
MPP	000452748	SHIM	LAMINATED	9.00	EA	42.11	378.96
MPP	000452763	BOLT	HEX HEAD	8.00	EA	12.71	101.64
MPP	000452789	BEARING	FUEL PUMP DRIVE	1.00	EA	1,557.23	1,557.23
MPP	000452805	BUSHING	FLANGED	3.00	EA	210.81	632.43
MPP	000452821	GASKET	FUEL PUMP DRIVE	6.00	EA	8.65	51.89
MPP	000452847	GEAR	FUEL PUMP DRIVE	0.00	EA	5,524.48	0.00
MPP	000452862	SPROCKET	RLR CHAIN	1.00	EA	1,311.54	1,311.54
MPP	000452888	BOLT	HEX HEAD	19.00	EA	3.70	70.30
MPP	000452904	GASKET	FUEL PUMP DRIVE	9.00	EA	1.26	11.34
MPP	000452920	RETAINER	BEARING	1.00	EA	226.58	226.58
MPP	000452946	BUSHING	QUILL	2.00	EA	12.79	25.58
MPP	000452961	TUBE	OIL	1.00	EA	23.95	23.95
MPP	000452987	SHAFT	FUEL PUMP DRIVE	0.00	EA	2,446.96	0.00
MPP	000453001	GEAR	FUEL PUMP DRIVE	0.00	EA	7,915.34	0.00
MPP	000453027	SHAFT	EXTENSION	2.00	EA	3,852.77	7,705.54
MPP	000453043	WASHER	FINISHED	12.00	EA	1.20	14.40
MPP	000453068	GASKET	STARTING AIR MANIFOLD	22.00	EA	1.03	22.63
MPP	000453084	MANIFOLD	EXHAUST	0.00	EA	52,495.01	0.00
MPP	000453100	JOINT	EXPANSION	14.00	EA	1,246.23	17,447.26
MPP	000453126	GASKET	TURBO TO ADAPTER	6.00	EA	62.01	372.06
MPP	000453142	GASKET	MNFLD TO ADAPTER	5.00	EA	226.53	1,132.64
MPP	000453167	GASKET	METAL CLAD	15.00	EA	171.65	2,574.75
MPP	000453183	BOLT	HEX HEAD, 5/8-11 X 1-1/2"	16.00	EA	6.15	98.40
MPP	000453209	BOLT	HEX HEAD, 3/4-10 X 1-3/4"	52.00	EA	35.66	1,854.32
MPP	000453225	GASKET	EXHAUST MANIFOLD	59.00	EA	32.66	1,927.18
MPP	000453241	GASKET	FLAT OVAL	26.00	EA	4.20	109.17
MPP	000453266	BOLT	S.S., 5/8"-11 X 1-1/2"	20.00	EA	1.02	20.40
MPP	000453282	BOLT	SS HEX HEAD, 5/8"-11 NC X1-3/4"	32.00	EA	1.06	33.92
MPP	000453308	BOLT	SS HEX HEAD, 1/2"-13 NC X 2"	24.00	EA	0.27	6.48
MPP	000453324	BOLT	SS HEX NUTS, 1/2"-13 NC	24.00	EA	0.58	13.92
MPP	000453340	ADAPTER	W/O WASTE GATE	1.00	EA	2,708.65	2,708.65
MPP	000453365	BUSHING	ROCKER	20.00	EA	51.21	1,024.14
MPP	000453381	BEARING	PUSH ROD	49.00	EA	10.00	490.00
MPP	000453407	BEARING	PUSH ROD	8.00	EA	11.00	88.00
MPP	000453423	BEARING	SUPPORT	1.00	EA	267.42	267.42
MPP	000453449	SHAFT	ROCKER	9.00	EA	795.75	7,161.72
MPP	000453464	STUD	EXHAUST ROCKER, 1-14 X 7-7/8	13.00	EA	18.83	244.76
MPP	000453480	NUT	HEX, 1"-14	15.00	EA	1.68	25.20
MPP	000453506	BOLT	HEX HEAD, 1/2 -13 X 1-1/2	22.00	EA	0.63	13.86
MPP	000453522	SPACER	SLEEVE (DOWEL)	15.00	EA	12.90	193.44
MPP	000453548	ROCKER	EXHAUST	1.00	EA	307.00	307.00
MPP	000453563	ROCKER	INLET	6.00	EA	733.56	4,401.36
MPP	000453589	ARM	ROCKER	2.00	EA	2,978.35	5,956.70

NOTE: SOH - Stock on Hand

Source: DARS 3342 Report (as of 5/31/07)

Maui Electric Company, Limited

MATERIALS PHYSICAL INVENTORY
MAALAEA POWER PLANT

WH	STOCK CODE	Item	Description	SOH	Unit	Price/ Unit	Total Cost/ Item
MPP	000453605	LIFTER	HYD VALVE	17.00	EA	103.33	1,756.59
MPP	000453621	SCREW	ADJUSTING	13.00	EA	47.66	619.62
MPP	000453647	NUT	JAM	6.00	EA	0.77	4.62
MPP	000453662	PLUG	PIPE	14.00	EA	3.51	49.14
MPP	000453688	ELBOW	TUBE, 3/8 NPT X 3/8	11.00	EA	6.45	70.95
MPP	000453704	RING	RETAINING	49.00	EA	0.46	22.42
MPP	000453720	JOINT	TAPPET BALL	5.00	EA	147.19	735.96
MPP	000453746	CROSSHEAD	(SUBASSEMBLY)	8.00	EA	175.68	1,405.44
MPP	000453761	ROD	PUSH	5.00	EA	69.90	349.50
MPP	000453787	ROD	PUSH	12.00	EA	97.86	1,174.32
MPP	000453803	PLUG	PIPE, 1/16"	18.00	EA	0.67	12.06
MPP	000453829	TUBE	COPPER, 1/4 O.D.	5.00	EA	0.62	3.10
MPP	000453845	MANOMETER	GAUGE, CRANKCASE	1.00	EA	635.51	635.51
MPP	000453860	FILTER	AIR	2.00	EA	39.94	79.88
MPP	000453886	REGULATOR	PRESSURE	3.00	EA	148.68	446.03
MPP	000453902	REPAIR KIT	REGULATOR	1.00	EA	76.72	76.72
MPP	000453928	KIT	RELIEVING PISTON	2.00	EA	18.21	36.42
MPP	000453944	KIT	CAP & SEAL	3.00	EA	12.61	37.83
MPP	000453969	VALVE	3-WAY	0.00	EA	526.92	0.00
MPP	000453985	REGULATOR	PRESSURE	1.00	EA	123.60	123.60
MPP	000454009	VALVE	PILOT, AIR	3.00	EA	405.85	1,217.55
MPP	000454025	DIAPHRAGM	ENGINE MTD	1.00	EA	7.26	7.26
MPP	000454041	DIAPHRAGM	ENGINE MTD	8.00	EA	13.85	110.80
MPP	000454066	GASKET	FLAT RD	4.00	EA	21.67	86.68
MPP	000454082	COUPLING	SPIDER, (FLOATING MEMBER)	1.00	EA	758.22	758.22
MPP	000454108	GASKET	FLAT RD	20.00	EA	11.16	223.18
MPP	000454124	GASKET	FLAT RD	24.00	EA	4.93	118.40
MPP	000454140	PUMP	LUBE OIL	1.00	EA	15,336.26	15,336.26
MPP	000454165	VALVE	INDICATOR	6.00	EA	84.97	509.81
MPP	000454181	CONNECTION	INDICATING COCK	2.00	EA	373.42	746.83
MPP	000454207	GASKET	INDICATOR CONN.	32.00	EA	0.78	25.09
MPP	000454223	GROMMET	CONNECTION	90.00	EA	6.81	612.55
MPP	000454249	FLANGE	CONNECTION	2.00	EA	189.23	378.46
MPP	000454264	GASKET	INDICATOR CONN	49.00	EA	1.09	53.53
MPP	000454280	INSERTS	HELICOIL	4.00	EA	25.78	103.12
MPP	000454306	BUSHING	FUEL BOOSTER PUMP	4.00	EA	11.77	47.08
MPP	000454322	ELBOW	1"OD X 1"PT	4.00	EA	27.82	111.28
MPP	000454348	SEAL	OIL	0.00	EA	2.84	0.00
MPP	000454363	CONNECTOR	TUBE, 1"OD X 1"PT	3.00	EA	97.40	292.20
MPP	000454389	GASKET	FUEL BOOSTER PUMP	2.00	EA	5.14	10.28
MPP	000454405	TUBING	COPPER, 1" OD	16.00	EA	25.88	414.08
MPP	000454421	COUPLING	FUEL BOOSTER PUMP	3.00	EA	89.86	269.58
MPP	000454447	SPIDER	COUPLING, POLY-DISC	6.00	EA	24.63	147.79
MPP	000454462	VALVE	(RELIEF 1") 50PSI	1.00	EA	231.03	231.03
MPP	000454488	PUMP	FUEL, L.P.	2.00	EA	2,741.85	5,483.70
MPP	000454504	PIN	TAPER, #3 7/32" X 3/4"	50.00	EA	0.50	25.00
MPP	000454520	PIN	TAPER, #2 3/16" X 1"	25.00	EA	0.53	13.25
MPP	000454546	PIN	TAPER, #2 3/16" X 2"	0.00	EA	0.00	0.00
MPP	000454561	PIN	TAPER, #0 5/32" X 1-1/2	40.00	EA	0.62	24.80
MPP	000454587	LEVER	OFFSET	1.00	EA	873.60	873.60
MPP	000454603	BOLT	HEX HEAD, 1/2-20 X 2	5.00	EA	0.55	2.75
MPP	000454629	PIN	TAPER	33.00	EA	0.77	25.46
MPP	000454645	NUT	HEX, 1/2-20	13.00	EA	0.70	9.10
MPP	000454660	ROD END	BALL, 1/2" FEMALE THRD	2.00	EA	35.86	71.72
MPP	000454686	NUT	JAM	3.00	EA	0.47	1.41
MPP	000454702	BUSHING	BRONZE	36.00	EA	18.33	659.99
MPP	000454728	ROD	CONTROL	2.00	EA	17.04	34.08
MPP	000454744	LEVER	STRAIGHT	3.00	EA	132.60	397.80
MPP	000454769	SPRING	EXTENSION	5.00	EA	368.65	1,843.25
MPP	000454785	ROD END	BALL, 1/2 MALE THRD	7.00	EA	35.71	249.98
MPP	000454801	CYLINDER	ACCELERATION	3.00	EA	307.19	921.58
MPP	000454827	ROD	END	3.00	EA	38.66	115.98
MPP	000454843	LINE	FUEL	3.00	EA	179.20	537.60
MPP	000454868	LINE	FUEL, 5/16" O.D.	2.00	EA	287.40	574.80
MPP	000454884	CLAMP	TUBING	2.00	EA	7.93	15.86
MPP	000454900	CONNECTOR	TUBING, 5/16"O.D. X 1/8"PT	10.00	EA	29.10	291.00
MPP	000454926	CLAMP	TUBING	12.00	EA	2.29	27.46

NOTE: SOH - Stock on Hand

Source: DARS 3342 Report (as of 5/31/07)

Maui Electric Company, Limited

MATERIALS PHYSICAL INVENTORY
MAALAEA POWER PLANT

WH	STOCK CODE	Item	Description	SOH	Unit	Price/ Unit	Total Cost/ Item
MPP	000454942	CONNECTOR	TUBING, 5/16" O.D. X 1/8"PT	29.00	EA	52.93	1,534.97
MPP	000454967	FERRULE	TUBE FITTING	7.00	EA	2.82	19.74
MPP	000454983	NUT	TUBING	7.00	EA	2.36	16.52
MPP	000455006	BOWL	TRANSPARENT	2.00	EA	9.83	19.66
MPP	000455022	BOWL	METAL	2.00	EA	18.44	36.88
MPP	000455048	ORING	FUEL PRIMING PUMP	12.00	EA	0.94	11.28
MPP	000455063	TEE	COUPLING, 1/2	13.00	EA	60.50	786.50
MPP	000455089	FERRULE	FUEL LINE	11.00	EA	0.99	10.89
MPP	000455105	BOTTLE	ACCUMULATOR	1.00	EA	883.20	883.20
MPP	000455121	FERRULE	FUEL LINE	12.00	EA	0.95	11.40
MPP	000455147	BOTTLE	ACCUMULATOR	1.00	EA	263.20	263.20
MPP	000455162	NUT	FUEL LINE	12.00	EA	0.91	10.92
MPP	000455188	BOTTLE	ACCUMULATOR	0.00	EA	360.00	0.00
MPP	000455204	FERRULE	5/8"	11.00	EA	0.93	10.23
MPP	000455220	LINE	FUEL NOZZLE	7.00	EA	1,377.57	9,642.96
MPP	000455246	ADAPTOR	FUEL LINE	4.00	EA	85.25	341.00
MPP	000455261	FERRULE	TUBE FITTING	14.00	EA	2.23	31.18
MPP	000455287	NUT	TUBING, 1/2 OD	9.00	EA	73.68	663.16
MPP	000455303	CONNECTION	FUEL INJ INLET	36.00	EA	364.91	13,136.71
MPP	000455329	NUT	TUBING	7.00	EA	8.65	60.56
MPP	000455345	NUT	TUBING	9.00	EA	83.06	747.52
MPP	000455360	UNION	COUPLING SPECIAL	7.00	EA	365.10	2,555.72
MPP	000455386	CLAMP	TUBING	7.00	EA	50.39	352.71
MPP	000455402	CLAMP	TUBING	12.00	EA	17.13	205.53
MPP	000455428	CLAMP	TUBING	8.00	EA	10.40	83.20
MPP	000455444	CLAMP	TUBING	6.00	EA	32.61	195.66
MPP	000455469	CLAMP	PIPE	3.00	EA	32.61	97.83
MPP	000455485	CLAMP	PIPE	6.00	EA	93.59	561.52
MPP	000455501	ADAPTER	TUBE	27.00	EA	35.73	964.75
MPP	000455527	NUT	1/2" OD	22.00	EA	12.51	275.22
MPP	000455543	LINE	FUEL	2.00	EA	33.28	66.56
MPP	000455568	TEE	COUPLING 1/2"	7.00	EA	69.00	482.98
MPP	000455584	COUPLING	UNION, 1/2" O.D.	3.00	EA	20.62	61.87
MPP	000455600	LINE	FUEL, 1/2 O.D.	40.00	FT	17.32	692.82
MPP	000455626	CHAIN	ROLLER, MAIN DR	1.00	EA	1,060.00	1,060.00
MPP	000455642	LINKS	ACME CONNECTING	2.00	EA	0.43	0.86
MPP	000455667	CHAIN	ROLLER, GOV DR	3.00	EA	21.84	65.52
MPP	000455683	GASKET	MAIN	1.00	EA	6.75	6.75
MPP	000455709	GASKET	INSPECTION PLATE GOVERNOR DRIVE	5.00	EA	14.49	72.43
MPP	000455725	GASKET	MAIN	3.00	EA	72.92	218.75
MPP	000455741	GASKET	INSPECTION PLATE GOVERNOR DRIVE	17.00	EA	13.98	237.62
MPP	000455766	GASKET	MAIN	2.00	EA	7.46	14.92
MPP	000455782	GASKET	MAIN	3.00	EA	3.14	9.42
MPP	000455808	GASKET	MAIN	0.00	EA	19.97	0.00
MPP	000455824	GASKET	MAIN	3.00	EA	5.39	16.17
MPP	000455840	METER	FUEL OIL FLOW	0.00	EA	758.16	0.00
MPP	000455865	SWITCH	PRESSURE	4.00	EA	0.00	0.00
MPP	000455881	VALVE	3 WAY	5.00	EA	453.47	2,267.33
MPP	000455907	VALVE	CONTROL	2.00	EA	36.88	73.76
MPP	000455923	VALVE	JACKET WATER TEMP S/D	1.00	EA	257.90	257.90
MPP	000455949	REPAIR KIT	3-WAY VALVE	4.00	EA	34.52	138.07
MPP	000455964	VALVE	RATIO RELAY, 1 TO 1	2.00	EA	718.74	1,437.47
MPP	000455980	VALVE	RATIO RELAY	3.00	EA	858.55	2,575.66
MPP	000456004	REPAIR KIT	RATIO RELAY	6.00	EA	880.83	5,284.99
MPP	000456020	VALVE	AIR REGULATING	4.00	EA	55.43	221.72
MPP	000456046	VALVE	LO PRESS, S/D	1.00	EA	274.51	274.51
MPP	000456061	WASHER	CONTROL DIAGRAM	12.00	EA	0.57	6.84
MPP	000456087	ORING	CONTROL DIAGRAM	2.00	EA	0.25	0.50
MPP	000456103	REPAIR KIT	PRESS. REGULATOR	1.00	EA	16.14	16.14
MPP	000456129	ORING	CONTROL DIAGRAM	3.00	EA	0.34	1.02
MPP	000456145	DIAPHRAGM	INPUT, RATIO RELAY	6.00	EA	26.36	158.16
MPP	000456160	SEAT	VALVE	2.00	EA	0.60	1.20
MPP	000456186	DIAPHRAGM	CONTROL DIAGRAM	0.00	EA	3.72	0.00
MPP	000456202	DIAPHRAGM	BALANCING	5.00	EA	26.36	131.80
MPP	000456228	DIAPHRAGM	CONTROL DIAGRAM	4.00	EA	7.52	30.08
MPP	000456244	PLUG	VALVE PLUG	6.00	EA	24.12	144.72
MPP	000456269	DIAPHRAGM	CONTROL DIAGRAM	3.00	EA	4.67	14.01

NOTE: SOH - Stock on Hand

Source: DARS 3342 Report (as of 5/31/07)

Maui Electric Company, Limited

MATERIALS PHYSICAL INVENTORY
MAALAEA POWER PLANT

WH	STOCK CODE	Item	Description	SOH	Unit	Price/ Unit	Total Cost/ Item
MPP	000456285	ELEMENT	FILTER, VAN, AIR	2.00	EA	81.17	162.34
MPP	000456301	SPRING	CONTROL DIAGRAM	4.00	EA	1.59	6.36
MPP	000456327	VALVE	CONTROL DIAGRAM	4.00	EA	1.03	4.12
MPP	000456343	ROD	PUSH	4.00	EA	6.11	24.44
MPP	000456368	ELEMENT	PREFILTER	3.00	EA	105.49	316.47
MPP	000456384	GASKET	COVER PLATE	6.00	EA	2.08	12.48
MPP	000456400	SEAL	STRIP, 80", 5/16 SQ.	29.00	FT	0.72	20.86
MPP	000456426	GASKET	COVER PLATE	4.00	EA	101.33	405.32
MPP	000456442	GASKET	COVER	3.00	EA	11.09	33.27
MPP	000456467	GASKET	COVER PLATE	4.00	EA	2.24	8.96
MPP	000456483	REGULATOR	OIL LEVEL	1.00	EA	273.16	273.16
MPP	000456509	METER	REN MODEL MRA, S/N 27113	2.00	EA	779.48	1,558.96
MPP	000456525	GASKET	SIGHT GLASS	4.00	EA	0.83	3.32
MPP	000456541	WASHER	SIGHT GLASS	9.00	EA	0.62	5.58
MPP	000456566	GASKET	SIGHT GLASS, CORK	12.00	EA	0.62	7.44
MPP	000456582	GLASS	SIGHT	4.00	EA	14.98	59.92
MPP	000456608	REPAIR KIT	REGULATING VALVE, 3/4" & 1" MODELS	5.00	EA	55.45	277.25
MPP	000456624	HOSE	HI PRESSURE	1.00	EA	50.11	50.11
MPP	000456640	COUPLING	W/GASKET	22.00	EA	20.98	461.56
MPP	000456665	GASKET	(VICTAULIC) 2-1/2"	18.00	EA	19.16	344.93
MPP	000456681	GASKET	PIPING	4.00	EA	2.00	8.00
MPP	000456707	VALVE	REGULATING	1.00	EA	889.89	889.89
MPP	000456723	BUSHING	L. O. KEEP WARM PUMP	7.00	EA	33.20	232.39
MPP	000456749	RING	RETAINING	5.00	EA	4.83	24.13
MPP	000456764	IDLER GEAR	SHAFT ASSY, L. O. KEEP WARM PUMP	1.00	EA	790.40	790.40
MPP	000456780	GEAR	DRIVE	1.00	EA	597.74	597.74
MPP	000456806	KEY	SPECIAL, WOODRUFF	2.00	EA	12.48	24.96
MPP	000456822	BEARING	CAGE, L.O. KEEP WARM PUMP	1.00	EA	184.36	184.36
MPP	000456848	SHAFT	DRIVE	1.00	EA	426.66	426.66
MPP	000456863	GASKET	BYPASS PUMP	6.00	EA	2.13	12.78
MPP	000456889	BUSHING	BYPASS PUMP	0.00	EA	0.00	0.00
MPP	000456905	SHAFT	DRIVE, F.O. BOOSTER PUMP	1.00	EA	95.68	95.68
MPP	000456921	GASKET	L. O. BYPASS POWER PUMP	2.00	EA	5.82	11.64
MPP	000456947	BUSHING	BEARING	13.00	EA	30.74	399.64
MPP	000456962	GASKET	FUEL OIL BOOSTER PUMP	3.00	EA	8.17	24.52
MPP	000456988	IDLER GEAR	SHAFT, F. O. BOOSTER PUMP	1.00	EA	180.90	180.90
MPP	000457002	GASKET	FUEL OIL BOOSTER PUMP	9.00	EA	8.51	76.59
MPP	000457028	BACKPLATE ASSY	FUEL OIL BOOSTER PUMP	1.00	EA	195.03	195.03
MPP	000457044	GEAR	DRIVE	3.00	EA	470.08	1,410.24
MPP	000457069	BEARING	CAGE	2.00	EA	58.36	116.72
MPP	000457085	SEAL	MECHANICAL	3.00	EA	101.04	303.11
MPP	000457101	RING	RETAINING (SPEC)	6.00	EA	12.15	72.89
MPP	000457127	SEAL, MECHANICAL	408T; 01000 T-21 BF50171	4.00	EA	217.72	870.86
MPP	000457143	BEARING	KEEP WARM PUMP	3.00	EA	28.88	86.63
MPP	000457168	RING	RETAINING, F.O. BOOSTER	6.00	EA	17.47	104.83
MPP	000457184	KEY	F.O. BOOSTER PUMP	3.00	EA	11.65	34.94
MPP	000457200	GASKET	L.O. KEEP WARM PUMP	2.00	EA	30.00	60.00
MPP	000457226	GUIDE	VALVE	0.00	EA	64.68	0.00
MPP	000457242	SPRING	SPEED INDICATOR	0.00	EA	0.72	0.00
MPP	000457267	ORING	CENTRIFUGE	0.00	EA	4.49	0.00
MPP	000457283	INDICATOR	WHEEL SPEED	0.00	EA	38.55	0.00
MPP	000457309	GASKET	DIAPHRAGM	0.00	EA	0.94	0.00
MPP	000457325	PINS	SHEAR	0.00	EA	1.23	0.00
MPP	000457341	DIAPHRAGM	CENTRIFUGE	0.00	EA	3.28	0.00
MPP	000457366	RING	SMALL BOWL	0.00	EA	1.91	0.00
MPP	000457382	GASKET	CENTRIFUGE	0.00	EA	0.00	0.00
MPP	000457408	PLUG	VALVE	0.00	EA	66.61	0.00
MPP	000457424	STATOR	SHER-WATER INDUSTRIAL PUMP	1.00	EA	24.13	24.13
MPP	000457440	GASKET	SEAL BOX	0.00	EA	0.00	0.00
MPP	000457465	ROTOR	CENTRIFUGE	0.00	EA	131.04	0.00
MPP	000457481	JOINT	FLEXIBLE	0.00	EA	70.24	0.00
MPP	000457507	SPRING	BOTTOM SCREW	0.00	EA	8.28	0.00
MPP	000457523	SCREW	BOTTOM	0.00	EA	62.07	0.00
MPP	000457549	GASKET	BOTTOM SCREW	0.00	EA	0.67	0.00
MPP	000457564	SEAL	MECHANICAL	0.00	EA	14.56	0.00
MPP	000457580	BLOCKS	FRICTION, 1750 RPM	0.00	EA	4.28	0.00
MPP	000457606	COUPLING	SHAFT	0.00	EA	60.32	0.00

NOTE: SOH - Stock on Hand

Source: DARS 3342 Report (as of 5/31/07)

Maui Electric Company, Limited

MATERIALS PHYSICAL INVENTORY
MAALAEA POWER PLANT

WH	STOCK CODE	Item	Description	SOH	Unit	Price/ Unit	Total Cost/ Item
MPP	000457622	SPRING	SPEED INDICATOR	0.00	EA	0.90	0.00
MPP	000457648	CLAMP	CENTRIFUGE	0.00	EA	0.00	0.00
MPP	000457663	PAD	CENTRIFUGE	0.00	EA	12.23	0.00
MPP	000457689	SCREW	CENTRIFUGE	0.00	EA	0.00	0.00
MPP	000457705	SPRING	BRAKE	0.00	EA	8.64	0.00
MPP	000457721	PIN	CENTRIFUGE	0.00	EA	0.11	0.00
MPP	000457747	SPRING	FRAME COVER & INLET	0.00	EA	3.34	0.00
MPP	000457762	SPRING	PLUNGER	0.00	EA	7.10	0.00
MPP	000457788	LOCK NUT	BOWL SPINDLE	0.00	EA	1.02	0.00
MPP	000457804	PLUNGER	BRAKE	0.00	EA	87.68	0.00
MPP	000457820	LOCK WASHER	BOWL SPINDLE	0.00	EA	1.08	0.00
MPP	000457846	CASE	CENTRIFUGE	1.00	EA	72.89	72.89
MPP	000457861	BALL	CHECK	0.00	EA	0.51	0.00
MPP	000457887	PLUNGER	BOTTOM SCREW	0.00	EA	8.80	0.00
MPP	000457903	FACEPLATE ASSY	ROPER PUMP	1.00	EA	76.41	76.41
MPP	000457929	RING	FLEXIBLE BOWL SPINDLE	0.00	EA	15.97	0.00
MPP	000457945	CASE	08 CENTRIFUGE	1.00	EA	76.83	76.83
MPP	000457960	RING	SEAL	0.00	EA	14.76	0.00
MPP	000457986	CASE	12 CENTRIFUGE	1.00	EA	81.26	81.26
MPP	000458000	SLEEVE	BEARING, BOWL SPINDLE	0.00	EA	194.42	0.00
MPP	000458026	SHAFT	DRIVE 08	1.00	EA	75.78	75.78
MPP	000458042	GASKET	BOWL SPINDLE	0.00	EA	9.99	0.00
MPP	000458067	GEAR	DRIVE 08	1.00	EA	72.39	72.39
MPP	000458083	PLATE	COVER, BOWL SPINDLE	0.00	EA	40.30	0.00
MPP	000458109	BEARING	BALL	0.00	EA	18.08	0.00
MPP	000458125	IDLER GEAR	SHAFT 08	1.00	EA	128.39	128.39
MPP	000458141	KEY	08, 12 CENTRIFUGE	1.00	EA	3.13	3.13
MPP	000458166	SHELL	WORM SCREW, 1750 RPM	0.00	EA	212.87	0.00
MPP	000458182	KEY	08 CENTRIFUGE	2.00	EA	3.13	6.26
MPP	000458208	BEARING	STEP	0.00	EA	130.72	0.00
MPP	000458224	WHEEL	WORM 1750 RPM	0.00	EA	594.23	0.00
MPP	000458240	SCREW	STOP	0.00	EA	58.94	0.00
MPP	000458265	TUBE	REGULATING	0.00	EA	146.45	0.00
MPP	000458281	SPRING	HOUSING PLATE & PUMP	0.00	EA	1.00	0.00
MPP	000458307	HUB	CENTRIFUGE	0.00	EA	771.95	0.00
MPP	000458323	GEAR	PUMP DRIVE, 1725 RPM	0.00	EA	332.78	0.00
MPP	000458349	GEAR	INLET	0.00	EA	0.00	0.00
MPP	000458364	GEAR	OUTLET	0.00	EA	0.00	0.00
MPP	000458380	GUIDE	FRAME COVER AND INLET	0.00	EA	1.48	0.00
MPP	000458406	WASHER	THRUST, WORM WHEEL & FRICTION CLUTCH	0.00	EA	9.32	0.00
MPP	000458422	CLAMP	FRAME PART	0.00	EA	0.00	0.00
MPP	000458448	SPINDLE	BOWL	0.00	EA	447.86	0.00
MPP	000458463	GASKET	NITRILE "A"	0.00	EA	17.56	0.00
MPP	000458489	PACKING	INLET & OUTLET PUMP	0.00	EA	2.35	0.00
MPP	000458505	GASKET	NITRILE "B"	0.00	EA	31.19	0.00
MPP	000458521	BEARING	HOUSING PLATE & PUMP	0.00	EA	50.89	0.00
MPP	000458547	RING	SEAL	0.00	EA	6.06	0.00
MPP	000458562	GASKET	LARGE BOWL	0.00	EA	5.37	0.00
MPP	000458588	GASKET	NITRILE RING	0.00	EA	6.24	0.00
MPP	000458604	PLATE	TOP BEARING	0.00	EA	202.12	0.00
MPP	000458620	BLOCKS	SPACER, 1750 RPM	0.00	EA	3.50	0.00
MPP	000458646	GLASS	SIGHT	0.00	EA	0.00	0.00
MPP	000458661	GASKET	PUMP HOUSING	0.00	EA	71.79	0.00
MPP	000458687	KEY	WORM WHEEL & FRICTION	0.00	EA	29.45	0.00
MPP	000458703	PIN	FRAME PART	0.00	EA	0.00	0.00
MPP	000458729	SHAFT	DRIVE	0.00	EA	97.20	0.00
MPP	000458745	SHAFT	IDLER	0.00	EA	67.72	0.00
MPP	000458760	NUT	WORM WHEEL & FRICTION	0.00	EA	101.57	0.00
MPP	000458786	PINION	DRIVE SHAFT, 1725 RPM	0.00	EA	453.49	0.00
MPP	000458802	GASKET	PUMP	0.00	EA	4.12	0.00
MPP	000458828	SPINDLE	PIN BOWL	0.00	EA	8.96	0.00
MPP	000458844	COVER PLATE	BOWL SPINDLE	0.00	EA	11.68	0.00
MPP	000458869	GASKET	OIL FILTER	0.00	EA	3.40	0.00
MPP	000458885	SPRING	SMALL	0.00	EA	1.44	0.00
MPP	000458901	SPRING	LARGE, BRAKE	0.00	EA	2.22	0.00
MPP	000458927	ORING	SPEED INDICATOR	0.00	EA	0.10	0.00
MPP	000458943	SCREEN	STRAINER	0.00	EA	18.58	0.00

NOTE: SOH - Stock on Hand

Source: DARS 3342 Report (as of 5/31/07)

Maui Electric Company, Limited

MATERIALS PHYSICAL INVENTORY
MAALAEA POWER PLANT

WH	STOCK CODE	Item	Description	SOH	Unit	Price/ Unit	Total Cost/ Item
MPP	000458968	PARTS KIT	FOR CHROMALOX CONT	0.00	EA	56.00	0.00
MPP	000458984	BUSHING	DRIVE	0.00	EA	34.97	0.00
MPP	000459008	BEARING	BALL, UPPER	0.00	EA	22.52	0.00
MPP	000459024	GASKET	PIPE FLANGE	0.00	EA	0.00	0.00
MPP	000459040	FLEX	HOSE	2.00	EA	803.85	1,607.70
MPP	000459065	LUGS	SWING BOLT ASSEMBLY	0.00	EA	10.00	0.00
MPP	000459081	GASKET	COVER, 42"X58"SQ.	4.00	EA	30.80	123.19
MPP	000459107	ELEMENT ASSY	170F, AMOT	0.00	EA	126.32	0.00
MPP	000459123	ELEMENT ASSY	160F, AMOT	0.00	EA	129.04	0.00
MPP	000459149	WASHER	CENTRIFUGE	0.00	EA	8.60	0.00
MPP	000459164	ELEMENT	CHROMALOX HEATER, 480V, 3PH, 15KW	1.00	EA	2,250.17	2,250.17
MPP	000459180	THERMOSTAT	SUB-ASSY	0.00	EA	122.72	0.00
MPP	000459206	THERMOSTAT	COMPLETE	1.00	EA	262.55	262.55
MPP	000459222	CAPACITOR	ELECTRICAL	3.00	EA	13.47	40.41
MPP	000459248	THERMAL ASSY	ELECTRICAL	2.00	EA	75.25	150.50
MPP	000459263	SWITCH	FRONT	3.00	EA	105.52	316.56
MPP	000459289	SWITCH	BACK	1.00	EA	70.84	70.84
MPP	000459305	SWITCH	SYNCHRONIZE	2.00	EA	0.00	0.00
MPP	000459321	HANDLE	SWITCH	1.00	EA	0.00	0.00
MPP	000459347	EGA CONTROL	WOODWARD	0.00	EA	1,045.54	0.00
MPP	000459362	SHIM	(GEN) .016"	12.00	EA	0.00	0.00
MPP	000459388	SWITCH	TEMPERATURE	4.00	EA	333.38	1,333.52
MPP	000459404	SHIM	EXCITER	4.00	EA	0.00	0.00
MPP	000459420	SWITCH	WL-2	2.00	EA	499.62	999.23
MPP	000459446	SWITCH	FLOW, EXPLOSION	1.00	EA	0.00	0.00
MPP	000459461	SWITCH	THERMOSTAT	0.00	EA	311.75	0.00
MPP	000459487	LATCH	TRIP	1.00	EA	96.72	96.72
MPP	000459503	SWITCH	LIMIT	2.00	EA	112.28	224.56
MPP	000459529	TRANSFORMER	CONTROL	1.00	EA	76.57	76.57
MPP	000459545	VARISTOR	BRUSHLESS EX	2.00	EA	0.00	0.00
MPP	000459560	SWITCH	VIBRATION, MURPHY	3.00	EA	193.39	580.17
MPP	000459586	TRANSFORMER	CONTROL	1.00	EA	100.00	100.00
MPP	000459602	BOARD	AUTO CIRCUIT	1.00	EA	621.97	621.97
MPP	000459628	METER, FREQUENCY	TYPE AB-40 120VOLT 55-65 HZ	2.00	EA	735.28	1,470.56
MPP	000459644	RECTIFIER	POWER, BRUSHLESS EXCITER	3.00	EA	160.00	480.00
MPP	000459669	FACEPLATE	FREQUENCY METER	10.00	EA	31.01	310.14
MPP	000459685	DIODE	POWER, BRUSHLESS EXCITER	3.00	EA	160.00	480.00
MPP	000459701	POTENTIOMETER	AUTO VOLTAGE REGULATOR	0.00	EA	0.00	0.00
MPP	000459727	SCR	ELECTRICAL PART	2.00	EA	100.00	200.00
MPP	000459743	TRIMMER	CARBON	2.00	EA	0.00	0.00
MPP	000459768	DIODE	VOLTAGE REGULATOR	3.00	EA	3.02	9.06
MPP	000459784	TRIMMER	CARBON	1.00	EA	0.00	0.00
MPP	000459800	DIODE	VOLTAGE REGULATOR	1.00	EA	160.00	160.00
MPP	000459826	CONTROL	MAGNETROL LEVEL	1.00	EA	0.00	0.00
MPP	000459842	POTENTIOMETER	AUTO VOLTAGE REGULATOR	1.00	EA	0.00	0.00
MPP	000459867	MOP	VOLTAGE REGULATOR	1.00	EA	800.84	800.84
MPP	000459883	POTENTIOMETER	800P-VOLTAGE REGULATOR	1.00	EA	100.00	100.00
MPP	000459909	RELAY	TYPE M	2.00	EA	0.00	0.00
MPP	000459925	FUSE	POWER, TYPE EJ-1	4.00	EA	81.25	324.98
MPP	000459941	FINGER	PRIMARY CONTACT, STATIONARY	12.00	EA	65.85	790.20
MPP	000459966	FUSE	POWER, TYPE EJ-1	2.00	EA	88.29	176.58
MPP	000459982	HORN	VIBRATONE MODEL 450	3.00	EA	99.43	298.28
MPP	000460006	CONTACTS	MOVABLE PRIMARY	6.00	EA	79.04	474.24
MPP	000460022	CONTACTS	MOVABLE PRIMARY	6.00	EA	79.04	474.24
MPP	000460048	COIL	VIBRATONE MODEL 450	2.00	EA	18.72	37.44
MPP	000460063	CAPACITORS	HORN-MODEL 450	2.00	EA	5.20	10.40
MPP	000460089	DIAPHRAGM	HORN-MODEL 450	2.00	EA	9.36	18.72
MPP	000460105	POTENTIOMETER	ELECTRICAL	1.00	EA	48.69	48.69
MPP	000460121	TAP	ROTARY SW	1.00	EA	82.53	82.53
MPP	000460147	SCR	(SILICONE CONTROL RECTIFIER)	5.00	EA	12.70	63.50
MPP	000460162	RECTIFIER	FAULT CURRENT SUPPORT CIRCUIT BOARD	1.00	EA	80.68	80.68
MPP	000460188	RECTIFIER	ELECTRICAL	10.00	EA	82.18	821.80
MPP	000460204	TRANSFORMER	ELECTRICAL	1.00	EA	91.66	91.66
MPP	000460220	DIODE	ZENER, 4.7V	3.00	EA	3.90	11.70
MPP	000460246	SUS	VOLTAGE REGULATOR	1.00	EA	1.55	1.55
MPP	000460261	TRANSISTOR	NPN	4.00	EA	2.07	8.29
MPP	000460287	TRANSISTOR	NPN	5.00	EA	1.53	7.66

NOTE: SOH - Stock on Hand

Source: DARS 3342 Report (as of 5/31/07)

Maui Electric Company, Limited

MATERIALS PHYSICAL INVENTORY
MAALAEA POWER PLANT

WH	STOCK CODE	Item	Description	SOH	Unit	Price/ Unit	Total Cost/ Item
MPP	000460303	TRANSISTOR	PNP	5.00	EA	1.71	8.54
MPP	000460329	UJT	VOLT. REG, 739321	0.00	EA	2.93	0.00
MPP	000460345	TRANSISTOR	M.V.R. CIRCUIT BOARD	5.00	EA	1.87	9.37
MPP	000460360	TRANSISTOR	M.V.R. CIRCUIT BOARD	10.00	EA	4.44	44.37
MPP	000460386	TRANSISTOR	M.V.R. CIRCUIT BOARD	10.00	EA	2.95	29.48
MPP	000460402	POTENTIOMETER	ALLEN-BRADLEY	1.00	EA	28.56	28.56
MPP	000460428	SWITCH	(MICRO)	3.00	EA	4.93	14.79
MPP	000460444	MODULE	ANNUNCIATOR POINT	0.00	EA	1,145.64	0.00
MPP	000460469	MODULE	ANNUNCIATOR POINT	0.00	EA	175.89	0.00
MPP	000460485	CONVERTER	ENGINE PANEL	0.00	EA	0.00	0.00
MPP	000460501	POTENTIOMETERS	WOODWARD GOV. MOTOR	2.00	EA	71.95	143.90
MPP	000460527	HORN	TIMING RELAY	0.00	EA	0.00	0.00
MPP	000460543	RELAY	CONTROL PANEL (120 V DC)	4.00	EA	23.21	92.84
MPP	000460568	SWITCH	PRESSURE	4.00	EA	249.35	997.39
MPP	000460584	RELAY	CONTROL PANEL (240 V DC)	3.00	EA	25.20	75.60
MPP	000460600	TACHOMETER	SWITCHING "AIRPAX"	2.00	EA	854.68	1,709.36
MPP	000460626	SWITCH	SELECTOR, LEWIS	1.00	EA	1,863.68	1,863.68
MPP	000460642	SWITCH	SELECTOR, OMEGA	0.00	EA	178.65	0.00
MPP	000460667	SWITCH	SELECTOR, CONTROL PANEL	0.00	EA	431.08	0.00
MPP	000460683	RELAY	POTTER & BRUMFIELD	4.00	EA	56.14	224.56
MPP	000460709	COIL	SOLENOID VALVE, 120 VDC	2.00	EA	55.92	111.84
MPP	000460725	VAR METER - YOKOGAWA	CT RATIO 1200:5; PT RATIO 4200:120	3.00	EA	821.30	2,463.90
MPP	000460741	METER	TIME - AC	4.00	EA	111.72	446.89
MPP	000460766	VALVE	ASCO SOLENOID, 120ac	3.00	EA	111.78	335.34
MPP	000460782	RELAY	AGASTAT	1.00	EA	109.67	109.67
MPP	000460808	RELAY	TIMING, AGASTAT	3.00	EA	598.92	1,796.76
MPP	000460824	GAUGE	DIFFERENTIAL, DWYER	3.00	EA	69.35	208.05
MPP	000460840	TUBE	PHENOLIC	0.00	EA	7.09	0.00
MPP	000460865	BLOCKS	V (GLASS EPOXY)	0.00	EA	119.45	0.00
MPP	000460881	BLOCK	INSULATION (GLASS EPOXY)	0.00	EA	22.76	0.00
MPP	000460907	PIECES	POLE, GENERATOR	0.00	EA	5,151.56	0.00
MPP	000460923	BELT	"GATES"	8.00	EA	10.59	84.75
MPP	000460949	MOTOR	VENT FAN	1.00	EA	155.43	155.43
MPP	000460964	BALLAST	ENG. ROOM LIGHTS	1.00	EA	115.67	115.67
MPP	000460980	TRANSFORMER	CURRENT, JCS-O	6.00	EA	96.68	580.08
MPP	000461004	TRANSFORMER	POTENTIAL, JVM-3	3.00	EA	473.45	1,420.35
MPP	000461020	FUSE	CURRENT LIMITING, TYPE EJ-1	7.00	EA	66.71	466.96
MPP	000461046	TRANSFORMER	CURRENT	1.00	EA	4,605.45	4,605.45
MPP	000461061	TRANSFORMER	ISOLATION	1.00	EA	899.60	899.60
MPP	000461087	TRANSFORMER	SENSING	0.00	EA	1,839.07	0.00
MPP	000461103	INSULATOR	ELASTIC 5KV BUS	0.00	EA	30.99	0.00
MPP	000461129	KIT	TERMINATION, 3M	5.00	EA	70.07	350.35
MPP	000461145	CLIP ASSY	PRIMARY FUSE	4.00	EA	81.02	324.08
MPP	000461160	SWITCH	NORMALLY OPEN	0.00	EA	18.95	0.00
MPP	000461186	HEATER	STRIP 800W,240V.	6.00	EA	99.06	594.36
MPP	000461202	ATTACHMENT	PAD LOCK	0.00	EA	0.00	0.00
MPP	000461228	FUSE	(TYPE EJ-1 LIMITING)	6.00	EA	48.60	291.60
MPP	000461244	FUSE	(TYPE EJ-1)	10.00	EA	77.08	770.78
MPP	000461269	MOTOR	(SYNCHRONOUS)TELEC	0.00	EA	38.38	0.00
MPP	000461285	PAWL	LATCHING	5.00	EA	137.67	688.35
MPP	000461301	PAWL	DRIVING	3.00	EA	152.90	458.70
MPP	000461327	PAWL	CRANK/DRIVING PAWL	1.00	EA	0.00	0.00
MPP	000461343	PAWL	LATCHING	5.00	EA	169.71	848.55
MPP	000461368	SPRING	GEN SWITCHGEAR & ACCESS	2.00	EA	0.00	0.00
MPP	000461384	SPRING	UPPER PROP	6.00	EA	56.86	341.15
MPP	000461400	SPRING	PAWL	1.00	EA	12.70	12.70
MPP	000461426	SWITCH	LIMIT, ALLEN BRADLEY	1.00	EA	153.12	153.12
MPP	000461442	RATCHET	GEN SWITCHGEAR & ACCESS	1.00	EA	1,292.93	1,292.93
MPP	000461467	ARM	LEVER 3/4" X 1-5/8"	1.00	EA	8.85	8.85
MPP	000461483	RELAY	GEN SWITCHGEAR	7.00	EA	307.67	2,153.68
MPP	000461509	COIL	POTENTIAL TRIP	2.00	EA	184.46	368.92
MPP	000461525	KIT	BUSHING	1.00	EA	304.01	304.01
MPP	000461541	BUSHING	BRASS (ML-13)	2.00	EA	0.00	0.00
MPP	000461566	SPRING	PROP (LOWER)	2.00	EA	0.00	0.00
MPP	000461582	CLUTCH	SLIDE	3.00	EA	173.24	519.72
MPP	000461608	CLUTCH	MOTOR	2.00	EA	69.93	139.86
MPP	000461624	CAP	LENS (CLEAR)	10.00	EA	2.04	20.40

NOTE: SOH - Stock on Hand

Source: DARS 3342 Report (as of 5/31/07)

Maui Electric Company, Limited

MATERIALS PHYSICAL INVENTORY
MAALAEA POWER PLANT

WH	STOCK CODE	Item	Description	SOH	Unit	Price/ Unit	Total Cost/ Item
MPP	000461640	CAP	LENS (RED)	10.00	EA	2.04	20.40
MPP	000461665	CAP	LENS (GREEN)	10.00	EA	2.04	20.40
MPP	000461681	BRUSH	GEN SWITCHGEAR & ACCESS.	5.00	EA	5.32	26.60
MPP	000461707	GEAR	MITER	1.00	EA	60.86	60.86
MPP	000461723	GEAR	MITER	1.00	EA	60.86	60.86
MPP	000461749	PIN	ROLL	7.00	EA	2.04	14.28
MPP	000461764	SHAFT	GEN SWITCHGEAR & ACCESS.	3.00	EA	158.38	475.13
MPP	000461780	SPROCKET	GEN SWITCHGEAR & ACCESS.	2.00	EA	70.02	140.04
MPP	000461806	BEARING	NEEDLE	10.00	EA	3.74	37.40
MPP	000461822	DIODES	ELECTRICAL PART	3.00	EA	0.00	0.00
MPP	000461848	PANEL	PRINTED	1.00	EA	0.00	0.00
MPP	000461863	SCR	THYRISTOR, GE	6.00	EA	77.57	465.42
MPP	000461889	BATTERY	ACCESSORIES	1.00	EA	701.70	701.70
MPP	000461905	TRANSFORMER	CONTROL	1.00	EA	123.44	123.44
MPP	000461921	MOTOR	J.W. PUMP	1.00	EA	1,660.16	1,660.16
MPP	000461947	BUSHING	DODGE, 1-5/8	2.00	EA	10.44	20.88
MPP	000461962	COUPLING SET	J.W. PUMP	1.00	EA	207.21	207.21
MPP	000461988	COUPLING	PIN	5.00	EA	19.43	97.15
MPP	000462002	MOTOR	BALDOR, 30 HP, 3PH, 1765RPM, 286T FRAME	1.00	EA	1,850.58	1,850.58
MPP	000462028	BEARING	BEARINGS	5.00	EA	29.91	149.57
MPP	000462044	SWITCH	TEMPERATURE	2.00	EA	340.47	680.94
MPP	000462069	SEAL	MECHANICAL	6.00	EA	116.66	699.95
MPP	000462085	ORING	7-3/4"OD X 7-1/4"ID X 1/4"THK	6.00	EA	2.47	14.82
MPP	000462101	BEARING	5307 W NARROW SERIES	1.00	EA	64.51	64.51
MPP	000462127	GASKET	ROUND	6.00	EA	2.88	17.28
MPP	000462143	SEAL	MECHANICAL, SHAFT 2.250"	3.00	EA	187.00	561.00
MPP	000462168	GASKET	ROUND	1.00	EA	14.40	14.40
MPP	000462184	GASKET	ROUND	4.00	EA	53.46	213.84
MPP	000462200	ORING	JKT WATER PUMP	11.00	EA	16.75	184.22
MPP	000462226	ORING	JKT WATER PUMP	4.00	EA	7.59	30.35
MPP	000462242	HOSE	FLEX METAL	1.00	EA	1,120.55	1,120.55
MPP	000462267	COUPLING SET	J.W. PUMP, 40HP	1.00	EA	229.84	229.84
MPP	000462283	ELEMENT	PARAFLEX, DODGE	1.00	EA	86.09	86.09
MPP	000462309	BUSHING	1-3/8" DODGE	1.00	EA	12.75	12.75
MPP	000462325	CASING	GASKET, J.W. PUMP	3.00	EA	6.44	19.31
MPP	000462341	SEAL	BEARING, 1.750 X 2.50 X .500	6.00	EA	38.13	228.78
MPP	000462366	CASING	GASKET	4.00	EA	6.31	25.26
MPP	000462382	CASING	GASKET	7.00	EA	13.47	94.27
MPP	000462408	BEARING	M7 ONLY	2.00	EA	0.00	0.00
MPP	000462424	GASKET	IMPELLER NUT	2.00	EA	3.18	6.36
MPP	000462440	GASKET	CASING-SLEEVE	5.00	EA	1.30	6.51
MPP	000462465	MOTOR, BALDOR EFFICIENT	FRAME 254T, 15 HP, TEFC, 460 VOLT,	1.00	EA	782.94	782.94
MPP	000462481	MOTOR	RADIATOR FAN, 324T, 30/7.5 HP, TEFC,	1.00	EA	2,485.93	2,485.93
MPP	000462507	SHEAVE	6" TAPER LOCK	3.00	EA	89.58	268.74
MPP	000462523	LOCK	TAPER LOCK #4-7 RAC	3.00	EA	20.02	60.06
MPP	000462549	SLEEVE	SURE FLEX	3.00	EA	19.81	59.43
MPP	000462564	FLANGE	SURE FLEX COUPLING	4.00	EA	9.91	39.64
MPP	000462580	BEARING	SKF	4.00	EA	14.51	58.03
MPP	000462606	BEARING	SKF	3.00	EA	54.50	163.51
MPP	000462622	BEARING	TIMKEN TAPER ROLLER	2.00	EA	31.77	63.54
MPP	000462648	BEARING	FLANGE	4.00	EA	291.22	1,164.87
MPP	000462663	BELT	V (SET)	4.00	EA	169.30	677.18
MPP	000462689	BELT	DAYCO	2.00	EA	95.99	191.98
MPP	000462705	PLUG	VALVE	7.00	EA	144.46	1,011.22
MPP	000462721	BELT	#3 COMP.	15.00	EA	12.54	188.10
MPP	000462747	ORIFICE	BRASS	5.00	EA	15.50	77.50
MPP	000462762	SPRING	STARTING AIR PIPING SCHEMATIC	2.00	EA	0.00	0.00
MPP	000462788	INTERCOOLER	AIR COMPRESSOR	1.00	EA	396.00	396.00
MPP	000462804	UNLOADER	HYDRAULIC	2.00	EA	0.00	0.00
MPP	000462820	VALVE	SAFETY, 1"-265 PSI CAPACITY 1065 SCFM	1.00	EA	160.20	160.20
MPP	000462846	VALVE	CHECK, 2"	3.00	EA	658.18	1,974.55
MPP	000462861	GLOBE VALVE 2"	150SWP-300W0G	3.00	EA	158.79	476.37
MPP	000462887	GASKET	HI PRESS INTAKE	0.00	EA	1.42	0.00
MPP	000462903	ORING,	AIR COMPRESSOR	29.00	EA	0.32	9.32
MPP	000462929	REPAIR KIT	UNLOADER	6.00	EA	26.34	158.03
MPP	000462945	PLATE	COVER, UNLOADER	1.00	EA	120.54	120.54
MPP	000462960	PLATFORM	VALVE, UNLOADER	2.00	EA	2.14	4.28

NOTE: SOH - Stock on Hand

Source: DARS 3342 Report (as of 5/31/07)

Maui Electric Company, Limited

MATERIALS PHYSICAL INVENTORY
MAALAEA POWER PLANT

WH	STOCK CODE	Item	Description	SOH	Unit	Price/ Unit	Total Cost/ Item
MPP	000462986	PLATE	COVER, UNLOADER	1.00	EA	51.56	51.56
MPP	000463000	PLATE	COVER, PLAIN VALVE	1.00	EA	53.57	53.57
MPP	000463026	VALVE ASSY	SUCTION	2.00	EA	179.97	359.94
MPP	000463042	VALVE ASSY	DISCHARGE	3.00	EA	202.33	607.00
MPP	000463067	POST	VALVE	3.00	EA	6.07	18.22
MPP	000463083	HEAD	(RECONDITION)	1.00	EA	0.00	0.00
MPP	000463109	ORING	AIR COMPRESSOR	3.00	EA	0.36	1.08
MPP	000463125	PISTON ASSY	LOW PRESS.	1.00	EA	0.00	0.00
MPP	000463141	ORING	AIR COMPRESSOR	4.00	EA	2.24	8.96
MPP	000463166	RING	QUAD	12.00	EA	0.73	8.76
MPP	000463182	ORING	AIR COMPRESSOR	6.00	EA	1.93	11.58
MPP	000463208	SCREW ASSY	OIL PRESS ADJ	2.00	EA	6.13	12.26
MPP	000463224	SPRING	VALVE KICKOFF PIN	4.00	EA	2.00	8.00
MPP	000463240	LOCK	NUT	6.00	EA	3.20	19.20
MPP	000463265	DIAPHRAGM	UNLOADER	8.00	EA	3.74	29.92
MPP	000463281	PIN	VALVE KICK OFF	6.00	EA	1.00	6.00
MPP	000463307	ORING	OIL PUMP ROTOR SHAFT	3.00	EA	4.55	13.65
MPP	000463323	VALVE ASSY	SCREW (HOLDDOWN)	2.00	EA	12.14	24.28
MPP	000463349	PLATE	AIR COMPRESSOR	2.00	EA	46.17	92.34
MPP	000463364	GASKET	UNLOADER BODY	18.00	EA	1.90	34.20
MPP	000463380	BODY	UNLOADER ASSY	2.00	EA	59.09	118.18
MPP	000463406	PLATFORM	UNLOADER	2.00	EA	0.94	1.88
MPP	000463422	ROD ASSY	CONNECTING	2.00	EA	128.27	256.54
MPP	000463448	CARRIER	(BEARING QUINCY)	1.00	EA	9.93	9.93
MPP	000463463	GASKET	CYL TO CRANKCASE	0.00	EA	6.36	0.00
MPP	000463489	GASKET	HIGH PRESS	6.00	EA	2.88	17.28
MPP	000463505	GASKET	#3 AIR COMPRESSOR	5.00	EA	91.52	457.60
MPP	000463521	GASKET	LOW PRESSURE	12.00	EA	3.24	38.88
MPP	000463547	VALVE ASSY	UNLOADER #3 COMPR	2.00	EA	197.57	395.14
MPP	000463562	VALVE ASSY	INTAKE #3 COMPR	2.00	EA	167.09	334.18
MPP	000463588	VALVE ASSY	DISCHARGE #3 COMPR	1.00	EA	171.29	171.29
MPP	000463604	PISTON ASSY	.020 O.S. HIGH PRESS	1.00	EA	226.20	226.20
MPP	000463620	SPRING	INTAKE OR DISCHR	3.00	EA	2.89	8.67
MPP	000463646	RING SET	.020 O.S. HIGH PRESS	2.00	EA	34.18	68.36
MPP	000463661	CONE	(MAIN BEARING)	1.00	EA	59.54	59.54
MPP	000463687	CLOSURE	#3 COMPR	1.00	EA	17.90	17.90
MPP	000463703	SCREW	#3 COMPR (1/2"N.C. X 5)	3.00	EA	8.70	26.10
MPP	000463729	SCREW	#3 COMPR (1/2" N.C. X 3/4")	6.00	EA	2.83	16.98
MPP	000463745	RING SET	STANDARD LP	0.00	EA	191.34	0.00
MPP	000463760	RING SET	STANDARD LP	4.00	EA	35.89	143.56
MPP	000463786	RING SET	L.P., SIDE SEALER	4.00	EA	128.52	514.08
MPP	000463802	CONE	OIL PUMP SIDE	1.00	EA	40.26	40.26
MPP	000463828	CUP	MAIN BEARING	1.00	EA	40.10	40.10
MPP	000463844	GASKET	#1 & 3, COMPR	12.00	EA	3.40	40.75
MPP	000463869	SCREW	LOCK, PISTON PIN	3.00	EA	1.73	5.19
MPP	000463885	DISC	VALVE (INT & DISCHR)	17.00	EA	7.14	121.38
MPP	000463901	GASKET	INT OR DISCHR	6.00	EA	0.99	5.94
MPP	000463927	INSERT	PR. OF STD	2.00	EA	0.00	0.00
MPP	000463943	VALVE	RELIEF, 2" x 2" KUNKLE	1.00	EA	250.38	250.38
MPP	000463968	BELT	#1 COMP.	6.00	EA	13.54	81.24
MPP	000463984	VALVE	SAFETY,LONERGAN 110 PSI 1" X 1-1/4"	2.00	EA	125.88	251.76
MPP	000464008	SENDER	ENG OIL PRESSURE	0.00	EA	22.25	0.00
MPP	000464024	LIGHT	RED	0.00	EA	24.86	0.00
MPP	000464040	SWITCH	ENG OIL PRESSURE	0.00	EA	13.95	0.00
MPP	000464065	LIGHT	GREEN	0.00	EA	21.31	0.00
MPP	000464081	ELEMENT	OIL FILTER, PRIMARY	2.00	EA	55.75	111.49
MPP	000464107	CONNECTOR	FEMALE, 1/4" X 1/4"	0.00	EA	2.40	0.00
MPP	000464123	ELEMENT	OIL FILTER	0.00	EA	14.76	0.00
MPP	000464149	SEAL	SHAFT	0.00	EA	48.65	0.00
MPP	000464164	GASKET	COMPRESSOR	0.00	EA	0.40	0.00
MPP	000464180	ELEMENT	OIL FILTER	0.00	EA	87.83	0.00
MPP	000464206	GASKET	COMPRESSOR	0.00	EA	2.10	0.00
MPP	000464222	SEPARATOR KIT	OIL	0.00	EA	53.70	0.00
MPP	000464248	SWITCH	PUSH BUTTON	0.00	EA	3.43	0.00
MPP	000464263	ELEMENT	AIR FILTER	0.00	EA	41.20	0.00
MPP	000464289	LIGHT	LIGHT-YELLOW	0.00	EA	21.43	0.00
MPP	000464305	ELEMENT	FILTER ASSY, OIL	0.00	EA	35.95	0.00

NOTE: SOH - Stock on Hand

Source: DARS 3342 Report (as of 5/31/07)

Maui Electric Company, Limited

MATERIALS PHYSICAL INVENTORY
MAALAEA POWER PLANT

WH	STOCK CODE	Item	Description	SOH	Unit	Price/ Unit	Total Cost/ Item
MPP	000464321	FILTER KIT	INLINE	0.00	EA	6.67	0.00
MPP	000464347	ELEMENT	AIR FILTER	0.00	EA	30.81	0.00
MPP	000464362	ELEMENT	FILTER ASSY, OIL	0.00	EA	33.80	0.00
MPP	000464388	ELEMENT	SEP	0.00	EA	163.50	0.00
MPP	000464404	RING	PISTON INLET VALVE	0.00	EA	3.20	0.00
MPP	000464420	ORING	PORTABLE JOY AIR COMPRESSOR	0.00	EA	1.00	0.00
MPP	000464446	ORING	PORTABLE JOY AIR COMPRESSOR	0.00	EA	0.60	0.00
MPP	000464461	ELEMENT	DIESEL FUEL FILTER	0.00	EA	5.81	0.00
MPP	000464487	FILTER	OIL	0.00	EA	4.18	0.00
MPP	000464503	PACKING	O-RING	0.00	EA	1.00	0.00
MPP	000464529	VALVE	3/4" RELIEF-25 PSI	3.00	EA	491.29	1,473.86
MPP	000464545	GASKET	SHELL	34.00	EA	1.21	41.16
MPP	000464560	SPACER	F.O / FLTR CNTN	22.00	EA	7.21	158.62
MPP	000464586	GASKET	VENT SCREW	19.00	EA	4.62	87.78
MPP	000464602	FILTER ASSY	F.O. DUPLEX	1.00	EA	1,483.15	1,483.15
MPP	000464628	SCREW	F.O. / FLTR CNTN	12.00	EA	5.87	70.44
MPP	000464644	ORING	3-WAY VALVE	24.00	EA	0.19	4.67
MPP	000464669	CONNECTOR	5/8 O.D. X 1/2 PT	6.00	EA	5.59	33.54
MPP	000464685	VALVE	THREE-WAY	0.00	EA	57.56	0.00
MPP	000464701	TUBING	COPPER, 5/8" O.D.	20.00	EA	10.59	211.80
MPP	000464727	ELBOW	TUBE, 1/4 O.D. X 1/8 PT	5.00	EA	4.95	24.77
MPP	000464743	HOSE	F.O. DRAIN PIPING	5.00	EA	16.32	81.60
MPP	000464768	CONNECTOR	1-1/2 O.D.X 1-1/2PT	4.00	EA	30.65	122.60
MPP	000464784	PARTS KIT	ASCO	2.00	EA	260.63	521.26
MPP	000464800	HOSE	FLEX METAL	1.00	EA	52.42	52.42
MPP	000464826	GAUGE	F.O. SCHEMATIC	2.00	EA	117.01	234.02
MPP	000464842	GASKET	F.O. SCHEMATIC	4.00	EA	50.02	200.09
MPP	000464867	MOTOR	BALDOR, F.O. TRANSFER	1.00	EA	343.95	343.95
MPP	000464883	CONNECTOR	HOSE	1.00	EA	17.29	17.29
MPP	000464909	WASHER	F.O. SCHEMATIC	7.00	EA	2.00	14.00
MPP	000464925	WASHER	FUEL PRESS. REG & LINKAGE, 3/8"	12.00	EA	3.18	38.16
MPP	000464941	WASHER	FUEL PRESS. REG & LINKAGE, 3/8"	12.00	EA	0.35	4.20
MPP	000464966	NUT	SELF-LOCK, 3/8 - 16	12.00	EA	0.55	6.60
MPP	000464982	BOLT	3/8-16 X 2-1/2	12.00	EA	0.40	4.80
MPP	000465005	PLUG	NUT, SPECIAL, 7/8-14	12.00	EA	40.35	484.20
MPP	000465021	ORING	FUEL PRESS. REG & LINKAGE,	19.00	EA	0.36	6.84
MPP	000465047	END	ROD, 3/8"	2.00	EA	13.29	26.58
MPP	000465062	PLUNGER	SWITCH, TURNING GEAR	4.00	EA	27.71	110.84
MPP	000465088	RING	RETAINING, TURNING GEAR	0.00	EA	0.47	0.00
MPP	000465104	VALVE	TURNING GEAR	5.00	EA	157.72	788.58
MPP	000465120	GASKET	TURNING GEAR	3.00	EA	61.15	183.45
MPP	000465146	GASKET	TURNING GEAR	6.00	EA	4.30	25.80
MPP	000465161	COIL	VERSA VALVE	3.00	EA	84.25	252.75
MPP	000465187	PIN	SLOTTED	2.00	EA	0.53	1.06
MPP	000465203	BUSHING	OIL PURIFIER	2.00	EA	820.65	1,641.30
MPP	000465229	PACKING	OIL PURIFIER	2.00	EA	0.72	1.44
MPP	000465245	LOCKWASHER	OIL PURIFIER	17.00	EA	1.35	22.95
MPP	000465260	SHAFT	WORM WHEEL	2.00	EA	797.87	1,595.74
MPP	000465286	WHEEL	WORM	1.00	EA	3,775.93	3,775.93
MPP	000465302	COIL	RESET, CENTRIFUGE	1.00	EA	0.00	0.00
MPP	000465328	SWITCH	VIBRA	2.00	EA	237.12	474.24
MPP	000465344	SPINDLE	BOWL	3.00	EA	2,864.22	8,592.65
MPP	000465369	PLUG	SUPPORT	1.00	EA	93.25	93.25
MPP	000465385	SLEEVE	SPACER	1.00	EA	88.55	88.55
MPP	000465401	PLUG	SCREW	6.00	EA	52.09	312.54
MPP	000465427	SLEEVE	PLUG BOTTOM	3.00	EA	142.40	427.21
MPP	000465443	SWITCH	VIBRA, MODEL 366	1.00	EA	414.20	414.20
MPP	000465468	ORING	CENTRIFUGE, BOWL	14.00	EA	3.78	52.88
MPP	000465484	ACTUATOR	PNEUMATIC	1.00	EA	379.14	379.14
MPP	000465500	CONTACT KIT	AUXILIARY	3.00	EA	16.80	50.40
MPP	000465526	VALVE	ASCO SOLENOID	3.00	EA	399.98	1,199.93
MPP	000465542	REBUILT KIT	#2 PURIFIER SOLENOID CHANGER	3.00	EA	74.55	223.65
MPP	000465567	SLEEVE	STOP	0.00	EA	323.25	0.00
MPP	000465583	ORING	CENTRIFUGE	11.00	EA	73.29	806.15
MPP	000465609	BUFFER	OIL PURIFIER	21.00	EA	96.36	2,023.48
MPP	000465625	PACKING	PACKING	17.00	EA	2.56	43.45
MPP	000465641	HOUSING	BALL BRG. HOUSING	2.00	EA	1,000.53	2,001.06

NOTE: SOH - Stock on Hand

Source: DARS 3342 Report (as of 5/31/07)

Maui Electric Company, Limited

MATERIALS PHYSICAL INVENTORY
MAALAEA POWER PLANT

WH	STOCK CODE	Item	Description	SOH	Unit	Price/ Unit	Total Cost/ Item
MPP	000465666	CASING	SPRING CASING	2.00	EA	1,936.92	3,873.83
MPP	000465682	METER	FLOW	3.00	EA	352.62	1,057.86
MPP	000465708	RECTANGULAR RING	DELAVAL CENTRIFUGE	7.00	EA	61.34	429.37
MPP	000465724	THERMOMETER	DELAVAL CENTRIFUGE	2.00	EA	47.24	94.48
MPP	000465740	RING	SEAL	8.00	EA	6.00	48.00
MPP	000465765	SCREW	CLUTCH, WORM WHEEL	66.00	EA	0.76	50.16
MPP	000465781	SHAFT	WORM WHEEL	1.00	EA	3,383.04	3,383.04
MPP	000465807	PAD	FRICTION	11.00	EA	63.58	699.33
MPP	000465823	WHEEL	WORM, 1700-1800 RPM	1.00	EA	3,775.99	3,775.99
MPP	000465849	WORM	WORM, 1700-1800 RPM 60 HZ	1.00	EA	2,190.24	2,190.24
MPP	000465864	ORING	DELAVAL CENTRIFUGE	8.00	EA	0.76	6.07
MPP	000465880	ORING	DELAVAL CENTRIFUGE	9.00	EA	0.69	6.19
MPP	000465906	SCREW	DELAVAL CENTRIFUGE	4.00	EA	1.12	4.48
MPP	000465922	TACHOMETER	GEAR WHEEL, DELAVAL CENTRIFUGE	2.00	EA	61.24	122.48
MPP	000465948	COUPLING	DELAVAL CENTRIFUGE	4.00	EA	8.63	34.53
MPP	000465963	PIN	DELAVAL CENTRIFUGE	4.00	EA	1.84	7.36
MPP	000465989	KEY	DELAVAL CENTRIFUGE	4.00	EA	5.88	23.52
MPP	000466003	ORING	DELAVAL CENTRIFUGE	16.00	EA	13.08	209.28
MPP	000466029	NUT	DELAVAL CENTRIFUGE	4.00	EA	0.60	2.40
MPP	000466045	PACKING	DELAVAL CENTRIFUGE	18.00	EA	2.77	49.77
MPP	000466060	ORING	DELAVAL CENTRIFUGE	20.00	EA	3.75	74.93
MPP	000466086	ORING	DELAVAL CENTRIFUGE	14.00	EA	39.97	559.63
MPP	000466102	RING	RECTANGULAR	5.00	EA	7.18	35.92
MPP	000466128	WASHER	GUIDE	3.00	EA	64.09	192.27
MPP	000466144	PIN	DELAVAL CENTRIFUGE	10.00	EA	0.74	7.38
MPP	000466169	BEARING	THRUST BALL	2.00	EA	85.99	171.98
MPP	000466185	SCREW	DELAVAL CENTRIFUGE	38.00	EA	1.93	73.42
MPP	000466201	WASHER	THRUST	3.00	EA	105.35	316.06
MPP	000466227	SCREW	DELAVAL CENTRIFUGE	14.00	EA	22.88	320.32
MPP	000466243	PACKING	DELAVAL CENTRIFUGE	14.00	EA	6.01	84.10
MPP	000466268	DRIVER	DELAVAL CENTRIFUGE	1.00	EA	102.76	102.76
MPP	000466284	PACKING	DELAVAL CENTRIFUGE	10.00	EA	1.11	11.10
MPP	000466300	PACKING	DELAVAL CENTRIFUGE	8.00	EA	12.98	103.83
MPP	000466326	PACKING	DELAVAL CENTRIFUGE	20.00	EA	1.61	32.16
MPP	000466342	ORING	DELAVAL CENTRIFUGE	9.00	EA	1.93	17.40
MPP	000466367	DISC	GLASS	5.00	EA	6.72	33.60
MPP	000466383	ORING	DELAVAL CENTRIFUGE	8.00	EA	9.00	72.03
MPP	000466409	PACKING	DELAVAL CENTRIFUGE	18.00	EA	1.36	24.48
MPP	000466425	ORING	DELAVAL CENTRIFUGE	11.00	EA	5.08	55.87
MPP	000466441	PACKING	DELAVAL CENTRIFUGE	8.00	EA	1.09	8.72
MPP	000466466	PACKING	DELAVAL CENTRIFUGE	5.00	EA	60.39	301.93
MPP	000466482	SEAL	LIP	5.00	EA	13.55	67.76
MPP	000466508	COUPLING SET	FLEXIBLE	1.00	EA	216.90	216.90
MPP	000466524	SPRING	DELAVAL CENTRIFUGE	18.00	EA	116.27	2,092.89
MPP	000466540	SLEEVE	DELAVAL CENTRIFUGE	1.00	EA	134.53	134.53
MPP	000466565	ORING	DELAVAL CENTRIFUGE	13.00	EA	5.00	64.99
MPP	000466581	RING	LEVEL (98MM)	2.00	EA	0.00	0.00
MPP	000466607	SEAL	3 WAY BYPASS	4.00	EA	4.06	16.24
MPP	000466623	SLEEVE	HALF	6.00	EA	46.28	277.69
MPP	000466649	SPRING	DELAVAL CENTRIFUGE	28.00	EA	4.86	136.18
MPP	000466664	NOZZLE	DELAVAL CENTRIFUGE	2.00	EA	0.00	0.00
MPP	000466680	TUBE	GLASS	5.00	EA	59.81	299.05
MPP	000466706	ORING	DELAVAL CENTRIFUGE	2.00	EA	1.38	2.76
MPP	000466722	ORING	DELAVAL CENTRIFUGE	12.00	EA	4.37	52.44
MPP	000466748	ORING	DELAVAL CENTRIFUGE	8.00	EA	15.99	127.93
MPP	000466763	RING	LIP SEAL	6.00	EA	15.85	95.10
MPP	000466789	HOUSING	DELAVAL CENTRIFUGE	1.00	EA	1,460.28	1,460.28
MPP	000466805	PIECE	SPACER, #1 PURIFIER	1.00	EA	58.36	58.36
MPP	000466821	PIECE	SPACER, #2 PURIFIER	1.00	EA	58.36	58.36
MPP	000466847	ORING	DELAVAL CENTRIFUGE	10.00	EA	22.81	228.10
MPP	000466862	O RING 35.8 ID x 4	DELAVAL CENTRIFUGE	54.00	EA	1.34	72.38
MPP	000466888	PACKING	DELAVAL CENTRIFUGE	21.00	EA	1.91	40.08
MPP	000466904	GASKET	DELAVAL CENTRIFUGE	10.00	EA	4.06	40.56
MPP	000466920	ORING	DELAVAL CENTRIFUGE	13.00	EA	1.70	22.15
MPP	000466946	ORING	DELAVAL CENTRIFUGE	20.00	EA	5.12	102.42
MPP	000466961	SCREW	DELAVAL CENTRIFUGE	18.00	EA	3.59	64.62
MPP	000466987	RING	SEAL	18.00	EA	6.66	119.88

NOTE: SOH - Stock on Hand

Source: DARS 3342 Report (as of 5/31/07)

Maui Electric Company, Limited

MATERIALS PHYSICAL INVENTORY
MAALAEA POWER PLANT

WH	STOCK CODE	Item	Description	SOH	Unit	Price/ Unit	Total Cost/ Item
MPP	000467001	SCREW	DELAVAL CENTRIFUGE	18.00	EA	1.11	19.98
MPP	000467027	ORING	DELAVAL CENTRIFUGE	17.00	EA	41.53	706.05
MPP	000467043	COVER	DELAVAL CENTRIFUGE	1.00	EA	1,312.18	1,312.18
MPP	000467068	ORING	DELAVAL CENTRIFUGE	7.00	EA	2.32	16.22
MPP	000467084	RING	DISTRIBUTING	1.00	EA	2,405.53	2,405.53
MPP	000467100	ORING	DELAVAL CENTRIFUGE	27.00	EA	39.65	1,070.49
MPP	000467126	DISC	PARING	1.00	EA	622.67	622.67
MPP	000467142	DISC	GRAVITY, 115 MM	2.00	EA	84.00	168.00
MPP	000467167	DISC	GRAVITY, 99.5 MM	2.00	EA	84.00	168.00
MPP	000467183	DISC	GRAVITY, 121 MM	1.00	EA	0.00	0.00
MPP	000467209	DISC	GRAVITY, 108 MM	2.00	EA	84.00	168.00
MPP	000467225	DISC	GRAVITY, 64 MM	2.00	EA	84.00	168.00
MPP	000467241	DISC	GRAVITY, 138 MM	2.00	EA	84.00	168.00
MPP	000467266	DISC	GRAVITY, 145 MM	2.00	EA	209.29	418.58
MPP	000467282	SCREW	DELAVAL CENTRIFUGE	13.00	EA	0.69	8.95
MPP	000467308	RING	SEAL	22.00	EA	129.71	2,853.65
MPP	000467324	SCREW	DELAVAL CENTRIFUGE	12.00	EA	0.99	11.85
MPP	000467340	SCREW	DELAVAL CENTRIFUGE	15.00	EA	0.90	13.50
MPP	000467365	ORING	DELAVAL CENTRIFUGE	13.00	EA	5.59	72.64
MPP	000467381	ORING	FOR #1 PURIFIER-DISTRIB.	19.00	EA	3.94	74.89
MPP	000467407	PLUG	VALVE	26.00	EA	13.82	359.36
MPP	000467423	TOOL	LIFTING	1.00	EA	39.30	39.30
MPP	000467449	ORING	DELAVAL CENTRIFUGE	22.00	EA	0.97	21.30
MPP	000467464	TOOL	PULLER	1.00	EA	94.90	94.90
MPP	000467480	PACKING	DELAVAL CENTRIFUGE	9.00	EA	22.26	200.31
MPP	000467506	DISC	GRAVITY, 103 MM	2.00	EA	84.00	168.00
MPP	000467522	DISC	GRAVITY, 95.5 MM	2.00	EA	84.00	168.00
MPP	000467548	DISC	GRAVITY, 130 MM	0.00	EA	84.00	0.00
MPP	000467563	SCREEN	STRAINER	2.00	EA	51.74	103.48
MPP	000467589	DISC	BOWL	6.00	EA	208.81	1,252.85
MPP	000467605	BOLT	BOLT (HINGED)	2.00	EA	49.14	98.28
MPP	000467621	ORING	DELAVAL CENTRIFUGE	20.00	EA	24.22	484.36
MPP	000467647	PACKING	DELAVAL CENTRIFUGE	12.00	EA	0.00	0.00
MPP	000467662	FILTER	CUNO	39.00	EA	15.80	616.32
MPP	000467688	FILTER	WATER	30.00	EA	5.12	153.65
MPP	000467704	CARTRIDGE	MICRO-KLEAN II FILTER	0.00	EA	4.56	0.00
MPP	000467720	ORING	CUNO FILTER	17.00	EA	22.30	379.03
MPP	000467746	RING	SEAT	6.00	EA	20.21	121.26
MPP	000467761	SEAL	END BODY	7.00	EA	13.53	94.71
MPP	000467787	SEAL	SIDE BODY	9.00	EA	12.34	111.06
MPP	000467803	BALL	316 T-PORT	2.00	EA	212.53	425.06
MPP	000467829	BEARING	BALL-SKF 6206K	3.00	EA	11.03	33.08
MPP	000467845	BEARING	BALL-SKF 6305K	6.00	EA	14.98	89.89
MPP	000467860	BEARING	BALL-SKF 6306K	4.00	EA	28.14	112.54
MPP	000467886	BEARING	BALL-SKF 6211K	1.00	EA	56.79	56.79
MPP	000467902	NUT	ROUND	1.00	EA	2.95	2.95
MPP	000467928	NUT	ROUND	2.00	EA	6.36	12.72
MPP	000467944	WASHER	LOCK	4.00	EA	0.95	3.80
MPP	000467969	WASHER	LOCK	3.00	EA	1.00	3.00
MPP	000467985	BEARING	BALL	2.00	EA	243.77	487.53
MPP	000468009	BEARING	BALL	4.00	EA	243.38	973.52
MPP	000468025	BEARING	BALL	4.00	EA	284.36	1,137.45
MPP	000468041	BEARING	BALL	3.00	EA	204.17	612.51
MPP	000468066	RING	HEIGHT ADJUSTMENT	0.00	EA	9.19	0.00
MPP	000468082	COVER	DISTRIBUTING	1.00	EA	3,039.47	3,039.47
MPP	000468108	RING	HEIGHT ADJUSTING 4MM	1.00	EA	15.65	15.65
MPP	000468124	RING	HEIGHT ADJUSTING 6mm	2.00	EA	15.65	31.30
MPP	000468140	RING	HEIGHT ADJUSTING OUTLET	0.00	EA	20.83	0.00
MPP	000468165	WHEEL	PUMP (DRIVEN)	1.00	EA	408.06	408.06
MPP	000468181	WHEEL	PUMP (DRIVEN)	1.00	EA	460.14	460.14
MPP	000468207	BUSHING	BEARING	6.00	EA	23.72	142.30
MPP	000468223	WHEEL	PUMP (DRIVEN)	1.00	EA	241.39	241.39
MPP	000468249	WHEEL	PUMP (DRIVEN)	1.00	EA	273.04	273.04
MPP	000468264	RING	HEIGHT ADJUSTING 2MM	1.00	EA	15.65	15.65
MPP	000468280	SPRING KIT	DELAVAL CENTRIFUGE	2.00	EA	243.28	486.56
MPP	000468306	REBUILD KIT	SERIES 39	2.00	EA	193.17	386.34
MPP	000468322	CUSHION	RUBBER	2.00	EA	98.86	197.72

NOTE: SOH - Stock on Hand

Source: DARS 3342 Report (as of 5/31/07)

Maui Electric Company, Limited

MATERIALS PHYSICAL INVENTORY
MAALAEA POWER PLANT

WH	STOCK CODE	Item	Description	SOH	Unit	Price/ Unit	Total Cost/ Item
MPP	000468348	REPAIR KIT	DELAVAL CENTRIFUGE	5.00	EA	38.90	194.50
MPP	000468363	REGULATOR	FILTER	0.00	EA	32.14	0.00
MPP	000468389	REPAIR KIT	DELAVAL CENTRIFUGE	3.00	EA	11.51	34.53
MPP	000468405	SOLENOID VALVE	S/N S6404, PIPE 1/4, ORIFICE 3/32,	1.00	EA	130.68	130.68
MPP	000468421	COILS	REPLACEMENT	1.00	EA	39.28	39.28
MPP	000468447	KIT	ASCO REBUILT	0.00	EA	28.15	0.00
MPP	000468462	REPAIR KIT	ASCO	3.00	EA	284.33	852.99
MPP	000468488	ACTUATOR REPAIR KIT	DELAVAL CENTRIFUGE	2.00	EA	114.07	228.14
MPP	000468504	TIMER	CYCLE-FLEX EAGLE	5.00	EA	283.93	1,419.67
MPP	000468520	GASKET	INLET WATER HEADER	38.00	EA	2.77	105.20
MPP	000468546	BOLT	INLET WATER HEADER	16.00	EA	0.62	9.92
MPP	000468561	GASKET	WATER DISCHARGE HEADER	83.00	EA	5.56	461.35
MPP	000468587	GASKET	WATER DISCHARGE HEADER	10.00	EA	2.00	20.00
MPP	000468603	COUPLING SET	WATER DISCHARGE HEADER	3.00	EA	58.25	174.75
MPP	000468629	GASKET	WATER DISCHARGE HEADER	4.00	EA	2.00	8.00
MPP	000468645	GASKET	WATER DISCHARGE HEADER	0.00	EA	5.31	0.00
MPP	000468660	GASKET	WATER DISCHARGE HEADER	24.00	EA	4.57	109.76
MPP	000468686	COUPLING SET	WATER IN/OUT CNTN.	2.00	EA	0.00	0.00
MPP	000468702	COUPLING SET	WATER IN/OUT CNTN.	4.00	EA	0.00	0.00
MPP	000468728	SEAL	GASKET, WATER IN/OUT CNTN	32.00	EA	29.03	928.92
MPP	000468744	VALVE	TRIP, BEARING TEMP. DET.	3.00	EA	234.50	703.50
MPP	000468769	ORING	VITON	20.00	EA	0.11	2.28
MPP	000468785	ROD	FUSE	11.00	EA	7.00	77.00
MPP	000468801	ORING	VITON,114"(2.90MM)ID x .070"(1.78MM)CS	26.00	EA	0.58	14.97
MPP	000468827	ROD	FUSE	12.00	EA	7.00	84.00
MPP	000468830	VALVE, TEMPERATURE, 4103D	FOR BEARING TEMPERATURE DETECTOR	10.00	EA	252.68	2,526.84
MPP	000468843	SWITCH	VIBRO-GUARD VALVE	3.00	EA	443.61	1,330.82
MPP	000468868	VALVE	3 WAY	2.00	EA	412.26	824.51
MPP	000468884	ORING	SAFETY	3.00	EA	0.00	0.00
MPP	000468900	VALVE	SHUTTLE	1.00	EA	47.16	47.16
MPP	000468926	ORING	SAFETY SHUT DOWN CONTROL	25.00	EA	0.24	5.95
MPP	000468942	GASKET	CYL HEAD BREATHER	8.00	EA	9.23	73.85
MPP	000468967	GASKET	CYL HEAD BREATHER	56.00	EA	7.16	401.00
MPP	000468983	CONNECTOR	CYL HEAD BREATHER	4.00	EA	25.76	103.04
MPP	000469007	GASKET	CRANKCASE BREATHER	8.00	EA	10.78	86.24
MPP	000469023	GASKET	CRANKCASE BREATHER	8.00	EA	16.69	133.52
MPP	000469049	FILTER	AIR	2.00	EA	78.54	157.08
MPP	000469064	GASKET	CRANKCASE BREATHER	10.00	EA	6.53	65.30
MPP	000469080	BOLT	5/8"-11X5"LONG	8.00	EA	2.69	21.52
MPP	000469106	COUPLING SET	NO-HUB COUPLING-4"	4.00	EA	6.89	27.56
MPP	000469122	COUPLING	4" FLEX SEAL	5.00	EA	10.79	53.95
MPP	000469148	TACHOMETER	MAGNETIC	3.00	EA	64.05	192.15
MPP	000469163	CONNECTOR	WIRE	4.00	EA	47.15	188.60
MPP	000469189	SEAL	O-RING	14.00	EA	0.95	13.30
MPP	000469205	SCREW	FLAT HD.	30.00	EA	0.00	0.00
MPP	000469221	CROSS	RAILINGS	8.00	EA	50.91	407.26
MPP	000469247	ELBOW	RAILINGS	12.00	EA	41.38	496.58
MPP	000469262	TEE	RAILINGS	3.00	EA	18.99	56.97
MPP	000469288	VALVE	3 WAY DIAPHRAGM	5.00	EA	292.00	1,460.00
MPP	000469304	ORING	AIR DIST. LINE	22.00	EA	3.13	68.86
MPP	000469320	DIAPHRAGM	AIR DIST. LINE	1.00	EA	86.26	86.26
MPP	000469346	THERMOCOUPLE	PYRO-WIRE HEADER	12.00	EA	146.28	1,755.35
MPP	000469361	WIRE	THERMOCOUPLE	2.00	RL	614.12	1,228.24
MPP	000469387	THERMOCOUPLE	PYRO-WIRE HEADER	20.00	EA	69.01	1,380.30
MPP	000469403	WIRE	THERMOCOUPLE	1,000.00	FT	0.89	889.20
MPP	000469429	GASKET	C'CASE EXPLOSION DOOR	18.00	EA	21.37	384.57
MPP	000469445	GASKET	C'CASE EXPLOSION DOOR	48.00	EA	4.76	228.48
MPP	000469460	ORING	266EV	74.00	EA	30.10	2,227.76
MPP	000469486	PLATE	VALVE	8.00	EA	25.40	203.20
MPP	000469502	SEAT	C'CASE EXPLOSION DOOR	3.00	EA	0.00	0.00
MPP	000469528	BOLT	GUIDE	6.00	EA	8.98	53.88
MPP	000469544	CAP NUT	C'CASE EXPLOSION DOOR	12.00	EA	2.38	28.56
MPP	000469569	GASKET	C'CASE EXPLOSION DOOR	120.00	EA	4.62	554.40
MPP	000469585	GASKET	AIR INLET MANIFOLD	20.00	EA	1.04	20.80
MPP	000469601	BOLT	3/4"-10 X 1-1/2"	44.00	EA	0.00	0.00
MPP	000469627	CLAMP	TAKE-UP	20.00	EA	60.00	1,200.00
MPP	000469643	BELT,RUBBER	48" WIDTH REINFORCED NEOPRENE	6.00	FT	22.10	132.60

NOTE: SOH - Stock on Hand

Source: DARS 3342 Report (as of 5/31/07)

Maui Electric Company, Limited

MATERIALS PHYSICAL INVENTORY
MAALAEA POWER PLANT

WH	STOCK CODE	Item	Description	SOH	Unit	Price/ Unit	Total Cost/ Item
MPP	000469668	BELT	FLAT	2.00	EA	67.76	135.52
MPP	000469684	GASKET	INTERCOOLER/PIPING	33.00	EA	27.26	899.67
MPP	000469700	GASKET	INTERCOOLER/PIPING	4.00	EA	0.00	0.00
MPP	000469726	COUPLING SET	NO-THD 2"	0.00	EA	26.17	0.00
MPP	000469742	GASKET	INTERCOOLER/PIPING	2.00	EA	0.00	0.00
MPP	000469767	RING	LANTERN	3.00	EA	24.92	74.76
MPP	000469783	GASKET	CHANNEL	4.00	EA	17.67	70.68
MPP	000469809	GASKET	INTERCOOLER/PIPING	2.00	EA	16.12	32.24
MPP	000469825	RING	RETAINING	0.00	EA	109.15	0.00
MPP	000469841	STUD, FITTED	FLYWHEEL	15.00	EA	888.58	13,328.75
MPP	000469866	SHEAVES	GATES "QD"	1.00	EA	766.10	766.10
MPP	000469882	HOSE ASSY	S/S BRAIDED, 8" X 24"	2.00	EA	1,123.20	2,246.40
MPP	000469908	MOTOR	1/2 HP C' CASE	1.00	EA	137.18	137.18
MPP	000469924	RETAINER	(2 PER CAGE)	0.00	EA	0.20	0.00
MPP	000469940	DISC	(1 PER CAGE)	0.00	EA	0.30	0.00
MPP	000469965	STRAINER	AIR INT./EXH. SCHEM.	0.00	EA	10.00	0.00
MPP	000469981	SEAL	NAT'L 1 X 1.499 X .250	4.00	EA	1.63	6.52
MPP	000470005	SEAL	NAT'L -1.5 X 2.502 X .31	6.00	EA	4.17	25.00
MPP	000470021	JOINT	EXPANSION	1.00	EA	0.00	0.00
MPP	000470047	RETAINER	PLUG	43.00	EA	72.66	3,124.42
MPP	000470062	ORING	VALVE-FUEL INJ.	29.00	EA	0.77	22.19
MPP	000470088	SPACER	VALVE-FUEL INJ.	10.00	EA	427.48	4,274.77
MPP	000470104	SPRING	VALVE-FUEL INJ.	21.00	EA	263.56	5,534.77
MPP	000470120	RING	PACKING	180.00	EA	16.80	3,023.24
MPP	000470146	SPACER	VALVE-FUEL INJ.	64.00	EA	105.31	6,739.88
MPP	000470161	BLOCK	SPACER	9.00	EA	115.53	1,039.73
MPP	000470187	BLOCK	VALVE-FUEL INJ.	18.00	EA	214.34	3,858.14
MPP	000470203	PLATE	VALVE-FUEL INJ.	36.00	EA	169.58	6,104.95
MPP	000470229	PLATE	VALVE-FUEL INJ.	33.00	EA	51.23	1,690.59
MPP	000470245	BODY	VALVE-FUEL INJ.	8.00	EA	706.50	5,651.97
MPP	000470260	SPACER	VALVE-FUEL INJ.	25.00	EA	265.38	6,634.42
MPP	000470286	GASKET	VALVE-FUEL INJ.	30.00	EA	1.55	46.57
MPP	000470302	GASKET	VALVE-FUEL INJ.	41.00	EA	2.11	86.51
MPP	000470328	PLUG	VALVE-FUEL INJ.	19.00	EA	36.73	697.96
MPP	000470344	BALL	VALVE-FUEL INJ.	29.00	EA	1.59	46.22
MPP	000470369	SPRING	VALVE-FUEL INJ.	29.00	EA	64.03	1,856.74
MPP	000470385	GASKET	VALVE-FUEL INJ.	17.00	EA	2.69	45.68
MPP	000470401	RETAINER	VALVE-FUEL INJ.	17.00	EA	208.11	3,537.86
MPP	000470427	ADAPTER	VALVE-FUEL INJ.	23.00	EA	49.42	1,136.69
MPP	000470443	SEAT	VALVE, INNER	4.00	EA	46.96	187.84
MPP	000470468	GASKET	FLAT RD	10.00	EA	3.66	36.61
MPP	000470484	RING	RETAINING	4.00	EA	0.72	2.88
MPP	000470500	ORING	SEAL	11.00	EA	0.36	3.91
MPP	000470526	ROLLER	CROSSHEAD-VALVE	9.00	EA	169.05	1,521.45
MPP	000470542	BUSHING	CROSSHEAD-VALVE	8.00	EA	26.63	213.04
MPP	000470567	COLLAR	CROSSHEAD-VALVE	8.00	EA	19.14	153.12
MPP	000470583	PIN	CROSSHEAD-VALVE	8.00	EA	9.98	79.84
MPP	000470609	ORING	CYLINDER - AIR	20.00	EA	0.51	10.14
MPP	000470625	GASKET	CYLINDER - AIR	5.00	EA	1.45	7.25
MPP	000470641	SPRING	CYLINDER - AIR	2.00	EA	69.60	139.20
MPP	000470666	SPACER	SLEEVE	4.00	EA	51.20	204.80
MPP	000470682	BODY	REGULATOR-PRESSURE	0.00	EA	3,080.07	0.00
MPP	000470708	SEAT	REGULATOR-PRESSURE	5.00	EA	519.17	2,595.84
MPP	000470724	ADAPTER	REGULATOR-PRESSURE	1.00	EA	768.77	768.77
MPP	000470740	SCREW	SOCKET HD	24.00	EA	0.69	16.54
MPP	000470752	KIT, REPAIR, FOR TYPE 164 REGULATOR	CONSISTING OF:	6.00	KT	27.25	163.50
MPP	000470765	PISTON	REGULATOR-PRESSURE	11.00	EA	463.47	5,098.13
MPP	000470781	POST	REGULATOR-PRESSURE	2.00	EA	178.29	356.58
MPP	000470807	ORING	REGULATOR-PRESSURE	7.00	EA	1.97	13.76
MPP	000470823	GASKET	REGULATOR-PRESSURE	17.00	EA	7.01	119.20
MPP	000470849	GUIDE	REGULATOR-PRESSURE	8.00	EA	433.68	3,469.43
MPP	000470864	VALVE	NEEDLE	5.00	EA	1,508.92	7,544.59
MPP	000470880	SPRING	REGULATOR-PRESSURE	5.00	EA	171.81	859.04
MPP	000470906	PIN	SPIROL 3/8	1.00	EA	0.46	0.46
MPP	000470922	NUT	8834	1.00	EA	0.34	0.34
MPP	000470948	SCREW	REGULATOR-PRESSURE	1.00	EA	0.00	0.00
MPP	000470963	SCREW	1/4-20 X 1/2	1.00	EA	0.71	0.71

NOTE: SOH - Stock on Hand

Source: DARS 3342 Report (as of 5/31/07)

Maui Electric Company, Limited

MATERIALS PHYSICAL INVENTORY
MAALAEA POWER PLANT

WH	STOCK CODE	Item	Description	SOH	Unit	Price/ Unit	Total Cost/ Item
MPP	000470989	RING	RETAINING	5.00	EA	0.81	4.06
MPP	000471003	RING	REGULATOR-PRESSURE	2.00	EA	0.69	1.37
MPP	000471029	RING	REGULATOR-PRESSURE	2.00	EA	1.06	2.12
MPP	000471045	BEARING	REGULATOR-PRESSURE	2.00	EA	106.78	213.55
MPP	000471060	SHAFT	REGULATOR-PRESSURE	2.00	EA	5,587.58	11,175.15
MPP	000471086	SCREW	REGULATOR-PRESSURE	15.00	EA	2.02	30.30
MPP	000471102	PIN	TAPER	20.00	EA	0.62	12.31
MPP	000471128	BUSHING	REGULATOR-PRESSURE	6.00	EA	51.83	310.95
MPP	000471144	BUSHING	REGULATOR-PRESSURE	7.00	EA	107.88	755.17
MPP	000471169	POST	REGULATOR-PRESSURE	1.00	EA	105.29	105.29
MPP	000471185	LEVER	REGULATOR-PRESSURE	1.00	EA	57.60	57.60
MPP	000471201	GASKET	PUMP NOZZLE TEST	20.00	EA	0.00	0.00
MPP	000471227	GUIDE	PUMP NOZZLE TEST	2.00	EA	0.00	0.00
MPP	000471243	VALVE	PUMP NOZZLE TEST	1.00	EA	0.00	0.00
MPP	000471268	VALVE	SEAT	2.00	EA	0.00	0.00
MPP	000471284	COVER	ROUND	1.00	EA	84.91	84.91
MPP	000471300	COVER	ROUND	1.00	EA	69.35	69.35
MPP	000471326	CAP	FUEL CUT-OFF CYLINDER	1.00	EA	111.66	111.66
MPP	000471342	BOLT	FUEL CUT-OFF CYLINDER	1.00	EA	55.06	55.06
MPP	000471367	EXTENSION	FUEL CUT-OFF CYLINDER	3.00	EA	265.37	796.11
MPP	000471383	BODY	FUEL CUT-OFF CYLINDER	1.00	EA	1,263.24	1,263.24
MPP	000471409	ORING	FUEL CUT-OFF CYLINDER	10.00	EA	2.67	26.70
MPP	000471425	PISTON	FUEL CUT-OFF CYLINDER	1.00	EA	84.02	84.02
MPP	000471441	SPRING	FUEL CUT-OFF CYLINDER	1.00	EA	44.93	44.93
MPP	000471466	GASKET	FUEL CUT-OFF CYLINDER	10.00	EA	1.36	13.61
MPP	000471482	SETSCREW	FUEL CUT-OFF CYLINDER	23.00	EA	0.10	2.39
MPP	000471508	GASKET	FUEL CUT-OFF CYLINDER	1.00	EA	5.92	5.92
MPP	000471524	CAPSCREW	FUEL CUT-OFF CYLINDER	9.00	EA	0.42	3.78
MPP	000471540	END	YOKE	1.00	EA	113.37	113.37
MPP	000471565	PLUNGER	SPRING	1.00	EA	0.00	0.00
MPP	000471581	RETAINER	VALVE-GAS SHUTOFF	1.00	EA	0.00	0.00
MPP	000471607	CYLINDER	SPRING RETAIN	1.00	EA	0.00	0.00
MPP	000471623	SPRING	VALVE-GAS SHUTOFF	1.00	EA	10.00	10.00
MPP	000471649	ROD	PUSH	1.00	EA	0.00	0.00
MPP	000471664	FERRULE	ERMETO	1.00	EA	1.00	1.00
MPP	000471680	GASKET	VALVE-GAS SHUTOFF	1.00	EA	0.28	0.28
MPP	000471706	GASKET	VALVE-GAS SHUTOFF	3.00	EA	0.46	1.38
MPP	000471722	GASKET	VALVE-GAS SHUTOFF	2.00	EA	0.23	0.46
MPP	000471748	VALVE	NEEDLE	1.00	EA	5.00	5.00
MPP	000471763	SPRING	VALVE-GAS SHUTOFF	1.00	EA	2.00	2.00
MPP	000471789	SPRING	VALVE-GAS SHUTOFF	2.00	EA	5.42	10.84
MPP	000471805	BARREL & PLUNGER	VALVE-GAS SHUTOFF	1.00	EA	170.00	170.00
MPP	000471821	CYLINDER	AIR	2.00	EA	564.44	1,128.88
MPP	000471847	PINS	BUTTERFLY VALVE	18.00	EA	72.72	1,308.88
MPP	000471862	LEVER	BUTTERFLY VALVE	4.00	EA	663.18	2,652.70
MPP	000471888	SPACER	BUTTERFLY VALVE	2.00	EA	66.56	133.12
MPP	000471904	RETAINER	OIL SEAL	6.00	EA	46.62	279.72
MPP	000471920	SPACER	BUTTERFLY VALVE	4.00	EA	66.56	266.24
MPP	000471946	BEARING	BUTTERFLY VALVE	9.00	EA	28.01	252.06
MPP	000471961	SHAFT	BUTTERFLY VALVE	2.00	EA	1,081.75	2,163.50
MPP	000471987	GASKET	BUTTERFLY VALVE	14.00	EA	0.76	10.69
MPP	000472001	COVER	COVER	1.00	EA	29.98	29.98
MPP	000472027	LINK	BUTTERFLY VALVE	12.00	EA	40.61	487.27
MPP	000472043	SEAL	OIL	14.00	EA	11.98	167.77
MPP	000472068	ORING	BUTTERFLY VALVE	15.00	EA	1.47	22.05
MPP	000472084	LINER ASSY	OUTBOARD BEARING	1.00	EA	2,297.16	2,297.16
MPP	000472100	SEAL	DUST	3.00	EA	158.36	475.09
MPP	000472126	SLINGER	OIL	0.00	EA	0.00	0.00
MPP	000472142	GAUGE	OIL	2.00	EA	11.90	23.79
MPP	000472167	SPRING	DUST SEAL	1.00	EA	45.33	45.33
MPP	000472183	BELTING	ADAPTOR-INLET	7.00	EA	117.65	823.58
MPP	000472209	GASKET	ADAPTOR-EXHAUST	1.00	EA	53.13	53.13
MPP	000472225	GASKET	ADAPTOR-EXHAUST	4.00	EA	131.99	527.96
MPP	000472241	NUT	1-1/4"	21.00	EA	0.00	0.00
MPP	000472266	NUT	1"	24.00	EA	0.00	0.00
MPP	000472282	STUD	1-1/4"	11.00	EA	0.00	0.00
MPP	000472308	BOLT	ADAPTOR-EXHAUST	16.00	EA	11.89	190.24

NOTE: SOH - Stock on Hand

Source: DARS 3342 Report (as of 5/31/07)

Maui Electric Company, Limited

MATERIALS PHYSICAL INVENTORY
MAALAEA POWER PLANT

WH	STOCK CODE	Item	Description	SOH	Unit	Price/ Unit	Total Cost/ Item
MPP	000472324	NUT	ADAPTOR-EXHAUST	19.00	EA	5.28	100.32
MPP	000472340	GASKET	TIP, 10GPM	1.00	EA	62.40	62.40
MPP	000472365	GASKET	BOTTOM 10GPM	1.00	EA	62.40	62.40
MPP	000472381	VALVE	FLAPPER	0.00	EA	2.06	0.00
MPP	000472407	GASKET	CENTER, TANK	0.00	EA	130.38	0.00
MPP	000472423	CLOTH	COALESCER	0.00	EA	221.91	0.00
MPP	000472449	FILTER	BY-PASS	67.00	EA	48.28	3,235.03
MPP	000472464	ORING	TURBO FILTER PARTS	56.00	EA	5.89	329.62
MPP	000472480	PLUG	DISTRIBUTOR	1.00	EA	0.00	0.00
MPP	000472506	ORING	TURBO FILTER PARTS	30.00	EA	1.25	37.50
MPP	000472522	ORING	TURBO FILTER PARTS	22.00	EA	10.46	230.08
MPP	000472548	FILTER	FUEL OIL	38.00	EA	189.47	7,199.77
MPP	000472563	ELEMENT	FUEL OIL	56.00	EA	7.67	429.78
MPP	000472589	FILTER	TURBO OIL	61.00	EA	32.81	2,001.64
MPP	000472605	FILTER	(FULL FLOW)PECO REPL	228.00	EA	8.02	1,828.63
MPP	000472621	SHEAVE	DAYCO	2.00	EA	62.40	124.79
MPP	000472647	BUSHING	DAYCO, keyway 5/16"	2.00	EA	8.63	17.26
MPP	000472662	BELT	FAN, DAYCO	5.00	EA	57.81	289.04
MPP	000472688	MOTOR	10HP 215T FR 1745RPM TEFC	1.00	EA	541.68	541.68
MPP	000472704	BEARING	PILLOW BLOCK 2-3/16	4.00	EA	80.38	321.52
MPP	000472720	COVER	CYLINDER (COMPLETE)	0.00	EA	25,737.02	0.00
MPP	000472746	HELISERT	COVER	8.00	EA	0.00	0.00
MPP	000472761	PLUG	BELCH	16.00	EA	11.05	176.80
MPP	000472787	HELISERT	CYL COVER	74.00	EA	0.00	0.00
MPP	000472803	PLUG	BELCH	9.00	EA	12.37	111.33
MPP	000472829	HELISERT	CYL COVER	8.00	EA	0.00	0.00
MPP	000472845	PLUG	BELCH	7.00	EA	5.50	38.50
MPP	000472860	PACKING	CYL COVER	124.00	EA	1.05	130.20
MPP	000472886	CYLINDER COVER	INCL:(055-4-NP1) SCREW CONNECTION - 2EA	1.00	EA	20,948.81	20,948.81
MPP	000472902	PACKING	COVER	449.00	EA	2.12	951.88
MPP	000472928	NUT	STEEL BAR	36.00	EA	4.17	149.99
MPP	000472944	PACKING	CYLINDER COVER	128.00	EA	0.00	0.00
MPP	000472969	BOLT	STUD	108.00	EA	5.55	599.89
MPP	000472985	PLUG	SCREW	6.00	EA	0.00	0.00
MPP	000473009	PACKING	COVER	129.00	EA	8.59	1,108.11
MPP	000473025	GASKET	COPPER - AIR STRART CONN	141.00	EA	2.84	400.44
MPP	000473041	BUSHING	COVER	18.00	EA	132.00	2,375.91
MPP	000473066	BOLT	STUD	6.00	EA	20.16	120.96
MPP	000473082	BOLT	STUD	14.00	EA	50.42	705.88
MPP	000473108	BOLT	STUD	7.00	EA	47.51	332.57
MPP	000473124	NUT	COVER	11.00	EA	6.92	76.12
MPP	000473140	BOLT	STUD	5.00	EA	83.33	416.64
MPP	000473165	PIN	LOCATING M10 - M13	47.00	EA	21.44	1,007.76
MPP	000473181	BOLT	NUT	9.00	EA	15.08	135.72
MPP	000473207	BOLT	STUD	7.00	EA	33.52	234.62
MPP	000473223	NUT	COVER	5.00	EA	31.25	156.25
MPP	000473249	VALVE	INTAKE, COMPLETE M10	2.00	EA	854.65	1,709.30
MPP	000473264	VALVE	INTAKE, COMPLETE M12	45.00	EA	1,624.75	73,113.75
MPP	000473280	BUSH	UPPER - INTAKE	2.00	EA	60.54	121.08
MPP	000473306	SEAT	INTAKE VALVE - RIGHT SIDE	50.00	EA	332.20	16,610.05
MPP	000473322	SEAT	VALVE, D500495K	18.00	EA	265.20	4,773.60
MPP	000473348	BUSH	UPPER, O.S., 0.50MM	19.00	EA	103.82	1,972.58
MPP	000473363	ORING	INTAKE VALVE	99.00	EA	8.78	868.78
MPP	000473389	PINS	SLOTTED	98.00	EA	7.02	687.99
MPP	000473405	RING	SEALING (INTAKE VALVE)	0.00	EA	8.39	0.00
MPP	000473421	SLEEVE	DISTANCE	101.00	EA	6.74	680.74
MPP	000473447	SPRING	INNER (INTAKE VALVE)	10.00	EA	70.72	707.20
MPP	000473462	SEAT	VALVE, INTAKE - LT SIDE	30.00	EA	333.83	10,014.98
MPP	000473488	SPRING	OUTER	13.00	ST	87.08	1,132.04
MPP	000473504	CAGE	VALVE	18.00	EA	1,100.72	19,813.03
MPP	000473520	ROTO CAP	INTAKE VALVE - COMPLETE	79.00	EA	257.81	20,367.36
MPP	000473546	STEM	INTAKE VALVE	0.00	EA	1,450.46	0.00
MPP	000473561	BUSHING	LOWER	8.00	EA	155.37	1,242.96
MPP	000473587	STEM	INTAKE VALVE, M-10	0.00	ST	0.00	0.00
MPP	000473603	STEM	INTAKE VALVE, M-10 - M13	13.00	PC	874.31	11,366.09
MPP	000473629	COTTER	PIN	14.00	EA	49.92	698.88
MPP	000473645	SEAT	SPRING, LOWER	15.00	EA	34.94	524.16

NOTE: SOH - Stock on Hand

Source: DARS 3342 Report (as of 5/31/07)

Maui Electric Company, Limited

MATERIALS PHYSICAL INVENTORY
MAALAEA POWER PLANT

WH	STOCK CODE	Item	Description	SOH	Unit	Price/ Unit	Total Cost/ Item
MPP	000473660	RING	INNER	75.00	EA	6.95	521.25
MPP	000473686	BOLT	HEX SOCKET HEAD	33.00	EA	9.53	314.49
MPP	000473702	WIRE	LOCKING	400.00	FT	0.10	38.48
MPP	000473728	SPRING	BELLEVILLE	43.00	EA	25.65	1,102.95
MPP	000473744	COIL SPRING	(9 PCS/SET) Dwg: F11.11439-0011	539.00	PC	1.80	968.69
MPP	000473769	RING	SNAP	90.00	EA	2.28	205.20
MPP	000473785	RACE	BALL DWG: f11.11439-0011	36.00	EA	40.56	1,460.16
MPP	000473801	STEEL BALL	(9PCS/SET) DWG.F11.11439-0011	583.00	PC	1.14	663.22
MPP	000473827	ORING	M-12, M-13 D500495K	121.00	EA	2.26	273.44
MPP	000473843	BUSH	UPPER, MODIFIED M-12, M-13	36.00	EA	120.99	4,355.64
MPP	000473868	STEM	VALVE	38.00	EA	1,231.44	46,794.90
MPP	000473884	VALVES	EXHAUST (COMPLETE)	3.00	EA	3,345.58	10,036.74
MPP	000473900	STEM & CAGE	VALVE	0.00	ST	0.00	0.00
MPP	000473926	STEM & CAGE	VALVE	0.00	ST	2,778.76	0.00
MPP	000473942	BUSH	VALVE	0.00	EA	0.00	0.00
MPP	000473967	BUSH	VALVE	0.00	EA	48.70	0.00
MPP	000473983	SPRING	VALVE	92.00	EA	74.20	6,826.74
MPP	000474007	SPRING	VALVE	82.00	ST	87.94	7,211.33
MPP	000474023	ORING	VALVE	110.00	EA	11.46	1,260.93
MPP	000474049	ORING	VALVE SIZE: 6 X 180 (METRIC)	89.00	EA	11.48	1,021.77
MPP	000474064	BOLT	HEX SOCKET HEAD	21.00	EA	8.61	180.81
MPP	000474080	CAGE	VALVE - LEFT	2.00	EA	9,027.20	18,054.40
MPP	000474106	RING	SPRING - EXHAUST VALVE	58.00	EA	0.00	0.00
MPP	000474122	COVER	ROTO CAP	0.00	EA	50.22	0.00
MPP	000474148	BEARING & COVER	THRUST BALL	16.00	EA	17.42	278.65
MPP	000474163	CAGE	VALVE - RIGHT	2.00	EA	9,027.20	18,054.40
MPP	000474189	ORING	EXHAUST (COMPLETE)	310.00	EA	12.48	3,868.80
MPP	000474205	BEARING & COVERS	THRUST BALL	23.00	EA	54.95	1,263.94
MPP	000474221	COTTER	VALVE KEEPER	11.00	ST	26.88	295.68
MPP	000474247	SEAT	LOWER, SPRING	67.00	EA	61.58	4,125.88
MPP	000474262	CAP	ROTO	42.00	EA	306.71	12,881.62
MPP	000474288	SEAT	THRUST DWG: 505406K	45.00	EA	96.87	4,359.10
MPP	000474304	SEAT	SPRING	10.00	EA	104.00	1,040.00
MPP	000474320	PACKING	RUBBER - CYL. COVER J.W. CONN. 30mm	27.00	EA	5.03	135.89
MPP	000474346	VALVE	STARTING - COMPLETE	7.00	EA	623.42	4,363.94
MPP	000474361	RING	PISTON	117.00	EA	20.89	2,444.13
MPP	000474387	RING	PISTON	51.00	EA	26.00	1,326.00
MPP	000474403	ORING	STARTING VALVE	109.00	EA	4.08	444.86
MPP	000474429	BOLT	HEX SOCKET HEAD	5.00	EA	3.74	18.70
MPP	000474445	VALVE	NOZZLE - F.I.	0.00	EA	0.00	0.00
MPP	000474447	BODY, VALVE, FUEL INJECTION	DWG. #D501765K	0.00	EA	935.00	0.00
MPP	000474460	ROD	PUSH	20.00	EA	31.88	637.66
MPP	000474486	VALVE	FUEL INJECTION - COMPLETE M-12 & M-13	16.00	EA	4,855.23	77,683.68
MPP	000474502	VALVE	FUEL INJECTION - COMPLETE M-10 & M-11	12.00	EA	1,465.00	17,580.00
MPP	000474528	TIP, NOZZLE, 10 HOLE, DWG. D501218K,	(.076 X 10 X 77) COMPLETE	24.00	ST	1,147.58	27,541.86
MPP	000474530	TIP, NOZZLE, 11 HOLE, DWG. D501765K,	(.068 X 11 X 78-R B) COMPLETE	53.00	EA	1,178.77	62,474.57
MPP	000474544	NUT	FLANGE, M-12 & M-13	6.00	EA	59.73	358.40
MPP	000474569	SCREW	ADJUSTING M-12-13	3.00	EA	490.89	1,472.66
MPP	000474585	TIPS	FUEL NOZZLE, 12 HOLES, 0.72X12X78	13.00	EA	1,036.21	13,470.73
MPP	000474601	SCREW	ADJUSTING, M-10 & M-11	24.00	EA	313.34	7,520.20
MPP	000474627	PACKING	VALVE	258.00	EA	4.36	1,124.88
MPP	000474643	PIN	STRAIGHT	11.00	EA	11.36	124.99
MPP	000474668	O RING	FUEL INJECTION VALVE	687.00	EA	8.41	5,775.13
MPP	000474684	BODY, VALVE	D501218K M-10 & M-11	4.00	EA	1,230.00	4,920.00
MPP	000474700	ORING	FUEL INJECTION VALVE	507.00	EA	1.36	686.99
MPP	000474726	NUT	FLANGE, M-10 & M-11	4.00	EA	52.06	208.24
MPP	000474742	SPRING	FUEL INJECTION VALVE	1.00	EA	44.80	44.80
MPP	000474767	SEAT	SPRING, M10, M-11	44.00	EA	43.97	1,934.68
MPP	000474783	ORING	RUBBER, 63.09 X 3.53	28.00	EA	11.91	333.48
MPP	000474809	SPRING	SPRING, M-12, M-13	17.00	EA	10.60	180.26
MPP	000474825	ROD	PUSH, M-12, M-13	7.00	EA	39.52	276.64
MPP	000474841	SEAT	SPRING, M-12 & M-13	38.00	EA	37.84	1,437.92
MPP	000474866	NUT	NOZZLE	0.00	EA	0.00	0.00
MPP	000474882	BOLT	FLANGE	2.00	EA	57.81	115.62
MPP	000474908	PACKING	COPPER PLATE	20.00	EA	2.54	50.80
MPP	000474924	PACKING	COPPER	73.00	EA	2.65	193.45
MPP	000474940	ORING	CYLINDER SAFETY VALVE	75.00	EA	11.88	891.25

NOTE: SOH - Stock on Hand

Source: DARS 3342 Report (as of 5/31/07)

Maui Electric Company, Limited

MATERIALS PHYSICAL INVENTORY
MAALAEA POWER PLANT

WH	STOCK CODE	Item	Description	SOH	Unit	Price/ Unit	Total Cost/ Item
MPP	000474965	SEAT	CYLINDER SAFETY VALVE	0.00	ST	239.20	0.00
MPP	000474981	VALVE	CYLINDER SAFETY	4.00	ST	126.62	506.48
MPP	000475004	VALVE	CYLINDER SAFETY	0.00	EA	1,533.60	0.00
MPP	000475020	VALVE	INDICATOR - COMPLETE, M-12 & M-13	0.00	EA	906.34	0.00
MPP	000475046	VALVE	INDICATOR - ASSEMBLY	38.00	ST	166.26	6,317.95
MPP	000475061	PACKING	INDICATOR VALVE	31.00	EA	1.49	46.06
MPP	000475087	PACKING	INDICATOR VALVE	70.00	EA	0.46	31.91
MPP	000475103	BOLT & HEX NUT	BOLT AND HEX NUT	4.00	EA	0.00	0.00
MPP	000475129	PIPE	INDICATOR CONN. D500995K-1	66.00	EA	679.78	44,865.60
MPP	000475145	PACKING	COPPER PLATE	69.00	EA	3.12	215.39
MPP	000475160	PACKING	COPPER PLATE	37.00	EA	3.91	144.67
MPP	000475186	STEM	VALVE, BRONZE	4.00	EA	62.40	249.60
MPP	000475202	PLUG	SCREW	9.00	EA	62.40	561.60
MPP	000475228	HANDLE	LOCK	7.00	EA	72.80	509.60
MPP	000475244	NUT	HEX SOCKET HEAD	4.00	EA	2.08	8.32
MPP	000475269	WASHER	SPRING	9.00	EA	4.16	37.44
MPP	000475285	PACKING	COPPER	40.00	EA	3.08	123.20
MPP	000475301	VALVE	INDICATOR	4.00	EA	52.00	208.00
MPP	000475327	PIN	LOCK	9.00	EA	10.40	93.60
MPP	000475343	HANDLE	LOCK	5.00	EA	104.00	520.00
MPP	000475368	BONNET	CYLINDER COVER	0.00	EA	1,986.77	0.00
MPP	000475372	WASHER, CYLINDER COVER BONNET, DWG.#	500162K-3	73.00	EA	42.59	3,108.73
MPP	000475384	PACKING	CYLINDER COVER	34.00	EA	116.06	3,945.95
MPP	000475400	KNOB	COVER	15.00	EA	42.64	639.60
MPP	000475426	PACKING	RUBBER	57.00	EA	36.22	2,064.53
MPP	000475442	RING	SNAP	119.00	EA	0.40	47.31
MPP	000475467	PACKING	RUBBER (CORK)	34.00	EA	48.43	1,646.68
MPP	000475483	SCREW	HEAD, FLUSH	21.00	EA	3.13	65.64
MPP	000475509	WASHER	CYL COVER BONNET	20.00	EA	1.04	20.80
MPP	000475525	BOLT	STUD	6.00	EA	6.24	37.44
MPP	000475541	PINS	COLLAR	3.00	EA	14.56	43.68
MPP	000475566	ORING	STOCK	0.00	EA	0.81	0.00
MPP	000475582	BOLT	EYE	15.00	EA	48.88	733.20
MPP	000475608	KEY	FIXING	15.00	EA	32.61	489.15
MPP	000475624	SCREW	FLUSH HEAD	31.00	EA	5.21	161.51
MPP	000475640	BRACKET	CYL COVER BONNET	5.00	EA	75.51	377.53
MPP	000475665	PINS	COLLAR	15.00	EA	15.10	226.55
MPP	000475681	BOLT	STUD, M-12, M-13, D501118-21K-2	6.00	EA	449.53	2,697.20
MPP	000475707	NUT	FRAME, M-10, D501118-21K	6.00	EA	192.71	1,156.26
MPP	000475723	BOLT	MAIN BEARING	8.00	EA	390.62	3,124.96
MPP	000475749	WASHER	TONGUE	73.00	EA	1.54	112.78
MPP	000475764	DOWEL	INSULATING (OB BRG)	2.00	EA	0.00	0.00
MPP	000475780	PACKING	FRAME	0.00	EA	15.00	0.00
MPP	000475806	DOWEL	LOCATING (OB BRG)	2.00	EA	0.00	0.00
MPP	000475822	NUT	M-12 & M-13, D501118-21K-2	7.00	EA	130.00	910.00
MPP	000475848	CAP	LOCKING	4.00	EA	93.60	374.40
MPP	000475863	BOLT	COLLAR STUD	25.00	EA	22.80	569.88
MPP	000475889	PLATE	(FRAME 202)	3.00	EA	10.40	31.20
MPP	000475905	NUT	FLANGE D501118-21K-2	104.00	EA	8.38	871.46
MPP	000475921	BOLT	FLANGE	3.00	EA	4.49	13.47
MPP	000475947	LINER	CHOCK	22.00	EA	280.80	6,177.60
MPP	000475962	LINER	CHOCK	22.00	EA	301.60	6,635.20
MPP	000475988	BOLT	FOUNDATION	0.00	EA	619.83	0.00
MPP	000476002	NUT	FOUNDATION, M42, D433486	0.00	EA	194.89	0.00
MPP	000476028	WASHER	FOUNDATION, D433486	0.00	EA	167.91	0.00
MPP	000476044	WASHER	FOUNDATION, D433486	0.00	EA	179.48	0.00
MPP	000476069	PLATE	FOUNDATION, D433486	0.00	EA	187.32	0.00
MPP	000476085	LINER	CHOCK LINER, O.S.	0.00	EA	333.00	0.00
MPP	000476101	RING	THRUST, FORESIDE	7.00	PC	759.36	5,315.55
MPP	000476127	PIECE	LOCATING, B11.02100-0267K, M-12	6.00	EA	28.57	171.42
MPP	000476143	BEARING	NORMAL MAIN	14.00	PC	2,040.42	28,565.82
MPP	000476168	BOLT	HEX SOCKET HEAD, B11.02100-0267K, M-12	16.00	EA	1.08	17.28
MPP	000476184	BEARING	LOCATING	6.00	EA	2,060.55	12,363.27
MPP	000476200	RING	THRUST, AFT B11.02100-0267K	9.00	EA	683.97	6,155.74
MPP	000476226	SHIM	MAIN BEARING, 11.5 MM, O.S.	4.00	EA	2,759.25	11,037.00
MPP	000476242	SHIM	MAIN BEARING, 10MM	5.00	EA	213.68	1,068.40

NOTE: SOH - Stock on Hand

Source: DARS 3342 Report (as of 5/31/07)

Maui Electric Company, Limited

MATERIALS PHYSICAL INVENTORY
MAALAEA POWER PLANT

WH	STOCK CODE	Item	Description	SOH	Unit	Price/ Unit	Total Cost/ Item
MPP	000476267	SHIM	MAIN BEARING, 11MM	1.00	EA	470.39	470.39
MPP	000476283	HELISERT	20MM	34.00	EA	5.85	198.90
MPP	000476309	HELISERT	TAP & TOOL	0.00	EA	0.00	0.00
MPP	000476325	PACKING	CYL BLOCK, M-12, D501064K-66K	20.00	EA	10.42	208.40
MPP	000476341	PACKING	CYL BLOCK, M-10, D501064K	36.00	EA	10.42	375.12
MPP	000476366	PLUG	CYL BLOCK, M-12, D501064K-66K	26.00	EA	28.88	750.80
MPP	000476382	HELICOIL	M16 X 2.0	29.00	EA	3.07	89.09
MPP	000476408	INSERT	HELICAL	19.00	EA	3.37	64.05
MPP	000476424	NUT	FLANGE	0.00	EA	54.73	0.00
MPP	000476440	NUT	FLANGE	4.00	EA	117.94	471.76
MPP	000476465	LINER	CYLINDER, STEPPED	0.00	EA	15,489.87	0.00
MPP	000476481	LINER	CYLINDER, (COMPLETE)	20.00	EA	7,419.41	148,388.15
MPP	000476507	RING	SUPPORT, M-12, D501692K	3.00	EA	9,433.91	28,301.73
MPP	000476523	PACKING	COPPER, D501125K	40.00	EA	41.60	1,664.00
MPP	000476549	ORING	CYLINDER LINER D501125K	136.00	EA	57.24	7,784.54
MPP	000476564	RING	SEAL, O.S., 16.5 MM	54.00	EA	587.23	31,710.25
MPP	000476580	SEAL RING	STANDARD	25.00	EA	503.52	12,588.09
MPP	000476606	PACKING	CYLINDER LINER	109.00	EA	4.31	469.50
MPP	000476622	PIN	STRAIGHT, D501125K	10.00	EA	16.41	164.10
MPP	000476648	RING	SEALING - 18MM O.S.	8.00	EA	1,419.84	11,358.72
MPP	000476663	ORING	CYLINDER LINER, D501125K M-10	90.00	EA	45.54	4,098.47
MPP	000476689	ORING	CYLINDER LINER	123.00	EA	12.00	1,475.50
MPP	000476705	BOLT	HEX SOCKET HEAD, M12X1.75X30 M-10	46.00	EA	0.00	0.00
MPP	000476721	PACKING	CYLINDER LINER	204.00	EA	0.00	0.00
MPP	000476747	BOLT	HEX SOCKET HEAD, M12X1.75X70	53.00	EA	0.00	0.00
MPP	000476762	RING	SEAL (MAN B&W)	19.00	EA	834.04	15,846.68
MPP	000476788	PIN	LOCATING, CYL LINER, D501692K	25.00	EA	99.01	2,475.20
MPP	000476804	PACKING	CYLINDER, BLOCK	3.00	EA	312.24	936.71
MPP	000476820	BOLT	HEX, M-12, D501176.7K	6.00	EA	66.22	397.32
MPP	000476846	PACKING	PACKING, M-12, D501176.7K	2.00	EA	270.82	541.63
MPP	000476861	PIN	SCREW, TAPER M-12, D501176.7K	2.00	EA	13.88	27.76
MPP	000476887	PACKING	CRANKCASE, DOOR	33.00	EA	140.45	4,634.84
MPP	000476903	V SHEET PACKING	COVER (ANTI-COUPLING SIDE)	9.00	EA	32.25	290.24
MPP	000476929	RING	SEALING, HOERBIGER	38.00	EA	107.27	4,076.35
MPP	000476945	RING	NUT, WITH SNAP	38.00	EA	0.00	0.00
MPP	000476960	V SHEET PACKING	COVER (ANTI-COUPLING SIDE)	53.00	EA	38.01	2,014.77
MPP	000476986	PACKING	C CASE DOOR, M-12, D506624K-3	91.00	EA	136.51	12,422.66
MPP	000477000	ORING	C' CASE DOOR	71.00	EA	18.95	1,345.76
MPP	000477026	BOLT	REAMER, M-10 X 25	48.00	EA	0.00	0.00
MPP	000477042	PACKING	COPPER	98.00	EA	0.00	0.00
MPP	000477067	PACKING	COPPER, M-10	60.00	EA	1.62	97.20
MPP	000477083	BOLT	COLLAR, M12 X 140	1.00	EA	0.00	0.00
MPP	000477109	ORING	CRANKCASE, DOOR M-10 D500180K	20.00	EA	0.00	0.00
MPP	000477125	GASKET	EXPLOSION DOOR	16.00	EA	11.83	189.28
MPP	000477141	NUT	CROWN	42.00	EA	0.00	0.00
MPP	000477166	SEAT	CRANKCASE	2.00	EA	97.31	194.62
MPP	000477182	PLATE ASSY	VALVE	1.00	EA	21.20	21.20
MPP	000477208	RING	SEALING	41.00	EA	29.10	1,192.92
MPP	000477224	CRANKSHAFT	BALANCE WEIGHT	0.00	EA	202,090.12	0.00
MPP	000477240	BOLT	CRANKSHAFT & BALANCE WEIGHT	74.00	EA	532.25	39,386.50
MPP	000477265	PIN	SPLIT	20.00	EA	1.66	33.20
MPP	000477281	PIN	SPLIT	26.00	EA	1.66	43.16
MPP	000477307	SPRING	SLEEVE	117.00	ST	113.94	13,330.50
MPP	000477323	PIN	SPLIT - TORSIONAL VIB	36.00	EA	1.66	59.76
MPP	000477349	BOLT	STOP	18.00	EA	350.87	6,315.66
MPP	000477364	BOLT	STOP	18.00	EA	350.87	6,315.66
MPP	000477380	PLUG	PISTON PIN O.S., .2MM, D470073	42.00	EA	34.62	1,454.04
MPP	000477406	ORING	PISTON CROWN, D501695K	72.00	EA	71.92	5,178.15
MPP	000477422	WASHER	SPECIAL, D501695K	2.00	EA	49.92	99.84
MPP	000477448	PIN	LOCATING, M-12, D501695K	10.00	EA	11.87	118.71
MPP	000477463	BOLT	STUD - PISTON, D501695K	50.00	EA	525.20	26,260.00
MPP	000477489	NUT	PISTON, D501695K	6.00	EA	45.30	271.80
MPP	000477505	COVER	PISTON PIN, O.S. 220.5	48.00	EA	167.76	8,052.48
MPP	000477521	COVER (RETAINER)	PISTON PIN	18.00	EA	320.35	5,766.21
MPP	000477547	RETAINER	PISTON PIN, REGULAR 220.0	37.00	EA	179.01	6,623.37
MPP	000477562	ORING	PISTON, D501695K	85.00	EA	26.80	2,277.97
MPP	000477588	PLATE ASSY	COVER - PISTON	89.00	EA	91.62	8,154.18

NOTE: SOH - Stock on Hand

Source: DARS 3342 Report (as of 5/31/07)

Maui Electric Company, Limited

MATERIALS PHYSICAL INVENTORY
MAALAEA POWER PLANT

WH	STOCK CODE	Item	Description	SOH	Unit	Price/ Unit	Total Cost/ Item
MPP	000477604	CROWN	PISTON, M-12	3.00	EA	10,289.76	30,869.28
MPP	000477620	CROWN	PISTON	8.00	EA	10,408.11	83,264.92
MPP	000477646	BOLT	HEX, D501695K	48.00	EA	7.07	339.36
MPP	000477661	PISTON RING #2	GAS TIGHT - MODIFIED D501695K	55.00	EA	294.78	16,212.63
MPP	000477687	RING	OIL SCRAPER, D501695K	46.00	EA	555.23	25,540.48
MPP	000477703	RING	PISTON - #1, RIGHT TANG. CUT	0.00	EA	39.31	0.00
MPP	000477729	RING	PISTON - #2, LT TANG. CUT, M-12	0.00	EA	311.92	0.00
MPP	000477745	RING	OIL SCRAPER	0.00	EA	493.84	0.00
MPP	000477760	RING	PISTON - #3 MODIFIED	121.00	EA	118.55	14,344.19
MPP	000477786	RING	PISTON - #3 OLD TYPE	0.00	EA	236.08	0.00
MPP	000477802	RING	PISTON - #4 MODIFIED	75.00	EA	131.23	9,842.23
MPP	000477828	PISTON	COMPLETE - ONLY	0.00	EA	12,959.24	0.00
MPP	000477844	PISTON	COMPLETE - INCL COMPR.	0.00	EA	14,518.94	0.00
MPP	000477869	SKIRT	PISTON - MODIFIED	2.00	EA	15,375.79	30,751.57
MPP	000477885	PIN	PISTON, D501695K	2.00	EA	5,029.19	10,058.38
MPP	000477901	WASHER	D501695K - M10 - M13	56.00	EA	5.55	310.62
MPP	000477927	RING	PISTON, #1, M-12, M-13, PLASMA	15.00	EA	1,693.87	25,408.05
MPP	000477943	RING	PISTON, #4, M-12, M-13	0.00	EA	109.20	0.00
MPP	000477968	COMPRESSION RINGS, PLASMA	GAS TIGHT TOP - MODIFIED	125.00	EA	1,244.22	155,527.25
MPP	000477984	RING	PISTON, H=10	0.00	EA	301.39	0.00
MPP	000478008	RING	PISTON, H=10	0.00	EA	125.58	0.00
MPP	000478024	RING	PISTON, H=10	0.00	EA	125.58	0.00
MPP	000478040	RING	OIL SCRAPER WITH SPRING	0.00	EA	471.74	0.00
MPP	000478065	BEARING	PISTON PIN	18.00	EA	1,895.95	34,127.03
MPP	000478081	DETECTOR	AMOT CRANKPIN BEARING	0.00	EA	28,990.82	0.00
MPP	000478107	BEARING	SWING PIN	39.00	EA	2,003.61	78,140.79
MPP	000478123	COVER	BEARING, D501103K	0.00	EA	4,550.00	0.00
MPP	000478149	BEARING	CRANK PIN - UPPER	17.00	EA	1,346.42	22,889.07
MPP	000478164	BEARING	CRANK PIN - LOWER	17.00	ST	1,381.01	23,477.23
MPP	000478180	HOUSING	CRANKPIN BRG, D501103K-1	3.00	EA	45,986.64	137,959.92
MPP	000478206	BOLT	WAISTED, CRANKPIN, D501103K	8.00	EA	894.17	7,153.33
MPP	000478212	NUT, CRANKPIN, BEARING HOUSING	FOR CONNECTING ROD, DWG#501103K	49.00	EA	0.00	0.00
MPP	000478222	BOLT	WAISTED, SLAVE, D501103K	8.00	EA	941.79	7,534.30
MPP	000478248	BOLT	WAISTED, MASTER ROD SIDE	17.00	EA	844.02	14,348.30
MPP	000478263	ROD	CONN - MASTER	1.00	EA	4,800.00	4,800.00
MPP	000478289	ROD	CONN - SLAVE	2.00	EA	0.00	0.00
MPP	000478305	DETECTOR	TEMPERATURE WITH ROD, M-12	12.00	EA	188.19	2,258.27
MPP	000478321	ROD	FUSE ASSY, M-12	18.00	EA	56.44	1,015.87
MPP	000478347	BOLT	HEX BOLT	24.00	EA	1.56	37.44
MPP	000478360	DISC, PRESS, VALVE GEAR, DWG.#	B11.11100-0023K	13.00	EA	0.00	0.00
MPP	000478362	GEAR	VALVE (ROCKER ARM)	2.00	EA	0.00	0.00
MPP	000478388	END	OVERSIZED BALL	14.00	EA	180.49	2,526.86
MPP	000478404	BUSH	BEARING INTAKE	14.00	EA	86.57	1,212.01
MPP	000478420	BUSH	BEARING EXHAUST	13.00	EA	91.17	1,185.16
MPP	000478446	CUP	BALL - VALVE GEAR	23.00	EA	116.02	2,668.45
MPP	000478461	RING	SNAP - VALVE GEAR	79.00	EA	2.17	171.50
MPP	000478487	NUT	VALVE GEAR	6.00	EA	6.25	37.50
MPP	000478503	BOLT	THRUST	10.00	EA	221.73	2,217.28
MPP	000478529	SCREW	SET	13.00	EA	1.04	13.52
MPP	000478545	SHAFT (EXHAUST)	ROCKER ARM	4.00	EA	962.44	3,849.75
MPP	000478560	BOLT	CLAMP	10.00	EA	583.36	5,833.60
MPP	000478586	NUT	VALVE GEAR	8.00	EA	51.81	414.51
MPP	000478602	RING	CLAMP	132.00	EA	110.19	14,544.47
MPP	000478628	ARM	ROCKER, EXHAUST	1.00	EA	4,703.92	4,703.92
MPP	000478644	SHAFT (INTAKE)	ROCKER ARM	11.00	EA	1,196.10	13,157.14
MPP	000478669	NUT	VALVE GEAR	32.00	EA	15.42	493.44
MPP	000478672	PEDESTAL	VALVE GEAR	1.00	EA	1,203.05	1,203.05
MPP	000478675	ARM	ROCKER, INLET	3.00	EA	1,255.65	3,766.94
MPP	000478681	BOLT	STUD	4.00	EA	57.29	229.15
MPP	000478685	BOLT	TENSION	6.00	EA	90.03	540.18
MPP	000478701	SPRING PACK	CAM SHAFT DAMPER SLEEVE	29.00	ST	177.88	5,158.63
MPP	000478727	BOLT	TENSION	13.00	EA	208.78	2,714.14
MPP	000478743	BOLT	TENSION, D501067K-1, M-12	3.00	EA	580.37	1,741.11
MPP	000478768	WASHER	WASHER, D501067K-1, M-12	2.00	EA	237.54	475.08
MPP	000478784	O-RING	FUEL INJECTOR	123.00	EA	38.55	4,741.75
MPP	000478800	PISTON	VALVE	7.00	EA	81.10	567.67
MPP	000478826	RING	SEALING	21.00	EA	11.24	236.04

NOTE: SOH - Stock on Hand

Source: DARS 3342 Report (as of 5/31/07)

Maui Electric Company, Limited

MATERIALS PHYSICAL INVENTORY
MAALAEA POWER PLANT

WH	STOCK CODE	Item	Description	SOH	Unit	Price/ Unit	Total Cost/ Item
MPP	000478842	SPRING	VALVE	27.00	EA	9.85	265.95
MPP	000478867	ORING	VALVE	58.00	EA	6.31	366.00
MPP	000478883	BOLT	SET - AIR PILOT	6.00	EA	2.60	15.60
MPP	000478909	PACKING	STARTING AIR PILOT VALVE, D501295K	36.00	EA	3.85	138.60
MPP	000478925	CAM	EXHAUST	2.00	EA	2,205.32	4,410.63
MPP	000478941	CAM, FUEL (COMPLETE)	INCL: CAM, COVER, FIXING BOLTS	1.00	ST	2,360.80	2,360.80
MPP	000478966	PIECE	FIXED	6.00	EA	226.21	1,357.26
MPP	000478982	CAM	INTAKE	2.00	EA	2,307.64	4,615.28
MPP	000479006	PIN	CROSS	11.00	EA	14.87	163.57
MPP	000479022	PIN	JOINT	18.00	EA	19.13	344.34
MPP	000479048	CAM	FUEL	3.00	EA	1,283.72	3,851.17
MPP	000479063	BOLT	FLANGED	16.00	EA	41.54	664.62
MPP	000479089	WIRE	LOCKING	0.00	FT	0.77	0.00
MPP	000479105	CAM	SPLIT, INTAKE	2.00	EA	1,927.47	3,854.94
MPP	000479121	CAM	SPLIT, EXHAUST Dwg. D500282K	3.00	EA	2,105.77	6,317.30
MPP	000479144	SEAT, LOWER SPRING, M12-13 UNIT	FOR FUEL INJECTION PUMP, DWG.#D502304K-2	8.00	EA	141.66	1,133.26
MPP	000479145	PIECE, HOLDING, M12-13 UNIT	FOR FUEL INJECTION PUMP, DWG.#D502304K-2	1.00	EA	165.00	165.00
MPP	000479146	SLEEVE, CONTROL, M12-13 UNIT	FOR FUEL INJECTION PUMP, DWG.#D502304K-2	1.00	EA	401.98	401.98
MPP	000479147	RING	SNAP, INTERNAL, M-12, D502304K-2	44.00	EA	18.06	794.67
MPP	000479162	O RING	M-10, D501219K	60.00	EA	26.16	1,569.60
MPP	000479188	BOLT	HEX SOCKET HEAD, M-10, D501219K	5.00	EA	7.92	39.58
MPP	000479204	BOLT	HEX, M-12, D502304K-2	1.00	EA	26.04	26.04
MPP	000479220	ORING	M-12, D502304K-2	108.00	EA	7.74	835.92
MPP	0004~9246	BOLT	M-10, D501219K	2.00	EA	66.66	133.33
MPP	000479250	BOLT, HEX, SOCKET HEAD, DWG.#D501219K	M8 X 65 - METRIC	69.00	EA	1.19	82.14
MPP	000479261	PACKING, SINGLE PLUNGER TYPE,	SEAL RING	151.00	EA	1.66	250.42
MPP	000479287	PACKING	BUFFER SCREW, M-12, D502304K-2	98.00	EA	3.13	307.20
MPP	000479303	ORING	M-10, D501219K	57.00	EA	27.36	1,559.39
MPP	000479329	PIN	SCREW, TAPER, M-12, D502304K-2	10.00	EA	36.19	361.90
MPP	000479345	NUT	SELF LOCKING, M-12, D502304K-2	12.00	EA	3.74	44.88
MPP	000479360	NUT	HEX, M-12, D502304K-2	18.00	EA	2.08	37.44
MPP	000479386	PUMP, FUEL INJECTION COMPLETE	D501219K	2.00	EA	4,101.00	8,202.00
MPP	000479402	PUMP, FUEL INJECTION, COMPLETE	D502304K-2	1.00	EA	5,789.02	5,789.02
MPP	000479428	VALVE & VALVE SEAT	DELIVERY, M-10	5.00	ST	1,102.40	5,512.00
MPP	000479444	VALVE & VALVE SEAT	DELIVERY, M-12	0.00	EA	1,135.68	0.00
MPP	000479469	ORING	F.I. PUMP, M-10	39.00	EA	40.47	1,578.22
MPP	000479485	SPRING	F.I. PUMP, M-10	0.00	EA	0.00	0.00
MPP	000479501	BOLT	F.O. PUMP, M-10	2.00	EA	92.18	184.36
MPP	000479527	SPRING	F.I. PUMP, M-10	1.00	EA	127.92	127.92
MPP	000479543	SCREW	BUFFER (BAFFLE) D501219K	83.00	EA	66.65	5,532.02
MPP	000479568	RING, INTERNAL SNAP	D502304K-2	45.00	EA	3.12	140.62
MPP	000479584	ORING	F.I. PUMP D501219K & D502304K-2	54.00	EA	55.17	2,979.23
MPP	000479600	PLUNGER & SLEEVE	F.I. PUMP, NEW TYPE, 45MM	21.00	PC	2,574.86	54,072.03
MPP	000479626	PLUNGER & SLEEVE	F.I. PUMP, M-10, OLD TYPE	0.00	ST	30,312.48	0.00
MPP	000479642	PLATE	F.I. PUMP	9.00	EA	10.75	96.74
MPP	000479667	PACKING, F.I. PUMP	D502304K-2, standard size	472.00	EA	1.83	863.76
MPP	000479683	RING	BACK UP,TEFLON	97.00	EA	12.70	1,232.26
MPP	000479709	ORING	F.I. PUMP	23.00	EA	32.58	749.25
MPP	000479725	SPRING	F.I. PUMP, M-10	48.00	EA	10.65	511.20
MPP	000479741	WASHER	F.I. PUMP, M-10	16.00	EA	1.00	16.00
MPP	000479766	BALL	PILLOW, OUTER, M-12	6.00	EA	50.90	305.40
MPP	000479782	FLANGE	PUMP, M-10	5.00	EA	724.89	3,624.45
MPP	000479808	BALL	PILLOW, INNER, M-12	19.00	EA	50.90	967.10
MPP	000479824	RING	SNAP, M-10	90.00	EA	16.12	1,450.52
MPP	000479840	PIECE	FORKED, M-10, D501219K	44.00	EA	20.61	906.88
MPP	000479865	SPRING	VALVE, M-10, D501219K	42.00	EA	13.48	565.95
MPP	000479881	RING	SNAP, M-10, D501219K	47.00	EA	26.61	1,250.74
MPP	000479907	RING	SNAP, D501219K	20.00	EA	40.99	819.80
MPP	000479923	HELI-SERT	F.I. PUMP	41.00	EA	7.65	313.80
MPP	000479949	BEARING	CAMSHAFT	6.00	EA	1,587.04	9,522.24
MPP	000479964	BOLT	TENSION	16.00	EA	246.17	3,938.70
MPP	000479980	NUT	SQUARE HEAD	4.00	EA	20.62	82.48
MPP	000480004	COLLAR	DISTANCE	18.00	EA	12.35	222.30
MPP	000480020	U-NUT	CAMSHAFT BEARING, M-10	14.00	EA	14.69	205.66

NOTE: SOH - Stock on Hand

Source: DARS 3342 Report (as of 5/31/07)

Maui Electric Company, Limited

MATERIALS PHYSICAL INVENTORY
MAALAEA POWER PLANT

WH	STOCK CODE	Item	Description	SOH	Unit	Price/ Unit	Total Cost/ Item
MPP	000480046	ORING	CAMSHAFT BEARING	190.00	EA	1.04	197.60
MPP	000480061	PIN	SCREW HOLE	6.00	EA	18.77	112.62
MPP	000480087	BEARING	CAMSHAFT, O.S., 1MM	3.00	EA	2,279.04	6,837.12
MPP	000480103	BOLT	TIGHTENING WITH NUT & COLLAR RING	5.00	EA	319.82	1,599.10
MPP	000480129	BEARING	CAMSHAFT, MODIFIED	0.00	EA	8,449.28	0.00
MPP	000480145	PIPE	L.O. 700MM	5.00	EA	26.00	130.00
MPP	000480160	PIPE	L.O. 600MM	5.00	EA	20.80	104.00
MPP	000480186	PIPE	L.O. 500MM	5.00	EA	14.56	72.80
MPP	000480202	PIPE	L.O. 400MM	5.00	EA	14.56	72.80
MPP	000480228	JOINT	PIPE	7.00	EA	5.20	36.40
MPP	000480244	JOINT	PIPE	0.00	EA	4.33	0.00
MPP	000480269	JOINT	PIPE	0.00	EA	5.20	0.00
MPP	000480285	PIECE	JOINT	0.00	EA	89.44	0.00
MPP	000480301	PACKING	CAMSHAFT	0.00	EA	5.20	0.00
MPP	000480327	PACKING	CAMSHAFT	0.00	EA	3.12	0.00
MPP	000480343	TAP	CAMSHAFT	0.00	EA	89.44	0.00
MPP	000480368	TAP	CAMSHAFT	0.00	EA	161.20	0.00
MPP	000480384	PIN	TAPER, CAMSHAFT MODIFICATION	0.00	EA	113.78	0.00
MPP	000480400	NUT	CAMSHAFT MODIFICATION	0.00	EA	91.94	0.00
MPP	000480426	BUSHING	CAMSHAFT	2.00	EA	1,081.89	2,163.78
MPP	000480442	ORING	VALVE GEAR	222.00	EA	12.17	2,701.43
MPP	000480467	PACKING	VALVE GEAR	101.00	EA	3.89	393.25
MPP	000480483	ROLLER ASSY	VALVE	6.00	EA	793.18	4,759.07
MPP	000480509	ORING	VALVE GEAR	233.00	EA	7.41	1,726.39
MPP	000480525	COVER	OIL, C11.11200.0021K	20.00	EA	24.23	484.67
MPP	000480541	BEARING	SKF	3.00	EA	45.20	135.60
MPP	000480560	SPRING, F.I. PUMP ADJUSTING DEVICE, DWG.	#D501298.9K	4.00	EA	0.00	0.00
MPP	000480566	LEVER	F.I. PUMP ADJ. DEVICE, D502198K-1	1.00	EA	605.74	605.74
MPP	000480582	LEVER	ADJUSTING, D502198K-1	1.00	EA	1,916.16	1,916.16
MPP	000480608	BEARING	F.I. PUMP ADJ. DEVICE, D502198K-1	5.00	EA	58.51	292.57
MPP	000480624	BEARING	F.I. PUMP ADJ. DEVICE, D502198K-1	3.00	EA	32.77	98.31
MPP	000480640	BEARING	SPHERICAL PLAIN	9.00	EA	52.89	476.01
MPP	000480665	LEVER	ADJ DEVICE-ELEC. GOV, D501546K	1.00	EA	1,214.19	1,214.19
MPP	000480681	ASSY	DAMPER, D502198K-1 M10,11	1.00	EA	2,028.00	2,028.00
MPP	000480707	JOINT	FORKED, D501546K	2.00	EA	915.20	1,830.40
MPP	000480723	RING	SNAP, EXTERNAL, D501546K	54.00	EA	1.98	107.12
MPP	000480749	PIN	FLANGED, D501546K	2.00	EA	147.92	295.84
MPP	000480764	WASHER	ADJ DEVICE-ELEC. GOV, D501546K	2.00	EA	11.77	23.54
MPP	000480780	PIN	COLLAR, D501546K	6.00	EA	78.21	469.25
MPP	000480806	WASHER	ADJ DEVICE-ELEC. GOV, D501546K	2.00	EA	9.40	18.80
MPP	000480822	LEVER	ADJ DEVICE-ELEC. GOV, D501546K	3.00	EA	1,090.30	3,270.89
MPP	000480848	JOINT	FORKED, ADJ DEVICE, D501546K	7.00	EA	659.60	4,617.23
MPP	000480863	BALL	PILLOW, D501298.9K	22.00	EA	74.76	1,644.78
MPP	000480889	BALL	PILLOW, D501298.9K	8.00	EA	76.91	615.26
MPP	000480905	PIN	SHAFT, ELEC. GOV. D501546K	3.00	EA	65.34	196.01
MPP	000480921	BEARING	SPHERICAL, D501298.9K	14.00	EA	97.07	1,358.97
MPP	000480947	SEAT	BRG - SEAT (A) D501298.9K	4.00	EA	1,144.64	4,578.57
MPP	000480962	BALL	"L", D501298.9K	0.00	EA	69.79	0.00
MPP	000480988	NUT	FUEL INJ PUMP ADJ. D501298.9K	2.00	EA	5.17	10.34
MPP	000481002	BAR	ADJUSTING, D501298.9K	5.00	EA	149.91	749.53
MPP	000481028	NUT	FUEL INJ PUMP ADJ. D501298.9K	2.00	EA	6.24	12.48
MPP	000481044	COVER	W/THREAD, D501298.9K	2.00	EA	195.43	390.86
MPP	000481069	SPRING	F.I. PUMP ADJ, D501298.9K	4.00	EA	83.33	333.32
MPP	000481085	COVER	F.I. PUMP ADJ, D501298.9K	4.00	EA	167.86	671.44
MPP	000481101	BALL	PILLOW, D501298.9K	4.00	EA	56.39	225.56
MPP	000481127	PIN	FLANGED, D501298.9K	8.00	EA	38.84	310.72
MPP	000481143	WASHER	F.I. PUMP ADJ, D501298.9K	4.00	EA	3.63	14.52
MPP	000481168	PIN	SPLIT, D501298.9K	4.00	EA	2.60	10.40
MPP	000481184	BALL	PILLOW, RT HAND THREAD D501546K	8.00	EA	67.44	539.53
MPP	000481200	BALL	PILLOW, LH THREAD, D501546K	3.00	EA	78.00	234.00
MPP	000481226	LEVER	FUEL INJ. PUMP ADJ, D501298.9K	18.00	EA	120.98	2,177.64
MPP	000481242	JOINT	FORKED, D501298.9K	6.00	EA	399.36	2,396.16
MPP	000481267	BEARING	SPHERICAL, D501298.9K	9.00	EA	42.82	385.38
MPP	000481283	BALL	PILLOW, ADJ DEVICE, ELEC GOV D501546K	6.00	EA	81.38	488.28
MPP	000481309	SCREW	CONNECTING	2.00	EA	110.93	221.86
MPP	000481325	PIN	STRAIGHT, D501298.9K	4.00	EA	33.28	133.12

NOTE: SOH - Stock on Hand

Source: DARS 3342 Report (as of 5/31/07)

Maui Electric Company, Limited

MATERIALS PHYSICAL INVENTORY
MAALAEA POWER PLANT

WH	STOCK CODE	Item	Description	SOH	Unit	Price/ Unit	Total Cost/ Item
MPP	000481341	PIN	SPRING, D501298.9K	2.00	EA	9.36	18.72
MPP	000481366	BALL	PILLOW, D501298.9K	1.00	EA	82.16	82.16
MPP	000481382	BALL	PILLOW, D501298.9K	15.00	EA	78.52	1,177.82
MPP	000481408	PIN	FUEL INJ. PUMP ADJ, D501298.9K	2.00	EA	62.40	124.80
MPP	000481424	PIN	FUEL INJ. PUMP ADJ, D501298.9K	2.00	EA	62.40	124.80
MPP	000481440	PIN	FUEL INJ. PUMP ADJ, D501298.9K	26.00	EA	138.19	3,592.94
MPP	000481465	PIN	SPRING, D501298.9K	1.00	EA	9.36	9.36
MPP	000481481	PIN	SCREW TAPET, D501298.9K	3.00	EA	9.36	28.08
MPP	000481507	PIN	SHAFT, ADJ DEVICE, ELEC GOV. D501546K	2.00	EA	116.48	232.96
MPP	000481523	PIN	SPLIT, D501298.9K	2.00	EA	1.56	3.12
MPP	000481549	HARDWARE	FUEL INJ PUMP ADJ D501298.9K	2.00	EA	1,050.96	2,101.92
MPP	000481564	HARDWARE	FUEL INJ PUMP ADJ	0.00	EA	544.29	0.00
MPP	000481580	LEVER	ADJUSTING, F.I. PUMP DEVICE D502292.3K	8.00	EA	303.11	2,424.85
MPP	000481606	PIN	SCREW, TAPER F.I. PUMP ADJ D501298.9K	12.00	EA	9.36	112.32
MPP	000481622	PIN	SCREW, TAPER, D501298.9K	8.00	EA	9.36	74.88
MPP	000481648	PIN	FLANGED, D501298.9K	9.00	EA	54.53	490.77
MPP	000481663	PIN	SPLIT, D501298.9K	4.00	EA	1.56	6.24
MPP	000481689	PIN	CONNECTING, D501298.9K	6.00	EA	149.53	897.19
MPP	000481705	PIN	SPLIT, D501298.9K	2.00	EA	1.56	3.12
MPP	000481721	PIN	SPRING, D501298.9K	2.00	EA	9.36	18.72
MPP	000481747	PIN	SCREW, TAPER, D501298.9K	20.00	EA	37.95	758.90
MPP	000481762	PIN	SCREW, TAPER, D501298.9K	23.00	EA	58.60	1,347.84
MPP	000481788	PIN	COLLAR, D501298.9K	8.00	EA	35.36	282.88
MPP	000481804	PIN	SCREW, TAPER, D501298.9K	28.00	EA	9.36	262.08
MPP	000481820	PIN	SCREW, TAPER, D501298.9K	18.00	EA	22.88	411.84
MPP	000481846	PIN	COLLAR. D501298.9K	16.00	EA	35.36	565.76
MPP	000481861	NIPPLE	GREASE, ADJ DEVICE, ELEC. GOV D501546K	2.00	EA	10.40	20.80
MPP	000481887	SPRING	COIL TENSION, D502292.3K	17.00	EA	78.52	1,334.85
MPP	000481903	PIN	ROLLER, D501220K-1	5.00	EA	382.25	1,911.27
MPP	000481929	PIECE	PRESS, D501220K-1	5.00	EA	82.61	413.06
MPP	000481945	ORING	FUEL INJ PUMP DR GEAR D501220K-1	46.00	EA	3.81	175.26
MPP	000481960	BOLT	HEX SOCKET, D501220K-1	88.00	EA	6.24	549.12
MPP	000481986	ROLLER	FUEL INJ PUMP DR GEAR D501220K-1	5.00	ST	537.73	2,688.64
MPP	000482000	ORING	FUEL INJ PUMP DR GEAR D501220K-1	75.00	EA	18.77	1,407.85
MPP	000482026	SPRING	FUEL INJ PUMP DR GEAR D501220K-1	0.00	EA	0.00	0.00
MPP	000482042	PIECE	GUIDE, D501220K-1	31.00	EA	422.16	13,087.02
MPP	000482067	PIPE, OUTLET	D501351K M-10 & M-11	2.00	EA	557.66	1,115.32
MPP	000482083	CASING	DRIVE, D501220K-1	0.00	EA	1,334.66	0.00
MPP	000482109	RING	COVER, D501220K-1	8.00	EA	504.18	4,033.42
MPP	000482125	BOLT	HEX SOCKET, D501220K-1	91.00	EA	6.24	567.84
MPP	000482141	PIN	LOCATING, D501220K-1	27.00	EA	4.68	126.36
MPP	000482166	PIN	STOP, D501220-K-1	13.00	EA	43.62	567.02
MPP	000482182	VALVE	HI PRESS. COCK	5.00	EA	41.38	206.90
MPP	000482208	ORING	F.O. PUMP, INLET	170.00	EA	17.43	2,963.07
MPP	000482224	ORING	F.O. PIPE	93.00	EA	5.60	520.48
MPP	000482240	PIECE	FUEL INLET, D502343K-2	10.00	EA	1,117.29	11,172.90
MPP	000482265	PIPE	COPPER, 8MM	0.00	EA	16.43	0.00
MPP	000482281	PIPE	COPPER, 10MM	0.00	EA	25.27	0.00
MPP	000482307	SLEEVE	F.I.P. D502343K-2	2.00	EA	101.04	202.07
MPP	000482323	PLATE	LOCKING	24.00	EA	39.41	945.84
MPP	000482349	BOLT	HEX	24.00	EA	5.20	124.80
MPP	000482364	PIPE	COPPER 20MM	0.00	EA	64.10	0.00
MPP	000482380	JOINT	STRAIGHT 6MM	20.00	EA	3.87	77.40
MPP	000482406	JOINT	STRAIGHT 8MM	43.00	EA	3.06	131.58
MPP	000482422	JOINT	STRAIGHT 10MM	46.00	EA	3.84	176.64
MPP	000482448	JOINT	STRAIGHT 15MM	29.00	EA	6.99	202.71
MPP	000482463	JOINT	STRAIGHT 20MM	20.00	EA	10.63	212.60
MPP	000482489	NUT	CAP	0.00	EA	161.50	0.00
MPP	000482505	SLEEVE	F.I.P. D502343K-2	0.00	EA	131.78	0.00
MPP	000482521	PIPE	FUEL INJECTION M10 - M13	0.00	EA	1,680.50	0.00
MPP	000482547	PIPE	FUEL INJECTION WITH CONNECTOR	10.00	EA	1,683.10	16,830.95
MPP	000482562	WASHER	PLAIN	24.00	EA	3.12	74.88
MPP	000482588	TUBE	BELLOW	0.00	EA	282.89	0.00
MPP	000482604	PACKING	STARTING, AIR, D501592K	11.00	EA	15.63	171.93
MPP	000482620	BOLT	HEX	10.00	EA	10.42	104.20
MPP	000482646	BOLT	HEX	27.00	EA	5.21	140.61
MPP	000482661	BOLT	HEX	12.00	EA	11.44	137.28

NOTE: SOH - Stock on Hand

Source: DARS 3342 Report (as of 5/31/07)

Maui Electric Company, Limited

MATERIALS PHYSICAL INVENTORY
MAALAEA POWER PLANT

WH	STOCK CODE	Item	Description	SOH	Unit	Price/ Unit	Total Cost/ Item
MPP	000482687	PACKING	STARTING AIR	81.00	EA	9.85	798.04
MPP	000482703	JOINT	PIPE	9.00	EA	46.72	420.48
MPP	000482729	PACKING	STARTING, AIR, D501592K	69.00	EA	7.59	523.96
MPP	000482745	PACKING	STARTING, AIR, D501592K	54.00	EA	1.27	68.64
MPP	000482760	PACKING	STARTING, AIR, D501592K	119.00	EA	2.57	305.83
MPP	000482786	JOINT	PIPE	14.00	EA	46.73	654.22
MPP	000482802	PACKING	STARTING, AIR, D501592K	25.00	EA	1.83	45.78
MPP	000482828	PIPE	PILOT VALVE OUTLET, D501592K	5.00	EA	771.09	3,855.45
MPP	000482844	INLET PIPE	F.O. PUMP	3.00	EA	411.44	1,234.31
MPP	000482869	BOLT	JOINT	12.00	EA	32.72	392.64
MPP	000482885	PACKING	STARTING, AIR, D501592K	50.00	EA	2.02	100.94
MPP	000482901	PACKING	STARTING, AIR, D501592K	51.00	EA	2.02	102.93
MPP	000482927	GEAR	LARGE, D501271.2K	1.00	EA	2,108.23	2,108.23
MPP	000482943	GEAR	SMALL, D501271.2K	1.00	EA	872.54	872.54
MPP	000482968	SHAFT	DRIVING, D501271.2K	1.00	EA	1,208.31	1,208.31
MPP	000482984	BUSH	BEARING, D501271.2K	2.00	EA	173.46	346.92
MPP	000483008	CLIP	CIR, D501271.2K	1.00	EA	20.80	20.80
MPP	000483024	NOZZLE	GOV DR GEAR, D501271.2K	1.00	EA	41.60	41.60
MPP	000483040	PIECE	COUPLING, D501271.2K	1.00	EA	814.59	814.59
MPP	000483065	PIECE	COUPLING, D501271.2K	1.00	EA	488.80	488.80
MPP	000483081	BUSH	BEARING, D501271.2K	2.00	EA	208.00	416.00
MPP	000483107	PIN	GOV DR GEAR, D501271.2K	1.00	EA	130.74	130.74
MPP	000483123	BUSH	BEARING, D501271.2K	1.00	EA	101.91	101.91
MPP	000483149	SCREW	GOV DR GEAR, D501271.2K	2.00	EA	0.00	0.00
MPP	000483151	SPRING, 3-WAY MAGNET VALVE	MITSUBISHI MANN 3-WAY VALVE	2.00	EA	0.00	0.00
MPP	000483152	SPRING, 3-WAY MAGNET VALVE	MITSUBISHI MANN 3-WAY VALVE	3.00	EA	0.00	0.00
MPP	000483153	SEAT, VALVE, 3-WAY MAGNET VALVE	MITSUBISHI MANN 3-WAY VALVE,	3.00	EA	0.00	0.00
MPP	000483154	SPRING, 3-WAY MAGNET VALVE	MITSUBISHI MANN 3-WAY VALVE,	3.00	EA	0.00	0.00
MPP	000483155	GASKET, 3-WAY MAGNET VALVE	MITSUBISHI MAN 3-WAY VALVE,	6.00	EA	5.21	31.25
MPP	000483156	CYLINDER, 3-WAY MAGNET VALVE	MITSUBISHI MANN 3-WAY VALVE	3.00	EA	0.00	0.00
MPP	000483164	PIPE	JOINT, D501475K	10.00	EA	8.33	83.30
MPP	000483180	PACKING	F.O. PUMP, INLET	57.00	EA	14.02	798.94
MPP	000483206	PIPE	INLET, F.O. PUMP	6.00	EA	849.32	5,095.92
MPP	000483222	PIPE, OUTLET	DWG. D502349 M-12 & M-13	13.00	EA	849.32	11,041.16
MPP	000483248	REPAIR KIT	3-WAY, CAT. NO. 125-99-353	8.00	EA	72.80	582.38
MPP	000483263	PACKING	F.O. PUMP, INLET	134.00	EA	2.76	369.44
MPP	000483289	JOINT	SCREW, OUTLET DWG. D533406K	10.00	EA	77.34	773.38
MPP	000483305	PIPE	F.O. PUMP, INLET, M-10	2.00	EA	807.54	1,615.09
MPP	000483321	PACKING	F.O. PUMP, D501351K	120.00	EA	3.95	474.24
MPP	000483347	VALVE	THREE WAY, M-12 & M-13, D532446K	7.00	EA	1,183.64	8,285.47
MPP	000483362	BOLT	MANEUVERING GEAR, D501473K	10.00	EA	55.78	557.80
MPP	000483388	NUT	SLOTTED, D501473K	3.00	EA	16.64	49.92
MPP	000483404	PIN	SPLIT, D501473K	0.00	EA	2.08	0.00
MPP	000483420	PIN	MANEUVERING GEAR, D501473K	1.00	EA	65.52	65.52
MPP	000483446	PIN	STRAIGHT, D501473K	1.00	EA	22.88	22.88
MPP	000483461	RING	EXTERNAL SNAP, D501473K	1.00	EA	26.00	26.00
MPP	000483487	BALL	PILLOW, D501473K	1.00	EA	45.76	45.76
MPP	000483503	BALL	PILLOW, D501473K	1.00	EA	45.76	45.76
MPP	000483529	BALL	PILLOW, D501473K	1.00	EA	71.76	71.76
MPP	000483545	NUT	MANEUVERING GEAR, D501473K	1.00	EA	16.64	16.64
MPP	000483560	BUCKLE	TURN, D501473K	1.00	EA	22.88	22.88
MPP	000483586	NUT	MANEUVERING GEAR, D501473K	1.00	EA	3.12	3.12
MPP	000483602	LEVER	MANEUVERING GEAR, D501473K	5.00	EA	274.50	1,372.50
MPP	000483628	PIN	MANEUVERING GEAR, D501473K	7.00	EA	191.87	1,343.09
MPP	000483644	VALVE	THREE WAY, M-10 & M-11, D501473K	2.00	EA	838.49	1,676.98
MPP	000483669	REPAIR KIT	D501473K	0.00	EA	1,734.41	0.00
MPP	000483685	PIN	MANEUVERING GEAR, D532446K	6.00	EA	108.77	652.62
MPP	000483701	PACKING	MAIN STARTING VALVE, D500845K-1	4.00	EA	5.59	22.36
MPP	000483727	PIN	MANEUVERING GEAR, D532446K	6.00	EA	59.43	356.58
MPP	000483743	PACKING	MAIN STARTING VALVE, D500845K-1	17.00	EA	1.53	26.01
MPP	000483768	PIN	AXLE, D532446K	6.00	EA	65.60	393.60
MPP	000483784	PACKING	MAIN STARTING VALVE, D500845K-1	4.00	EA	2.54	10.16
MPP	000483800	PIN	SCREW, TAPER, D532446K	6.00	EA	54.81	328.86
MPP	000483826	PACKING	MAIN STARTING VALVE, D500845K-1	8.00	EA	1.52	12.16
MPP	000483842	PIN	SCREW, TAPER, D532446K	6.00	EA	88.59	531.54
MPP	000483867	PACKING	MAIN STARTING VALVE, D500845K-1	5.00	EA	88.40	442.00
MPP	000483883	PACKING	RUBBER, D501310K	6.00	EA	20.83	124.98

NOTE: SOH - Stock on Hand

Source: DARS 3342 Report (as of 5/31/07)

Maui Electric Company, Limited

MATERIALS PHYSICAL INVENTORY
MAALAEA POWER PLANT

WH	STOCK CODE	Item	Description	SOH	Unit	Price/ Unit	Total Cost/ Item
MPP	000483909	GASKET	CAMCASE DOOR, D501310K	35.00	EA	72.80	2,548.00
MPP	000483925	PACKING	CAMCASE DOOR, D501310K	13.00	EA	500.80	6,510.36
MPP	000483941	PACKING	INTAKE AIR MANIFOLD D500265K	48.00	EA	27.75	1,332.00
MPP	000483966	PACKING	INTAKE AIR MANIFOLD D500265K	18.00	EA	23.89	430.10
MPP	000483982	PACKING	INTAKE AIR MANIFOLD D500265K	2.00	EA	0.00	0.00
MPP	000484006	RING	PACKING, INTAKE AIR D500265K	80.00	EA	46.92	3,753.60
MPP	000484022	U PACKING	INTAKE AIR MANIFOLD D500265K	6.00	EA	181.10	1,086.58
MPP	000484048	U PACKING	INTAKE AIR MANIFOLD D500265K	0.00	EA	70.00	0.00
MPP	000484063	JOINT	EXPANSION	3.00	EA	864.26	2,592.78
MPP	000484089	HOSE	DRAIN PIPE	0.00	EA	0.00	0.00
MPP	000484105	UNION	RUBBER, D500986K	1.00	EA	1,008.62	1,008.62
MPP	000484121	GASKET	NOZZLE HEADER AIR COOLER 4A757-1001-2K	8.00	EA	73.86	590.87
MPP	000484147	GASKET	RETURN HEADER AIR COOLER 4A757-1001-2K	7.00	EA	102.65	718.54
MPP	000484162	GASKET	BLIND FLANGE, AIR MANIFOLD	0.00	EA	35.00	0.00
MPP	000484188	PACKING	RUBBER, M-12, S4926-1091-2	15.00	EA	105.04	1,575.60
MPP	000484204	GASKET	BLIND, FLANGE, AIR MANIFOLD	4.00	EA	20.19	80.78
MPP	000484220	PACKING	AIR COOLER M-12, S4926-1091-2	8.00	EA	106.94	855.50
MPP	000484246	PLATE	ANODE, AIR COOLER, S4926-1091-2	22.00	EA	108.83	2,394.23
MPP	000484261	PLATE	ANODE, AIR COOLER, S4926-1091-2	18.00	EA	82.56	1,486.04
MPP	000484287	PIN	CONDUCT, D501225,6K	6.00	EA	808.67	4,852.02
MPP	000484303	RING	EXTERNAL SNAP, D501225,6K	6.00	EA	3.12	18.72
MPP	000484329	JOINT	EXPANSION (MAIN) D532007K	2.00	EA	0.00	0.00
MPP	000484345	JOINT	EXPANSION, EXH. GAS, 12-1/2" HT	1.00	EA	2,365.97	2,365.97
MPP	000484360	JOINT	EXPANSION, D501225,6K	2.00	EA	790.98	1,581.96
MPP	000484386	JOINT	EXPANSION, EXH. GAS	8.00	EA	954.42	7,635.32
MPP	000484402	PACKING	EXH. GAS MANIFOLD	0.00	EA	0.00	0.00
MPP	000484428	BOLT	EXH FLANGE, CYL HEAD, D501225,6K	24.00	EA	9.57	229.68
MPP	000484444	PACKING	STEEL, OVAL, D501225,6K	1.00	EA	101.72	101.72
MPP	000484469	PACKING	EXH GAS MANIFOLD	4.00	EA	530.70	2,122.80
MPP	000484485	CONNECTOR	TAPER THREAD	10.00	EA	0.00	0.00
MPP	000484501	CONNECTOR	TAPER THREAD	10.00	EA	0.00	0.00
MPP	000484527	CONNECTOR	NORMAL THREAD	10.00	EA	0.00	0.00
MPP	000484543	CONNECTOR	ELBOW	10.00	EA	0.00	0.00
MPP	000484568	TEE	UNION	9.00	EA	0.00	0.00
MPP	000484584	TEE	UNION	2.00	EA	0.00	0.00
MPP	000484600	TEE	MALE BRANCH	3.00	EA	0.00	0.00
MPP	000484626	CONNECTOR	WELDING	4.00	EA	0.00	0.00
MPP	000484642	CONNECTOR	WELDING	4.00	EA	0.00	0.00
MPP	000484667	CONNECTOR	UNION	10.00	EA	0.00	0.00
MPP	000484683	CONNECTOR	UNION	2.00	EA	10.00	20.00
MPP	000484709	PACKING	EXH MANIFOLD D532007K	1.00	EA	135.42	135.42
MPP	000484725	PACKING	EXH MANIFOLD D532007K	25.00	EA	126.03	3,150.84
MPP	000484741	CONNECTOR	ELBOW	9.00	EA	0.00	0.00
MPP	000484766	CONNECTOR	FEMALE	10.00	EA	0.00	0.00
MPP	000484782	LOCKNUT	STRAIGHT THREAD ELBOW	7.00	EA	0.00	0.00
MPP	000484808	ELBOW	STRAIGHT THREAD	10.00	EA	0.00	0.00
MPP	000484824	JOINT	BELT, 17" WIDE X 64" OUTSIDE DIAMETER	2.00	EA	1,384.27	2,768.54
MPP	000484840	BOLT	SS, METRIC, HH	90.00	EA	0.97	87.30
MPP	000484865	BOLT	SS, METRIC, HH	99.00	EA	1.07	105.93
MPP	000484881	BOLT	SS, METRIC, HH	98.00	EA	1.77	173.46
MPP	000484907	THERMOMETER	EXHAUST PIPE	6.00	EA	45.00	270.00
MPP	000484923	PACKING	EXHAUST PIPE	6.00	EA	1.00	6.00
MPP	000484949	NUT	HEX, 24MM X 2.O	49.00	EA	1.95	95.55
MPP	000484964	BOLT	EXH MANIFOLD D501225.6K	6.00	EA	12.48	74.88
MPP	000484980	NUT	EXH MANIFOLD D501225,6K	23.00	EA	36.50	839.50
MPP	000485003	CLAMP	V-TYPE, D532007K	7.00	EA	407.95	2,855.64
MPP	000485029	PLATE	INTERMEDIATE, D532007K	4.00	EA	1,380.21	5,520.84
MPP	000485045	JOINT, NON-METALLIC EXPANSION	1000I/TEXFLEX 1400NP/MOD; FLAT	1.00	EA	1,058.72	1,058.72
MPP	000485060	BELT	EXH, EXPANSION, 12" X 64"	1.00	EA	1,098.50	1,098.50
MPP	000485086	PACKING	EXH ELBOW, D436560	6.00	EA	266.87	1,601.22
MPP	000485102	PUMP, ENGINE DRIVEN MAIN LUBE OIL AND TC	D501460, TYPE: FHW-230-10	1.00	EA	81,131.44	81,131.44
MPP	000485128	BEARING	THRUST	3.00	EA	114.40	343.20
MPP	000485144	OIL SEAL	DWG. OPF-200-10E-4824 M10 & 11	3.00	EA	28.42	85.25
MPP	000485169	BEARING	ROLLER, 10E-4824	16.00	EA	363.93	5,822.88
MPP	000485185	SEAL	OIL, 32X52X11, 10E-4824	10.00	EA	27.56	275.60
MPP	000485201	PACKING	L.O. PUMP	4.00	EA	41.60	166.40

NOTE: SOH - Stock on Hand

Source: DARS 3342 Report (as of 5/31/07)

Maui Electric Company, Limited

MATERIALS PHYSICAL INVENTORY
MAALAEA POWER PLANT

WH	STOCK CODE	Item	Description	SOH	Unit	Price/ Unit	Total Cost/ Item
MPP	000485227	PACKING	L.O. PUMP	4.00	EA	41.60	166.40
MPP	000485243	PACKING	L.O. PUMP	4.00	EA	20.80	83.20
MPP	000485268	PACKING	L.O. PUMP	4.00	EA	10.40	41.60
MPP	000485284	SHAFT	TACHOMETER DR GEAR	1.00	EA	1,546.45	1,546.45
MPP	000485300	RING	ADJUSTING	1.00	EA	93.60	93.60
MPP	000485326	PIN	TAPER, SPLIT	0.00	EA	11.06	0.00
MPP	000485342	RING	DISTANCE	1.00	EA	104.00	104.00
MPP	000485367	PIN	SPRING	1.00	EA	31.20	31.20
MPP	000485383	RING	CLAMPING	1.00	EA	4.43	4.43
MPP	000485409	RETAINER	TACHOMETER DR GEAR	1.00	EA	208.00	208.00
MPP	000485425	BOLT	TACHOMETER DR GEAR	3.00	EA	10.40	31.20
MPP	000485441	BOLT	HEXAGONAL	0.00	EA	9.31	0.00
MPP	000485466	CASING	OUTER-COMPLETE	1.00	ST	921.08	921.08
MPP	000485482	ROTOR SHAFT	TURBOCHARGER	0.00	EA	84,290.17	0.00
MPP	000485508	INSERT	VALVE, BEARING CASING	3.00	EA	229.55	688.65
MPP	000485524	COVER	EXH. GAS INLET CASING	2.00	EA	1,754.06	3,508.12
MPP	000485540	STUD	BEARING CASING	6.00	EA	0.00	0.00
MPP	000485565	ORING	BEARING CASING, TV57H-C	19.00	EA	14.22	270.11
MPP	000485581	NUT	ROTATING PART, TV57H-C	2.00	EA	196.56	393.12
MPP	000485607	RING	LABYRINTH, ROTATING PART	3.00	EA	369.67	1,109.00
MPP	000485623	TURBINE BLADE(70PCS) W/FIXING PLATES (A,	B,C) & BINDING WIRE. MARK# 6,7,8,9, &13	0.00	ST	40,729.52	0.00
MPP	000485649	SLEEVE	SHRINKING, ROTATING PART, TV57H-D	2.00	EA	736.32	1,472.64
MPP	000485664	BOWL	MIST SEPARATOR	3.00	EA	124.29	372.88
MPP	000485680	PACKING	M12-M-13	12.00	EA	5.21	62.52
MPP	000485706	NOZZLE	TURBINE, 405CM-2, FIG.11	0.00	EA	11,311.78	0.00
MPP	000485722	WASHER	TOOTHED-LOCKED, D501349K	34.00	EA	1.04	35.36
MPP	000485748	VALVE	OUTLET. D501349K	3.00	EA	832.95	2,498.86
MPP	000485763	PACKING	M-10 & 11 TV57H-C (ITEM 22)	7.00	EA	3.33	23.30
MPP	000485789	DIFFUSER	29MM, BLOWER CASING, FIG.13	2.00	EA	12,605.84	25,211.68
MPP	000485805	VALVE	FLANGED, GLOVE, D501384K-1	1.00	EA	119.78	119.78
MPP	000485821	NUT	ROTATING PART TV57H-C	3.00	EA	190.32	570.96
MPP	000485847	RING	THRUST COLLAR, TV57H-C	0.00	EA	2,947.36	0.00
MPP	000485862	RING	THRUST COLLAR, TV57H-D	0.00	EA	2,875.37	0.00
MPP	000485888	SLEEVE	SHRINKAGE, O.S. TV57H-C, LOWER SIDE	2.00	EA	915.20	1,830.40
MPP	000485904	WIRE	BINDING	1.00	EA	297.90	297.90
MPP	000485920	PLATE	LABYRINTH, TURBINE, TV57H-D, INNER	7.00	EA	1,156.51	8,095.57
MPP	000485946	U-NUT	BEARING CASING, TV57H-C	8.00	EA	1.50	12.03
MPP	000485961	SLEEVE	SHRINKING, BLOWER SIDE, TV57H-C	3.00	EA	721.02	2,163.05
MPP	000485987	NUT	HEXAGONAL	32.00	EA	10.27	328.67
MPP	000486001	STUD	BEARING CASING, TV57H-C	7.00	EA	20.80	145.60
MPP	000486027	PACKING	PAPER FILTER, TV57H-C	3.00	EA	16.00	48.00
MPP	000486043	SPRING	SET, PAPER FILTER	12.00	EA	20.16	241.92
MPP	000486068	GASKET	MIST SEPARATOR	12.00	EA	6.57	78.80
MPP	000486084	ORING	MIST SEPARATOR	10.00	EA	3.12	31.24
MPP	000486100	PACKING	BEARING CASING, TV57H-D	18.00	EA	15.99	287.85
MPP	000486126	PACKING	BEARING CASING, TV57H-D	18.00	EA	14.73	265.10
MPP	000486142	PACKING	BEARING CASING, TV57H-D	19.00	EA	7.85	149.11
MPP	000486167	PLATE	LABYRINTH, TURBINE, TV57H-C	2.00	EA	1,174.51	2,349.01
MPP	000486183	PACKING	GAS ADMISSION, CASING, TV57H-D	4.00	EA	22.40	89.62
MPP	000486209	PICK UP & MAGNET	TURBO, TV57H-D, M-13	12.00	EA	675.00	8,100.00
MPP	000486225	ORING	TURBO, TV57H-C & D	5.00	EA	9.14	45.70
MPP	000486241	ELEMENT	FILTER, TV57H-C & D	0.00	EA	65.52	0.00
MPP	000486266	ORING	TURBO, TV57H-C & D	17.00	EA	3.74	63.58
MPP	000486282	PICK UP & MAGNET	TURBO, TV57H-C, M-10	0.00	EA	80.05	0.00
MPP	000486308	VALVE	VALVE INSERT, PLUG, FIG. 10	1.00	EA	350.48	350.48
MPP	000486324	LABYRINTH PLATE	BLOWER SIDE (INNER)	3.00	EA	1,108.11	3,324.32
MPP	000486340	PIN	STRAIGHT, TV57H-D	4.00	EA	7.08	28.32
MPP	000486365	PLATE	LOCK, GAS ADMISSION CASING, TV57H-D	25.00	EA	2.84	70.88
MPP	000486381	CAP	VALVE, BEARING CASING, FIG. 10	2.00	EA	360.64	721.28
MPP	000486407	COVER	BLOWER CASING, FIG. 13	1.00	EA	604.32	604.32
MPP	000486423	NUT	BLOWER CASING, FIG. 13	27.00	EA	0.00	0.00
MPP	000486449	PLATE	LOCK, BLOWER CASING, FIG. 13	163.00	EA	1.19	193.97
MPP	000486464	DIFFUSER	BLOWER CASING 33MM	1.00	EA	4,426.80	4,426.80
MPP	000486480	RING	NOZZLE, COVER, FIG. 11	2.00	EA	6,692.30	13,384.60
MPP	000486506	RING	NOZZLE, 388CM2, FIG. 11	0.00	EA	17,144.60	0.00
MPP	000486522	CLAW	GAS INLET CASING, FIG. 11	12.00	EA	32.42	389.04

NOTE: SOH - Stock on Hand

Source: DARS 3342 Report (as of 5/31/07)

Maui Electric Company, Limited

MATERIALS PHYSICAL INVENTORY
MAALAEA POWER PLANT

WH	STOCK CODE	Item	Description	SOH	Unit	Price/ Unit	Total Cost/ Item
MPP	000486548	DISC	COVER, BRG CASING, FIG. 10	1.00	EA	1,851.44	1,851.44
MPP	000486563	ORING	BEARING CASING, TV57H-C	4.00	EA	5.92	23.66
MPP	000486589	ORING	TOOL	8.00	EA	4.17	33.32
MPP	000486605	ORING	BLOWER CASING, TV57H-D	39.00	EA	42.21	1,646.03
MPP	000486621	ORING	PACKING, BEARING, CASING	33.00	EA	136.47	4,503.35
MPP	000486647	ORING	BEARING CASING, M-12, M-13	33.00	EA	54.31	1,792.27
MPP	000486662	ORING	BEARING CASING, M-12, M-13	28.00	EA	66.62	1,865.28
MPP	000486688	WASHER	TOOTH	57.00	EA	1.98	112.61
MPP	000486704	ORING	BEARING CASING, M-12, M-13	34.00	EA	78.39	2,665.16
MPP	000486720	CONNECTORS	FOR PICK UP & MAGNET	4.00	EA	145.82	583.30
MPP	000486746	ORING	BEARING CASING, M-12, M-13	40.00	EA	48.19	1,927.62
MPP	000486761	BEARING	TURBINE SIDE, M-12, M-13	7.00	EA	5,180.46	36,263.24
MPP	000486787	BEARING	BLOWER SIDE, M-12, M-13	3.00	EA	5,442.32	16,326.96
MPP	000486803	TURBOCHARGER	EXHAUST GAS, COMPLETE, M-12, M-13	1.00	EA	161,154.26	161,154.26
MPP	000486829	BOLT	SPECIAL, BRG CASING, FIG. 10	19.00	EA	29.32	557.11
MPP	000486845	NUTS	ROTATING PART	29.00	EA	21.55	624.95
MPP	000486860	BOLT	SPECIAL, BRG CASING, FIG. 10	30.00	EA	29.38	881.31
MPP	000486886	NOZZLE	TURBINE, 427CM-2, FIG. 11	0.00	EA	26.96	0.00
MPP	000486902	TURBOCHARGER	EXHAUST GAS, COMPLETE	0.00	EA	0.00	0.00
MPP	000486928	PACKING	BEARING CASING, FIG. 10	17.00	EA	2.27	38.59
MPP	000486944	PACKING	BEARING CASING, FIG. 10	15.00	EA	1.21	18.15
MPP	000486969	BEARING	BLOWER SIDE, FIG.10, MARK#75	4.00	EA	2,465.21	9,860.83
MPP	000486985	PACKING	OVAL, BRG. CASING, FIG. 10	4.00	EA	2.28	9.12
MPP	000487009	BEARING	TURBINE SIDE, M-10 & 11	1.00	EA	2,797.60	2,797.60
MPP	000487025	ORING	BEARING CASING, FIG. 11	49.00	EA	18.38	900.62
MPP	000487041	PACKING	BEARING CASING, FIG. 10	20.00	EA	12.68	253.62
MPP	000487066	PACKING	BEARING CASING, TV57H-C	23.00	EA	10.87	250.01
MPP	000487082	PACKING	T/C INLET LINE,	34.00	EA	4.88	165.92
MPP	000487108	PACKING	BEARING CASING, FIG. 10	60.00	EA	7.78	466.80
MPP	000487124	ORING	BEARING CASING, FIG. 10	0.00	EA	24.31	0.00
MPP	000487140	ORING	BEARING CASING, FIG. 10	21.00	EA	52.75	1,107.75
MPP	000487165	PACKING	BEARING CASING, M871/A27X38	11.00	EA	15.77	173.52
MPP	000487181	WASHER	GAS INLET CASING, M871/280X292.7	30.00	EA	3.13	93.84
MPP	000487207	BOLT	HEX, GAS INLET CASING, FIG. 11	48.00	EA	7.29	349.98
MPP	000487223	PLATE	LOCK, GAS INLET CASING, FIG. 11	42.00	EA	27.72	1,164.41
MPP	000487249	BOLT	HEX, GAS INLET CASING, FIG. 11	30.00	EA	8.27	248.02
MPP	000487264	PLATE	LOCK, GAS INLET CASING, FIG. 11	28.00	EA	17.66	494.44
MPP	000487280	BOLT	STUD, TURBINE CASING & PEDESTAL,	47.00	EA	15.60	733.20
MPP	000487306	U-NUT	TURBINE CASING & PEDESTAL, FIG. 12	15.00	EA	4.59	68.87
MPP	000487322	BOLT	HEX, TURBINE CASING & PEDESTAL, FIG. 12	84.00	EA	5.20	436.80
MPP	000487348	WASHER	TURBINE CASING & PEDESTAL, FIG. 12	87.00	EA	2.31	200.97
MPP	000487363	BOLT	SS, 16MM X 2.0 X 81MM, FIG. 12	24.00	EA	24.48	587.52
MPP	000487389	BOLT	STUD, BLOWER CASING, FIG. 13	32.00	EA	18.81	601.92
MPP	000487405	PIPE	FLEXIBLE, D501349K	4.00	EA	10.55	42.20
MPP	000487421	PACKING	CYL COVER, D501349K	142.00	EA	5.20	738.40
MPP	000487447	PIPE	F.O.V. COOLING WATER, D501349K	8.00	EA	194.01	1,552.10
MPP	000487462	ORING	NATIONAL, D501383K	16.00	EA	0.46	7.41
MPP	000487488	GASKET	CYL COVER, D501349K	122.00	EA	8.58	1,047.19
MPP	000487504	GASKET	CYL COVER, D501349K	71.00	EA	9.40	667.33
MPP	000487520	GASKET	CYL COVER, D501349K	162.00	EA	4.91	795.63
MPP	000487546	GASKET	CYL COVER, COOLING WATER PIPING SYS.	140.00	EA	3.12	436.84
MPP	000487561	GASKET	CYL COVER, COOLING WATER PIPING SYS.	115.00	EA	5.18	596.18
MPP	000487587	PIPE	OUTLET, D500705K-1	7.00	EA	281.50	1,970.47
MPP	000487603	ORING	COOLING WATER, OUTLET & DRAIN PIPE	72.00	EA	0.28	20.38
MPP	000487629	ORING	CYL COVER, D501349K	86.00	EA	0.44	38.23
MPP	000487645	JOINT, FLEXIBLE, PIPE COMPLETE, D50134	(C.W. PIPING 810)	104.00	EA	38.42	3,995.94
MPP	000487660	SEAL	FLEXIBLE PIPE	87.00	EA	5.46	475.22
MPP	000487686	L.O. LINE	W/ STEEL JIC ADPT #2024-2-4	7.00	ST	97.07	679.48
MPP	000487702	LINE	SHORT, LUBRICATING INT. VALVE	18.00	EA	19.45	350.10
MPP	000487728	FILTER	PAPER ELEMENT, TURBO L.O.	18.00	EA	65.65	1,181.77
MPP	000487744	PACKING	CYL & TIE ROD	25.00	EA	6.88	172.00
MPP	000487769	PIPE JOINT	L TYPE CYL & TIE ROD	7.00	EA	28.33	198.31
MPP	000487785	TIE ROD LUBE PIPE	TIE ROD CYL & TIE ROD	5.00	EA	71.00	355.00
MPP	000487801	PIPE JOINT	T-TYPE CYL & TIE ROD	5.00	EA	6.24	31.20
MPP	000487827	PIPE JOINT	L-TYPE CYL & TIE ROD LO PIPING SYSTEM	5.00	EA	10.28	51.39
MPP	000487843	BOLT	JOINT, CYL LINER LUBRICATION PIPING SYS	59.00	EA	225.00	13,274.92
MPP	000487868	PIPE JOINT	L TYPE, D501383K-1	20.00	EA	374.17	7,483.40

NOTE: SOH - Stock on Hand

Source: DARS 3342 Report (as of 5/31/07)

Maui Electric Company, Limited

MATERIALS PHYSICAL INVENTORY
MAALAEA POWER PLANT

WH	STOCK CODE	Item	Description	SOH	Unit	Price/ Unit	Total Cost/ Item
MPP	000487884	PACKING	CYL LINER LUBRICATION PIPING SYS	451.00	EA	1.12	505.12
MPP	000487900	JOINT	EXPANSION, 2 INCH	0.00	EA	0.00	0.00
MPP	000487926	PIPE JOINT	RD/VALVE GEAR	5.00	EA	69.33	346.67
MPP	000487942	PIPE	LUB OIL, D500039K-2	9.00	EA	571.94	5,147.50
MPP	000487967	COCK	FLANGED, D501596-K1	2.00	EA	426.40	852.80
MPP	000487983	PACKING	BALL, F.I. VALVE C.W. PIPE	9.00	EA	1.04	9.36
MPP	000488007	VALVE	BALL, F.I. VALVE C.W. PIPE	20.00	EA	4.00	79.99
MPP	000488023	VALVE	BALL, F.I. VALVE C.W. PIPE	0.00	EA	59.70	0.00
MPP	000488049	CAP SCREW	CYL COVER, D501349K	40.00	EA	0.00	0.00
MPP	000488064	BOLT	CYL COVER, D501349K	9.00	EA	3.91	35.15
MPP	000488080	JOINT	F.I. VALVE C.W. PIPEV	3.00	EA	8.32	24.96
MPP	000488106	BOLT	CYL COVER, D501349K	5.00	EA	3.64	18.20
MPP	000488122	PACKING	CYL COVER, D501349K	32.00	EA	0.77	24.79
MPP	000488148	JOINT	EXPANSION-PUMP DISCH TO ENGINE	0.00	EA	0.00	0.00
MPP	000488163	SUPPORT	RD/VALVE GEAR	33.00	EA	17.85	589.16
MPP	000488189	WASHER	RD/VALVE GEAR	46.00	EA	4.45	204.70
MPP	000488205	WASHER	RD/VALVE GEAR	48.00	EA	4.45	213.60
MPP	000488221	NUTS	RD/VALVE GEAR	44.00	EA	5.49	241.56
MPP	000488247	WASHER	RD/VALVE GEAR	55.00	EA	4.40	242.00
MPP	000488262	GASKET	F.O. D501596K-1	10.00	EA	3.12	31.20
MPP	000488288	SPRING	F.O. D501596K-1	8.00	EA	93.60	748.80
MPP	000488304	SPRING	F.O. D501596K-1	8.00	EA	151.84	1,214.72
MPP	000488320	GASKET	F.O. D501596K-1	4.00	EA	1.04	4.16
MPP	000488346	RING	F.O. D501596K-1	8.00	EA	105.91	847.28
MPP	000488361	PIPE	CAMSHAFT BRG	9.00	EA	187.20	1,684.80
MPP	000488387	BOLT	CTL COV - C.W.P.	44.00	EA	0.13	5.72
MPP	000488403	NUT	CYL COV - C.W.P.	94.00	EA	0.11	10.34
MPP	000488420	RING, BACK UP	FOR JACKET COOLING WATER OUTLET	98.00	EA	5.17	507.11
MPP	000488429	CAP SCREW	HEX HEAD	45.00	EA	1.26	56.70
MPP	000488445	VALVE, INLET & OUTLET	FUEL PUMP	36.00	EA	129.87	4,675.49
MPP	000488460	PACKING	FUEL OIL PIPING SYS	28.00	EA	3.76	105.22
MPP	000488486	U-BOLT	F.O.P.	8.00	EA	2.26	18.08
MPP	000488502	U-BOLT	F.O.P.	16.00	EA	2.30	36.80
MPP	000488528	PIPE	ENGINE	0.00	EA	280.80	0.00
MPP	000488544	BOLT	ENGINE	10.00	EA	41.60	416.00
MPP	000488569	PACKING	ENGINE	33.00	EA	2.03	67.13
MPP	000488585	JOINT	ENGINE	3.00	EA	10.40	31.20
MPP	000488601	PIPE	C.W.P. OUTLET & DRAIN, D501383K-1	2.00	EA	369.25	738.50
MPP	000488627	PACKING	F.O. DRAIN PIPING SYS	19.00	EA	4.29	81.51
MPP	000488643	PIPE	F.O. DRAIN PIPING SYS	4.00	EA	69.94	279.76
MPP	000488668	PIPE	F.O. DRAIN PIPING SYS	12.00	EA	140.55	1,686.64
MPP	000488684	PIPE	F.O. DRAIN PIPING SYS	4.00	EA	201.88	807.54
MPP	000488700	PIPE	F.O. INJECTION DRAIN	10.00	EA	107.12	1,071.20
MPP	000488726	UNION	F.O. DRAIN PIPING SYS	16.00	EA	14.31	228.97
MPP	000488742	JOINT	F.O. DRAIN PIPING SYS	11.00	EA	16.01	176.07
MPP	000488767	PACKING	CRANKCASE	76.00	EA	3.12	237.12
MPP	000488783	PACKING	F.O. DRAIN PIPING SYS	34.00	EA	9.04	307.36
MPP	000488809	PIPE	F.O. DRAIN PIPING SYS	4.00	EA	462.80	1,851.20
MPP	000488825	JOINT	F.O. DRAIN PIPING SYS	7.00	EA	14.23	99.61
MPP	000488841	ELEMENT	RACOR	37.00	EA	10.48	387.73
MPP	000488866	PACKING	ENGINE	41.00	EA	5.33	218.42
MPP	000488882	NUT	RD/VALVE GEAR	4.00	EA	23.25	93.00
MPP	000488908	RETAINER	RD/VALVE GEAR	15.00	EA	11.19	167.85
MPP	000488924	PIPE	F.I. VALVE C.W. PIPE SYS	6.00	EA	477.56	2,865.34
MPP	000488940	NOZZLE	CYL LINER & TIE ROD	2.00	EA	0.00	0.00
MPP	000488965	PACKING	CRANKCASE	152.00	EA	17.18	2,611.38
MPP	000488981	RETAINER	CRANKCASE	89.00	EA	23.46	2,088.07
MPP	000489005	JOINT	RD/VALVE GEAR	1.00	EA	108.99	108.99
MPP	000489021	PACKING	GEAR CASE INSIDE, L.O. PIPING SYS.	35.00	EA	3.08	107.80
MPP	000489047	PACKING	GEAR CASE INSIDE, L.O. PIPING SYS.	58.00	EA	2.87	166.54
MPP	000489062	PACKING	GEAR CASE INSIDE, L.O. PIPING SYS.	113.00	EA	3.70	418.08
MPP	000489088	PACKING	GEAR CASE INSIDE, L.O. PIPING SYS.	96.00	EA	2.90	278.20
MPP	000489104	PACKING	GEAR CASE INSIDE	6.00	EA	9.25	55.50
MPP	000489120	PACKING	GEAR CASE INSIDE	6.00	EA	21.58	129.48
MPP	000489122	PACKING, COPPER	FOR LUBE OIL PIPING SYSTEM	233.00	EA	0.00	0.00
MPP	000489146	PACKING	PAPER FILTER	7.00	EA	1.93	13.49
MPP	000489161	PACKING	BRACKET 276166-0010-6	14.00	EA	8.62	120.70

NOTE: SOH - Stock on Hand

Source: DARS 3342 Report (as of 5/31/07)

Maui Electric Company, Limited

MATERIALS PHYSICAL INVENTORY
MAALAEA POWER PLANT

WH	STOCK CODE	Item	Description	SOH	Unit	Price/ Unit	Total Cost/ Item
MPP	000489187	SET SPRING	PAPER FILTER	22.00	EA	4.24	93.26
MPP	000489199	INSERT (SPIDER)	ELASTOMERIC, BUNA-N	11.00	EA	9.36	102.98
MPP	000489201	COUPLING, HALF	TYPE L JAW 1-1/8" BORE, STEEL	3.00	EA	15.34	46.02
MPP	000489203	PUMP	CORO-VANE, 2"	1.00	EA	2,109.24	2,109.24
MPP	000489229	ORING SEAL KIT (SC100S)	D433-52489	6.00	ST	109.20	655.20
MPP	000489245	PUMP	VANE 2"	1.00	EA	1,134.00	1,134.00
MPP	000489260	SEAL	GEAR, D433-52489	5.00	EA	16.22	81.10
MPP	000489286	GASKET	D433-52489	0.00	EA	0.00	0.00
MPP	000489302	GASKET	D433-52489	1.00	EA	0.00	0.00
MPP	000489328	SEAL	OIL	4.00	EA	3.87	15.46
MPP	000489344	GASKET	D433-52489	0.00	EA	0.00	0.00
MPP	000489369	PUMP	GEAR, D433-52489	3.00	EA	3,516.83	10,550.49
MPP	000489385	SEAL	MECHANICAL, M-12, M13	6.00	EA	189.92	1,139.51
MPP	000489401	VANE	VIKING PUMP, M-12, M13	12.00	EA	24.69	296.23
MPP	000489427	ROD	PUSH, M-12, M13	12.00	EA	8.33	99.96
MPP	000489443	ORING	RELIEF VALVE, M-12, M13	11.00	EA	2.08	22.92
MPP	000489468	BEARING	ROLLER, M-12, M13	8.00	EA	65.71	525.71
MPP	000489484	SEAL	GREASE, M-12, M13	6.00	EA	9.11	54.68
MPP	000489500	ORING	CASING, M-12, M13	11.00	EA	11.27	123.96
MPP	000489526	ORING	D433-52488	5.00	EA	7.50	37.50
MPP	000489542	SEAL	OIL, D433-52488	0.00	EA	0.00	0.00
MPP	000489567	SEAL	OIL	5.00	EA	110.65	553.27
MPP	000489583	ORING	D433-52488	8.00	EA	7.50	60.00
MPP	000489609	GASKET	D433-52488	3.00	EA	5.72	17.16
MPP	000489625	SEAL	MECHANICAL	0.00	EA	909.53	0.00
MPP	000489641	BUSH	COUPLING	2.00	EA	46.25	92.49
MPP	000489666	BEARING	NEEDLE	2.00	EA	107.91	215.82
MPP	000489682	BEARING	NEEDLE	6.00	EA	107.91	647.46
MPP	000489708	SHAFT	GEAR - COMPL	1.00	ST	647.46	647.46
MPP	000489724	MAGNETROL SOLENOID VALVE, 1-1/2"	120 VDC 115 PSI 23 WATTS	0.00	EA	561.75	0.00
MPP	000489740	REPAIR KIT	F.O. DAY TANK	3.00	EA	246.99	740.98
MPP	000489765	SOLENOID VALVE, ATKOMATIC	1-1/2" 125VDC	2.00	EA	1,633.08	3,266.15
MPP	000489781	NUT & BOLT	M16 X 45	4.00	EA	0.00	0.00
MPP	000489807	REPAIR KIT, ATKOMATIC	1-1/2" 125 VDC	4.00	EA	343.31	1,373.25
MPP	000489823	NUT & BOLT	M16 X 55	0.00	EA	0.00	0.00
MPP	000489849	ELEMENT	FILTER	4.00	EA	487.76	1,951.04
MPP	000489864	VALVE	AIR, VENT	2.00	EA	312.50	625.00
MPP	000489880	PACKING	F.O. PRIMARY FILTER	2.00	ST	0.00	0.00
MPP	000489906	GASKET	F.O. PRIMARY FILTER	5.00	EA	3.13	15.65
MPP	000489922	GASKET	F.O. PRIMARY FILTER	2.00	EA	0.00	0.00
MPP	000489948	O RING	METRIC 5.7 X 169.3 FLUOROELASTOMER 75	30.00	EA	18.08	542.33
MPP	000489963	GASKET	F.O. PRIMARY FILTER	3.00	EA	30.62	91.86
MPP	000489989	ORING	F.O. PRIMARY FILTER DP-11686	2.00	EA	15.42	30.84
MPP	000490003	GASKET	F.O. PRIMARY FILTER DP-11686	4.00	EA	19.79	79.16
MPP	000490029	ORING	F.O. PRIMARY FILTER DP-11686	5.00	EA	7.71	38.55
MPP	000490045	ELEMENT	FILTER	1.00	EA	975.52	975.52
MPP	000490060	PACKING	F.O. SECONDARY FILTER	2.00	ST	0.00	0.00
MPP	000490086	GASKET	F.O. SECONDARY FILTER	2.00	EA	0.00	0.00
MPP	000490102	GASKET	M-157 F.O. SECONDARY FILTER	10.00	EA	72.59	725.92
MPP	000490128	GASKET	M-157 F.O. SECONDARY FILTER	10.00	EA	31.10	310.96
MPP	000490144	TUBE	1/2 X 500	0.00	EA	0.00	0.00
MPP	000490169	TUBE	1/2 X 150, DK109728	0.00	EA	0.00	0.00
MPP	000490185	SEAL	OIL, JISD487012, 433-52491	4.00	EA	7.50	30.00
MPP	000490201	GASKET	L.O. PRIMING PUMP, 433-52491	2.00	EA	0.00	0.00
MPP	000490227	GASKET	L.O. PRIMING PUMP, 433-52491	2.00	EA	0.00	0.00
MPP	000490243	GASKET	L.O. PRIMING PUMP, 433-52491	2.00	EA	0.00	0.00
MPP	000490268	ORING SEAL KIT (SC1000)	L.O. PRIMING PUMP, 433-52491	9.00	ST	136.01	1,224.08
MPP	000490284	O-RING	L.O. PRIMING PUMP	2.00	EA	7.71	15.42
MPP	000490300	SEAL	MECHANICAL	2.00	EA	2,050.29	4,100.57
MPP	000490326	RING	COUPLING	15.00	EA	7.71	115.62
MPP	000490342	BEARING	METAL	4.00	EA	1,541.57	6,166.27
MPP	000490367	SHAFT	GEAR - COMPLETE	1.00	EA	5,665.89	5,665.89
MPP	000490383	ORING	T/C L.O. PRIMING PUMP, 433-52490	0.00	EA	2.96	0.00
MPP	000490409	SEAL	OIL	0.00	EA	0.00	0.00
MPP	000490425	SEAL	T/C L.O. PRIMING PUMP, 433-52490	5.00	EA	7.50	37.50
MPP	000490441	GASKET	T/C L.O. PRIMING PUMP, 433-52490	2.00	EA	0.00	0.00
MPP	000490466	GASKET	T/C L.O. PRIMING PUMP, 433-52490	1.00	EA	0.00	0.00

NOTE: SOH - Stock on Hand

Source: DARS 3342 Report (as of 5/31/07)

Maui Electric Company, Limited

MATERIALS PHYSICAL INVENTORY
MAALAEA POWER PLANT

WH	STOCK CODE	Item	Description	SOH	Unit	Price/ Unit	Total Cost/ Item
MPP	000490482	GASKET	T/C L.O. PRIMING PUMP, 433-52490	1.00	EA	13.00	13.00
MPP	000490508	GAUGE	PRESSURE, 3/8 x 4 KG	1.00	EA	0.00	0.00
MPP	000490524	GAUGE	PRESSURE, 3/8	1.00	EA	0.00	0.00
MPP	000490540	GAUGE	PRESSURE, 3/8 x 4 KG	5.00	EA	0.00	0.00
MPP	000490565	GAUGE	PRESSURE, 3/8 X 50 KG	1.00	EA	0.00	0.00
MPP	000490581	GAUGE	PRESSURE, 3/8 X 10 KG	1.00	EA	0.00	0.00
MPP	000490607	PUMP	GEAR, 433-52491	1.00	EA	8,015.29	8,015.29
MPP	000490623	PUMP	GEAR	1.00	EA	1,711.85	1,711.85
MPP	000490649	ORING	VALVE GEAR LO PUMP, 43352487	36.00	EA	2.44	87.66
MPP	000490664	SEAL	OIL, TC19328	9.00	EA	3.59	32.31
MPP	*000490680*	*ORING*	*VALVE GEAR LO PUMP*	*35.00*	*EA*	*1.36*	*47.64*
MPP	000490706	SEAL KIT (TYPE: SB10S)	(CONSIST OF: #4,11,12,17 &118)	5.00	EA	57.20	286.00
MPP	000490722	PUMP	GEAR	1.00	EA	1,050.00	1,050.00
MPP	000490748	MOTOR	3/4 HP, FC143T FRAME,	1.00	EA	230.51	230.51
MPP	000490763	GEAR A	V/G/L/O, 433-52487	1.00	EA	499.20	499.20
MPP	000490789	GEAR B	V/G/L/O, 433-52487	1.00	EA	499.20	499.20
MPP	000490805	SEAL	MECHANICAL	4.00	EA	917.28	3,669.12
MPP	000490821	BUSH	COUPLING	0.00	EA	30.83	0.00
MPP	000490847	BEARING	NEEDLE	2.00	EA	77.08	154.16
MPP	000490862	BEARING	NEEDLE	6.00	EA	77.08	462.47
MPP	000490888	SHAFT	GEAR - COMPLETE	1.00	EA	593.50	593.50
MPP	000490904	EXTRUDER	IMPELLER	1.00	ST	0.00	0.00
MPP	000490920	PACKING	SLUDGE TRANSFER PUMP	13.00	EA	0.00	0.00
MPP	000490946	SEAL	OIL	2.00	EA	0.00	0.00
MPP	000490961	GASKET	SLUDGE TRANSFER PUMP	2.00	EA	0.00	0.00
MPP	000490987	REPAIR KIT	ASCO	2.00	EA	288.71	577.42
MPP	000491001	VALVE	GLOBE W/COMPANION	1.00	EA	0.00	0.00
MPP	000491027	VALVE	GLOBE W/COMPANION	2.00	EA	0.00	0.00
MPP	000491043	PACKING	L.O. SUMP TANK	13.00	EA	6.24	81.12
MPP	000491068	PIPE	OUTLET, D500705K-1	0.00	EA	0.00	0.00
MPP	000491084	NUT & BOLT	M16 X 50	8.00	EA	0.00	0.00
MPP	000491100	NUT & BOLT	M16 X 55	20.00	EA	0.00	0.00
MPP	000491126	NUT & BOLT	M20 X 70	8.00	EA	0.00	0.00
MPP	000491142	FLANGE	WELDED NECK, 150#	0.00	EA	60.79	0.00
MPP	000491167	BOLT	EYE	4.00	EA	0.00	0.00
MPP	000491183	PACKING	PASS PARTITION	18.00	ST	983.70	17,706.63
MPP	000491209	PACKING	GIRTH FLANGE	12.00	EA	153.17	1,838.05
MPP	000491225	GASKET	SHELL FLANGE	7.00	EA	173.95	1,217.63
MPP	000491241	GASKET	CHANNEL FLANGE	8.00	EA	489.60	3,916.77
MPP	000491266	GASKET	NOZZLE	3.00	EA	0.00	0.00
MPP	000491282	ANODE, ZINC CONDENSER, 11#	w/ 5/8" dia, recessed pipe core center	20.00	EA	41.54	830.82
MPP	000491308	NUT & BOLT	L.O. COOLER	6.00	EA	0.00	0.00
MPP	000491324	ANODE, ZINC HULL W (2) 5/8" DIA.	BOLT HOLES ON 6" CENTERS	80.00	EA	35.59	2,847.32
MPP	000491340	PLUG	WOODEN	273.00	EA	0.00	0.00
MPP	000491365	PROTECTOR	CATHODIC	0.00	EA	0.00	0.00
MPP	000491381	SHEET	BACK UP	6.00	EA	0.00	0.00
MPP	000491407	PACKING	PASS PARTITION	4.00	EA	6.24	24.96
MPP	000491423	PACKING	PASS PARTITION	5.00	EA	2.08	10.40
MPP	000491449	ORING	STOCK, BUNA-N, 3/8"	20.00	EA	0.89	17.80
MPP	000491464	GASKET	NOZZLE	4.00	EA	0.00	0.00
MPP	000491480	PACKING	PASS PARTITION PLATE, DK109583	8.00	EA	451.18	3,609.45
MPP	000491506	PACKING	GIRTH FLANGE	2.00	EA	118.06	236.11
MPP	000491522	THERMOMETER	T/C L.O. COOLER, DK109583	6.00	EA	63.09	378.54
MPP	000491548	*** DO NOT USE - TO BE DELETED ****	GASKET - SHELL FLANGE	0.00	EA	0.00	0.00
MPP	000491563	GASKET	SHELL FLANGE	2.00	EA	15.08	30.16
MPP	000491589	GASKET	CHANNEL FLANGE	6.00	EA	275.22	1,651.31
MPP	000491605	BOLT	EYE	7.00	EA	0.00	0.00
MPP	000491621	PLUG	WOODEN	51.00	EA	0.00	0.00
MPP	000491647	PROTECTION	CATHODIC, TURBO	0.00	EA	0.00	0.00
MPP	000491662	VALVE	GLOBE, 10K-40	0.00	EA	0.00	0.00
MPP	000491688	THERMOMETER	HOT WATER HEATER, DK109767	4.00	EA	0.00	0.00
MPP	000491704	ORING	OIL FILTER	3.00	EA	29.12	87.36
MPP	000491720	ORING	OIL FILTER	3.00	EA	38.83	116.49
MPP	000491746	ORING	OIL FILTER	0.00	EA	22.36	0.00
MPP	000491761	GASKET	OIL FILTER	2.00	EA	0.00	0.00
MPP	000491787	ORING	OIL FILTER	1.00	EA	38.83	38.83
MPP	000491803	HEATER	IMMERSION	0.00	EA	1,464.52	0.00

NOTE: SOH - Stock on Hand

Source: DARS 3342 Report (as of 5/31/07)

Maui Electric Company, Limited

MATERIALS PHYSICAL INVENTORY
MAALAEA POWER PLANT

WH	STOCK CODE	Item	Description	SOH	Unit	Price/ Unit	Total Cost/ Item
MPP	000491829	SEAL "U" CUP	SANDPIPER PUMP	4.00	EA	2.81	11.24
MPP	000491845	GASKET, VALVE BODY	SANDPIPER PUMP	1.00	EA	2.86	2.86
MPP	000491860	GASKET, VALVE BODY	SANDPIPER PUMP	1.00	EA	2.86	2.86
MPP	000491886	DIAPHRAGM, BUNA N	SANDPIPER PUMP	2.00	EA	50.13	100.26
MPP	000491902	RETAINER	OPER. WATER DISC	0.00	EA	562.11	0.00
MPP	000491928	O RING	SANDPIPER PUMP	4.00	EA	2.97	11.88
MPP	000491944	VALVE, FLAP	SANDPIPER PUMP	4.00	EA	25.67	102.68
MPP	000491969	GASKET, SEAT	SANDPIPER PUMP	6.00	EA	3.02	18.12
MPP	000491985	GASKET, FLANGE	SANDPIPER PUMP	4.00	EA	3.03	12.12
MPP	000492009	PAD, HINGE	SANDPIPER PUMP	4.00	EA	2.35	9.40
MPP	000492025	BEARING, SLEEVE	PURIFIER SLUDGE PUMP	6.00	EA	2.96	17.76
MPP	000492041	WASHER, SEALING	SANDPIPER, MODEL SB1-A PURIFIER	9.00	EA	1.45	13.02
MPP	000492066	DIAPHRAGM (BUNA-N)	SANDPIPER, MODEL SB1-A PURIFIER SLUDGE	8.00	EA	45.14	361.13
MPP	000492082	GASKET (BUNA-N)	SANDPIPER MODEL SB1-A PURIFIER SLUDGE	24.00	EA	4.14	99.44
MPP	000492108	GASKET, MANIFOLD	SANDPIPER MODEL SB1-A PURIFIER SLUDGE	8.00	EA	2.37	18.98
MPP	000492124	SEAT, VALVE	SANDPIPER MODEL SB1-A PURIFIER SLUDGE	10.00	EA	28.53	285.28
MPP	000492140	SLEEVE & SPOOL SET	SANDPIPER, MODEL SB 1-A TYPE SB-4-A	1.00	EA	81.12	81.12
MPP	000492165	RING, RETAINER	SANDPIPER, MODEL SB 1-A	2.00	EA	3.33	6.66
MPP	000492181	ORING	SANDPIPER, MODEL SB 1-A	6.00	EA	1.15	6.87
MPP	000492207	KIT	PILOT VALVE ASSY	4.00	EA	102.31	409.24
MPP	000492223	ORING	SANDPIPER, MODEL SB 1-A	6.00	EA	2.08	12.50
MPP	000492249	RING, SEALING	SANDPIPER MODEL SB 1-A	6.00	EA	2.97	17.81
MPP	000492264	SEAL, U CUP	SANDPIPER, MODEL SB1-A	14.00	EA	3.73	52.23
MPP	000492280	ORING	SANDPIPER, MODEL SB 1-A	8.00	EA	2.52	20.14
MPP	000492306	BUSHING	SANDPIPER, MODEL SB 1-A	4.00	EA	2.32	9.29
MPP	000492322	RING, RETAINER	SANDPIPER, MODEL SB 1-A	8.00	EA	1.55	12.40
MPP	000492348	SPRING	SANDPIPER, MODEL SB 1-A	5.00	EA	2.28	11.39
MPP	000492363	DIAPHRAGM, BUMPER	SANDPIPER, MODEL SB-1-A	8.00	EA	1.96	15.64
MPP	000492389	ACTUATOR, BUMPER	SANDPIPER MODEL SB 1-A	8.00	EA	1.40	11.20
MPP	000492405	GASKET, CHAMBER	SANDPIPER, MODEL SB 1-A	4.00	EA	1.51	6.04
MPP	000492421	GASKET, COVER	SANDPIPER, MODEL SB 1-A	4.00	EA	1.51	6.04
MPP	000492447	ROD, DIAPHRAGM	SANDPIPER, MODEL SB 1-A	3.00	EA	42.93	128.80
MPP	000492462	SEAL	U-CUP	0.00	EA	6.20	0.00
MPP	000492488	SEAL, QUAD RING	SANDPIPER, MODEL SB 1-A	4.00	EA	1.41	5.64
MPP	000492504	SHOE, SLIDING	SANDPIPER MODEL SB 1-A	2.00	EA	7.23	14.46
MPP	000492520	SPRING	SANDPIPER, MODEL SB 1-A	4.00	EA	1.51	6.04
MPP	000492546	VALVE ASSY, AIR INLET	SANDPIPER, MODEL SB 1-A	2.00	EA	0.00	0.00
MPP	000492561	VALVE ASSY, AIR DISTRIBUTION	SANDPIPER MODEL SB 1-A	2.00	EA	124.84	249.68
MPP	000492587	CLIP ASSY	SANDPIPER, MODEL SB 1-A	2.00	EA	1.51	3.02
MPP	000492603	BALL	CHECK	16.00	EA	15.11	241.69
MPP	000492629	RING, SEALING	SANDPIPER PUMP	4.00	EA	1.93	7.72
MPP	000492645	STAT-O-SEAL	SANDPIPER PUMP	2.00	EA	2.09	4.18
MPP	000492660	RELAY	METER	1.00	EA	1,197.01	1,197.01
MPP	000492686	TRANSFORMER	120V, 60HZ 8700VA	1.00	EA	813.61	813.61
MPP	000492702	CAM	OPERATOR, 120V, 60 HZ	1.00	EA	1,359.01	1,359.01
MPP	000492728	GENERATOR	TYPE TSH CLASS - 1900	1.00	EA	948.61	948.61
MPP	000492744	PACKING	PRE-FILTER	5.00	ST	62.40	312.00
MPP	000492769	ORING	PRE-FILTER	20.00	EA	72.70	1,454.01
MPP	000492785	ORING	PRE-FILTER	8.00	EA	163.43	1,307.48
MPP	000492801	ORING	PRE-FILTER	11.00	EA	104.31	1,147.43
MPP	000492827	GASKET	PRE-FILTER	12.00	EA	0.00	0.00
MPP	000492843	ORING	PRE-FILTER	7.00	EA	119.14	833.97
MPP	000492868	ELEMENT	PRE-FILTER, DWG: J219675	1.00	EA	1,293.92	1,293.92
MPP	000492884	PACKING	MAIN LUBE OIL, M-12	5.00	EA	130.00	650.00
MPP	000492900	PACKING	MAIN LUBE OIL, M-12	30.00	EA	6.42	192.59
MPP	000492926	BEARING	NEEDLE, FJ1010	20.00	EA	3.62	72.40
MPP	000492942	REPAIR KIT	ASCO	1.00	EA	86.32	86.32
MPP	000492967	WHEEL	RATCHET, M-12	1.00	EA	685.13	685.13
MPP	000492983	LEVER	AUTO, DP11688	0.00	EA	986.30	0.00
MPP	000493007	WHEEL	RATCHET, M-10	2.00	EA	787.90	1,575.80
MPP	000493023	SHAFT	MAIN FILTER	2.00	EA	633.30	1,266.59
MPP	000493049	ORING	MAIN FILTER	7.00	EA	183.61	1,285.24
MPP	000493064	BEARING	HYDRAULIC ACTUATOR	1.00	EA	37.33	37.33

NOTE: SOH - Stock on Hand

Source: DARS 3342 Report (as of 5/31/07)

Maui Electric Company, Limited

MATERIALS PHYSICAL INVENTORY
MAALAEA POWER PLANT

WH	STOCK CODE	Item	Description	SOH	Unit	Price/ Unit	Total Cost/ Item
MPP	000493080	BEARING	MAIN FILTER	8.00	EA	13.73	109.84
MPP	000493106	SPRING	MAIN FILTER	12.00	EA	24.96	299.46
MPP	000493122	PAWL	RATCHET, M-10	3.00	EA	104.15	312.45
MPP	000493148	GAUGE	DUPLEX	0.00	EA	0.00	0.00
MPP	000493163	GAUGE	DUPLEX	3.00	EA	236.08	708.24
MPP	000493189	PAWL	RATCHET, M-12, DK109580	10.00	EA	469.29	4,692.90
MPP	000493205	ORING	MAIN FILTER	29.00	EA	38.05	1,103.38
MPP	000493221	SHAFT	ROTATING	2.00	EA	1,036.39	2,072.78
MPP	000493247	ORING	MAIN FILTER	20.00	EA	21.84	436.80
MPP	000493262	SHAFT	DRIVING	4.00	EA	1,001.00	4,004.00
MPP	000493288	ORING	MAIN FILTER	20.00	EA	4.16	83.20
MPP	000493304	ORING	MAIN FILTER	4.00	EA	8.32	33.28
MPP	000493320	ORING	MAIN FILTER	12.00	EA	19.41	232.92
MPP	000493346	ORING	MAIN FILTER	12.00	EA	21.19	254.28
MPP	000493361	PIN	MAIN FILTER	8.00	EA	186.05	1,488.40
MPP	000493387	X-RING	MAIN FILTER	18.00	EA	10.54	189.74
MPP	000493403	GEAR	SPUR	8.00	EA	295.42	2,363.36
MPP	000493429	SEAL	OIL	14.00	EA	15.37	215.18
MPP	000493445	PACKING	MAIN FILTER	9.00	EA	15.14	136.24
MPP	000493460	WASHER	MAIN FILTER	4.00	EA	11.44	45.76
MPP	000493486	WASHER	MAIN FILTER	4.00	EA	8.32	33.28
MPP	000493502	PLATE	GEAR FIXING	2.00	EA	104.17	208.34
MPP	000493528	SPRING	MAIN FILTER	5.00	EA	16.64	83.20
MPP	000493544	PACKING	MAIN FILTER	10.00	EA	10.61	106.08
MPP	000493569	RACE	INNER	2.00	EA	36.46	72.92
MPP	000493585	SPRING	MAIN FILTER	3.00	EA	0.00	0.00
MPP	000493601	GEAR	INTERNAL	2.00	EA	369.79	739.58
MPP	000493627	BALL	STEEL	0.00	EA	0.00	0.00
MPP	000493643	BALL	STEEL	6.00	EA	3.12	18.72
MPP	000493668	PACKING	MAIN FILTER	13.00	EA	1.28	16.64
MPP	000493684	BEARING	BALL (NSK 6006)	8.00	EA	17.39	139.09
MPP	000493700	PACKING	MAIN FILTER	6.00	EA	11.79	70.72
MPP	000493726	KEY	PARALLEL	4.00	EA	36.46	145.84
MPP	000493742	PIN	MAIN FILTER	2.00	EA	41.67	83.34
MPP	000493767	NUT	HEX	2.00	EA	5.21	10.42
MPP	000493783	SEAL	OIL	0.00	EA	0.00	0.00
MPP	000493809	SEAL	OIL	0.00	EA	19.55	0.00
MPP	000493825	CHAIN	MAIN FILTER	2.00	EA	5.21	10.42
MPP	000493841	SEAL	OIL	3.00	EA	9.67	29.01
MPP	000493866	X-RING	MAIN FILTER	15.00	EA	11.78	176.69
MPP	000493882	PISTON	MAIN FILTER	2.00	EA	208.34	416.68
MPP	000493908	OIL SEAL	K1 STRAINER, TCV 45 62 10	2.00	EA	6.40	12.79
MPP	000493924	COUPLING	CHAIN	2.00	EA	125.00	250.00
MPP	000493940	PIN	MAIN FILTER	2.00	EA	15.63	31.26
MPP	000493965	GUIDE	PISTON	2.00	EA	151.04	302.08
MPP	000493981	TOOL	MAIN FILTER	1.00	EA	0.00	0.00
MPP	000494005	TOOL	MAIN FILTER	1.00	EA	0.00	0.00
MPP	000494021	LEVER	AUTO, DP11688	4.00	EA	151.34	605.35
MPP	000494047	BEARING	NEEDLE, FJ1010	9.00	EA	3.46	31.14
MPP	000494062	PIN	MANUAL AUTO LEVER	6.00	EA	55.14	330.83
MPP	000494088	SWITCH	DIFF. PRESSURE	2.00	EA	1,594.53	3,189.06
MPP	000494104	PIN	MAIN FILTER	2.00	EA	31.25	62.50
MPP	000494120	CLIP	JOINT	2.00	EA	15.63	31.26
MPP	000494146	BODY	VALVE	2.00	EA	250.00	500.00
MPP	000494161	VALVE	MAIN FILTER	8.00	EA	443.82	3,550.56
MPP	000494187	RACE	INNER	2.00	EA	36.46	72.92
MPP	000494203	CHANGEOVER	LEVER	2.00	EA	182.29	364.58
MPP	000494229	STOPPER	MAIN FILTER	2.00	EA	114.58	229.16
MPP	000494245	KEY	PARALLEL	2.00	EA	41.67	83.34
MPP	000494260	LEVER	CHANGEOVER	2.00	EA	166.67	333.34
MPP	000494286	FILTER	ELEMENT	1.00	EA	296.40	296.40
MPP	000494302	ELEMENT	FILTER	2.00	EA	1,370.26	2,740.52
MPP	000494328	PACKING	SAFETY VALVE	17.00	EA	0.00	0.00
MPP	000494344	BOLT & NUT	SAFETY VALVE	40.00	EA	0.00	0.00
MPP	000494369	ORING	PRIMARY PRESS CNTRL VALVE	0.00	EA	7.86	0.00
MPP	000494385	ORING	PRIMARY PRESS CNTRL VALVE	4.00	EA	5.78	23.12
MPP	000494401	ORING	PRIMARY PRESS CNTRL VALVE	4.00	EA	5.78	23.12

NOTE: SOH - Stock on Hand

Source: DARS 3342 Report (as of 5/31/07)

Maui Electric Company, Limited

MATERIALS PHYSICAL INVENTORY
MAALAEA POWER PLANT

WH	STOCK CODE	Item	Description	SOH	Unit	Price/ Unit	Total Cost/ Item
MPP	000494427	ORING	PRIMARY PRESS CNTRL VALVE	6.00	EA	12.33	73.96
MPP	000494443	SEAL	OIL, 75 X 100 X 10	4.00	EA	15.92	63.66
MPP	000494468	GASKET	FOR BEARING COVER	5.00	EA	52.08	260.41
MPP	000494484	NUT	BEARING	2.00	EA	78.00	156.00
MPP	000494500	GASKET	FOR BEARING COVER	5.00	EA	51.63	258.16
MPP	000494526	RING	CASE WEARING	2.00	EA	481.52	963.04
MPP	000494542	IMPELLER	I.C.W. PUMP, DWG. S3-7202569-1	1.00	EA	6,198.40	6,198.40
MPP	000494567	KEY	IMPELLER, DWG. 7202569-1	1.00	EA	27.75	27.75
MPP	000494583	BEARING	FLANGE (FAFNIR)	5.00	EA	159.25	796.25
MPP	000494609	KEY	COUPLING, DWG. 7202569-1	1.00	EA	16.65	16.65
MPP	000494625	JOINT	EXPANSION	2.00	EA	0.00	0.00
MPP	000494641	NUT	IMPELLER, DWG, 7202569-1	1.00	EA	166.50	166.50
MPP	000494666	BEARING	BALL, DWG. 7202569-1	2.00	EA	200.72	401.44
MPP	000494682	FLINGER	I.C.W. PUMP	1.00	EA	166.50	166.50
MPP	000494708	PACKING	SHAFT SLEEVE	4.00	EA	27.28	109.14
MPP	000494724	GASKET	SHAFT SLEEVE	6.00	EA	148.03	888.20
MPP	000494740	RELAY	OVERLOAD (THERMAL), SIZE 4 3 POLE	2.00	EA	186.29	372.57
MPP	000494765	STARTER	LINE (NON-REVERSING)	1.00	EA	4,191.14	4,191.14
MPP	000494781	COIL	I.C.W. PUMP	2.00	EA	221.03	442.06
MPP	000494807	BREAKER	3 POLE, 400 AMP, 600 VAC	0.00	EA	2,455.05	0.00
MPP	000494823	RELAY	OVERLOAD, (THERMAL), SIZE 3 3 POLE	1.00	EA	129.51	129.51
MPP	000494849	BELLOW	ICW PUMP, VITON	1.00	EA	43.55	43.55
MPP	000494864	ORING	ICW PUMP, VITON	1.00	EA	15.59	15.59
MPP	000494880	BEARING	ICW PUMP	4.00	EA	99.73	398.91
MPP	000494906	NUTS	RADIATOR FASTENERS	2.00	EA	0.00	0.00
MPP	000494922	FASTENER	RADIATOR	4.00	EA	0.00	0.00
MPP	000494948	FASTENER	RADIATOR	1.00	EA	0.00	0.00
MPP	000494963	COUPLING SPACER	DWG. ET-0758 REV. 3	0.00	EA	0.00	0.00
MPP	000494989	THOMAS COUPLING SET	AMARILLO DRIVE GEAR	3.00	ST	583.30	1,749.89
MPP	000495002	HUB	RADIATOR, SIZE 70	3.00	EA	201.12	603.36
MPP	000495028	HUB (E)	KOPFLEX BORE, 1-1/2"	1.00	EA	201.12	201.12
MPP	000495044	HUB	RADIATOR, SIZE 70	1.00	EA	0.00	0.00
MPP	000495069	ELEMENT, FLEX	ELASTOMERIC RESILIENT - E HUB	3.00	EA	373.93	1,121.80
MPP	000495085	SEAL	AIR	1.00	EA	0.00	0.00
MPP	000495101	FAN BLADES, 12'	SERIES 49, MODEL 5449/9A-B-12-A-7	13.00	EA	351.52	4,569.76
MPP	000495127	GLASS	SIGHT, OIL LEVEL	9.00	EA	2.06	18.54
MPP	000495143	GEAR UNIT	AMARILLO	2.00	EA	1,700.00	3,400.00
MPP	000495168	BEARING	HORIZONTAL, OUTER	1.00	EA	35.17	35.17
MPP	000495184	BEARING	HORIZONTAL, INNER	3.00	EA	152.19	456.56
MPP	000495200	BEARING	VERTICAL, UPPER	2.00	EA	53.25	106.50
MPP	000495226	BEARING	VERTICAL, LOWER	1.00	EA	71.51	71.51
MPP	000495242	SEAL	HORIZONTAL, OIL, 1.875 x 2.875 x .313	19.00	EA	8.22	156.24
MPP	000495267	SEAL	HORIZONTAL, OIL	17.00	EA	4.49	76.32
MPP	000495283	SEAL SET	VERTICAL	1.00	EA	10.06	10.06
MPP	000495309	GASKET SET	AMARILLO	11.00	EA	11.35	124.90
MPP	000495325	KEY	GEAR	3.00	EA	0.97	2.91
MPP	000495341	LOCKNUT SET	HORIZONTAL	2.00	EA	15.40	30.80
MPP	000495366	SPACER	VERT. ABOVE GEAR, 9/16	6.00	EA	14.32	85.94
MPP	000495382	SPACER	VERT. UNDER GEAR	4.00	EA	20.49	81.96
MPP	000495408	GEAR SET	SPIRAL BEVEL	2.00	EA	1,268.80	2,537.60
MPP	000495424	SEAL	OIL, 2.437 X 3.5 X .375	1.00	EA	12.12	12.12
MPP	000495440	SHIM SET	BEARING	11.00	EA	24.21	266.31
MPP	000495465	SEAL	VERTICAL, 3.0 X 3.751 X .437	11.00	EA	8.97	98.62
MPP	000495481	SEAL	OIL, 1.875 X 2.875 X .313	0.00	EA	0.00	0.00
MPP	000495507	BUSHING	BEARING	3.00	EA	68.43	205.28
MPP	000495523	RACE	SPRAG, OUTER	1.00	EA	233.13	233.13
MPP	000495549	SEAL	OIL	1.00	EA	11.40	11.40
MPP	000495564	RACE	SPRAGE, INNER	4.00	EA	253.51	1,014.03
MPP	000495580	GASKET	OIL LEVEL GAUGE, SIGHT GLASS	12.00	ST	2.62	31.43
MPP	000495606	SPRAG	AMARILLO GEAR	3.00	EA	181.38	544.13
MPP	000495622	ORING	VITON, AMARILLO	7.00	EA	0.75	5.28
MPP	000495648	GASKET	GEAR	79.00	EA	0.73	57.48
MPP	000495663	MOTOR	FAN, INTER COOLER	0.00	EA	5,264.64	0.00
MPP	000495689	COIL	A.C. OPERATING	1.00	EA	68.05	68.05
MPP	000495705	MOTOR	BALDOR 150 HP, 445T FR, 1780 RPM	1.00	EA	8,190.00	8,190.00
MPP	000495721	COIL	A.C. OPERATING	4.00	EA	296.29	1,185.14
MPP	000495747	COUPLING	DODGE PARA-FLEX ELEMENT	3.00	EA	79.29	237.86

NOTE: SOH - Stock on Hand

Source: DARS 3342 Report (as of 5/31/07)

Maui Electric Company, Limited

MATERIALS PHYSICAL INVENTORY
MAALAEA POWER PLANT

WH	STOCK CODE	Item	Description	SOH	Unit	Price/ Unit	Total Cost/ Item
MPP	000495762	ORING	AMARILLO	0.00	EA	0.68	0.00
MPP	000495788	COUPLING RING	PUMP TYPE: 250 DL-AM DWG. 10729 AM	22.00	EA	15.62	343.73
MPP	000495804	SEAL	ROTARY, 880E	0.00	EA	0.00	0.00
MPP	000495820	SEAL	STATIONARY	0.00	EA	0.00	0.00
MPP	000495846	SLEEVE	SHAFT	11.00	EA	407.16	4,478.80
MPP	000495861	SEAL	OIL	0.00	EA	27.54	0.00
MPP	000495887	SEAL	OIL	4.00	EA	26.38	105.52
MPP	000495903	PACKING	J.W. PUMP	16.00	EA	31.96	511.38
MPP	000495929	SEAL	ROTARY, CHESTERTON	4.00	EA	388.57	1,554.27
MPP	000495945	SEAL	STATIONARY, CHESTERTON	5.00	EA	254.12	1,270.61
MPP	000495960	SEAL	STATIONARY, CHESTERTON, 2.75", SAS-22	5.00	EA	361.15	1,805.76
MPP	000495986	KEY	IMPELLER, DWG 58-7407192	1.00	EA	27.75	27.75
MPP	000496000	SEAL	CHESTERTON, 2.75" ROTARY	5.00	EA	553.85	2,769.26
MPP	000496026	KEY	COUPLING, DWG 58-7407192	1.00	EA	16.65	16.65
MPP	000496042	BUSHING	RUBBER (T54 & T42)	16.00	EA	46.39	742.28
MPP	000496067	NUT	IMPELLER, DWG 58-7407192	1.00	EA	166.50	166.50
MPP	000496083	BEARING	BALL, DWG. 58-7407192	3.00	EA	133.45	400.34
MPP	000496109	BEARING	BALL, DWG. 58-7407192	5.00	EA	220.95	1,104.76
MPP	000496125	FLINGER	J.W. PUMP, DWG. 58-7407192	1.00	EA	166.50	166.50
MPP	000496141	RING	CASE, WEARING	1.00	EA	333.00	333.00
MPP	000496166	NUT	BEARING, DWG. 58-7407192	1.00	EA	166.50	166.50
MPP	000496182	GAUGE	OIL LEVEL, SIGHT GLASS	2.00	EA	361.44	722.87
MPP	000496208	BEARING	FAN, M-12, M-13+D3745	6.00	EA	56.93	341.60
MPP	000496224	RELAY	CONTROL (OMRON)	0.00	EA	2.00	0.00
MPP	000496240	COVER & GRID ASSY	J.W. PUMP	2.00	EA	0.00	0.00
MPP	000496265	COUPLING	FALK, STEEL FLEX, 2.375	3.00	EA	0.00	0.00
MPP	000496281	COUPLING	FALK, STEEL FLEX, 1.500	1.00	EA	0.00	0.00
MPP	000496307	BELT	FAN	5.00	EA	0.00	0.00
MPP	000496323	CONTACTOR	MAGNETIC, 5 POLE, 45 AMP, SIZE 2	2.00	EA	1,600.12	3,200.23
MPP	000496349	COIL	MAGNETIC CONTACTOR	3.00	EA	40.46	121.38
MPP	000496364	FAN	FLOW ALUM AXLE	11.00	EA	286.58	3,152.36
MPP	000496380	VENT	RADIATOR	1.00	EA	0.00	0.00
MPP	000496406	BELT	FAN	8.00	EA	0.00	0.00
MPP	000496422	BELT	FAN, 4 IN 1, 3 GROOVES	4.00	EA	88.07	352.26
MPP	000496448	COUPLING	THOMAS	1.00	EA	452.86	452.86
MPP	000496463	PAC	DISCS, 7/8", THOMAS COUPLING	12.00	EA	202.33	2,427.97
MPP	000496489	ROLLER BEARING	FLANGE, BLOCK, M-10, M-11	3.00	EA	222.52	667.55
MPP	000496505	MOUNT	RESILIENT, 1.744" O.D.	71.00	EA	100.06	7,104.37
MPP	000496521	MOUNT	RESILIENT, 1.435" O.D.	44.00	EA	73.16	3,218.83
MPP	000496547	SHEAVE	QD, MULTI-DUTY	0.00	EA	0.00	0.00
MPP	000496562	BELT	J.W. FAN, M-12, M-13	12.00	EA	13.64	163.68
MPP	000496588	ELEMENT	FLEX, W/ACCESSORIES	0.00	EA	0.00	0.00
MPP	000496604	BELT	J.W. FAN, M-12, M-13	6.00	EA	75.42	452.53
MPP	000496620	SHEAVE	WOODS, QD	3.00	EA	88.14	264.43
MPP	000496646	BUSHING	SURE GRIP, TAPERED, 1-7/8	2.00	EA	9.70	19.40
MPP	000496661	BUSHING	SURE GRIP, TAPERED, 1-11/16	5.00	EA	24.40	122.00
MPP	000496687	BUSHING	GATES, 1-5/8"	4.00	EA	16.78	67.11
MPP	000496703	JOINT	RUBBER EXPANSION, PROCO, 10" X 8"	0.00	EA	549.09	0.00
MPP	000496729	SHEAVE	V-BELT	2.00	EA	60.59	121.19
MPP	000496745	SHEAVE	V-BELT SHEAVE	2.00	EA	261.24	522.47
MPP	000496760	JOINT	EXPANSION, 3 X 7	1.00	EA	194.35	194.35
MPP	000496786	JOINT	EXPANSION, 6" X 8"	0.00	EA	445.20	0.00
MPP	000496802	JOINT	G-FLEX EXPANSION	2.00	EA	408.79	817.58
MPP	000496828	JOINT	EXPANSION, 10" PIPE	1.00	EA	538.56	538.56
MPP	000496844	EXPANSION JOINT	PROCO,(RUBBER) 6" x 6" pipe	2.00	EA	133.56	267.12
MPP	000496869	JOINT	EXPANSION, 6" PIPE	1.00	EA	190.89	190.89
MPP	000496885	PAC	DISCS, REXNORD	5.00	EA	200.16	1,000.80
MPP	000496901	BOLT	HEX J.W. PUMP	12.00	EA	5.82	69.84
MPP	000496927	WASHER	J.W. PUMP	16.00	EA	2.39	38.24
MPP	000496943	NUT	J.W. PUMP	16.00	EA	2.29	36.64
MPP	000496968	MOTOR	BALDOR, 20/5 HP, 284T, 460V RPM 1800/900	0.00	EA	1,449.67	0.00
MPP	000496984	MOTOR	BALDOR, 100 HP, 405T, 230/460V	1.00	EA	5,195.33	5,195.33
MPP	000497008	SEAL	MECHANICAL SHORT 880 M-12 SELF ALIGN	2.00	EA	142.55	285.11
MPP	000497024	SEAL	MECHANICAL SHORT 880 M-12 ROTARY	2.00	EA	216.67	433.34
MPP	000497040	ORING	F.V.C.W. PUMP	0.00	EA	17.68	0.00
MPP	000497065	ORING	F.V.C.W. PUMP	0.00	EA	38.33	0.00
MPP	000497081	ORING	F.V.C.W. PUMP	0.00	EA	28.27	0.00

NOTE: SOH - Stock on Hand

Source: DARS 3342 Report (as of 5/31/07)

Maui Electric Company, Limited

MATERIALS PHYSICAL INVENTORY
MAALAEA POWER PLANT

WH	STOCK CODE	Item	Description	SOH	Unit	Price/ Unit	Total Cost/ Item
MPP	000497104	BEARING	FVCW PUMP	4.00	EA	34.32	137.28
MPP	000497107	ORING	3 WAY MAGNET VALVE	0.00	EA	5.72	0.00
MPP	000497123	BEARING	F.V.C.W. PUMP	6.00	EA	50.86	305.16
MPP	000497149	FLINGER	F.V.C.W. PUMP	0.00	EA	12.12	0.00
MPP	000497164	BEARING	F.V.C.W. PUMP	0.00	EA	41.23	0.00
MPP	000497180	FLINGER	F.V.C.W. PUMP	0.00	EA	17.68	0.00
MPP	000497206	SEAL	MECHANICAL, SHORT 880 1-3/8 ROTARY	0.00	EA	297.46	0.00
MPP	000497222	ORING	F.V.C.W. PUMP	0.00	EA	22.88	0.00
MPP	000497248	SEAL	MECHANICAL, CHESTERTON 880 ROTARY	2.00	EA	232.08	464.16
MPP	000497263	WRENCH	BOND HUB	0.00	EA	17.95	0.00
MPP	000497289	SEAL	MECHANICAL, CHESTERTON 880 SELF ALIGN	0.00	EA	182.59	0.00
MPP	000497305	RING	LINER	0.00	EA	0.50	0.00
MPP	000497321	ORING	EBARA CORP , MODEL: 50MS III M	0.00	EA	17.70	0.00
MPP	000497347	RING	LINER	1.00	EA	36.40	36.40
MPP	000497362	PUMP	F.V.C.W. PUMP	0.00	EA	3,039.20	0.00
MPP	000497388	METAL	BEARING	2.00	EA	227.10	454.20
MPP	000497404	MOTOR	INDUCTION, 3 PHASE	0.00	EA	361.00	0.00
MPP	000497420	RING	OIL	0.00	EA	21.69	0.00
MPP	000497446	RING	SPLIT	3.00	EA	87.66	262.98
MPP	000497461	GASKET	EBARA CORP, MODEL: 50MS III M	3.00	EA	71.77	215.31
MPP	000497487	NUT	SLEEVE	0.00	EA	72.66	0.00
MPP	000497503	BOLT	LOCK	0.00	EA	1.50	0.00
MPP	000497529	HOSE	5/8"	0.00	FT	0.69	0.00
MPP	000497545	CUP	BEARING	0.00	EA	0.50	0.00
MPP	000497560	FLINGER	F.V.C.W. PUMP	5.00	EA	21.64	108.22
MPP	000497586	FLINGER	F.V.C.W. PUMP	0.00	EA	20.86	0.00
MPP	000497602	METAL	BEARING	0.00	EA	257.88	0.00
MPP	000497628	RING	OIL - BRONZE	0.00	EA	42.86	0.00
MPP	000497644	CUP	OIL - STEEL	0.00	EA	82.03	0.00
MPP	000497669	BUSH	COUPLING	22.00	EA	21.49	472.88
MPP	000497685	ORING	F.V.C.W. PUMP	0.00	EA	1.00	0.00
MPP	000497701	CONNECTOR	FLEX HOSE, 2" X 21"	3.00	EA	164.41	493.23
MPP	000497727	CONNECTOR	FLEX HOSE, 2" X 6-1/2"	2.00	EA	120.62	241.24
MPP	000497743	CONNECTOR	FLEX HOSE, 2" X 7-1/2"	2.00	EA	103.61	207.22
MPP	000497768	CONNECTOR	FLEX HOSE, 2" X 9"	3.00	EA	81.06	243.17
MPP	000497784	JOINT	EXPANSION, 3" x 6-1/2", SS FLANGED	1.00	EA	130.20	130.20
MPP	000497800	FLINGER	F.V.C.W. PUMP	0.00	EA	20.80	0.00
MPP	000497826	FLINGER	F.V.C.W. PUMP	0.00	EA	20.80	0.00
MPP	000497842	FLINGER	F.V.C.W. PUMP	0.00	EA	20.80	0.00
MPP	000497867	ORING	22.6 X 2.4	4.00	EA	0.00	0.00
MPP	000497883	ORING	TEMP. CONTROL	2.00	EA	0.00	0.00
MPP	000497909	ORING	170.7 X 5.2	2.00	EA	0.00	0.00
MPP	000497925	ORING	151 X 5.9	2.00	EA	0.00	0.00
MPP	000497941	SPRING	TEMP. CONTROL	1.00	EA	0.00	0.00
MPP	000497966	ELEMENT	WAX	4.00	EA	0.00	0.00
MPP	000497982	ELEMENT	WAX	4.00	EA	956.40	3,825.60
MPP	000498006	DIAPHRAGM	CONTROL VALVE	1.00	ST	0.00	0.00
MPP	000498022	SEAL	SHAFT	4.00	EA	24.53	98.12
MPP	000498048	SEAL	COVER, 8"	4.00	EA	18.95	75.80
MPP	000498063	ELEMENT	WAX	4.00	ST	956.40	3,825.60
MPP	000498089	SEAL	SHAFT	4.00	EA	24.52	98.08
MPP	000498105	SEAL	COVER, 10"	3.00	EA	18.95	56.85
MPP	000498121	GASKET	F.V.C.W. TANK	17.00	EA	0.00	0.00
MPP	000498147	NUTS & BOLTS	F.V.C.W. TANK	12.00	EA	0.00	0.00
MPP	000498162	GASKET	I.C.W. EXPANSION TANK	5.00	EA	0.00	0.00
MPP	000498188	NUTS & BOLTS	I.C.W. EXPANSION TANK	4.00	EA	0.00	0.00
MPP	000498204	GASKET	FILTER	1.00	EA	0.00	0.00
MPP	000498220	GASKET	FILTER	1.00	EA	0.00	0.00
MPP	000498246	PACKING	SILENCER	1.00	EA	0.00	0.00
MPP	000498261	MEDIA	FILTER - T/C 59"W X 65'L	21.00	EA	358.80	7,534.78
MPP	000498287	CHAIN	BUILDING FAN - 10 FT	4.00	EA	38.70	154.79
MPP	000498303	BELT	GATES	0.00	EA	5.17	0.00
MPP	000498329	LINK	CHAIN	6.00	EA	10.36	62.16
MPP	000498345	LAMP 120V	BLDG. VENTILATION & INTAKE AIR FILTER	2.00	EA	0.00	0.00
MPP	000498360	LINK	L/B CONN	9.00	EA	0.94	8.46
MPP	000498386	BUSH	RUBBER	2.00	EA	0.00	0.00

NOTE: SOH - Stock on Hand

Source: DARS 3342 Report (as of 5/31/07)

Maui Electric Company, Limited

MATERIALS PHYSICAL INVENTORY
MAALAEA POWER PLANT

WH	STOCK CODE	Item	Description	SOH	Unit	Price/ Unit	Total Cost/ Item
MPP	000498402	LINK	CHAIN	14.00	EA	0.80	11.19
MPP	000498428	BEARING	PILLOW BLOCK	1.00	EA	195.20	195.20
MPP	000498444	BEARING	FAFNIR PILLOW BLOCK	0.00	EA	37.65	0.00
MPP	000498469	BEARING	SPHERICAL PILLOW BLOCK	4.00	EA	176.38	705.50
MPP	000498485	BELT	FAN, M-10	3.00	EA	13.79	41.38
MPP	000498501	LIMITER	CURRENT, EL3050R , 50 AMPS	2.00	EA	210.72	421.43
MPP	000498527	SHEAVE	WOODS, QD	2.00	EA	232.42	464.84
MPP	000498543	MOTOR	AIR OVER, 15 HP, 254T FR, 1750 RPM	1.00	EA	1,161.25	1,161.25
MPP	000498568	SHEAVE	DAYCO	1.00	EA	50.28	50.28
MPP	000498584	SHEAVE	WOODS, 1-5/8"	1.00	EA	160.98	160.98
MPP	000498600	BUSHING	GATES	1.00	EA	13.86	13.86
MPP	000498626	SHEAVE	DAYCO, M-12	1.00	EA	57.67	57.67
MPP	000498642	BUSHING	DAYCO, M-12	1.00	EA	15.19	15.19
MPP	000498667	BELT	FAN, M-12	12.00	EA	7.86	94.34
MPP	000498683	PLATE	EYE	0.00	EA	0.00	0.00
MPP	000498709	CANVAS	INTAKE AIR DUCT	7.00	EA	129.75	908.23
MPP	000498725	BOLT	JOINT	3.00	EA	44.16	132.48
MPP	000498741	PACKING	STARTING AIR PIPING	6.00	EA	1.42	8.52
MPP	000498766	JOINT	PIPE	2.00	EA	0.00	0.00
MPP	000498782	PIECE	"T" STARTING AIR PIPING	4.00	EA	0.00	0.00
MPP	000498808	BOLT & NUT	STARTING AIR PIPING	20.00	EA	0.00	0.00
MPP	000498824	PACKING	STARTING AIR PIPING	0.00	EA	3.91	0.00
MPP	000498840	FLANGE	STARTING AIR PIPING	8.00	EA	0.00	0.00
MPP	000498865	PACKING	STARTING AIR PIPING	11.00	EA	0.00	0.00
MPP	000498881	THERMOMETER	L=120	2.00	EA	0.00	0.00
MPP	000498907	THERMOMETER	L=100	0.00	EA	0.00	0.00
MPP	000498923	THERMOMETER	L TYPE, L=118	0.00	EA	0.00	0.00
MPP	000498949	THERMOMETER	L TYPE, L=68, PS 3/4	0.00	EA	0.00	0.00
MPP	000498964	THERMOMETER	L TYPE, L=100, PS 3/4	0.00	EA	0.00	0.00
MPP	000498980	PACKING	THERMOMETER	0.00	EA	0.00	0.00
MPP	000499004	THERMOMETER	L=60	2.00	EA	18.72	37.44
MPP	000499020	PACKING	REMOTE THERMO INDICATOR	0.00	EA	0.00	0.00
MPP	000499046	BOSS	REMOTE THERMO INDICATOR	0.00	EA	0.00	0.00
MPP	000499061	BOSS	THERMOMETER	0.00	EA	0.00	0.00
MPP	000499087	BOSS	THERMO, SWITCH	0.00	EA	0.00	0.00
MPP	000499103	MODULE UNIT	ELECTRONIC, OIL MIST DETECTOR	0.00	EA	0.00	0.00
MPP	000499129	FUSE	OIL MIST	0.00	EA	0.00	0.00
MPP	000499145	FUSE	OIL MIST	0.00	EA	0.00	0.00
MPP	000499160	LAMP	EXCITER	0.00	EA	0.00	0.00
MPP	000499186	LAMP	OIL MIST	0.00	EA	0.00	0.00
MPP	000499202	GEARHEAD ASSY	MOTOR	0.00	EA	0.00	0.00
MPP	000499228	MODULE	SUPPRESSOR	0.00	EA	0.00	0.00
MPP	000499244	FUSE	OFF, 1.0A, DELAYED	20.00	EA	0.00	0.00
MPP	000499269	FILTER	OFF BRONZE AIR	52.00	EA	6.25	325.04
MPP	000499285	FUSE	OIL MIST, 500V-20 AMPS	16.00	EA	0.00	0.00
MPP	000499301	CIRCLIP (LOCKWASHER)	FRESH AIR FILTER	27.00	EA	2.19	59.02
MPP	000499327	BELLOWS	OFF - FLEXIBLE	8.00	EA	10.31	82.45
MPP	000499343	MODULE	ELECTRONIC, VISITRON	0.00	EA	4,211.55	0.00
MPP	000499368	DISPLAY	REMOTE, TYPE VN-240	1.00	EA	2,463.41	2,463.41
MPP	000499384	BOX	SERVICE	0.00	EA	293.00	0.00
MPP	000499400	PLATE	FRONT	1.00	EA	87.84	87.84
MPP	000499426	GASKET	OIL MIST	5.00	EA	14.52	72.60
MPP	000499442	GASKET	FLOW METER	2.00	EA	0.00	0.00
MPP	000499467	GASKET	FLOW METER	2.00	EA	0.00	0.00
MPP	000499483	TOKICO FLOW METER PARTS	#8 GEAR ASSY & #10 CASE ASST	1.00	EA	2,576.08	2,576.08
MPP	000499509	BEARING	FLOW METER	2.00	EA	50.00	100.00
MPP	000499525	BEARING	FLOW METER	6.00	EA	0.00	0.00
MPP	000499541	PANE	FLOW METER	2.00	EA	0.00	0.00
MPP	000499566	BLOWER ASSY	AIR PURGE	0.00	EA	722.28	0.00
MPP	000499582	ABSORBER	AIR	8.00	EA	26.22	209.76
MPP	000499608	FILTER	AIR, JOHN DEERE	8.00	EA	15.38	123.05
MPP	000499624	WASHER	LOCK	11.00	EA	4.19	46.09
MPP	000499640	ABSORBER	OPACITY MONITOR BLOWER	0.00	EA	0.00	0.00
MPP	000499665	CHART	YOKOGAWA	0.00	EA	3.48	0.00
MPP	000499681	ELEMENT	FILTER, MODEL E100-75-C	5.00	EA	117.06	585.30
MPP	000499707	CARTRIDGE, PEN, RED (3/PACK)	(CEMS)	29.00	PK	12.07	350.11
MPP	000499723	CARTRIDGE	PEN - GREEN	9.00	PK	13.43	120.91

NOTE: SOH - Stock on Hand

Source: DARS 3342 Report (as of 5/31/07)

Maui Electric Company, Limited

MATERIALS PHYSICAL INVENTORY
MAALAEA POWER PLANT

WH	STOCK CODE	Item	Description	SOH	Unit	Price/ Unit	Total Cost/ Item
MPP	000499749	CARTRIDGE	PEN - BLUE	4.00	PK	14.02	56.10
MPP	000499764	CARTRIDGE	PEN - PURPLE	9.00	EA	11.49	103.38
MPP	000499780	SEAL	OIL, HYDRAULIC ACTUATOR	2.00	EA	0.00	0.00
MPP	000499806	SEAL	OIL, HYDRAULIC ACTUATOR	4.00	EA	0.00	0.00
MPP	000499822	ORING	HYDRAULIC ACTUATOR	6.00	EA	0.00	0.00
MPP	000499848	ORING	HYDRAULIC ACTUATOR	2.00	EA	0.00	0.00
MPP	000499863	ORING	HYDRAULIC ACTUATOR	2.00	EA	0.00	0.00
MPP	000499889	ORING	HYDRAULIC ACTUATOR	6.00	EA	1.00	6.00
MPP	000499905	ORING	HYDRAULIC ACTUATOR	2.00	EA	0.00	0.00
MPP	000499921	ORING	HYDRAULIC ACTUATOR	2.00	EA	0.00	0.00
MPP	000499947	PACKING	HYDRAULIC ACTUATOR	4.00	EA	0.00	0.00
MPP	000499962	PACKING	HYDRAULIC ACTUATOR	4.00	EA	0.00	0.00
MPP	000499988	PACKING	HYDRAULIC ACTUATOR	2.00	EA	0.00	0.00
MPP	000500009	ORING	HYDRAULIC ACTUATOR	2.00	EA	0.00	0.00
MPP	000500025	PACKING	HYDRAULIC ACTUATOR	2.00	EA	0.00	0.00
MPP	000500041	PACKING	HYDRAULIC ACTUATOR	2.00	EA	0.00	0.00
MPP	000500066	PACKING	HYDRAULIC ACTUATOR	2.00	EA	0.00	0.00
MPP	000500082	PACKING	HYDRAULIC ACTUATOR	2.00	EA	0.00	0.00
MPP	000500102	BEARING, FAN, DWG. #DK109586 #29	FOR TANABE AIR COMPRESSOR.	2.00	EA	0.00	0.00
MPP	000500108	LUBRICATOR	CYLINDER	1.00	EA	0.00	0.00
MPP	000500124	BELT	DAYCO	3.00	EA	16.31	48.93
MPP	000500140	ROD	CONNECTING	2.00	EA	3,009.72	6,019.44
MPP	000500165	PIN	PISTON, 4Y6925-E	2.00	EA	308.33	616.66
MPP	000500181	BUSHING	PISTON PIN, 4Y51100-E	0.00	EA	0.00	0.00
MPP	000500207	SET SCREW	PISTON PIN, 4Y51100-E	4.00	EA	23.13	92.52
MPP	000500223	CYLINDER	TANABE AIR COMPRESSOR, 4Y6925-E	1.00	EA	21,745.30	21,745.30
MPP	000500249	HEAD	CYLINDER, 4Y6925-E	0.00	EA	5,171.52	0.00
MPP	000500264	VALVE SEAT	SUCTION	0.00	EA	0.00	0.00
MPP	000500280	PLATE	SUCTION VALVE	0.00	EA	0.00	0.00
MPP	000500306	BOLT	CLAMPING VALVE	0.00	EA	0.00	0.00
MPP	000500322	SPRING	SUCTION VALVE	0.00	EA	0.00	0.00
MPP	000500348	SPRING	DELIVERY VALVE	0.00	EA	0.00	0.00
MPP	000500363	SEAT	DELIVERY VALVE	0.00	EA	0.00	0.00
MPP	000500389	PIN	KNOCK	0.00	EA	0.00	0.00
MPP	000500405	ORING	VALVE SEAT	0.00	EA	0.00	0.00
MPP	000500421	CAP	SPRING RETAINER	2.00	EA	61.67	123.34
MPP	000500447	COVER	BEARING (FRONT)	1.00	EA	0.00	0.00
MPP	000500462	ACTUATOR	WOODWARD - EGB-10	1.00	EA	2,751.95	2,751.95
MPP	000500462	ACTUATOR	WOODWARD - EGB-10	1.00	EA	2,751.95	2,751.95
MPP	000500488	SEAL	WOODWARD - EGB-10	2.00	EA	140.66	281.32
MPP	000500504	ORING	WOODWARD - EGB-10	2.00	EA	9.10	18.20
MPP	000500520	PACKING	WOODWARD - EGB-10	2.00	EA	0.00	0.00
MPP	000500546	MOTOR, GROSCHOPP	SPEED CONTROL, 125VDC	7.00	EA	943.76	6,606.30
MPP	000500561	PACKING	WOODWARD - EGB-10	2.00	EA	0.00	0.00
MPP	000500587	POTENTIOMETER	MOTOR OPERATED	0.00	EA	0.00	0.00
MPP	000500603	PIN	STRAIGHT	1.00	EA	507.78	507.78
MPP	000500629	PACKING	WOODWARD - EGB-10	2.00	EA	12.00	24.00
MPP	000500645	PACKING	WOODWARD - EGB-10	2.00	EA	0.00	0.00
MPP	000500660	SEAL	WOODWARD - EGB-10	0.00	EA	0.00	0.00
MPP	000500686	SEAL	WOODWARD - EGB-10	2.00	EA	14.33	28.66
MPP	000500702	SEAL	WIPER	0.00	EA	0.00	0.00
MPP	000500728	SEAL	WOODWARD - EGB-10	3.00	EA	12.29	36.87
MPP	000500744	PIN	COTTER	2.00	EA	0.14	0.28
MPP	000500769	GASKET	WOODWARD - EGB-10	5.00	EA	5.16	25.80
MPP	000500785	GASKET	WOODWARD - EGB-10	2.00	EA	0.00	0.00
MPP	000500801	GASKET	WOODWARD - EGB-10	2.00	EA	0.00	0.00
MPP	000500827	RING	GLYD	10.00	EA	2.78	27.80
MPP	000500843	ORING	WOODWARD - EGB-10	10.00	EA	3.12	31.20
MPP	000500868	VALVE ASSY	CHECK	18.00	EA	5.54	99.72
MPP	000500884	ORING	WOODWARD - EGB-10	6.00	EA	0.26	1.56
MPP	000500900	GASKET	WOODWARD - EGB-10	31.00	EA	12.61	390.91
MPP	000500926	WASHER	5/16", WOODWARD - EGB-10	18.00	EA	0.16	2.88
MPP	000500942	SEAL	GOV. TWO STAGE BOOSTER	4.00	EA	0.00	0.00
MPP	000500967	PACKING	GOV. TWO STAGE BOOSTER	2.00	EA	0.00	0.00
MPP	000500983	CONNECTOR	FLEXIBLE METAL HOSE, 3/8" UNION	0.00	EA	92.75	0.00
MPP	000501007	BOOSTER	WOODWARD - EGB-10	1.00	EA	650.00	650.00
MPP	000501023	VALVE SET	TANABE AIR COMPRESSOR 4Y6925-E	0.00	EA	46.25	0.00

NOTE: SOH - Stock on Hand

Source: DARS 3342 Report (as of 5/31/07)

Maui Electric Company, Limited

MATERIALS PHYSICAL INVENTORY
MAALAEA POWER PLANT

WH	STOCK CODE	Item	Description	SOH	Unit	Price/ Unit	Total Cost/ Item
MPP	000501049	SPRING RETAINER	VALVE SET	2.00	EA	308.33	616.66
MPP	000501064	SPRING	VALVE SET	2.00	EA	23.13	46.26
MPP	000501080	VALVE	CHECK	2.00	EA	2,627.04	5,254.08
MPP	000501106	BEARING	SEALED	2.00	EA	15.40	30.80
MPP	000501110	OIL SEAL	HYDRAULIC AMPLIFIER	2.00	EA	0.00	0.00
MPP	000501113	OIL SEAL	HYDRAULIC AMPLIFIER	2.00	EA	0.00	0.00
MPP	000501122	GASKET	DK109586	2.00	EA	14.65	29.30
MPP	000501148	RETAINER	DK109586	4.00	EA	144.41	577.64
MPP	000501163	GASKET	DK109586	4.00	EA	17.73	70.90
MPP	000501189	SPRING	DK109586	4.00	EA	48.74	194.96
MPP	000501205	SLEEVE	DK109586	7.00	EA	440.79	3,085.50
MPP	000501221	DISC	VALVE SEAT	4.00	EA	45.53	182.10
MPP	000501247	GASKET	DK109586	3.00	EA	19.78	59.33
MPP	000501262	BOLT & NUT	DK109586	2.00	EA	34.69	69.38
MPP	000501288	HOLDER	DISC	3.00	EA	77.64	232.93
MPP	000501304	VALVE	DK109586	3.00	EA	415.28	1,245.85
MPP	000501320	SEAT	VALVE	3.00	EA	179.10	537.31
MPP	000501346	RING	LP PISTON	16.00	EA	59.69	954.98
MPP	000501361	AFTERCOOLER	TANABE AIR COMPRESSOR, 4Y6925-E	0.00	EA	3,784.68	0.00
MPP	000501387	GASKET	LP VALVE SEAT (OUTSIDE)	4.00	EA	51.64	206.57
MPP	000501403	PISTON	TANABE AIR COMPRESSOR, 4Y6925-E	3.00	EA	2,130.82	6,392.45
MPP	000501429	RING	HP PISTON	12.00	EA	46.61	559.29
MPP	000501445	RING	OIL SCRAPER	11.00	EA	84.92	934.12
MPP	000501460	GASKET	BEARING (FRONT)	6.00	EA	210.22	1,261.32
MPP	000501486	MOTOR	AIR COMPRESSOR	0.00	EA	0.00	0.00
MPP	000501502	SEAL	OIL	2.00	EA	38.09	76.18
MPP	000501528	GASKET	CYLINDER HEAD	4.00	EA	49.00	196.00
MPP	000501544	BELT	TANABE AIR COMPRESSOR, 4Y6925-E	4.00	EA	49.85	199.40
MPP	000501569	GASKET	CRANKCASE	3.00	EA	13.31	39.93
MPP	000501585	GASKET	SIDE COVER	1.00	EA	0.00	0.00
MPP	000501601	VALVE SET	COVER	4.00	EA	618.40	2,473.60
MPP	000501627	BOLT & NUT	VALVE CLAMPING	4.00	EA	464.23	1,856.92
MPP	000501643	FAN BELT	DK109586 ITEM 30	2.00	EA	4.00	8.00
MPP	000501668	VALVE	HP DELIVERY - COMP	2.00	EA	674.96	1,349.92
MPP	000501684	GASKET	VALVE SEAT, SUCTION & DELIVERY	12.00	EA	44.05	528.56
MPP	000501700	VALVE	HP SUCTION	2.00	EA	0.00	0.00
MPP	000501726	VALVE SEAT	SUCTION	0.00	EA	697.22	0.00
MPP	000501742	VALVE	LP SUCTION & DELIVERY (COMPLETE)	2.00	EA	0.00	0.00
MPP	000501767	ORING	VALVE SEAT (INSIDE)	11.00	EA	57.02	627.22
MPP	000501783	VALVE SEAT	DELIVERY	0.00	EA	697.22	0.00
MPP	000501809	ORING	HP VALVE FLANGE	8.00	EA	26.21	209.65
MPP	000501825	GAUGE	PRESSURE (HIGH, LOW, OIL)	3.00	EA	0.00	0.00
MPP	000501841	ORING	VALVE SEAT COVER	4.00	EA	35.79	143.16
MPP	000501866	PLATE	VALVE	4.00	EA	136.43	545.72
MPP	000501882	ORING	LP VALVE SEAT	11.00	EA	57.93	637.23
MPP	000501908	BEARING	MAIN	5.00	EA	396.63	1,983.15
MPP	000501924	GASKET	LP VALVE SEAT	4.00	EA	36.51	146.04
MPP	000501940	SPRING	VALVE	4.00	EA	31.20	124.80
MPP	000501965	GASKET	HP SUCTION & DELIVERY VALVE	3.00	EA	35.36	106.08
MPP	000501981	BEARING	CONN ROD	4.00	EA	449.67	1,798.68
MPP	000502005	SHAFT	COOLING FAN	1.00	EA	94.18	94.18
MPP	000502021	O-RING	PISTON PIN "VITON"	11.00	EA	26.76	294.36
MPP	000502047	GASKET	SUCTION STRAINER	7.00	EA	15.52	108.64
MPP	000502062	FAN PULLEY	DWG. DK 109586	2.00	EA	2,310.37	4,620.74
MPP	000502088	DISC	HP VALVE MAGNETIC UNLDR VALVE-SOLENOID	1.00	EA	79.18	79.18
MPP	000502104	ORING	MAGNETIC UNLOADER VALVE - SOLENOID	6.00	EA	42.05	252.30
MPP	000502120	ORING	MAGNETIC UNLOADER VALVE - SOLENOID	5.00	EA	20.65	103.25
MPP	000502146	ORING	MAGNETIC UNLOADER VALVE - SOLENOID	0.00	EA	11.44	0.00
MPP	000502161	DISC	LP VALVE - MAGNETIC UNLDR VALVE-SOLENOID	1.00	EA	73.95	73.95
MPP	000502187	GUARD	VALVE - SUCTION	0.00	EA	0.00	0.00
MPP	000502203	SPRING	MAGNETIC UNLOADER VALVE - SOLENOID	0.00	EA	14.91	0.00
MPP	000502229	GUARD	VALVE - DELIVERY	0.00	EA	0.00	0.00
MPP	000502245	COVER	BEARING (REAR)	1.00	EA	1,622.22	1,622.22
MPP	000502260	VALVE	UNLOADER - COMPLETE	1.00	EA	2,759.09	2,759.09
MPP	000502286	MOTOR	5 HP, T215 FRAME,	1.00	EA	466.01	466.01

NOTE: SOH - Stock on Hand

Source: DARS 3342 Report (as of 5/31/07)

Maui Electric Company, Limited

MATERIALS PHYSICAL INVENTORY
MAALAEA POWER PLANT

WH	STOCK CODE	Item	Description	SOH	Unit	Price/ Unit	Total Cost/ Item
MPP	000502302	HEATER	ELECTRIC - CYLINDER COVER	7.00	EA	700.15	4,901.06
MPP	000502328	VARISTOR	ELECTRIC	7.00	EA	0.00	0.00
MPP	000502344	HEATER	ELECTRIC	1.00	EA	0.00	0.00
MPP	000502369	HEATER	ELECTRIC	12.00	EA	10.86	130.32
MPP	000502385	HEATER	ELECTRIC	6.00	EA	0.00	0.00
MPP	000502401	HEATER	ELECTRIC	12.00	EA	0.00	0.00
MPP	000502427	HEATER	ELECTRIC	6.00	EA	35.24	211.45
MPP	000502443	HEATER	ELECTRIC	0.00	EA	0.00	0.00
MPP	000502468	HEATER	ELECTRIC	6.00	EA	4.88	29.28
MPP	000502484	HEATER	CUTLER HAMMER	3.00	EA	11.84	35.52
MPP	000502500	HEATER	ELECTRIC	10.00	EA	5.12	51.20
MPP	000502526	HEATER	ELECTRIC	9.00	EA	0.00	0.00
MPP	000502542	HEATER	ELECTRIC	24.00	EA	0.00	0.00
MPP	000502567	HEATER	ELECTRIC	12.00	EA	0.00	0.00
MPP	000502583	HEATER	ELECTRIC	12.00	EA	4.12	49.44
MPP	000502609	HEATER	ELECTRIC	3.00	EA	3.96	11.88
MPP	000502625	HEATER	ELECTRIC	7.00	EA	3.86	27.02
MPP	000502641	HEATER	ELECTRIC	3.00	EA	0.00	0.00
MPP	000502666	HEATER	ELECTRIC	0.00	EA	0.00	0.00
MPP	000502682	HEATER	ELECTRIC	6.00	EA	6.25	37.50
MPP	000502708	HEATER	ELECTRIC	3.00	EA	3.65	10.95
MPP	000502724	BALLAST	ADVANCE LIGHTS	3.00	EA	183.37	550.12
MPP	000502740	MECHANISM ASSY	SWITCHING	2.00	EA	119.42	238.84
MPP	000502765	ANNUNCIATOR	POWER SUPPLY	1.00	EA	875.00	875.00
MPP	000502781	SWITCH	SNAP	2.00	EA	50.00	99.99
MPP	000502807	SWITCH	MAGNETROL	1.00	EA	105.94	105.94
MPP	000502823	SWITCH	MAGNETROL	2.00	EA	138.73	277.46
MPP	000502849	SWITCH	MAGNETROL	1.00	EA	216.28	216.28
MPP	000502864	SYNCHROSCOPE	ELECTRICAL	0.00	EA	0.00	0.00
MPP	000502880	PLUG	MODEL M72 - CYL COVER BOLT HEATER	1.00	EA	0.00	0.00
MPP	000502906	LAMP	CYL COVER BOLT HEATER	4.00	EA	0.00	0.00
MPP	000502922	FUSE	CYL COVER BOLT HEATER	10.00	EA	5.00	50.00
MPP	000502948	GLOBE	RED, APN-118W	1.00	EA	0.00	0.00
MPP	000502963	CARD	LOGIC, 125VDC, FCV, A	1.00	EA	228.80	228.80
MPP	000502989	LIMITER	CURRENT - CYL BOLT HEATER	1.00	EA	599.12	599.12
MPP	000503003	CARD	LOGIC, 125VDC, FCV, AFL	2.00	EA	390.00	780.00
MPP	000503029	GLOBE	WHITE, APN-118W	1.00	EA	0.00	0.00
MPP	000503045	FUSE	BUSS	8.00	EA	9.48	75.84
MPP	000503060	CARD	LOGIC, 125VDC, FCV, AFM	1.00	EA	228.80	228.80
MPP	000503086	SYSTEM	EXCITATION SUPPORT	1.00	EA	1,791.92	1,791.92
MPP	000503102	TRANSFORMER	EXCITATION SUPPORT	1.00	EA	747.50	747.50
MPP	000503128	POTENTIOMETER	CONTROL	0.00	EA	75.00	0.00
MPP	000503144	CAPACITOR	EXCITATION SUPPORT	6.00	EA	16.64	99.84
MPP	000503169	REGULATOR	VOLTAGE - AUTO, BASLER	2.00	EA	886.66	1,773.32
MPP	000503185	REACTOR	BASLER	2.00	EA	199.24	398.49
MPP	000503201	TRANSFORMER	SENSING	1.00	EA	119.08	119.08
MPP	000503227	ARRESTOR	SURGE	1.00	EA	149.76	149.76
MPP	000503243	RESISTOR	SBO	2.00	EA	21.32	42.64
MPP	000503268	RHEOSTATE	VOLTAGE ADJUST	2.00	EA	22.88	45.76
MPP	000503284	RELAY	INTERFACE PCB, BETA	3.00	EA	509.60	1,528.80
MPP	000503300	DIODE	REVERSING - EXCITER	4.00	EA	217.84	871.36
MPP	000503326	DIODE	FORWARD - EXCITER	7.00	EA	217.84	1,524.88
MPP	000503342	FUSE	GOULD - BRUSHLESS EXCITER	12.00	EA	11.24	134.88
MPP	000503367	THERMOMETER, ASHCROFT 5" Face	4' stem every angle, 0 - 250 degree	1.00	EA	96.71	96.71
MPP	000503383	THERMOMETER	ASHCROFT, 250 F; 2.5" STEM	8.00	EA	118.39	947.12
MPP	000503409	RECORD ROLL	GE/AC, RECORDING WATTMETER	0.00	EA	10.15	0.00
MPP	000503425	MOTOR	SYNC. CHART DRIVE	1.00	EA	402.48	402.48
MPP	000503441	LAMP	SIGNAL - E TYPE	5.00	EA	181.78	908.90
MPP	000503466	LAMP	EDISON	13.00	EA	201.04	2,613.52
MPP	000503482	LAMP	PILOT	3.00	EA	228.80	686.40
MPP	000503508	REPLACEMENT KIT	HID BALLAST	4.00	EA	281.93	1,127.72
MPP	000503524	BEARING	SHIELD BALL	0.00	EA	75.49	0.00
MPP	000503540	BEARING	SHIELD BALL	0.00	EA	57.10	0.00
MPP	000503565	BEARING	SHIELD BALL	1.00	EA	6.36	6.36
MPP	000503581	BEARING	SHIELD BALL	1.00	EA	5.14	5.14
MPP	000503607	BEARING	SHIELD BALL	1.00	EA	4.00	4.00
MPP	000503623	BEARING	BALL - COUPLING SIDE	2.00	EA	25.32	50.64

NOTE: SOH - Stock on Hand

Source: DARS 3342 Report (as of 5/31/07)

Maui Electric Company, Limited

MATERIALS PHYSICAL INVENTORY
MAALAEA POWER PLANT

WH	STOCK CODE	Item	Description	SOH	Unit	Price/ Unit	Total Cost/ Item
MPP	000503649	TRANSFORMER	CONTROL	2.00	EA	147.32	294.63
MPP	000503664	RELAY	CONTROL, 4 POLE	4.00	EA	161.70	646.78
MPP	000503680	COIL	D.C. - CONTROL RELAY	1.00	EA	36.40	36.40
MPP	000503706	CONTROLLER	INDICATING	2.00	EA	470.68	941.36
MPP	000503722	THERMAL ASSY	ELECTRICAL	1.00	EA	478.09	478.09
MPP	000503748	SWITCH	TEMPERATURE, 90-200 DEGREES F	2.00	EA	584.31	1,168.62
MPP	000503763	RECORDER	OMEGA	0.00	EA	4,726.36	0.00
MPP	000503789	CHART	CONTROL PANEL	0.00	EA	11.34	0.00
MPP	000503805	PAD	24PT, 250 SERIES	19.00	EA	40.93	777.59
MPP	000503821	INK	RECORDING CHART	0.00	EA	28.06	0.00
MPP	000503847	COIL	MAGNET VALVE, 2 WAY	2.00	EA	60.00	120.00
MPP	000503862	SOLENOID	3 WAY MAGNET VALVE	2.00	EA	328.50	657.00
MPP	000503888	SPRING	3-WAY MAGNET VALVE	2.00	EA	0.00	0.00
MPP	000503904	FUSE	EMERGENCY BREAKDOWN	10.00	EA	0.00	0.00
MPP	000503920	OIL SEAL	SINGLE ACTING CYLINDER	2.00	EA	39.31	78.62
MPP	000503946	MAGNET	HI SPEED TACHOMETER	3.00	EA	184.08	552.24
MPP	000503961	PACKING	SINGLE ACTING CYLINDER	0.00	EA	44.71	0.00
MPP	000503987	PICK UP	T/C HIGH SPEED TACHOMETER	6.00	ST	307.52	1,845.10
MPP	000504001	CHART	RECORDING - EXH GAS PYROMETER	0.00	EA	17.98	0.00
MPP	000504027	INK SET	EXH, GAS PYROMETER	0.00	EA	0.00	0.00
MPP	000504043	INK SET	EXH, GAS PYROMETER	0.00	EA	148.35	0.00
MPP	000504068	ORING	EXH, GAS PYROMETER	18.00	PK	1.60	28.82
MPP	000504084	COIL	SOLENOID VALVE	2.00	EA	51.19	102.39
MPP	000504100	INKWELL	RED - CH RECORDING MEDIUM DRYING	0.00	EA	75.32	0.00
MPP	000504126	VALVE SCREW	VALVE SEAT	9.00	EA	60.67	546.03
MPP	000504142	VALVE SEAT	ENG. SHUTDOWN EMERGENCY	0.00	EA	16.40	0.00
MPP	000504167	ORING	ENG. SHUTDOWN EMERGENCY	38.00	EA	1.59	60.50
MPP	000504183	CLEANER	CH RECORDING PEN	0.00	EA	64.91	0.00
MPP	000504209	ORING	ENG. SHUTDOWN EMERGENCY	24.00	EA	2.40	57.55
MPP	000504225	PACKING	ENG. SHUTDOWN EMERGENCY	17.00	EA	11.44	194.55
MPP	000504241	PACKING	ENG. SHUTDOWN EMERGENCY	15.00	EA	5.76	86.34
MPP	000504266	ORING	ENG. SHUTDOWN EMERGENCY	41.00	EA	1.47	60.32
MPP	000504282	VALVE SEAT	ENG. SHUTDOWN EMERGENCY	9.00	EA	102.10	918.94
MPP	000504308	PACKING	ENG. STOPPING DEVICE	10.00	EA	5.72	57.20
MPP	000504324	PACKING	ENG. STOPPING DEVICE	15.00	EA	6.14	92.04
MPP	000504340	ORING	ENG. STOPPING DEVICE	10.00	EA	5.72	57.20
MPP	000504365	ORING	ENG. STOPPING DEVICE	10.00	EA	5.72	57.20
MPP	000504381	REPAIR KIT, O RING	STOP CYLINDER, SINGLE ACTING CYLINDER	6.00	ST	6.24	37.44
MPP	000504407	ORING	STOP CYLINDER	14.00	EA	1.06	14.77
MPP	000504423	PISTON	STOP CYLINDER	3.00	EA	157.38	472.14
MPP	000504449	ORING	ENG. STOPPING DEVICE	10.00	EA	5.72	57.20
MPP	000504464	ORING	STARTING DEVICE	41.00	EA	0.77	31.60
MPP	000504480	VALVE SEAT	STARTING DEVICE	0.00	EA	0.00	0.00
MPP	000504506	ORING	STARTING DEVICE	48.00	EA	1.16	55.50
MPP	000504522	ORING	STARTING DEVICE	0.00	EA	0.00	0.00
MPP	000504548	ORING	STARTING DEVICE	0.00	EA	4.69	0.00
MPP	000504563	PACKING	STARTING DEVICE	0.00	EA	0.00	0.00
MPP	000504589	PACKING	STARTING DEVICE	0.00	EA	0.00	0.00
MPP	000504605	ORING	STARTING DEVICE	0.00	EA	0.00	0.00
MPP	000504621	SWITCH	SELECTOR	1.00	EA	0.00	0.00
MPP	000504647	RELAY	100VDC OCTAL BASE, 10 AMP, DPDT	4.00	EA	14.27	57.06
MPP	000504662	RIBBON	GENICOM PRINTER - BAILEY	6.00	EA	1.34	8.04
MPP	000504688	CHART	CH RECORDING PEN, 330066A	0.00	EA	9.83	0.00
MPP	000504704	PAD	INK W/12 PTS, 329611	8.00	EA	105.99	847.92
MPP	000504720	FAN	MUFFIN, XL-LC, MX2B3	3.00	EA	41.93	125.79
MPP	000504746	CORD	FAN, TYPE 07100-24	2.00	EA	3.53	7.06
MPP	000504761	GUARD	FAN, TYPE 08128	6.00	EA	5.27	31.62
MPP	000504787	SWITCH	CHANGE OVER, SPL-33105-2	2.00	EA	265.94	531.88
MPP	000504803	SWITCH	CONTROL, SPL 33105-2	2.00	EA	558.65	1,117.30
MPP	000504829	TIMER	OMRON, 24V 8 PIN, H3CA-8H	4.00	EA	127.92	511.68
MPP	000504845	FLOAT	FLOAT SWITCH	2.00	EA	44.13	88.26
MPP	000504860	SWITCH	ELECTRO, SPL-33105-2	1.00	EA	156.51	156.51
MPP	000504886	SWITCH	PRESSURE (HIGH, LOW, OIL)	1.00	EA	334.22	334.22
MPP	000504902	THERMOSTAT	CONTROL PANEL	2.00	EA	0.00	0.00
MPP	000504928	SWITCH	PRESSURE, W-NS-307-5-2	6.00	EA	250.60	1,503.57
MPP	000504944	SWITCH	VIBRATION	1.00	EA	0.00	0.00
MPP	000504969	SWITCH	PRESSURE	1.00	EA	0.00	0.00

NOTE: SOH - Stock on Hand

Source: DARS 3342 Report (as of 5/31/07)

Maui Electric Company, Limited

MATERIALS PHYSICAL INVENTORY
MAALAEA POWER PLANT

WH	STOCK CODE	Item	Description	SOH	Unit	Price/ Unit	Total Cost/ Item
MPP	000504985	RELAY	CONTROL, TYPE PL11	0.00	EA	6.88	0.00
MPP	000505008	SWITCH	PRESSURE	4.00	EA	128.96	515.84
MPP	000505024	CONTROL CARD	BETA ANNUNCIATOR	1.00	EA	332.80	332.80
MPP	000505040	THERMOCOUPLE	PYROMETER	7.00	ST	467.94	3,275.59
MPP	000505065	WIRE	THERMOCOUPLE	0.00	EA	0.82	0.00
MPP	000505081	INDICATOR	INLET TEMP	2.00	EA	2,360.80	4,721.60
MPP	000505107	PAX Thermocouple & RTD Input		0.00	EA	70.92	0.00
MPP	000505123	RESISTANCE BULB	RESIOPAK CERAMIC INSULATED	8.00	EA	545.19	4,361.51
MPP	000505149	INDICATOR METER	FACE TEMPERATURE - (FAHRENHEIT)	6.00	EA	2,267.86	13,607.18
MPP	000505164	METER RELAY (RLR-120)	TACHOMETER	4.00	EA	2,052.57	8,210.29
MPP	000505180	RECEIVER	ELECTRIC TACHO, DWG. 05-339A-1	1.00	EA	970.77	970.77
MPP	000505206	LIMITER	CURRENT - LA TRIP PAC	0.00	EA	137.28	0.00
MPP	000505222	TRIP	LA TRIP PAC	0.00	EA	757.28	0.00
MPP	000505248	RELAY	TACHOMETER - SPEED SWITCH	0.00	EA	2,054.00	0.00
MPP	000505263	CAPACITOR	CONTROL PANEL, 2300MFD, 75WVDC	3.00	EA	11.47	34.41
MPP	000505289	SWITCH	RESET-TEST	2.00	EA	653.15	1,306.31
MPP	000505305	SWITCH	STOP-START	3.00	EA	182.00	546.00
MPP	000505321	SWITCH	NOR-MAINT	1.00	EA	865.70	865.70
MPP	000505347	SWITCH	START - STOP	1.00	EA	218.40	218.40
MPP	000505362	RELAY	CONTROL, 120 VDC	2.00	EA	78.00	156.00
MPP	000505388	RELAY	CONTROL, 24 VDC	11.00	EA	78.00	858.00
MPP	000505404	RELAY	TIME	1.00	EA	234.00	234.00
MPP	000505420	RELAY	TIME, 24 VDC	1.00	EA	353.60	353.60
MPP	000505446	PLUG	TIME RELAY, 24 VDC	1.00	EA	439.30	439.30
MPP	000505461	PLUG	TIME RELAY, 48 VDC	2.00	EA	180.11	360.23
MPP	000505487	PLUG	TIME RELAY, 125 VDC	1.00	EA	92.70	92.70
MPP	000505503	DRIVING AMP	BUZZER	3.00	EA	79.56	238.68
MPP	000505529	MODULE	FLICKER	3.00	EA	82.96	248.88
MPP	000505545	MAGNET & COIL	SWITCHGEAR	1.00	EA	114.48	114.48
MPP	000505560	SWITCH	SWITCHGEAR	1.00	EA	69.89	69.89
MPP	000505586	SWITCH	SWITCHGEAR	1.00	EA	69.89	69.89
MPP	000505602	CONTACT	SWITCHGEAR	3.00	EA	159.74	479.22
MPP	000505628	CONTACT	FINGER	1.00	EA	0.00	0.00
MPP	000505644	CONTACT	FINGER	6.00	EA	117.76	706.56
MPP	000505669	PAD	CONTACT	3.00	EA	5.99	17.97
MPP	000505685	SPRING	SWITCHGEAR	3.00	EA	5.32	15.96
MPP	000505701	FUSE	SWITCHGEAR	1.00	EA	39.94	39.94
MPP	000505727	CONTACT	MAIN	1.00	EA	114.48	114.48
MPP	000505743	COIL	SWITCHGEAR	2.00	EA	31.95	63.90
MPP	000505768	RELAY	CONTROL	0.00	EA	98.24	0.00
MPP	000505784	REPAIR KIT	SWITCHING	0.00	EA	195.84	0.00
MPP	000505800	FUSE	250V, NON, 35 AMP	3.00	EA	1.33	3.99
MPP	000505826	CONTACT	LINE SIDE, 3000 AMPS	2.00	EA	0.00	0.00
MPP	000505842	FUSE	250V NON 64 AMPS	12.00	EA	2.00	24.00
MPP	000505867	CONTACT	LOAD SIDE, 3000 AMPS	2.00	EA	0.00	0.00
MPP	000505883	MICROSWITCH	MICROSWITCH	0.00	EA	0.00	0.00
MPP	000505909	FUSE	SWITCHGEAR	2.00	EA	0.63	1.26
MPP	000505925	BREAKER	600 VAC, 150 AMP	2.00	EA	931.43	1,862.86
MPP	000505941	THERMOMETER	MAIN BEARING	2.00	EA	3,139.50	6,279.00
MPP	000505966	LIMITER	CURRENT, EL3100R, 100 AMPS	4.00	EA	626.37	2,505.46
MPP	000505982	LIMITER	CURRENT, EL3150R, 150 AMPS	4.00	EA	1,231.19	4,924.74
MPP	000506006	LIMITER	CURRENT, 400LAP10	1.00	EA	211.23	211.23
MPP	000506022	PAWL	DRIVING & LATCHING	2.00	EA	8.56	17.12
MPP	000506048	WHEEL	RATCHET	0.00	EA	53.77	0.00
MPP	000506063	STARTER	NON-REVERSING	1.00	EA	590.44	590.44
MPP	000506089	LIGHT	INDICATOR TRANSFORMER	4.00	EA	80.09	320.35
MPP	000506105	LIGHT	INDICATOR TRANSFORMER	3.00	EA	59.80	179.40
MPP	000506121	RELAY	OVERLOAD - SIEMENS	1.00	EA	138.52	138.52
MPP	000506147	STARTER	NON-REVERSING	1.00	EA	245.78	245.78
MPP	000506162	COIL	LINE STARTER	2.00	EA	52.41	104.81
MPP	000506188	CONTACTOR	MULTI-POLE	2.00	EA	60.80	121.60
MPP	000506204	TIMER	MCC	2.00	EA	154.24	308.48
MPP	000506220	STARTER	NON REVERSING	0.00	EA	0.00	0.00
MPP	000506246	CONTACT	AUXILIARY	4.00	EA	41.15	164.60
MPP	000506261	CONTACTOR	NON REVERSING	1.00	EA	733.20	733.20
MPP	000506287	LIMITER	CURRENT	2.00	EA	516.97	1,033.94
MPP	000506303	TRANSFORMER	CONTROL	1.00	EA	0.00	0.00

NOTE: SOH - Stock on Hand

Source: DARS 3342 Report (as of 5/31/07)

Maui Electric Company, Limited

MATERIALS PHYSICAL INVENTORY
MAALAEA POWER PLANT

WH	STOCK CODE	Item	Description	SOH	Unit	Price/ Unit	Total Cost/ Item
MPP	000506329	CONTACT	AUXILIARY	5.00	EA	55.52	277.60
MPP	000506345	TRANSFORMER	CONTROL	2.00	EA	0.00	0.00
MPP	000506360	PROTECTOR	MOTOR CIRCUIT	2.00	EA	395.57	791.14
MPP	000506386	PLUGS	BOLT HEATER	2.00	EA	381.26	762.52
MPP	000506402	TRANSFORMER	INDICATING LIGHT	4.00	EA	42.96	171.84
MPP	000506428	CONNECT	BREAKER, SPB100	5.00	EA	236.43	1,182.15
MPP	000506444	PROTECTOR	MOTOR CIRCUIT, BREAKER	0.00	EA	1,240.30	0.00
MPP	000506469	BLOCK	TIMING, M12	1.00	EA	113.98	113.98
MPP	000506485	STAB ASSY	FIVE STAR	1.00	EA	384.80	384.80
MPP	000506501	BOARD ASSY	CIRCUIT	3.00	EA	316.16	948.48
MPP	000506527	TRANSFORMER	GENERATOR	2.00	EA	0.00	0.00
MPP	000506543	SCR	GENERATOR	4.00	EA	0.00	0.00
MPP	000506568	DIODE	GENERATOR	12.00	EA	0.00	0.00
MPP	000506584	RELAY	GENERATOR	2.00	EA	0.00	0.00
MPP	000506600	CHOKE	FLTR	2.00	EA	0.00	0.00
MPP	000506626	RHEOSTAT	GENERATOR	2.00	EA	0.00	0.00
MPP	000506642	RESISTOR	47K, 1/2 WATT	2.00	PG	1.35	2.69
MPP	000506667	RESISTOR	2.2K OHM, 1/2 WATT	2.00	PG	1.35	2.69
MPP	000506683	RESISTOR	27K OHM, 2 WATT	4.00	PG	1.82	7.29
MPP	000506709	CAPACITOR	GENERATOR	1.00	EA	0.00	0.00
MPP	000506725	GUIDE	OIL RINGS	12.00	EA	0.00	0.00
MPP	000506741	RING	SPLIT OIL	2.00	EA	0.00	0.00
MPP	000506766	SEAL	RETAINER	4.00	EA	0.00	0.00
MPP	000506782	FELT	GENERATOR	63.00	EA	0.00	0.00
MPP	000506808	PLATE	LOCKING	24.00	EA	0.00	0.00
MPP	000506824	MOTOR, BALDOR	1/3HP, ED48FR, 1725 RPM,	1.00	EA	155.96	155.96
MPP	000506840	SPIDER	LOVEJOY	2.00	EA	0.00	0.00
MPP	000506865	LINER	BEARING	2.00	EA	4,726.94	9,453.88
MPP	000506881	LIMITER ASSY	CURRENT, 15 AMP	2.00	EA	69.50	139.00
MPP	000506907	LIMITER ASSY	CURRENT, 7	2.00	EA	0.00	0.00
MPP	000506923	MOTOR	OUTBOARD BRG, FRANKLIN	1.00	EA	225.42	225.42
MPP	000506949	INTERLOCK	ELECTRICAL AUX.	0.00	EA	19.64	0.00
MPP	000506964	PULLEY	GATES, VP	2.00	EA	42.72	85.44
MPP	000506980	VBELT	GATES, VP	4.00	EA	8.03	32.12
MPP	000507004	SHEAVE	VENT FAN	3.00	EA	35.29	105.87
MPP	000507020	BUSHING	VENT FAN, 1-1/8"	2.00	EA	7.54	15.08
MPP	000507026	MOTOR, SPRING CHARGING	FOR GENERATOR BREAKER.	2.00	EA	616.63	1,233.25
MPP	000507046	BUMPER	HARNISCHFEGER	0.00	EA	27.60	0.00
MPP	000507061	BOLT	ROD, 1/2" - 14	3.00	EA	24.25	72.75
MPP	000507087	BOLT	ROD, 1/2 X 10-5/8"	0.00	EA	31.95	0.00
MPP	000507103	HEX NUT	SELF LOCKING, 1"-14	6.00	EA	8.52	51.12
MPP	000507129	STOP NUT	ELASTIC SELF LOCKING	3.00	EA	0.00	0.00
MPP	000507145	SPRING	HARNISCHFEGER	4.00	EA	79.62	318.48
MPP	000507160	JAM NUT	BRAKE ASSY, 3/8"-16UNC	3.00	EA	75.26	225.78
MPP	000507186	HEX NUT	BRAKE ASSY, 1"-14	14.00	EA	1.19	16.66
MPP	000507202	PIN	BRAKE ASSY	3.00	EA	0.00	0.00
MPP	000507228	ROD	THREADED, GRADE B7 ALLOY STEEL ,	4.00	EA	56.57	226.26
MPP	000507244	NUT	HEX, NYLON, 1/2"	0.00	EA	0.00	0.00
MPP	000507269	SUPPORT	UPPER, SPRING	1.00	EA	251.37	251.37
MPP	000507285	ELBOW	DRIVE ASSY	1.00	EA	5.75	5.75
MPP	000507301	SUPPORT	LOWER SPRING	1.00	EA	153.22	153.22
MPP	000507327	RING	SNAP	3.00	EA	0.00	0.00
MPP	000507343	DRIVE	AXLE	1.00	EA	980.20	980.20
MPP	000507368	RING	SNAP, EXTERNAL	12.00	EA	5.66	67.88
MPP	000507384	SHAFT	DRIVE ASSY	1.00	EA	999.70	999.70
MPP	000507400	KEY	DRIVE ASSY	0.00	EA	13.71	0.00
MPP	000507426	BEARING	HARNISCHFEGER	4.00	EA	77.31	309.22
MPP	000507442	CONTROLLER	REVERSING - EXCITER	0.00	EA	0.00	0.00
MPP	000507467	BEARING	HARNISCHFEGER	4.00	EA	160.50	641.98
MPP	000507483	WHEELS	GRINDING	0.00	EA	70.40	0.00
MPP	000507509	ADAPTER	WHEEL	0.00	EA	145.00	0.00
MPP	000507525	BRUSH	CARBON	0.00	EA	10.80	0.00
MPP	000507541	OVERHAUL REPAIR KIT -STOP/START ACTUATOR	CONSIST OF: #14 (1EA) PACKING SEAT, #17	0.00	EA	1,122.11	0.00
MPP	000507566	RAM	HYDRAULIC	0.00	EA	4,918.54	0.00
MPP	000507582	GASKET KIT	VALVE - INGERSOLL-RAND	1.00	EA	341.17	341.17
MPP	000507608	ELEMENT	FILTER	3.00	EA	26.65	79.96

NOTE: SOH - Stock on Hand

Source: DARS 3342 Report (as of 5/31/07)

Maui Electric Company, Limited

MATERIALS PHYSICAL INVENTORY
MAALAEA POWER PLANT

WH	STOCK CODE	Item	Description	SOH	Unit	Price/ Unit	Total Cost/ Item
MPP	000507624	VALVE	SAFETY, 260 PSI	1.00	EA	15.28	15.28
MPP	000507640	KIT	RING, GASKET	1.00	EA	123.58	123.58
MPP	000507665	KIT	BEARING/CONN ROD	2.00	EA	456.38	912.76
MPP	000507681	SET	GASKET	7.00	EA	69.38	485.66
MPP	000507707	GASKET	AIRHEAD, 2ND STAGE	2.00	EA	6.15	12.30
MPP	000507723	VALVE	CHECK - 1/2" (INGERSOL RAND COMPR - 450)	1.00	EA	37.53	37.53
MPP	000507749	ORING	UPPER PARING DISC	11.00	EA	0.72	7.89
MPP	000507764	ORING	MINERAL OIL SEPARATOR	14.00	EA	9.63	134.77
MPP	000507780	ORING	MINERAL OIL SEPARATOR	9.00	EA	0.92	8.31
MPP	000507806	RING	DISTRIBUTING	3.00	EA	1,879.80	5,639.39
MPP	000507822	GASKET	MINERAL OIL SEPARATOR	2.00	EA	9.61	19.22
MPP	000507848	HUB	FRICTION CLUTCH	1.00	EA	739.39	739.39
MPP	000507863	TIMER	OMRON, 8 PIN 120 VAC	3.00	EA	288.84	866.52
MPP	000507889	KIT	MISER BALL VALVE	2.00	EA	486.11	972.22
MPP	000507905	BALL	SIZE: 1-1/2"	1.00	EA	132.95	132.95
MPP	000507921	ACTUATOR MODEL 20-39-R3	WORCESTER w/ 115V SOLENOID	2.00	EA	901.93	1,803.86
MPP	000507947	DISC	BOWL	6.00	EA	132.36	794.15
MPP	000507962	REPAIR KIT	WORCESTER BALL VALVE	4.00	EA	80.29	321.16
MPP	000507988	SWITCH	FLOW	1.00	EA	130.84	130.84
MPP	000508002	SCREW	MINERAL OIL SEPARATOR	1.00	EA	529.93	529.93
MPP	000508028	PIECE	CONN	1.00	EA	638.46	638.46
MPP	000508044	SUPPORT	MINERAL OIL SEPARATOR	1.00	EA	581.05	581.05
MPP	000508069	HOUSING	CONNECTION	1.00	EA	1,759.79	1,759.79
MPP	000508085	DISC	PARING, W/PIPE	2.00	EA	2,998.75	5,997.50
MPP	000508101	DISC	LOWER PARING	1.00	EA	2,083.03	2,083.03
MPP	000508127	THERMOMETER	MINERAL OIL SEPARATOR	1.00	EA	47.24	47.24
MPP	000508143	RING	LOCK, W/ COVER	1.00	EA	1,974.77	1,974.77
MPP	000508168	HOUSING	BALL BEARING	1.00	EA	1,038.10	1,038.10
MPP	000508184	SWITCH	PRESS, W/VITON .5-15 PSI	1.00	EA	95.31	95.31
MPP	000508200	SWITCH	PRESS, W/VITON (BARKSDALE CONTROLS)	2.00	EA	80.71	161.43
MPP	000508226	ACTUATOR	PNEUMATIC, WORCESTER MODEL 10-39-S	2.00	EA	720.51	1,441.02
MPP	000508242	REPAIR KIT	WORCESTER, 10RK	1.00	EA	133.35	133.35
MPP	000508267	PARTS KIT	ASCO, M-12	1.00	EA	68.20	68.20
MPP	000508283	LOCKWASHER	CLUTCH WORM WHEEL SHAFT	4.00	EA	1.05	4.20
MPP	000508309	NUT	ROUND - CLUTCH WORM WHEEL SHAFT	4.00	EA	3.18	12.72
MPP	000508325	GASKET	CLUTCH WORM WHEEL SHAFT	2.00	EA	1.55	3.10
MPP	000508341	NUT	ROUND - CLUTCH WORM WHEEL SHAFT	2.00	EA	3.30	6.60
MPP	000508366	LOCKWASHER	CLUTCH WORM WHEEL SHAFT	0.00	EA	1.35	0.00
MPP	000508382	PIN	CLUTCH WORM WHEEL SHAFT	1.00	EA	2.07	2.07
MPP	000508408	RING	STOP - CLUTCH WORM WHEEL SHAFT	2.00	EA	74.74	149.49
MPP	000508424	HOOD ASSY	MACHINE TOP	1.00	EA	0.00	0.00
MPP	000508440	HEATER ELEMENT	CHROMALOX 480V, 3 PH, 12KW, 33-1/16"	1.00	EA	2,247.44	2,247.44
MPP	000508465	KIT	REPAIR	1.00	EA	0.00	0.00
MPP	000508481	PLUGS	VALVE	34.00	EA	13.39	455.12
MPP	000508507	ORING	SEPARATION SYS	17.00	EA	2.64	44.80
MPP	000508523	GASKET	SEPARATION SYS	14.00	EA	2.68	37.51
MPP	000508549	GASKET	SEPARATION SYS	10.00	EA	16.59	165.94
MPP	000508564	RING	RECTANGULAR	12.00	EA	1.89	22.68
MPP	000508580	GASKET	DISCHARGE FUNNEL	3.00	EA	47.33	141.99
MPP	000508606	RING	RECTANGULAR	3.00	EA	14.90	44.70
MPP	000508622	KIT	WATER TRANSDUCER, WT200	2.00	EA	675.66	1,351.32
MPP	000508648	PIPE	INLET, FEED & DISCHARGE	0.00	EA	2,593.54	0.00
MPP	000508663	HOUSING	CONNECTING, FEED & DISCHARGE	2.00	EA	1,100.73	2,201.46
MPP	000508689	DISC	TOP, SEPARATOR BOWL	1.00	EA	0.00	0.00
MPP	000508705	FUSE	CONTROL UNIT	10.00	EA	2.54	25.40
MPP	000508721	RING	SEAL, GUARD	9.00	EA	7.58	68.22
MPP	000508747	VALVE	FLOW, SOLENOID VALVE BLOCK	2.00	EA	88.42	176.84
MPP	000508762	SWITCH	PRESSURE	1.00	EA	409.97	409.97
MPP	000508788	BREAKER	CIRCUIT	1.00	EA	110.08	110.08
MPP	000508804	VALVE	SOLENOID	2.00	EA	156.65	313.30
MPP	000508820	VALVE	SOLENOID BLOCK AIR	2.00	EA	403.93	807.86
MPP	000508846	KIT	SPARE PART	3.00	EA	518.43	1,555.29
MPP	000508861	KIT	SPARE PART	1.00	EA	24.89	24.89
MPP	000508887	KIT	SPARE PART	2.00	EA	274.07	548.14
MPP	000508903	PLUG	PURIFIER	3.00	EA	78.81	236.43
MPP	000508929	BALL	PURIFIER	8.00	EA	4.45	35.60
MPP	000508945	ORING	AIR COMPRESSOR, M12	0.00	EA	0.00	0.00

NOTE: SOH - Stock on Hand

Source: DARS 3342 Report (as of 5/31/07)

Maui Electric Company, Limited

MATERIALS PHYSICAL INVENTORY
MAALAEA POWER PLANT

WH	STOCK CODE	Item	Description	SOH	Unit	Price/ Unit	Total Cost/ Item
MPP	000508960	REPAIR KIT	AIR COMPRESSOR, M12	0.00	EA	78.77	0.00
MPP	000508986	VALVE	CHECK - COMPLETE	2.00	EA	2,406.25	4,812.50
MPP	000509000	VALVE	LP, SEAT, SUCTION	0.00	EA	611.80	0.00
MPP	000509026	VALVE	LP, RECEIVER, SUCTION	1.00	EA	512.84	512.84
MPP	000509042	VALVE	LP, SEAT, DELIVERY	0.00	EA	30.83	0.00
MPP	000509067	VALVE	LP, RECEIVER, DELIVERY	0.00	EA	223.96	0.00
MPP	000509083	VALVE	HP, SEAT, SUCTION	0.00	EA	316.80	0.00
MPP	000509109	VALVE	HP, RECEIVER, SUCTION	0.00	EA	141.25	0.00
MPP	000509125	VALVE	HP, SEAT, DELIVERY	0.00	EA	315.06	0.00
MPP	000509141	VALVE	HP, RECEIVER, DELIVERY	0.00	EA	127.57	0.00
MPP	000509166	PIPE	H.P. AIR COMPRESSOR, M-12	0.00	EA	685.08	0.00
MPP	000509182	PIPE	H.P. AIR COMPRESSOR, M-12	0.00	EA	482.42	0.00
MPP	000509208	PIN	PISTON	0.00	EA	434.72	0.00
MPP	000509224	RING	L.P. PISTON, FC	0.00	EA	41.82	0.00
MPP	000509240	RING	H.P. PISTON, FC	0.00	EA	36.36	0.00
MPP	000509265	RING	OIL, FC	0.00	EA	42.23	0.00
MPP	000509281	PLATE	L.P. VALVE, SNCM	0.00	EA	1,099.03	0.00
MPP	000509307	SPRING	L.P. VALVE, SWPA	0.00	EA	46.35	0.00
MPP	000509323	PLATE	H.P. VALVE, SNCM	2.00	EA	94.67	189.34
MPP	000509349	SPRING	H.P. VALVE, SWPA	0.00	EA	19.76	0.00
MPP	000509364	SEAL	OIL, FC	0.00	EA	41.60	0.00
MPP	000509380	BELT	COOLING FAN	0.00	EA	88.65	0.00
MPP	000509406	FILTER	AIR COMPRESSOR, M12	3.00	EA	446.42	1,339.26
MPP	000509422	COVER	CYLINDER, P.K.	0.00	EA	19.27	0.00
MPP	000509448	CYLINDER	LOWER, P.K.	0.00	EA	5.68	0.00
MPP	000509463	PACKING	BEARING COVER	0.00	EA	5.20	0.00
MPP	000509489	PACKING	SIDE COVER	0.00	EA	5.97	0.00
MPP	000509505	STOPPER	L.P. SUCTION VALVE	0.00	EA	11.75	0.00
MPP	000509521	COVER	L.P. DELIVERY VALVE, P.K.	0.00	EA	31.26	0.00
MPP	000509547	SEAT	L.P. SUCTION VALVE, P.K.	0.00	EA	34.54	0.00
MPP	000509562	SEAT	L.P. DELIVERY VALVE, P.K.	0.00	EA	38.64	0.00
MPP	000509588	COVER	H.P. VALVE COVER, P.K.	0.00	EA	14.62	0.00
MPP	000509604	SEAT	H.P. VALVE, P.K.	0.00	EA	12.39	0.00
MPP	000509620	SEAT	H.P. DELIVERY VALVE	0.00	EA	11.44	0.00
MPP	000509646	PACKING	PUMP COVER	0.00	EA	3.12	0.00
MPP	000509661	PACKING	OIL PUMP	0.00	EA	3.12	0.00
MPP	000509687	FAN	COOLING FAN	0.00	EA	3,424.25	0.00
MPP	000509703	VALVE	H.P. SUCTION	0.00	EA	1,680.34	0.00
MPP	000509729	VALVE	H.P. SUCTION	0.00	EA	1,680.35	0.00
MPP	000509745	STOPPER	LP SUCTION VALVE	0.00	EA	178.10	0.00
MPP	000509760	STOPPER	LP DELIVERY VALVE	0.00	EA	113.38	0.00
MPP	000509786	CYLINDER	HASEGAWA AIR COMPRESSOR	0.00	EA	3,979.16	0.00
MPP	000509802	STOPPER	HP SUCTION VALVE	0.00	EA	85.60	0.00
MPP	000509828	STOPPER	HP DELIVERY VALVE	0.00	EA	85.60	0.00
MPP	000509844	PISTON	HASEGAWA AIR COMPRESSOR	0.00	EA	1,796.87	0.00
MPP	000509869	AIR VALVE	GLOBE - COMPLETE	2.00	EA	523.09	1,046.18
MPP	000509885	DISC	AIR RECEIVER DRAIN VALVE	4.00	EA	166.40	665.60
MPP	000509901	NUT	DISC	4.00	EA	16.64	66.56
MPP	000509927	LOCKWASHER	AIR RECEIVER DRAIN VALVE	4.00	EA	4.16	16.64
MPP	000509943	GASKET	AIR RECEIVER DRAIN VALVE	2.00	EA	13.52	27.04
MPP	000509968	PACKING	AIR RECEIVER DRAIN VALVE	4.00	EA	10.40	41.60
MPP	000509984	VALVE	FLOW	2.00	EA	0.00	0.00
MPP	000510008	VALVE	FLOW	16.00	EA	77.15	1,234.38
MPP	000510024	VALVE	FLOW	2.00	EA	0.00	0.00
MPP	000510040	KIT	SPARE PARTS	4.00	EA	302.06	1,208.24
MPP	000510065	DRAIN ASSY	AUTOMATIC	1.00	EA	0.00	0.00
MPP	000510081	BELT	GATES,	2.00	EA	0.00	0.00
MPP	000510107	BEARING	LOWER, DOUBLE SEALED	2.00	EA	8.61	17.22
MPP	000510123	ORING	ROTOR & BEARING ASSY	2.00	EA	0.00	0.00
MPP	000510149	BEARING	UPPER, DOUBLE SEALED	2.00	EA	18.62	37.24
MPP	000510164	SEAL	U.S. MECHANICAL	4.00	EA	114.57	458.29
MPP	000510180	TOOL	COMPRESSION	0.00	EA	0.00	0.00
MPP	000510206	RING	RECTANGULAR	14.00	EA	14.45	202.23
MPP	000510222	RING	RECTANGULAR	14.00	EA	11.24	157.38
MPP	000510248	RING	RECTANGULAR	14.00	EA	11.07	155.02
MPP	000510263	RING	RECTANGULAR	14.00	EA	49.28	689.90
MPP	000510289	RING	SEAL	14.00	EA	47.53	665.37

NOTE: SOH - Stock on Hand

Source: DARS 3342 Report (as of 5/31/07)

Maui Electric Company, Limited

MATERIALS PHYSICAL INVENTORY
MAALAEA POWER PLANT

WH	STOCK CODE	Item	Description	SOH	Unit	Price/ Unit	Total Cost/ Item
MPP	000510305	PLUG	VALVE	42.00	EA	12.51	525.21
MPP	000510321	PLUG	RUBBER	3.00	EA	0.00	0.00
MPP	000510347	ORING	SEPARATOR BOWL	13.00	EA	2.63	34.14
MPP	000510362	ORING	SEPARATOR BOWL	13.00	EA	8.49	110.37
MPP	000510388	ORING	FRAME / HOOD	28.00	EA	0.94	26.20
MPP	000510404	ORING	MACHINE BOTTOM	30.00	EA	9.38	281.53
MPP	000510420	ORING	SEPARATOR BOWL	28.00	EA	1.50	42.11
MPP	000510446	ORING	FRAME / HOOD	17.00	EA	0.80	13.67
MPP	000510461	ORING	FRAME / HOOD	42.00	EA	0.94	39.45
MPP	000510487	ORING	SEPARATOR BOWL	17.00	EA	1.28	21.74
MPP	000510503	ORING	SEPARATOR BOWL	15.00	EA	1.62	24.27
MPP	000510529	O-RING	SEPARATOR BOWL	12.00	EA	4.78	57.38
MPP	000510545	ORING	INTERMEDIATE SERVICE KIT	32.00	EA	14.15	452.81
MPP	000510560	ORING	FRAME / HOOD	29.00	EA	0.94	27.37
MPP	000510586	ORING	SEPARATOR BOWL	13.00	EA	4.24	55.17
MPP	000510602	MOLYCOTE	321R, FLOW SIDE LACQUER	4.00	EA	64.06	256.25
MPP	000510628	MOLYCOTE PASTE	SERVICE KIT	0.00	EA	0.00	0.00
MPP	000510644	OIL	WORM GEAR HOUSING	1.00	EA	0.00	0.00
MPP	000510669	DISC	TOP, SEPARATOR, BOWL	0.00	EA	0.00	0.00
MPP	000510685	FUSE	KIT	9.00	EA	0.00	0.00
MPP	000510701	DISC	GRAVITY, 53MM	0.00	EA	0.00	0.00
MPP	000510727	DISC	GRAVITY, 55MM	0.00	EA	0.00	0.00
MPP	000510743	DISC	GRAVITY, 50.5MM	0.00	EA	0.00	0.00
MPP	000510768	DISC	GRAVITY, 57MM	0.00	EA	0.00	0.00
MPP	000510784	DISC	BOWL	2.00	EA	98.13	196.25
MPP	000510800	ORING	MACHINE BOTTOM	22.00	EA	15.64	344.12
MPP	000510826	ORING	MACHINE BOTTOM	25.00	EA	0.68	17.10
MPP	000510842	BALLBEARING	MACHINE BOTTOM	4.00	EA	138.20	552.78
MPP	000510867	BALLBEARING	MACHINE BOTTOM	4.00	EA	141.68	566.70
MPP	000510883	GASKET	MACHINE BOTTOM	16.00	EA	30.25	483.97
MPP	000510909	ORING	MACHINE BOTTOM	25.00	EA	0.68	17.10
MPP	000510925	ELEMENT	FRICTION	8.00	EA	44.06	352.45
MPP	000510941	LOCTITE	242, MAJOR SERVICE KIT	2.00	EA	16.49	32.98
MPP	000510966	ORING	MAJOR SERVICE KIT	14.00	EA	2.34	32.74
MPP	000510982	ORING	SEPARATOR BOWL	13.00	EA	1.90	24.74
MPP	000511006	RING	RECTANGULAR	13.00	EA	50.40	655.24
MPP	000511022	BUFFER	RUBBER, MACHINE BOTTOM	11.00	EA	82.86	911.51
MPP	000511048	BELT	FLAT, MACHINE BOTTOM	8.00	EA	53.71	429.67
MPP	000511063	ORING	SEPARATOR BOWL	7.00	EA	14.34	100.39
MPP	000511089	METER	FLOW, UNIVERSAL	0.00	EA	0.00	0.00
MPP	000511105	VALVE	3/4", 150PSI, RELIEF	1.00	EA	134.40	134.40
MPP	000511121	BASKET	O.W.W.T.S.	0.00	EA	0.00	0.00
MPP	000511135	ELEMENT, MEMBRANE, SIZE: 28 MIL	FOR OILY WASTE WATER TREATMENT	0.00	EA	751.40	0.00
MPP	000511147	MEMBRANE	MODEL: CG8040F1002 47MIL	6.00	EA	1,577.70	9,466.22
MPP	000511162	ORING	O.W.W.T.S.	82.00	EA	0.00	0.00
MPP	000511188	ORING	O.W.W.T.S.	62.00	EA	0.34	21.08
MPP	000511204	BAG	POLYESTER FILTER	22.00	EA	2.51	55.14
MPP	000511220	VALVE	PNEUMATIC CHANGEOVER	1.00	EA	1,077.06	1,077.06
MPP	000511246	REPAIR KIT	O.W.W.T. SYSTEM (VALVE)	2.00	EA	670.13	1,340.26
MPP	000511261	CONVERTER	SIGNAL, 136 CHANNELS	1.00	EA	0.00	0.00
MPP	000511287	ORING	NETZSCH	3.00	EA	22.59	67.77
MPP	000511303	STATOR	NETZSCH	2.00	EA	360.39	720.79
MPP	000511329	ORING	STATOR	7.00	EA	26.24	183.68
MPP	000511345	SEAL	CASTING	5.00	EA	23.46	117.30
MPP	000511360	PIN	CONN. ROD	3.00	EA	12.48	37.45
MPP	000511386	SEAL	CONN ROD	1.00	EA	21.87	21.87
MPP	000511402	ORING	NETZSCH	8.00	EA	10.68	85.42
MPP	000511428	ROTOR	NETZSCH	4.00	EA	896.19	3,584.77
MPP	000511444	REGISTER	METER	0.00	EA	0.00	0.00
MPP	000511469	ADAPTER	ADAPTER	0.00	EA	0.00	0.00
MPP	000511485	COUNTER ASSY	VAREC LEVEL GAUGE, FUEL TANK 3A	1.00	EA	163.53	163.53
MPP	000511501	GEAR	PINION	1.00	EA	26.20	26.20
MPP	000511527	DIAL	DIAL	1.00	EA	23.04	23.04
MPP	000511543	GEAR	DIAL	1.00	EA	24.49	24.49
MPP	000511568	GASKET	COUNTER COVER	4.00	EA	11.23	44.92
MPP	000511584	SPRING	NEGATOR	1.00	EA	100.88	100.88
MPP	000511600	TAPE/CABLE	TAPE/CABLE	1.00	EA	146.68	146.68

NOTE: SOH - Stock on Hand

Source: DARS 3342 Report (as of 5/31/07)

Maui Electric Company, Limited

MATERIALS PHYSICAL INVENTORY
MAALAEA POWER PLANT

WH	STOCK CODE	Item	Description	SOH	Unit	Price/ Unit	Total Cost/ Item
MPP	000511626	RODS	BRASS, 2"	3.00	EA	193.01	579.03
MPP	000511642	BUSHING	SOLID BRONZE, 1"	0.00	EA	11.33	0.00
MPP	000511667	BUSHING	BRONZE, 1/2" X 1-3/4"	0.00	EA	35.57	0.00
MPP	000511683	BUSHING	BRONZE, 3/4" X 2"	0.00	EA	40.93	0.00
MPP	000511709	BUSHING	BRONZE, 3/4" X 2-1/4"	0.00	EA	53.48	0.00
MPP	000511725	BUSHING	BRONZE, 1" x 2-3/4"	0.00	EA	76.93	0.00
MPP	000511741	BUSHING	BRONZE, 1-1/2" X 3"	0.00	EA	79.61	0.00
MPP	000511766	BUSHING	BRONZE, 1-1/2" X 3-1/2"	0.00	EA	114.57	0.00
MPP	000511782	ROD	THREADED, 1/2" X 13 X 6' LGTH	8.00	EA	11.96	95.67
MPP	000511808	ROD	THREADED, 5/8"-11 x 12ft	4.00	EA	171.24	684.96
MPP	000511824	ROD	THREADED, 3/4" X 10'	11.00	EA	14.37	158.12
MPP	000511840	ROD	THREADED, 7/8" X 9" X 6' LGTH	1.00	EA	16.98	16.98
MPP	000511865	ROD	THREADED, 1" X 6FT	6.00	EA	26.14	156.82
MPP	000511881	STOCK	ROUND, 1/4" X 6, BRASS ALLOY 360	3.00	EA	29.16	87.49
MPP	000511907	STOCK	ROUND, 3/8" X 6	2.00	EA	37.50	75.00
MPP	000511923	STOCK	ROUND, 1/2" X 6	28.00	EA	17.19	481.21
MPP	000511949	ROUND STOCK	BRASS , 5/8" X 6', ALLOY 360	6.00	EA	43.31	259.83
MPP	000511964	STOCK	ROUND, 3/4" X 6FT	5.00	EA	21.84	109.19
MPP	000511980	STOCK	ROUND, 1" X 6	3.00	EA	112.49	337.48
MPP	000512004	GAUGE	WIKA, 100 PSI/LQ	23.00	EA	32.02	736.44
MPP	000512020	GAUGE	WIKA, 200 PSI/LQ	18.00	EA	34.79	626.29
MPP	000512046	GAUGE	WIKA, 30HG/LQ 2.5" DIAL	7.00	EA	46.68	326.76
MPP	000512061	GAUGE	WIKA, 30PSI/LQ	23.00	EA	43.23	994.30
MPP	000512087	GAUGE	WIKA, 60 PSI/LQ	8.00	EA	35.08	280.68
MPP	000512103	GAUGE	WIKA, 15 PSI/LQ	6.00	EA	41.95	251.68
MPP	000512129	GAUGE	WIKA, 600 PSI	12.00	EA	40.93	491.14
MPP	000512145	GAUGE	WIKA, 300 PSI, 2-1/2", 1/4MNPT BTM	12.00	EA	36.17	434.07
MPP	000512160	GAUGE	DURALIFE	7.00	EA	61.44	430.06
MPP	000512186	GAUGE, DURALIFE	2-1/2", 160#, 1/4" NPT BACK	7.00	EA	58.77	411.38
MPP	000512202	VALVE	WAFER TYPE	0.00	EA	151.34	0.00
MPP	000512228	VALVE	CENTERLINE SERIES, A	0.00	EA	295.00	0.00
MPP	000512244	VALVE	CENTERLINE SERIES, A	0.00	EA	503.35	0.00
MPP	000512269	ELEMENT	AIR FILTER	0.00	EA	18.69	0.00
MPP	000512285	GASKET	HEAD	0.00	EA	3.73	0.00
MPP	000512301	PLUGS	SPARK	0.00	EA	4.41	0.00
MPP	000512327	GASKET	END CAP	0.00	EA	3.24	0.00
MPP	000512343	POINT	SELF-PRIMING PUMP	0.00	EA	19.35	0.00
MPP	000512368	MUFFLER	SELF-PRIMING PUMP	0.00	EA	26.92	0.00
MPP	000512384	CONDENSER	SELF-PRIMING PUMP	0.00	EA	7.39	0.00
MPP	000512400	FILTER	DISPOSABLE	0.00	EA	12.31	0.00
MPP	000512426	FIXTURE	LIGHT	0.00	EA	60.00	0.00
MPP	000512442	GROUT	CEILCOTE 668B CHOCK, A,B,C	0.00	EA	223.13	0.00
MPP	000512467	MEDIA	AIR FILTER, 20" X 20" X 1"	93.00	EA	1.16	108.16
MPP	000512483	FILTER	PLEATED 20" X 25" X 2", M12 &13	47.00	EA	5.68	266.98
MPP	000512509	V-BELT	DAYCO	4.00	EA	0.00	0.00
MPP	000512525	SHEAVE	DAYCO	1.00	EA	0.00	0.00
MPP	000512541	TUBING, SS	316 STAINLESS, 1/4" OD	70.00	FT	3.53	247.28
MPP	000512566	TUBING,STAINLESS	3/8" O.D. X .35" X 20'	80.00	FT	2.38	190.26
MPP	000512582	TUBING, STAINLESS	1/4" O.D. X .035" X 20'	30.00	FT	1.98	59.37
MPP	000512608	ELBOW	SS UNION, 1/2"	0.00	EA	23.99	0.00
MPP	000512624	ELBOW	SS FEMALE, 1/2"	0.00	EA	26.69	0.00
MPP	000512640	ELBOW	SS MALE, 1/2"	2.00	EA	23.75	47.50
MPP	000512665	UNION	BRASS, 3/8"	9.00	EA	3.33	30.00
MPP	000512681	ELBOW	FEMALE, 1/4" X 1/4"	2.00	EA	5.31	10.62
MPP	000512707	ELBOW	FEMALE, 3/8" X 1/4"	0.00	EA	5.78	0.00
MPP	000512723	ELBOW	UNION, 1/4" X 1/4"	0.00	EA	3.65	0.00
MPP	000512749	ELBOW	UNION, 3/8" X 3/8"	0.00	EA	4.85	0.00
MPP	000512764	TUBING, SS	316 STAINLESS, 1/2" OD X .065 WALL X 20'	39.00	FT	4.79	186.86
MPP	000512780	UNION	1/2" X 1/2"	0.00	EA	4.75	0.00
MPP	000512806	UNION	5/8" X 5/8"	0.00	EA	7.26	0.00
MPP	000512822	UNION	SS, 3/8"	0.00	EA	12.03	0.00
MPP	000512848	ELBOW	STREET, 1/8"	0.00	EA	0.42	0.00
MPP	000512863	CONNECTOR	1/2" MALE HOSE	0.00	EA	8.20	0.00
MPP	000512889	PIPE	SCH 80 SEAMLESS BLACK, 1/2"	0.00	FT	1.91	0.00
MPP	000512905	PIPE	SCH 80 SEAMLESS BLACK, 3/4"	0.00	FT	2.02	0.00
MPP	000512921	PIPE	SCH 80 SEAMLESS BLACK, 3"	0.00	FT	8.35	0.00
MPP	000512947	TRAFUL	DRY FIL 316, SPEC COMPOUND,	2.00	EA	376.48	752.96

NOTE: SOH - Stock on Hand

Source: DARS 3342 Report (as of 5/31/07)

Maui Electric Company, Limited

MATERIALS PHYSICAL INVENTORY
MAALAEA POWER PLANT

WH	STOCK CODE	Item	Description	SOH	Unit	Price/ Unit	Total Cost/ Item
MPP	000512962	THREE BOND	GRAY, TUBE	7.00	EA	27.75	194.24
MPP	000512988	THREE BOND	YELLOW, TUBE	6.00	EA	62.54	375.27
MPP	000513002	THREE BOND	BLACK, TUBE	9.00	EA	57.20	514.81
MPP	000513028	THREE BOND	GRAY, 1.5 KG CAN	0.00	EA	25.92	0.00
MPP	000513044	SCREEN ASSY	INNER - FUEL UNLOADING STATION	3.00	EA	85.28	255.84
MPP	000513069	TAPE	LINEN COTTON	9.00	EA	2.76	24.83
MPP	000513085	TAPE	CAMBRIC, 1-1/2" X 36'	48.00	EA	45.93	2,204.75
MPP	000513101	TAPE	IRRATHANE, I202	25.00	EA	13.09	327.23
MPP	000513127	CARTRIDGE	STEAM CLEANER	0.00	EA	3.10	0.00
MPP	000513143	WASHER	STEAM CLEANER	0.00	EA	1.15	0.00
MPP	000513168	SEAL	LIP - STEAM CLEANER	0.00	EA	2.52	0.00
MPP	000513184	RING	RETAINING - STEAM CLEANER	0.00	EA	1.10	0.00
MPP	000513200	SEAL ASSY	STEAM CLEANER	0.00	EA	116.11	0.00
MPP	000513226	STRAINER	1-1/8", STEAM CLEANER	0.00	EA	7.70	0.00
MPP	000513242	SHAFT	TAPERED STUB	0.00	EA	736.00	0.00
MPP	000513267	FILTER	OIL - INGERSOLL RAND HOUSE COMPRESSOR	6.00	EA	109.89	659.31
MPP	000513283	COOLANT	ULTRA - INGERSOLL RAND HOUSE COMPRESSOR	4.00	EA	305.42	1,221.67
MPP	000513309	ELEMENT	AIR FILTER, IR HOUSE COMPRESSOR	4.00	EA	43.60	174.41
MPP	000513312	ELEMENT, SEPARATOR	FOR INGERSOLL RAND AIR COMPRESSOR	2.00	EA	246.50	493.00
MPP	000513325	SEAL COVER	MECHANICAL, 11A 3 X 1-1/2 X 8 PUMP	0.00	EA	865.09	0.00
MPP	000513341	SEAT 7 MECHANICAL SEAL 1	CCN: 28518918	4.00	EA	86.93	347.70
MPP	000513366	ROTOR, JC 1.750 T-2	MECHANICAL SEAL, 3 X 1-1/2 X 8	3.00	EA	102.87	308.61
MPP	000513382	RING, RETAINING 5108-177H	CCN: 27328889	1.00	EA	19.79	19.79
MPP	000513408	REPAIR KIT, LIQUID END	3 X 1-1/2 X 8	3.00	EA	107.68	323.05
MPP	000513424	REPAIR KIT, FRAME END	3 X 1-1/2 X 8	3.00	EA	58.33	174.99
MPP	000513440	SLEEVE, SHAFT BARE	MODEL D 1011 & D1012	3.00	EA	478.09	1,434.28
MPP	000513465	DEFLECTOR	1.62 X 2.88 X	3.00	EA	4.17	12.50
MPP	000513481	BEARING, LINE	ROLLER	2.00	EA	62.98	125.95
MPP	000513507	BEARING, THRUST ROLLER	FAFNIR	4.00	EA	100.91	403.64
MPP	000513523	SEAL, OIL	1.156 X 1.874 X 0.250	2.00	EA	4.20	8.40
MPP	000513549	SEAL, OIL	1.781 X 2.502 X 0.312	2.00	EA	7.76	15.52
MPP	000516542	JOINT SEALANT, 1/2" X 150'	GENERAL MAINTENANCE	3.00	EA	399.87	1,199.62
MPP	000516567	JOINT SEALANT, 3/4" X 100'	GENERAL MAINTENANCE	2.00	EA	517.68	1,035.36
MPP	000523365	TRANSMITTER	DIFFERENTIAL PRESSURE, 0-250	1.00	EA	2,110.28	2,110.28
MPP	000529081	COIL REPLACE KIT	115V, SIZE 2, 60Hz	4.00	EA	106.64	426.56
MPP	000535088	LAMP, INDICATING	COLOR: RED	4.00	EA	60.71	242.86
MPP	000535104	LAMP, INDICATING	COLOR: GREEN	3.00	EA	61.91	185.74
MPP	000535187	UNIT	TERMINATION	3.00	EA	96.40	289.20
MPP	000535203	UNIT	TERMINAL	1.00	EA	117.60	117.60
MPP	000535229	UNIT	TERMINATION	1.00	EA	110.40	110.40
MPP	000535245	UNIT	TERMINATION, OPU-C	7.00	EA	85.60	599.20
MPP	000535260	UNIT	TERMINATION, DIGITAL/ANALOG	2.00	EA	78.40	156.80
MPP	000535286	UNIT	TERMINATION	3.00	EA	88.40	265.20
MPP	000535302	UNIT	MULTIFUNCTION TERM	1.00	EA	157.20	157.20
MPP	000535328	UNIT	TERMINATION	1.00	EA	163.60	163.60
MPP	000535344	CABLE	DISTR. CONTROL SYS	1.00	EA	24.08	24.08
MPP	000535369	CABLE	DISTR. CONTROL SYS	3.00	EA	62.60	187.80
MPP	000535385	RELAY	SS, DC, ODC24-A	8.00	EA	19.76	158.08
MPP	000535401	RELAY	SS, AC, OAC24A	15.00	EA	20.34	305.10
MPP	000535427	INPUT	ANALOG SLAVE	1.00	EA	298.00	298.00
MPP	000535443	SLAVE	CONTROL INTERFACE	12.00	EA	318.00	3,816.00
MPP	000535468	INPUT	DIGITAL SLAVE	1.00	EA	250.80	250.80
MPP	000535484	PANEL	FIELD TERM	1.00	EA	10.00	10.00
MPP	000535500	SLAVE	LOOP, INTERFACE	2.00	EA	1,794.00	3,588.00
MPP	000535526	CONTROLLER	MULTIFUNCTION TERM	0.00	EA	3,600.00	0.00
MPP	000535542	MODULE	ANALOG MASTER	1.00	EA	831.20	831.20
MPP	000535567	MODULE	BUSS INTERFACE	2.00	EA	1,938.00	3,876.00
MPP	000535583	MODULE	ANALOG SLAVE	1.00	EA	451.60	451.60
MPP	000535609	MODULE	ANALOG SLAVE	1.00	EA	626.80	626.80
MPP	000535625	SLAVE	DIGITAL, I/O	2.00	EA	288.40	576.80
MPP	000535641	CONTROLLER	MULTIFUNCTION TERM	2.00	EA	6,670.00	13,340.00
MPP	000535666	MODULE	ANALOG SLAVE	1.00	EA	1,850.00	1,850.00
MPP	000535682	UNIT	TERMINATION	2.00	EA	1,850.00	3,700.00
MPP	000535708	MODULE	ANALOG SLAVE	1.00	EA	626.00	626.00
MPP	000535724	DIODE	SIG., 100V, IN914B	1.00	EA	1.15	1.15

NOTE: SOH - Stock on Hand

Source: DARS 3342 Report (as of 5/31/07)

Maui Electric Company, Limited

MATERIALS PHYSICAL INVENTORY
MAALAEA POWER PLANT

WH	STOCK CODE	Item	Description	SOH	Unit	Price/ Unit	Total Cost/ Item
MPP	000535740	AC MODULE ASSY	DISTR. CONTROL SYS	1.00	EA	409.50	409.50
MPP	000535765	MODULE ASSY	BUS MONITOR	1.00	EA	341.25	341.25
MPP	000535781	JUMPER	TERM BLOCK	1.00	EA	0.00	0.00
MPP	000535807	SOB	TERM BLOCK	1.00	EA	0.00	0.00
MPP	000535823	SHIELD	TERM BLOCK	1.00	EA	1.89	1.89
MPP	000535849	IEMMUO ASSY	PCB	1.00	EA	370.00	370.00
MPP	000535864	PROC	MULTIFUNCTION TERM	0.00	EA	0.00	0.00
MPP	000535880	FUSE	2A	0.00	EA	0.00	0.00
MPP	000535906	FUSE	.25A	25.00	EA	1.69	42.25
MPP	000535922	FUSE	1A	15.00	EA	1.80	27.00
MPP	000535948	FUSE	4A	5.00	EA	1.25	6.25
MPP	000535963	FUSE	3A	5.00	EA	1.00	5.00
MPP	000535989	FUSE	SLO-BLO, 2A, 250V	1.00	EA	2.50	2.50
MPP	000536003	SEAL	ORING - DIST. CONTROL SYS	1.00	EA	2.95	2.95
MPP	000536029	SEAL	ORING - DIST. CONTROL SYS	1.00	EA	5.51	5.51
MPP	000536045	MODULE	ANALOG SLAVE	3.00	EA	925.00	2,775.00
MPP	000536060	BOARD	CIRCUIT	1.00	EA	0.00	0.00
MPP	000536086	TRANSMITTER	DISTR. CONTROL SYS	0.00	EA	0.00	0.00
MPP	000536102	CABLE	DISTR. CONTROL SYS	1.00	EA	0.00	0.00
MPP	000536128	UNIT	TERMINATION	0.00	EA	194.99	0.00
MPP	000536144	STORAGE	SUPERLOOP	1.00	EA	0.00	0.00
MPP	000536169	PANEL	POWER ENTRY	1.00	EA	751.20	751.20
MPP	000536185	FAN ASSY	POWER ENTRY	1.00	EA	240.00	240.00
MPP	000536201	UNIT	MODULE MOUNTING	1.00	EA	180.00	180.00
MPP	000536227	INPUT	POWER MODULE AC	0.00	EA	546.80	0.00
MPP	000536243	CRT	POWER SYSTEM	0.00	EA	3,940.00	0.00
MPP	000536268	SCANNER	KEYBOARD	1.00	EA	106.00	106.00
MPP	000536284	DRIVE	DISC, 5.25"	0.00	EA	162.00	0.00
MPP	000536300	SWITCH	POWER SUPPLY, 135W	1.00	EA	302.00	302.00
MPP	000536326	SWITCH	POWER SWITCH, 500W	1.00	EA	1,288.00	1,288.00
MPP	000536342	CAGE ASSY	CARD	1.00	EA	1,480.00	1,480.00
MPP	000536367	DISK ASSY	HARD	1.00	EA	1,760.00	1,760.00
MPP	000536383	PCB ASSY	INP, DIS	1.00	EA	70.00	70.00
MPP	000536409	MODULE	KEYBOARD	1.00	EA	504.00	504.00
MPP	000536425	PROCESSOR	COMMUNICATION	0.00	EA	1,938.00	0.00
MPP	000536441	MODULE	LOOP	1.00	EA	1,794.00	1,794.00
MPP	000536466	UNIT	COMM. TERM	1.00	EA	300.00	300.00
MPP	000536482	CARD	GRAPHICS	1.00	EA	5,800.00	5,800.00
MPP	000536508	MODULE	PROCESSOR	1.00	EA	11,300.00	11,300.00
MPP	000536524	MODULE	SERIAL	0.00	EA	1,596.00	0.00
MPP	000536540	PWR MODULE	AC SYSTEM	2.00	EA	0.00	0.00
MPP	000536565	BOARD	BAILEY	1.00	EA	0.00	0.00
MPP	000536567	TRANSMITTER, BAILEY	FOR INSTRUMENT AIR HEADER PRESSURE	1.00	EA	1,170.86	1,170.86
MPP	000536581	RTD	TEMP. SENSOR	1.00	EA	312.00	312.00
MPP	000536607	TRANSMITTER	INLET PRESS	1.00	EA	1,446.22	1,446.22
MPP	000536623	RTD	GEN. BRG. TEMP.	4.00	EA	491.12	1,964.49
MPP	000536649	SWITCH	LEVEL - GEN. RUNDOWN TANK	1.00	EA	0.00	0.00
MPP	000536664	RTD	GEN. L.O. SUPPLY	1.00	EA	0.00	0.00
MPP	000536680	RTD	GEN. BRG. L.O. DRAIN TEMP	3.00	EA	0.00	0.00
MPP	000536706	SWITCH	LEVEL - GEN. RUNDOWN TANK	2.00	EA	423.15	846.30
MPP	000536722	SWITCH	MICRO	9.00	EA	22.39	201.55
MPP	000536748	FUSE	10A, 250V	10.00	EA	4.96	49.60
MPP	000536763	FUSE	10A, 250V	10.00	EA	4.96	49.60
MPP	000536789	FUSE	20A, 250V	0.00	EA	4.96	0.00
MPP	000536805	FUSE	30A, 250V	10.00	EA	4.96	49.60
MPP	000536821	SWITCH	PRESS. ADJ, 0 - 30#	2.00	EA	198.58	397.16
MPP	000536847	SWITCH	PRESSURE, 50-250 PSIG	0.00	EA	196.99	0.00
MPP	000536862	SWITCH	DIFF. PRESS, TURBINE L.O. FILTER	2.00	EA	0.00	0.00
MPP	000536888	RTD	DUPLEX ELEMENT GEN. AIR TEMP.	2.00	EA	0.00	0.00
MPP	000536904	SWITCH	DIFF. PRESS / TURBINE GEN. ROOM	3.00	EA	86.67	260.00
MPP	000536920	SWITCH	FLOW, GEN. VENT AIR	1.00	EA	0.00	0.00
MPP	000536946	RTD	DUPLEX ELEMENT GEN. AIR TEMP.	2.00	EA	0.00	0.00
MPP	000536961	TRANSMITTER	PRESSURE/COMPRESSOR DISCHARGE	1.00	EA	0.00	0.00
MPP	000536987	RTD	COMPRESSOR / INLET TEMP	2.00	EA	0.00	0.00
MPP	000537001	PARTS KIT	XDCR /TRANSMITTER	0.00	EA	156.00	0.00
MPP	000537027	PARTS KIT	XDCR /TRANSMITTER	1.00	EA	180.00	180.00
MPP	000537043	PARTS KIT	XDCR /TRANSMITTER	1.00	EA	168.00	168.00

NOTE: SOH - Stock on Hand

Source: DARS 3342 Report (as of 5/31/07)

Maui Electric Company, Limited

MATERIALS PHYSICAL INVENTORY
MAALAEA POWER PLANT

WH	STOCK CODE	Item	Description	SOH	Unit	Price/ Unit	Total Cost/ Item
MPP	000537068	PARTS KIT	XDCR /TRANSMITTER	1.00	EA	168.00	168.00
MPP	000537084	PARTS KIT	XDCR /TRANSMITTER	1.00	EA	244.00	244.00
MPP	000537100	PARTS KIT	XDCR /TRANSMITTER	0.00	EA	244.00	0.00
MPP	000537126	KIT	TRANSDUCER	1.00	EA	204.00	204.00
MPP	000537142	TRANSMITTER	GAGE, 0 - 100 PSI	1.00	EA	0.00	0.00
MPP	000537167	KIT	XDCR /TRANSMITTER	2.00	EA	0.00	0.00
MPP	000537183	TRANSMITTER	ABSOLUTE, 0 - 30 PSI	0.00	EA	0.00	0.00
MPP	000537209	KIT	XDCR /TRANSMITTER	2.00	EA	0.00	0.00
MPP	000537225	TRANSMITTER	ABSOLUTE, 0 - 360: H20	1.00	EA	0.00	0.00
MPP	000537241	KIT	XDCR /TRANSMITTER	1.00	EA	0.00	0.00
MPP	000537266	TRANSMITTER	GAGE, 0 - 5800 PSI	1.00	EA	1,199.66	1,199.66
MPP	000537282	KIT	BCN TRANSDUCER	1.00	EA	0.00	0.00
MPP	000537308	TRANSMITTER	DIFFERENTIAL, 0 - 75 PSI	0.00	EA	0.00	0.00
MPP	000537324	KIT	ORING FLG	2.00	EA	0.00	0.00
MPP	000537340	TRANSMITTER	DIFFERENTIAL, 0 - 75 PSI	0.00	EA	0.00	0.00
MPP	000537365	KIT	ORING FLG	2.00	EA	0.00	0.00
MPP	000537381	TRANSMITTER	GAGE,	1.00	EA	0.00	0.00
MPP	000537407	KIT	ORING FLG	1.00	EA	0.00	0.00
MPP	000537423	TRANSMITTER	DIFFERENTIAL, 0 - 1000 IN H20	4.00	EA	2,063.84	8,255.36
MPP	000537449	AMP KIT	BC TRANSMITTER	7.00	EA	0.00	0.00
MPP	000537464	ASSY	CARTRIDGE	2.00	EA	0.00	0.00
MPP	000537480	LCD BOARD	BCN/EQN, W/WINDOWS	7.00	EA	0.00	0.00
MPP	000537506	MODULE	RELAY	0.00	EA	299.52	0.00
MPP	000537522	CABLE	ACCELEROMETER	0.00	EA	1,264.64	0.00
MPP	000537548	CABLE	PROXIMITY, 8.5M	1.00	EA	134.16	134.16
MPP	000537563	PROXIMITER	USE W/5M CABLE 7200 SERIES	1.00	EA	1,035.84	1,035.84
MPP	000537589	PROXIMITOR	USE W/ 9M CABLE 7200 SERIES	1.00	EA	422.24	422.24
MPP	000537605	HOUSING ASSY	PROBE	0.00	EA	330.72	0.00
MPP	000537621	DETECTOR	SPOT THERMAL	2.00	EA	122.72	245.44
MPP	000537647	HEAD	SOLENOID CONTROL, 24 VDC	1.00	EA	144.37	144.37
MPP	000537662	HEAD	DISCHARGE	1.00	EA	176.38	176.38
MPP	000537688	DISCHARGE	FLEX. HOSE	1.00	EA	42.63	42.63
MPP	000537704	SWITCH	LINE PRESSURE, EXPLOSION PROOF	1.00	EA	36.40	36.40
MPP	000537720	INDICATOR	DISCHARGE, 3/4NPT, CO2	1.00	EA	144.37	144.37
MPP	000537746	BLOCK	CONTACT - SHALLOW	1.00	EA	16.52	16.52
MPP	000537761	DETECTOR	OPTICAL FLAME	1.00	EA	3,342.49	3,342.49
MPP	000537787	DETECTOR	SPOT THERMAL	2.00	EA	123.63	247.26
MPP	000537803	SWITCH	PRESSURE, 60 PSI, ASHCROFT	1.00	EA	0.00	0.00
MPP	000537829	FUSE	30A, 600V	10.00	EA	0.00	0.00
MPP	000537845	RELAY	LOCKOUT - ELECTROSWITCH	2.00	EA	0.00	0.00
MPP	000537860	RELAY	LOCKOUT - ELECTROSWITCH	2.00	EA	0.00	0.00
MPP	000537886	BREAKER	CIRCUIT, 150 AMP, 3 POLE	1.00	EA	0.00	0.00
MPP	000537902	LIMITER	CURRENT, 30-60 AMP, 3 POLE	2.00	EA	0.00	0.00
MPP	000537928	LIMITER	CURRENT, 60-100 AMP, 3 POLE	2.00	EA	926.58	1,853.15
MPP	000537944	PLATE ASSY	BALANCE / BOILER FEED PUMP - HORIZ.	1.00	EA	2,702.96	2,702.96
MPP	000537969	DISC	BALANCE / BOILER FEED PUMP - HORIZ.	1.00	EA	2,154.88	2,154.88
MPP	000537985	SHAFT	BOILER FEED PUMP - HORIZ	0.00	EA	4,469.92	0.00
MPP	000538009	BUSHING	STUFFING BOX - HORIZ. BFP	1.00	EA	506.25	506.25
MPP	000538025	FLINGER	BOILER FEED PUMP - HORIZ	2.00	EA	168.75	337.50
MPP	000538041	COVER	END / BOILER FEED PUMP - HORIZ	1.00	EA	877.09	877.09
MPP	000538066	SLEEVE	SPACING / BOILER FEED PUMP - HORIZ	1.00	EA	303.13	303.13
MPP	000538082	RING, CASING	BOILER FEED PUMP - HORIZ	1.00	EA	279.00	279.00
MPP	000538108	RING, CASING	BOILER FEED PUMP - HORIZ	1.00	EA	236.08	236.08
MPP	000538124	GASKET	BOILER FEED PUMP - HORIZ	4.00	EA	16.99	67.95
MPP	000538140	SLEEVE	BOILER FEED PUMP - HORIZ	1.00	EA	43.68	43.68
MPP	000538165	NUT	BOILER FEED PUMP - HORIZ	2.00	EA	27.09	54.18
MPP	000538181	RING	SPLIT / BOILER FEED PUMP - HORIZ	2.00	EA	565.63	1,131.26
MPP	000538207	RING	DIFFUSER WEAR / BOIL FEED PUMP, HORIZ	7.00	EA	147.92	1,035.44
MPP	000538223	PIPE ASSY	COOLING / BOILER FEED PUMP, HORIZ	1.00	EA	346.88	346.88
MPP	000538249	RING	RETAINING / BOILER FEED PUMP, HORIZ	1.00	EA	702.08	702.08
MPP	000538264	COLLAR	BEARING LOCK / BOILER FEED PUMP, HORIZ	0.00	EA	133.33	0.00
MPP	000538280	SLEEVE	ADAPTER / BOILER FEED PUMP, HORIZ	0.00	EA	334.38	0.00
MPP	000538306	ORING	BOILER FEED PUMP, HORIZ	3.00	EA	56.16	168.48
MPP	000538322	ORING	BOILER FEED PUMP, HORIZ	4.00	EA	46.00	184.00
MPP	000538348	ORING	BOILER FEED PUMP, HORIZ	1.00	EA	68.64	68.64
MPP	000538363	ORING	BOILER FEED PUMP, HORIZ	1.00	EA	26.00	26.00
MPP	000538389	EXTENSION	SHAFT / BOILER FEED PUMP, HORIZ	0.00	EA	264.16	0.00

NOTE: SOH - Stock on Hand

Source: DARS 3342 Report (as of 5/31/07)

Maui Electric Company, Limited

MATERIALS PHYSICAL INVENTORY
MAALAEA POWER PLANT

WH	STOCK CODE	Item	Description	SOH	Unit	Price/ Unit	Total Cost/ Item
MPP	000538405	SLEEVE	SPACE / BOILER FEED PUMP, HORIZ	1.00	EA	278.72	278.72
MPP	000538421	COVER	END / BOILER FEED PUMP, HORIZ	0.00	EA	760.42	0.00
MPP	000538447	SEAL, MECHANICAL	M-14 BOILER FEED PUMP, HORIZ	5.00	EA	1,050.07	5,250.37
MPP	000538462	VALVE	3-WAY, ASCO	2.00	EA	466.48	932.96
MPP	000538488	SEAL	MECHANICAL, 1-1/2"	2.00	EA	312.50	625.00
MPP	000538504	VALVE	SHUTTLE, 1", IR AIR COMPRESSOR/DRYER	1.00	EA	1,952.11	1,952.11
MPP	000538520	SEAL	W/SLEEVE F.W. PUMP	6.00	EA	158.32	949.94
MPP	000538546	SEAL	DIESEL OIL TRANSFER PUMP, 1.125"	1.00	EA	0.00	0.00
MPP	000538561	SCREW	PHILLIPS - COMPRESSOR "A"	11.00	EA	0.00	0.00
MPP	000538587	SCREW	FLAT - COMPRESSOR	8.00	EA	0.00	0.00
MPP	000538603	FLINGER	PUMP END / DIMIN WATER TRANSFER PUMP	2.00	EA	5.98	11.96
MPP	000538629	FLINGER	COUPLING END/DIMIN WATER TRANSFER PUMP	3.00	EA	9.88	29.64
MPP	000538645	GLAND	MECH. SEAL FLUSH/DIMIN WATER TRANSFER	0.00	EA	573.82	0.00
MPP	000538660	SEAL	MECH/JOHN CRANE TYPE 9 SHFT DIA 1.125"	0.00	EA	299.20	0.00
MPP	000538686	SLEEVE	SHAFT /JOHN CRANE TYPE 9	1.00	EA	174.72	174.72
MPP	000538702	ORING	DIMINERALIZED WATER TRANSFER PUMP	5.00	EA	2.34	11.70
MPP	000538728	ORING	BEARING END COVER/DIMIN WTR TRANSFER	4.00	EA	2.34	9.36
MPP	000538744	GASKET	CASING / DIMIN WATER TRANSFER PUMP	5.00	EA	3.28	16.40
MPP	000538769	GASKET	MECH. SEAL GLAND /DIMIN WTR TRNSF PUMP	1.00	EA	4.84	4.84
MPP	000538785	LIP SEAL	PUMP END / DIMIN WATER TRANSFER PUMP	4.00	EA	5.46	21.84
MPP	000538801	LIP SEAL	COUPLING END /DIMIN WATER TRANSFER PUMP	4.00	EA	5.10	20.40
MPP	000538827	BEARING	THRUST /DIMIN WATER TRANSFER PUMP	1.00	EA	78.00	78.00
MPP	000538843	BEARING	RADIAL / DIMIN WATER TRANSFER PUMP	1.00	EA	28.08	28.08
MPP	000538868	CAGE	SEAL / DIMIN WATER TRANSFER PUMP	1.00	EA	31.20	31.20
MPP	000538884	RING & PACKING KIT	COMPRESSED AIR PACKAGE	3.00	EA	1,468.28	4,404.84
MPP	000538900	VALVE KIT	COMPRESSED AIR PACKAGE	3.00	EA	1,281.34	3,844.01
MPP	000538926	ELEMENT	FILTER - INLET, COMPRESSED AIR	7.00	EA	76.63	536.40
MPP	000538942	FILTER	OIL - COMPRESSED AIR	8.00	EA	15.30	122.39
MPP	000538967	WASHER	LOCK / COMPRESSED AIR	4.00	EA	23.19	92.76
MPP	000538983	RING	PISTON / COMPRESSED AIR	6.00	EA	115.27	691.62
MPP	000539007	STOP PLATE	INLET, COMPRESSED AIR	1.00	EA	469.42	469.42
MPP	000539023	INSERT	GUIDE / COMPRESSED AIR	4.00	EA	60.87	243.48
MPP	000539049	GASKET, OUTER HEAD	GRAPHITE / COMPRESSED AIR	5.00	EA	96.72	483.58
MPP	000539064	HOLDER	GUIDE / COMPRESSED AIR	6.00	EA	50.14	300.87
MPP	000539080	GASKET	COMPRESSED AIR PACKAGE	9.00	EA	103.89	934.97
MPP	000539106	GASKET	COVER / COMPRESSED AIR	12.00	EA	23.04	276.52
MPP	000539122	STOP PLATE	DISCHARGE / COMPRESSED AIR	4.00	EA	682.48	2,729.91
MPP	000539126	PORT PLATE	FRAME END	2.00	EA	1,920.74	3,841.48
MPP	000539148	ORING	COMPRESSED AIR PACKAGE	2.00	EA	3.56	7.12
MPP	000539163	RING	PISTON / COMPRESSED AIR	0.00	EA	35.53	0.00
MPP	000539166	NUT, CROSS HEAD JAM, TOP	INGERSOLL RAND COMPRESSOR, SIZE: 9 X 7	1.00	EA	0.00	0.00
MPP	000539169	NUT, CROSS HEAD JAM, BOTTOM	FOR INGERSOLL RAND COMPRESSOR, MODEL	1.00	EA	0.00	0.00
MPP	000539189	GASKET	GRAPHITE / COMPRESSED AIR	6.00	EA	99.32	595.93
MPP	000539205	GASKET	STUFFING BOX - COMPRESSED AIR	2.00	EA	0.00	0.00
MPP	000539221	REPAIR KIT	COMPRESSED AIR PACKAGE	1.00	EA	106.35	106.35
MPP	000539247	REPAIR KIT	PURGE VALVE/CONTROL AIR DRY COMPRESSOR	3.00	EA	248.21	744.64
MPP	000539262	COIL	SOLENOID/CONTROL AIR DRY COMPRESSOR	1.00	EA	98.54	98.54
MPP	000539288	REPAIR KIT	SHUTTLE VALVE/CNTRL AIR DRY COMPRESSOR	5.00	EA	65.10	325.52
MPP	000539304	TUBE	FINNED 36"/ STARTING AIR COMPRESSOR	1.00	EA	61.25	61.25
MPP	000539320	TUBE	FINNED 41-1/2"/ STARTING AIR COMPRESSOR	1.00	EA	65.58	65.58
MPP	000539346	TUBE	FINNED 37"/ STARTING AIR COMPRESSOR	1.00	EA	59.33	59.33
MPP	000539361	TUBE	AFTER COOLER/STARTING AIR COMPRESSOR	1.00	EA	170.49	170.49
MPP	000539363	RING, SCRAPER, ITEM #3-94	FOR INGERSOL RAND AIR COMPRESSOR 9 X 7	5.00	EA	22.87	114.37

NOTE: SOH - Stock on Hand

Source: DARS 3342 Report (as of 5/31/07)

Maui Electric Company, Limited

MATERIALS PHYSICAL INVENTORY
MAALAEA POWER PLANT

WH	STOCK CODE	Item	Description	SOH	Unit	Price/ Unit	Total Cost/ Item
MPP	000539365	CHANNEL & SPRING, INLET, ITEM 5-8	FOR INGERSOL RAND AIR COMPRESSOR	5.00	ST	59.47	297.37
MPP	000539367	CHANNEL & SPRING, OUTLET, ITEM 4-8	FOR INGERSOL RAND AIR COMPRESSOR	2.00	ST	81.21	162.43
MPP	000539369	RING, SCRAPER, ITEM 3-95	FOR INGERSOL RAND AIR COMPRESSOR	4.00	EA	34.31	137.24
MPP	000539371	RING, PACKING & SPRING SET	FOR INGERSOL RAND AIR COMPRESSOR	6.00	ST	70.32	421.90
MPP	000539373	GUIDE, CENTER HOLDER, ITEM 4-6	FOR INGERSOL RAND AIR COMPRESSOR	5.00	EA	0.00	0.00
MPP	000539387	TUBE	FINNED 38-3/4"/STARTING AIR COMPRESSOR	1.00	EA	0.00	0.00
MPP	000539403	BELT	DAYCO / COMPRESSED AIR PACKAGE	8.00	EA	55.71	445.69
MPP	000539429	SEAL	MECH/PAC, COMPRESSED AIR PACKAGE	1.00	EA	95.31	95.31
MPP	000539433	CARD, W 10 AMP RELAY INTERFACE ASSEMBLY	DWG.#8260-426	1.00	EA	0.00	0.00
MPP	000539435	CARD, DIGITAL SPEED SENSOR MODULE	ASSEMBLY, DWG.#8234-294	1.00	EA	0.00	0.00
MPP	000539437	CARD, DISCRETE OUTPUT ASSEMBLY,	DWG.#8234-293	1.00	EA	0.00	0.00
MPP	000539439	CARD, FUEL CONTROL MASTER COMPANY	PRO ASSEMBLY, DWG.#8234-293	1.00	EA	0.00	0.00
MPP	000539441	CARD, RVDT & LVDT SENSOR ASSEMBLY	DWG.#8234-294	1.00	EA	0.00	0.00
MPP	000539442	CARD, DCSII 8 CHANNEL RTD ASSEMBLY	DWG.#8234-296	1.00	EA	0.00	0.00
MPP	000539444	CARD, ISOLATION 4-20 MA INPUT ASSEMBLY	DWG.#8234-296	0.00	EA	0.00	0.00
MPP	000539445	CARD	THERMOCOUPLE / FUEL CONTROL	1.00	EA	0.00	0.00
MPP	000539446	CARD, ISOLATION 4-10 MA CURRENT OUTPUT	ASSEMBLY, DWG.#8234-295.	1.00	EA	0.00	0.00
MPP	000539448	CARD, DCS II POWER AUXILARY & SUPPLY	ASSEMBLY, DWG.#8234-295	1.00	EA	0.00	0.00
MPP	000539450	CARD, DCS II DISCRETE INPUT ASSEMBLY	DWG.#8234-294. FOR M-14 - M-16 CONTROL	1.00	EA	0.00	0.00
MPP	000539452	CARD, DCS DIGITAL SPEED SENSOR ASSEMBLY	DWG.#8234-294. FOR M-14 - M-16 CONTROL	1.00	EA	0.00	0.00
MPP	000539454	CARD, SECONDARY POWER SUPPLY ASSEMBLY	DWG.#8234-294. FOR M-14 - M-16 CONTROL	1.00	EA	0.00	0.00
MPP	000539456	CARD, DCS II POWER ASSEMBLY	DWG.#8234-294. FOR M-14 - M-16 CONTROL	1.00	EA	0.00	0.00
MPP	000539458	CARD, FUEL CONTROL MASTER CPU ASSEMBLY	DWG.#8234-294. FOR M-14 - M-16 CONTROL	1.00	EA	0.00	0.00
MPP	000539460	RELAY ASSY	MODULE	0.00	EA	0.00	0.00
MPP	000539462	CARD, DCS SEQUENCHER ASSEMBLY	DWG.#8234-296. FOR M-14 - M-16 CONTROL	0.00	EA	0.00	0.00
MPP	000539464	CARD, IFO BUFFER ASSEMBLY	DWG.#8234-296. FOR M-14 - M-16 CONTROL	1.00	EA	0.00	0.00
MPP	000539486	ELEMENT ASSY.	30"	6.00	EA	31.20	187.20
MPP	000539502	PRE-FILTER WRAP	CYLINDER 30" (VENTILATION SYSTEM)	103.00	EA	6.24	642.67
MPP	000539528	CRANK	ELEMENT 30" (VENTILATION SYSTEM)	0.00	EA	6.24	0.00
MPP	000539544	ELEMENT ASSY.	AIR INTAKE FILTER, 22"	300.00	EA	46.68	14,002.80
MPP	000539569	PRE-FILTER WRAP	CYLINDER 22" (VENTILATION SYSTEM)	103.00	EA	5.20	535.60
MPP	000539585	BELT	DAYCO	2.00	EA	12.16	24.32
MPP	000539601	SHEAVE	GATES	3.00	EA	103.03	309.09
MPP	000539627	BUSHING	BROWNING	2.00	EA	27.68	55.36
MPP	000539643	SHEAVE	BROWNING	1.00	EA	163.40	163.40
MPP	000539668	BUSHING	BROWNING	2.00	EA	25.17	50.33
MPP	000539684	SHEAVE	BROWNING	2.00	EA	110.86	221.71
MPP	000539700	BUSHING	BROWNING	1.00	EA	23.80	23.80
MPP	000539726	SHEAVE	BROWNING	3.00	EA	208.70	626.11
MPP	000539742	BELT	DAYCO	5.00	EA	119.25	596.25
MPP	000539767	BELT	DAY / AIR CONDITION UNIT	20.00	EA	12.91	258.10
MPP	000539783	BELT	BROWNING, 5 PER	5.00	EA	68.25	341.25
MPP	000539809	BELT	BROWNING, 4 PER	12.00	EA	34.23	410.70
MPP	000539825	BEARING	DODGE "E" 2-7/16", TURBINE ENCL FAN	2.00	EA	243.80	487.60
MPP	000539841	BEARING	DODGE "E" 1-15/16"	2.00	EA	192.66	385.32
MPP	000539866	BEARING	MOTOR, 5HP	1.00	EA	30.55	30.55
MPP	000539882	BEARING	MOTOR, 5HP	1.00	EA	21.55	21.55
MPP	000539908	BEARING	MOTOR, 40 HP	1.00	EA	130.38	130.38
MPP	000539924	BEARING	MOTOR, 40 HP	1.00	EA	73.18	73.18
MPP	000539940	BEARING	MOTOR, 200 HP	1.00	EA	140.78	140.78
MPP	000539965	BEARING	MOTOR, 200 HP	1.00	EA	255.22	255.22
MPP	000539981	ELEMENT	AIR FILTER	8.00	EA	44.95	359.60
MPP	000540005	BELT	GATES	0.00	EA	5.68	0.00
MPP	000540021	SWITCH	FLOW	0.00	EA	0.00	0.00
MPP	000540047	DETECTOR	RESISTANT TEMP - TURBINE ENCLOSE	2.00	EA	0.00	0.00
MPP	000540062	BOARD	CIRCUIT - TURBINE ENCLOSURE	4.00	EA	341.77	1,367.08
MPP	000540088	BOARD	CIRCUIT - GENERATOR ENCLOSURE	1.00	EA	338.00	338.00
MPP	000540104	BUSHING	GATES	2.00	EA	38.66	77.32
MPP	000540120	SHEAVE	BROWNING	3.00	EA	265.14	795.42
MPP	000540146	FILTER	EXTENDED LGTH	0.00	EA	8.03	0.00

NOTE: SOH - Stock on Hand

Source: DARS 3342 Report (as of 5/31/07)

Maui Electric Company, Limited

MATERIALS PHYSICAL INVENTORY
MAALAEA POWER PLANT

WH	STOCK CODE	Item	Description	SOH	Unit	Price/ Unit	Total Cost/ Item
MPP	000540161	WRAP	PREFILTER	3.00	EA	8.03	24.09
MPP	000540187	SEAL	DOOR - TURBINE ENCLOSURE	10.00	EA	0.00	0.00
MPP	000540203	SEAL	WESTECH - F.O. SUPPLY	3.00	EA	416.66	1,249.98
MPP	000540229	COUPLING SET	WOODS - LIQUID FUEL/WATER	0.00	EA	501.04	0.00
MPP	000540245	PUMP	BARE - 1-1/2"X1"X6", S/N 1296-3986	1.00	EA	3,073.97	3,073.97
MPP	000540260	PRE-FILTER	FUEL	0.00	EA	0.00	0.00
MPP	000540286	ELEMENT	FUEL, 8"	0.00	EA	104.70	0.00
MPP	000540302	VALVE	LIQUID FUEL	1.00	EA	0.00	0.00
MPP	000540328	HOSE ASSY	LIQ. FUEL PUMP DISCHARGE, 1-1/2" X 14"	1.00	EA	605.41	605.41
MPP	000540344	HOSE ASSY	LIQ. FUEL PUMP SUCTION, 2" X 14"	1.00	EA	452.17	452.17
MPP	000540369	HOSE ASSY	WATER INJ PUMP DISCHARGE, 1-1/2" X 14"	2.00	EA	416.00	832.00
MPP	000540385	HOSE ASSY	WATER INJ PUMP SUCTION, 2" X 14"	1.00	EA	361.67	361.67
MPP	000540401	HOSE ASSY	DEMIN. WATER SUPPLY, 1" X 14"	1.00	EA	318.07	318.07
MPP	000540427	HOSE ASSY	DEMIN. WATER, DISCHARGE, 1" X 10"	1.00	EA	312.19	312.19
MPP	000540443	HOSE ASSY	DEMIN. WATER	1.00	EA	318.07	318.07
MPP	000540468	HOSE ASSY	DEMIN. WATER SPLY TO ENG.TEFLON 5/8"X14"	1.00	EA	208.04	208.04
MPP	000540484	HOSE ASSY	LIQ. FUEL SUPPLY HYD. 1" X 12"	1.00	EA	54.29	54.29
MPP	000540500	HOSE ASSY	LIQ. FUEL BYPASS-HYD, 1" X 12"	1.00	EA	54.29	54.29
MPP	000540526	HOSE ASSY	CDP GAUGE LINE, 1/4" X 10"	1.00	EA	44.84	44.84
MPP	000540542	HOSE ASSY	GAUGE LINE TEFLON, 1/4" X 10"	1.00	EA	24.17	24.17
MPP	000540567	HOSE ASSY	TURBINE MIDFRAME VENT DISCH 1-1/2"X46"	1.00	EA	242.28	242.28
MPP	000540583	ORING	LIQUID FUEL VALVE	8.00	EA	2.00	16.00
MPP	000540609	ORING	LIQUID FUEL VALVE	6.00	EA	1.38	8.28
MPP	000540625	ORING	LIQUID FUEL VALVE	8.00	EA	2.11	16.88
MPP	000540641	GASKET	COVER, RING TYPE	8.00	EA	33.96	271.68
MPP	000540666	REPAIR KIT	ATKOMATIC VALVE	0.00	EA	201.00	0.00
MPP	000540682	DISC	ATCOMATIC VALVE	5.00	EA	6.14	30.70
MPP	000540708	RTD	FUEL TEMPERATURE	2.00	EA	0.00	0.00
MPP	000540724	SWITCH	LOW FUEL PRESSURE, 50 - 250 PSIG	5.00	EA	0.00	0.00
MPP	000540740	TRANSMITTER	FUEL - FLOW	3.00	EA	1,570.40	4,711.21
MPP	000540765	TRANSMITTER	WATER - FLOW	1.00	EA	2,587.97	2,587.97
MPP	000540781	SPIDER	LOVEJOY	16.00	EA	19.31	308.98
MPP	000540807	MODULE	LFA	5.00	EA	97.07	485.33
MPP	000540823	BEARING	FAFNIR - FUEL PUMP, H.P.	2.00	EA	58.76	117.52
MPP	000540849	MODULE	VTC, 100	3.00	EA	213.79	641.36
MPP	000540864	HOSE ASSY	FLANGE KIT, INTAKE, M-16, 2"X20-1/2"	2.00	EA	290.32	580.64
MPP	000540880	FUEL ASSY	H.P. W/FLANGE KIT (DISCHARGE) M-16	2.00	EA	0.00	0.00
MPP	000540906	KIT	CIRCUIT BOARD, POWER SUPPLY	1.00	EA	260.00	260.00
MPP	000540922	SWITCH	PRESSURE. NEO-DYN	2.00	EA	265.66	531.32
MPP	000540948	VALVE	COMMUTER	1.00	EA	145.51	145.51
MPP	000540963	ELEMENT	HYDRAULIC FUEL	32.00	EA	172.21	5,510.87
MPP	000540989	ELEMENT, FILTER, HYDRAULIC	TURBINE HYDRAULIC (STARTER) SYSTEM	35.00	EA	39.47	1,381.45
MPP	000541003	HOSE ASSY	MNFLD/RTN FLTR INLET 1-1/4" X 27-1/4"	1.00	EA	125.51	125.51
MPP	000541029	HOSE ASSY	EXTNL DSCHG/FLTR OUTLET 3/4" X 33-1/2"	1.00	EA	56.06	56.06
MPP	000541045	HOSE ASSY	PUMP SUCTION, 1-1/4" X 32"	1.00	EA	59.53	59.53
MPP	000541060	HOSE ASSY	FAN PUMP RELIEF/TANK, 3/4" X 50"	1.00	EA	62.36	62.36
MPP	000541086	HOSE ASSY	FAN PUMP SUCTION, 1" X 40"	1.00	EA	55.06	55.06
MPP	000541102	HOSE ASSY	AIR SUPPLY TO CLUTCH, 3/8" X 32"	1.00	EA	43.26	43.26
MPP	000541128	HOSE ASSY	PUMP CASE DSCHG/MNFLD BLOCK, 1" X 45"	1.00	EA	83.70	83.70
MPP	000541144	HOSE ASSY	COOLER BYPASS TO TANK, 1-1/4" X 44"	1.00	EA	66.36	66.36
MPP	000541169	HOSE ASSY	TURBINE HYD. SUPPLY/PUMP, 1/2" X 14"	1.00	EA	164.80	164.80
MPP	000541185	HOSE ASSY	TURBINE HYD. BYPASS 1/2" X 14"	1.00	EA	164.80	164.80
MPP	000541201	HOSE ASSY	TURBINE HYD. SUPPLY/FILTER 1/2" X 14"	1.00	EA	165.13	165.13
MPP	000541227	HOSE ASSY	STARTER CASE DRAIN, 1" X 14" TEFLON	1.00	EA	235.16	235.16
MPP	000541243	HOSE ASSY	STARTER SUPPLY, 1" X 37"	1.00	EA	173.26	173.26
MPP	000541268	HOSE ASSY	STARTER RETURN, 1" X 37"	1.00	EA	103.48	103.48
MPP	000541284	HOSE ASSY	MNFLD BLOCK/PUMP DSCHG, 1-1/4" X 34	1.00	EA	152.63	152.63
MPP	000541300	HOSE ASSY	MNFLD CASE DRAIN/FILTER 1-1/4" X 48"	1.00	EA	100.92	100.92
MPP	000541326	HOSE ASSY	PUMP CASE RELIEF/TANK, 1" X 34"	1.00	EA	70.60	70.60
MPP	000541342	HOSE ASSY	AUX. FAN PUMP/FAN MTR, 5/8" X 34"	1.00	EA	50.38	50.38
MPP	000541367	HOSE ASSY	COOLER TO TANK, 1-1/4" X 37"	1.00	EA	97.24	97.24
MPP	000541383	HOSE ASSY	FAN MOTOR DISCHARGE, 3/4" X 37"	1.00	EA	49.75	49.75
MPP	000541409	HOSE ASSY	RETURN FILTER OUTLET, 1-1/4" X 20-3/4"	1.00	EA	102.34	102.34
MPP	000541425	HOSE ASSY	CHARGE PUMP OUTLET/RTN FLTR 3/4" X 22"	1.00	EA	47.36	47.36
MPP	000541441	ELEMENT, FUEL 13"	ULTIPOR III 1320768	191.00	EA	164.46	31,412.76
MPP	000541466	INDICATOR	VISUAL	1.00	EA	43.44	43.44

NOTE: SOH - Stock on Hand

Source: DARS 3342 Report (as of 5/31/07)

Maui Electric Company, Limited

MATERIALS PHYSICAL INVENTORY
MAALAEA POWER PLANT

WH	STOCK CODE	Item	Description	SOH	Unit	Price/ Unit	Total Cost/ Item
MPP	000541482	FILTER	SCAVENGER & TURBINE L.O., 8"	37.00	EA	143.30	5,302.17
MPP	000541508	HOSE ASSY	TURBINE L.O. HEADER SUPPLY, 1" X 14"	1.00	EA	235.16	235.16
MPP	000541524	HOSE ASSY	TURBINE L.O. PUMP DISCHARGE, 1" X 14"	1.00	EA	235.16	235.16
MPP	000541540	HOSE ASSY	GAS GEN SCVNG OIL PUMP DISCHG 1-1/4" X	1.00	EA	403.37	403.37
MPP	000541565	HOSE ASSY	TURBINE LO SUPPLY 9" DROP 1-1/2" X 14"	1.00	EA	570.53	570.53
MPP	000541581	ELEMENT	DEMISTER, M-16	1.00	EA	378.43	378.43
MPP	000541607	ELEMENT	DEMISTER, WG. 278975	1.00	EA	886.50	886.50
MPP	000541623	HOSE ASSY	GENERATOR PUMP SUCTION, 2" X 14"	1.00	EA	183.50	183.50
MPP	000541649	HOSE ASSY	GENERATOR PUMP DISCHARGE, 1-1/2" X 14"	1.00	EA	158.06	158.06
MPP	000541664	HOSE ASSY	RUN DOWN TANK, 3/4" X 28"	1.00	EA	28.14	28.14
MPP	000541680	ELEMENT	DEMISTER	1.00	EA	1,466.40	1,466.40
MPP	000541706	SWITCH, PRESSURE	(GENERATOR L.O. SYS)	3.00	EA	222.45	667.35
MPP	000541722	COUPLING	PUMP MECH. SPEC 22MM	0.00	EA	301.95	0.00
MPP	000541748	PUMP	L/O, WEIR	4.00	EA	2,445.61	9,782.43
MPP	000541763	ELELEMT, L.O. 13"	GENERATOR L.O. SYSTEM	38.00	EA	164.28	6,242.64
MPP	000541789	ORING	VITON, ORH-239	3.00	EA	18.87	56.61
MPP	000541805	SEAL	ROD, 9640, VTIN	2.00	EA	34.60	69.20
MPP	000541821	RING	RETAINER, RS-93S	8.00	EA	1.00	8.00
MPP	000541847	SPACER	9640 PLATE INST	12.00	EA	2.59	31.08
MPP	000541862	ORING	VITON, ORH-908	33.00	EA	1.08	35.64
MPP	000541888	SEAL	RETAINER, HB9640-1D30	8.00	EA	9.22	73.76
MPP	000541904	RING	COMPRESSION, HA9640-2025S	5.00	EA	16.03	80.15
MPP	000541920	GUARD	SEAL	6.00	EA	21.46	128.76
MPP	000541946	ORING	VITON, ORH-134	7.00	EA	6.24	43.68
MPP	000541961	RING	BACK UP	6.00	EA	6.52	39.12
MPP	000541987	ORING	VITON, ORH-908	20.00	EA	3.18	63.60
MPP	000542001	ORING	VITON, ORH-139	4.00	EA	7.23	28.92
MPP	000542027	ORING	VITON, ORH-014	27.00	EA	1.00	27.00
MPP	000542043	RING	RETAINING, RR-168S	4.00	EA	2.00	8.00
MPP	000542068	SPIDER	DUPLEX FILTER, HB9640-1D6	6.00	EA	15.42	92.52
MPP	000542084	BUTTON	SCREW, 10-32 X .875	2.00	EA	0.39	0.78
MPP	000542100	BUTTON	SCREW, 10-32 X .625	2.00	EA	0.39	0.78
MPP	000542126	GUARD ASSY	INNER, 9640, VITON	6.00	EA	138.83	832.98
MPP	000542142	GUARD ASSY	OUTER	2.00	EA	175.12	350.24
MPP	000542167	PLUG	SEAL	4.00	EA	57.97	231.88
MPP	000542183	PLUG	SAE-4	4.00	EA	6.63	26.52
MPP	000542209	PLUG	SAE-8	4.00	EA	11.46	45.84
MPP	000542225	CAM	FOLLOWER	1.00	EA	32.76	32.76
MPP	000542241	ORING	VITON	7.00	EA	0.38	2.66
MPP	000542266	ORING	VITON	0.00	EA	0.00	0.00
MPP	000542282	RING	BACK UP	9.00	EA	6.90	62.10
MPP	000542308	SCREW	L,10-32 X .625	12.00	EA	0.42	5.04
MPP	000542310	O-RING, LUBE OIL FILTER	FOR DUPLES FILTER ASSEMBLY,	9.00	EA	0.00	0.00
MPP	000542312	O-RING, LUBE OIL FILTER	FOR DUPLEX FILTER ASSEMBLY, MODEL #9640	8.00	EA	0.16	1.27
MPP	000542324	KIT	GASKET, #12	1.00	EA	381.90	381.90
MPP	000542340	SHELL SET	CON ROD BEARING	12.00	EA	4.51	54.12
MPP	000542365	INSERT	STD - CYLINDER LINER	12.00	EA	2.68	32.16
MPP	000542381	GASKET KIT	CYLINDER HEAD OVERHAUL	0.00	EA	15.28	0.00
MPP	000542407	HEAD ASSY	CYLINDER, 3 - 92	1.00	EA	506.04	506.04
MPP	000542423	SHELL SET	STD - CRANKSHAFT, MAIN BRG	8.00	EA	6.09	48.72
MPP	000542449	ROD	PUSH	2.00	EA	2.06	4.12
MPP	000542464	SPRING	PUSH ROD	4.00	EA	1.63	6.52
MPP	000542480	SHAFT ASSY	ROCKER	2.00	EA	5.48	10.96
MPP	000542506	SEAT	PUSH ROD SPRING TYPE	9.00	EA	0.19	1.71
MPP	000542522	RETAINER	PUSH ROD	9.00	EA	0.14	1.26
MPP	000542548	FOLLOWER ASSY	CAM, W/ROLLER SET	9.00	EA	6.45	58.05
MPP	000542563	BRG. SET	CAM, STD, INTERMEDIATE	6.00	EA	8.99	53.94
MPP	000542589	VALVE KIT	EXHAUST	12.00	EA	8.93	107.16
MPP	000542605	CAP	EXH VALVE SPRING	12.00	EA	1.16	13.92
MPP	000542621	SEAT	EXHAUST VALVE SPRING	12.00	EA	0.08	0.96
MPP	000542647	GASKET	RKRCV / ROCKER COVER	4.00	EA	5.66	22.64
MPP	000542662	PUMP KIT	FUEL, L.H. 3/8" INLET, HIGH CAP	1.00	EA	74.54	74.54
MPP	000542688	ELEMENT	SPIN ON FUEL	54.00	EA	8.26	446.04
MPP	000542704	ELEMENT	SPIN ON FUEL	54.00	EA	10.02	541.08
MPP	000542720	PIPE ASSY	FUEL - SHORT	4.00	EA	2.71	10.84
MPP	000542746	PIPE ASSY	FUEL - LONG	4.00	EA	2.71	10.84

NOTE: SOH - Stock on Hand

Source: DARS 3342 Report (as of 5/31/07)

Maui Electric Company, Limited

MATERIALS PHYSICAL INVENTORY
MAALAEA POWER PLANT

WH	STOCK CODE	Item	Description	SOH	Unit	Price/ Unit	Total Cost/ Item
MPP	000542761	GASKET KIT	#18	2.00	EA	19.47	38.94
MPP	000542787	REPAIR KIT	BLACK START DIESEL	2.00	EA	94.12	188.24
MPP	000542803	FILTER	SPIN ON OIL	46.00	EA	7.02	322.92
MPP	000542829	ASSY	THERMOSTAT, 170 DEG. OPEN TEMP.	4.00	EA	17.55	70.20
MPP	000542845	SEAL	THERMOSTAT	4.00	EA	4.14	16.56
MPP	000542860	ELEMENT	FILTER	2.00	EA	70.72	141.44
MPP	000542886	WASHER	FLAT, FIG. 6	100.00	EA	0.00	0.00
MPP	000542902	WASHER	FLAT, FIG. 7	92.00	EA	0.00	0.00
MPP	000542928	NUT	S/L SPLN, FIG. 7	10.00	EA	6.60	65.99
MPP	000542944	BOLT	SHEAR, FIG. 6	5.00	EA	0.00	0.00
MPP	000542969	BOLT	SHEAR, FIG. 6	5.00	EA	0.00	0.00
MPP	000542985	BOLT	MACHINE, FIG. 6	0.00	EA	0.00	0.00
MPP	000543009	BOLT	BODY BOUND, FIG. 7	10.00	EA	0.00	0.00
MPP	000543025	NUT	S/L SPLN, FIG. 6	4.00	EA	0.00	0.00
MPP	000543041	COIL	ASCO SOLENOID	1.00	EA	0.00	0.00
MPP	000543066	NUT	S/L, FIG. 9,	5.00	EA	0.00	0.00
MPP	000543082	SWITCH	ASCO AUTO	0.00	EA	0.00	0.00
MPP	000543108	CRANK	BELL,	1.00	EA	0.00	0.00
MPP	000543124	BOLT	MACHINE FIG. 6	5.00	EA	0.00	0.00
MPP	000543140	BOLT	MACHINE FIG. 1	5.00	EA	0.00	0.00
MPP	000543165	PACKING	PREFORMED, 13.386	5.00	EA	23.15	115.75
MPP	000543181	NUT	PLAIN, FIG. 6	5.00	EA	0.00	0.00
MPP	000543207	NUT	PLAIN, FIG. 6	5.00	EA	0.00	0.00
MPP	000543223	WASHER	FLAT, FIG. 6	25.00	EA	0.00	0.00
MPP	000543249	WASHER	FLAT, FIG. 1	24.00	EA	0.00	0.00
MPP	000543264	LOCK	FIG. 6,	1.00	EA	0.00	0.00
MPP	000543280	NUT	PLAIN, FIG. 6	5.00	EA	0.00	0.00
MPP	000543306	BUSHING	FIG. 7,	1.00	EA	0.00	0.00
MPP	000543322	BEARING	SLOT, LD FIG. 7	5.00	EA	0.00	0.00
MPP	000543348	SPACER	ACT. FIG. 7	3.00	EA	0.00	0.00
MPP	000543363	BUSHING	ACTR. COMPRESS FIG. 7	1.00	EA	0.00	0.00
MPP	000543389	BUSHING	ACTR. COMPRESS FIG. 7	1.00	EA	0.00	0.00
MPP	000543405	BUSHING	LINED, FIG. 7	1.00	EA	0.00	0.00
MPP	000543421	BOLT	FIG. 41,	0.00	EA	0.00	0.00
MPP	000543447	BALL	SLOT, LD FIG. 7	5.00	EA	0.00	0.00
MPP	000543462	BALL	SLOT BRG. FIG. 7	1.00	EA	0.00	0.00
MPP	000543488	BALL	SLOT BRG. FIG. 7	3.00	EA	50.89	152.66
MPP	000543504	BEARING	BALL, FIG. 7	1.00	EA	0.00	0.00
MPP	000543520	BALL	SLOT BRG. FIG. 7	5.00	EA	0.00	0.00
MPP	000543546	BOOT	SEAL, FIG. 7	7.00	EA	4.94	34.60
MPP	000543561	WASHER	FLAT, FIG. 6	5.00	EA	0.00	0.00
MPP	000543587	ROD	PUSH, FIG. 7	5.00	EA	0.00	0.00
MPP	000543603	ROD	PUSH, FIG. 6	1.00	EA	0.00	0.00
MPP	000543629	GUIDE	ACTUATION LEVER, FIG. 6	5.00	EA	0.00	0.00
MPP	000543645	NUT	SLFLKG, FIG. 2	25.00	EA	0.00	0.00
MPP	000543660	BOLT	SHEAR, FIG. 6	5.00	EA	0.00	0.00
MPP	000543686	NUT	SLFLKG, FIG. 2	127.00	EA	4.26	541.08
MPP	000543702	NUT	S/L FIG. 6	23.00	EA	6.85	157.46
MPP	000543728	BOLT	SHOULDER, FIG. 6	25.00	EA	0.00	0.00
MPP	000543744	GASKET	SENSOR, FIG. 1	29.00	EA	9.21	267.15
MPP	000543769	LINK	VARIABLE, FIG. 6	1.00	EA	0.00	0.00
MPP	000543785	ACTUATOR	VARIABLE STATOR, FIG. 7	1.00	EA	0.00	0.00
MPP	000543801	WASHER	FLAT, FIG 20, STAGE 2	5.00	EA	0.00	0.00
MPP	000543827	PACKING	PREFORMED 2.227 FIG. 35	25.00	EA	0.00	0.00
MPP	000543843	BOLT	MACHINE, FIG. 35	10.00	EA	0.00	0.00
MPP	000543868	BOLT	MACHINE DBL HX HD O.190-32 X 0.875	48.00	EA	3.26	156.48
MPP	000543884	BOLT	MACHINE FIG.35	5.00	EA	0.00	0.00
MPP	000543900	GASKET	FIG. 35	3.00	EA	0.00	0.00
MPP	000543926	SHIM	PACKING FIG.35	4.00	EA	19.68	78.72
MPP	000543942	ORING	0.858 ID, FIG. 35	9.00	EA	0.49	4.40
MPP	000543967	TRANSDUCER	FIG. 35	1.00	EA	10,291.84	10,291.84
MPP	000543983	NUT	ADJUSTABLE FIG. 35	6.00	EA	25.55	153.27
MPP	000544007	SPRING	FIG. 35	0.00	EA	0.00	0.00
MPP	000544023	GASKET	CLAD, FIG. 28	5.00	EA	8.23	41.13
MPP	000544049	NUT	SELF-LOCKING FIG. 18	49.00	EA	4.70	230.30
MPP	000544064	CLIP	RETAINING FIG.21 "P" SERIES	25.00	EA	0.00	0.00
MPP	000544080	BOLT	MACHINE FIG. 35	5.00	EA	0.00	0.00

NOTE: SOH - Stock on Hand

Source: DARS 3342 Report (as of 5/31/07)

Maui Electric Company, Limited

MATERIALS PHYSICAL INVENTORY
MAALAEA POWER PLANT

WH	STOCK CODE	Item	Description	SOH	Unit	Price/ Unit	Total Cost/ Item
MPP	000544106	MODULE	FTV	4.00	EA	154.96	619.83
MPP	000544122	SEAL	ROPE, FIG. 40, 1 1/8" x 38 FT	3.00	EA	443.89	1,331.68
MPP	000544148	WASHER	SST, FIG. 41	5.00	EA	0.00	0.00
MPP	000544163	WASHER	FLAT FIG. 41	84.00	EA	0.00	0.00
MPP	000544189	PACKING	PREFORMED FIG.45	29.00	EA	0.97	28.11
MPP	000544205	PACKING	PREFORMED FIG.45	9.00	EA	0.00	0.00
MPP	000544221	PACKING	PREFORMED FIG. 41	2.00	EA	0.00	0.00
MPP	000544247	PACKING	PREFORMED FIG.44	14.00	EA	12.74	178.36
MPP	000544262	GASKET	FIG. 44	15.00	EA	3.57	53.51
MPP	000544288	PACKING	PREFORMED FIG. 42	5.00	EA	0.00	0.00
MPP	000544304	PACKING	PREFORMED FIG. 45	5.00	EA	0.00	0.00
MPP	000544320	PACKING	PREFORMED FIG. 45	24.00	EA	0.92	21.99
MPP	000544346	BOLT	SHEAR, DBL HX HD 0.750-16, 4.620 LONG	1.00	EA	0.00	0.00
MPP	000544361	BOLT	SHEAR, DBL HX HD 0.750-16, 7.620 LONG	1.00	EA	0.00	0.00
MPP	000544387	SENSOR	ELECTRO MAGNETIC PICK-UP SPEED FIG. 41	2.00	EA	0.00	0.00
MPP	000544403	BEARING	ROD END L.H. THREAD	1.00	EA	0.00	0.00
MPP	000544429	CLAMP	LOOP, FIG. 42	5.00	EA	0.00	0.00
MPP	000544445	BOLT	MACHINE FIG. 44	5.00	EA	0.00	0.00
MPP	000544460	DEVICE	LOCKING FIG. 41	10.00	EA	0.00	0.00
MPP	000544486	BOLT	MACHINE FIG. 41	4.00	EA	0.00	0.00
MPP	000544502	NUT	PLAIN HEX FIG. 41	5.00	EA	0.00	0.00
MPP	000544528	NUT	PLAIN HEX FIG. 41	5.00	EA	0.00	0.00
MPP	000544544	SEAL	RETAINER FIG. 41	1.00	EA	0.00	0.00
MPP	000544569	RING	RETAINER FIG. 41	1.00	EA	0.00	0.00
MPP	000544585	GASKET	ADAPTER COVER, FIG. 41	22.00	EA	12.25	269.59
MPP	000544601	VALVE ASSY	AIR INLET, FIG. 41	0.00	EA	0.00	0.00
MPP	000544627	GASKET	ROUND FIG. 41	4.00	EA	0.00	0.00
MPP	000544643	NUT	S/L FIG. 41	5.00	EA	0.00	0.00
MPP	000544668	COVER, SEPARATOR	A/O FIG. 44	1.00	EA	2,990.00	2,990.00
MPP	000544684	CLAMP	LOOP FIG. 61	6.00	EA	2.60	15.60
MPP	000544700	PACKING	PREFORMED FIG.55	40.00	EA	0.42	16.80
MPP	000544726	LEAD	T/C FIG. 53	1.00	EA	0.00	0.00
MPP	000544742	LEAD	T/C FIG. 53	1.00	EA	0.00	0.00
MPP	000544767	HOSE ASSY	METAL BRAIDED	1.00	EA	0.00	0.00
MPP	000544783	NOZZLE	FUEL	4.00	EA	1,201.58	4,806.32
MPP	000544809	PACKING	PREFORMED FIG. 57	23.00	EA	3.79	87.17
MPP	000544825	PACKING	PREFORMED FIG. 57	46.00	EA	0.91	41.86
MPP	000544841	TUBE ASSY	FUEL, FIG. 57	8.00	EA	380.90	3,047.18
MPP	000544866	TUBE ASSY	FUEL FEEDER (PRIMARY) FIG. 57	8.00	EA	335.89	2,687.13
MPP	000544882	BOLT	MACHINE, FIG. 52	22.00	EA	1.32	29.03
MPP	000544908	BOLT	MACHINE, FIG. 55	5.00	EA	0.00	0.00
MPP	000544924	BOLT	MACHINE, FIG. 52	11.00	EA	1.24	13.62
MPP	000544940	NIPPLE	FIG. 55	6.00	EA	0.00	0.00
MPP	000544965	WASHER	FLAT, FIG. 61	5.00	EA	0.00	0.00
MPP	000544981	ADAPTER	IGNITER FIG. 61	1.00	EA	0.00	0.00
MPP	000545004	THERMOCOUPLE	TOP RHT	0.00	EA	0.00	0.00
MPP	000545020	HARNESS	TOP LFT	0.00	EA	0.00	0.00
MPP	000545046	THERMOCOUPLE	BOT. RHT FIG. 48	0.00	EA	0.00	0.00
MPP	000545061	HARNESS	BOT LFT	0.00	EA	0.00	0.00
MPP	000545087	IGNITER	PLUG	3.00	EA	1,763.74	5,291.23
MPP	000545103	SEAL	METAL RING FIG. 61	2.00	EA	0.00	0.00
MPP	000545129	CABLE	MAIN IGNITION	1.00	EA	2,062.32	2,062.32
MPP	000545145	SEAL, METAL RING, FIG. 54	(NATURAL GAS FUEL SYS)	155.00	EA	13.87	2,149.59
MPP	000545160	BRACKET ASSY	HINGED FIG. 57	6.00	EA	236.89	1,421.33
MPP	000545186	CLAMP	LOOP CUSHIONED FIG. 57	6.00	EA	6.01	36.06
MPP	000545190	COIL, ATKOMATIC VALVE	CT WATER WASH UNIT	1.00	EA	0.00	0.00
MPP	000545194	ASSEMBLY, SECONDARY RIGHT SIDE MANIFOLD	FOR LM2500 COMBUSTION TURBINE UNIT	0.00	EA	6,835.00	0.00
MPP	000545198	ASSEMBLY, SECONDARY LEFT SIDE MANIFOLD	FOR LM 2500 COMBUSTION TURBINE UNIT	0.00	EA	6,835.00	0.00
MPP	000545202	ELEMENT	FUEL FILTER	0.00	EA	0.00	0.00
MPP	000545228	CLAMP	LOOP FIG 87	5.00	EA	0.00	0.00
MPP	000545244	NUT	SELF LOCKING HEX FIG.72	6.00	EA	2.79	16.75
MPP	000545269	BOLT	MACHINE, FIG. 77	12.00	EA	1.14	13.62
MPP	000545285	CLAMP	LOOP, FIG. 78	6.00	EA	3.16	18.96
MPP	000545301	WASHER	SHOULDER FIG. 75	18.00	EA	0.08	1.44
MPP	000545327	CLAMP	LOOP, FIG. 75	8.00	EA	0.00	0.00

NOTE: SOH - Stock on Hand

Source: DARS 3342 Report (as of 5/31/07)

Maui Electric Company, Limited

MATERIALS PHYSICAL INVENTORY
MAALAEA POWER PLANT

WH	STOCK CODE	Item	Description	SOH	Unit	Price/ Unit	Total Cost/ Item
MPP	000545343	CLAMP	LOOP, FIG. 89	10.00	EA	0.00	0.00
MPP	000545368	CLAMP	COUPLING, 3-1/2"	6.00	EA	18.65	111.90
MPP	000545384	CLAMP	COUPLING, 3-1/2"	0.00	EA	16.23	0.00
MPP	000545400	CLAMP, LOOP CUSHIONED	1" TUBE DIA. FIG. 56	10.00	EA	0.00	0.00
MPP	000545426	CLAMP	EXHAUST, 5"	3.00	EA	35.00	105.00
MPP	000545442	CLAMP	EXHAUST, 6"	4.00	EA	27.84	111.36
MPP	000545467	CLAMP	LOOP	19.00	EA	0.00	0.00
MPP	000545483	CLAMP	EXHAUST, 3"	6.00	EA	91.86	551.16
MPP	000545509	CLAMP	EXHAUST, 4"	3.00	EA	62.77	188.31
MPP	000545525	CLAMP	LOOP, 1.250 INCH TUBE DIA, FIG.75	3.00	EA	0.00	0.00
MPP	000545541	CLAMP	EXHAUST, 4-1/2"	0.00	EA	4.68	0.00
MPP	000545566	CLAMP	EXHAUST, 2"	3.00	EA	20.94	62.82
MPP	000545582	CLAMP	LOOP, 1.500" TUBE DIA, FIG. 91	10.00	EA	8.99	89.90
MPP	000545608	CLAMP	EXHAUST, 3-1/2"	0.00	EA	4.35	0.00
MPP	000545624	FITTING	REDUCER FIG. 91	1.00	EA	0.00	0.00
MPP	000545640	CLAMP	LOOP, FIG. 78,	3.00	EA	12.48	37.44
MPP	000545665	CLAMP	EXHAUST, 1-1/2"	2.00	EA	269.57	539.14
MPP	000545681	GASKET	SEAL, FIG. 81	7.00	EA	9.60	67.20
MPP	000545707	GASKET	SEAL, FIG. 81	4.00	EA	0.00	0.00
MPP	000545723	PACKING	PREFORMED, FIG. 81	37.00	EA	3.03	112.09
MPP	000545749	PACKING	PREFORMED, FIG. 87	52.00	EA	0.35	18.19
MPP	000545764	PACKING	PREFORMED, FIG. 75	315.00	EA	0.66	208.37
MPP	000545780	PACKING	PREFORMED, FIG. 91	25.00	EA	0.00	0.00
MPP	000545806	PACKING	PREFORMED, FIG. 102	14.00	EA	3.60	50.40
MPP	000545822	HOSE ASSY	TUBE, FIG. 92	8.00	EA	0.00	0.00
MPP	000545848	VALVE	CHECK, FIG. 112	1.00	EA	0.00	0.00
MPP	000545863	VALVE	CHECK, FIG. 112	24.00	EA	0.00	0.00
MPP	000545889	VALVE	CHECK, FIG. 91	1.00	EA	0.00	0.00
MPP	000545905	HOSE ASSY	FTR FIG. 88	2.00	EA	459.18	918.36
MPP	000545921	CONTROL	VSV, FIG. 88	3.00	EA	0.00	0.00
MPP	000545947	DETECTOR	RESISTANT TRANSMITTER	1.00	EA	0.00	0.00
MPP	000545962	CLAMP	LOOP, FIG. 75	99.00	EA	0.30	29.70
MPP	000545988	CABLE	N2 SPEED SENSOR W/45 FT	1.00	EA	2,464.80	2,464.80
MPP	000546002	GASKET	METAL, ORING FIG. 74,	5.00	EA	0.00	0.00
MPP	000546028	RTD CABLE	INTEGRAL	2.00	EA	884.00	1,768.00
MPP	000546044	ADAPTER	BOSS	15.00	EA	51.71	775.66
MPP	000546069	GASKET	METAL, ORING FIG. 81	4.00	EA	0.00	0.00
MPP	000546085	ORING	ENG. PIPING, VITON	38.00	EA	0.66	25.14
MPP	000546101	GASKET	METAL, ORING FIG. 72	7.00	EA	10.92	76.44
MPP	000546127	GASKET	METAL, ORING FIG. 72	5.00	EA	0.00	0.00
MPP	000546143	GASKET	METAL, ORING FIG. 85	5.00	EA	0.00	0.00
MPP	000546168	BOLT	MACHINE, FIG. 75	0.00	EA	0.00	0.00
MPP	000546184	BOLT	MACHINE, FIG. 87	4.00	EA	0.00	0.00
MPP	000546200	BOLT	MACHINE, HEX HD FIG. 82	5.00	EA	0.00	0.00
MPP	000546226	BOLT	MACHINE, FIG. 73	8.00	EA	0.00	0.00
MPP	000546242	BOLT	MACHINE, FIG. 72	10.00	EA	0.00	0.00
MPP	000546267	BOLT	MACHINE, FIG. 89	5.00	EA	0.00	0.00
MPP	000546283	BOLT	MACHINE, FIG. 72	5.00	EA	0.00	0.00
MPP	000546309	BOLT	MACHINE, FIG. 81	11.00	EA	3.83	42.12
MPP	000546325	NIPPLE	TUBE, FIG. 88,	5.00	EA	0.00	0.00
MPP	000546341	ELBOW	TUBE, FIG. 88,	5.00	EA	0.00	0.00
MPP	000546366	PACKING	PREFORMED FIG. 88	10.00	EA	2.07	20.71
MPP	000546382	NIPPLE	TUBE, FIG. 88	5.00	EA	0.00	0.00
MPP	000546408	UNION	TUBE, FIG. 88	5.00	EA	0.00	0.00
MPP	000546424	GASKET	FUEL/OIL FLANGE SEAL FIG. 92	4.00	EA	0.00	0.00
MPP	000546440	GASKET	SEAL FIG. 91	5.00	EA	0.00	0.00
MPP	000546465	HOSE ASSY	G/B FIG. 91	1.00	EA	362.65	362.65
MPP	000546481	HOSE ASSY	LUBE FIG. 89	0.00	EA	0.00	0.00
MPP	000546507	HOSE ASSY	SCAVENGING FIG. 78	1.00	EA	0.00	0.00
MPP	000546523	HOSE ASSY	SCAVENGING FIG. 77	1.00	EA	0.00	0.00
MPP	000546549	HOSE ASSY	SCAVENGING FIG. 79	1.00	EA	0.00	0.00
MPP	000546564	HOSE ASSY	DRAIN LOW PRESSURE FIG. 92	1.00	EA	0.00	0.00
MPP	000546580	HOSE ASSY	FIG. 92	1.00	EA	458.74	458.74
MPP	000546606	HOSE ASSY	SUPPLY, FIG. 90	1.00	EA	0.00	0.00
MPP	000546622	HOSE ASSY	RETURN, FIG. 88	1.00	EA	0.00	0.00
MPP	000546648	HOSE ASSY	ROD END FIG. 88	1.00	EA	0.00	0.00
MPP	000546663	HOSE ASSY	HEAD END FIG. 88	1.00	EA	0.00	0.00

NOTE: SOH - Stock on Hand

Source: DARS 3342 Report (as of 5/31/07)

Maui Electric Company, Limited

MATERIALS PHYSICAL INVENTORY
MAALAEA POWER PLANT

WH	STOCK CODE	Item	Description	SOH	Unit	Price/ Unit	Total Cost/ Item
MPP	000546689	HOSE ASSY	SCAVENGING FIG. 91	1.00	EA	0.00	0.00
MPP	000546705	GASKET	METAL FIG. 81	4.00	EA	0.00	0.00
MPP	000546721	FITTING	REDUCER FIG. 89	1.00	EA	0.00	0.00
MPP	000546747	GASKET	SQUARE SEAL, FIG. 82	4.00	EA	0.00	0.00
MPP	000546762	GASKET	FIG. 79	6.00	EA	0.00	0.00
MPP	000546788	GASKET	ROUND SEAL, FIG. 81	8.00	EA	19.93	159.47
MPP	000546804	GASKET	SQUARE, FIG. 77	4.00	EA	0.00	0.00
MPP	000546820	GASKET ASSY	METAL, FIG. 74	14.00	EA	6.52	91.31
MPP	000546846	WASHER	SHOULDER FIG. 77	5.00	EA	0.00	0.00
MPP	000546861	CLAMP	PLAIN LOOP FIR. 81	5.00	EA	70.72	353.60
MPP	000546887	STRAP, RETAINING, 1.75", FIG. 72	MAALAEA UNITS 14 & 16, PUNA CT-3	7.00	EA	44.16	309.10
MPP	000546903	GASKET	SEAL, FIG. 132	4.00	EA	0.00	0.00
MPP	000546929	SCREEN	INLET FIG. 132	7.00	EA	394.19	2,759.33
MPP	000546945	TUBE ASSY	B SUMP SCAVENGE OIL, FIG. 132	1.00	EA	0.00	0.00
MPP	000546960	TUBE ASSY	C CUMP INLET PORT SCAVENGE, FIG. 132	1.00	EA	0.00	0.00
MPP	000546986	TUBE ASSY	TRANSFER GEARBOX SCAVENGE, FIG. 132	1.00	EA	0.00	0.00
MPP	000547000	TUBE ASSY	OIL FIG. 132	1.00	EA	0.00	0.00
MPP	000547026	PUMP ASSY	LUBE & SCAVENGE, FIG. 132	1.00	EA	0.00	0.00
MPP	000547042	CABLE	FEED, FIG. 135	2.00	EA	0.00	0.00
MPP	000547067	TUBE ASSY	LUBE DISCHARGE	1.00	EA	0.00	0.00
MPP	000547083	TUBE ASSY	OIL FIG. 132	1.00	EA	0.00	0.00
MPP	000547109	PLUG	MACHINE THREAD FIG. 132	2.00	EA	0.00	0.00
MPP	000547125	PACKING	PREFORMED ORING	10.00	EA	0.00	0.00
MPP	000547141	PACKING	PREFORMED ORING	4.00	EA	0.00	0.00
MPP	000547166	PACKING	PREFORMED ORING	14.00	EA	0.00	0.00
MPP	000547182	NUT	HEX	5.00	EA	0.00	0.00
MPP	000547208	NUT	LOCK FIG. 135	0.00	EA	0.00	0.00
MPP	000547224	GASKET	LUBE IN SEAL	5.00	EA	0.00	0.00
MPP	000547240	GASKET	LUBE IN SEAL	5.00	EA	0.00	0.00
MPP	000547265	BOLT	BODY FIG. 135	2.00	EA	0.00	0.00
MPP	000547281	BOLT	BODY FIG. 135	3.00	EA	0.00	0.00
MPP	000547307	ACCELEROMETER	FIG. 130	1.00	EA	4,964.54	4,964.54
MPP	000547323	SHEAVE	DAYCO VOL VII	2.00	EA	47.56	95.13
MPP	000547349	BUSHING	WOODS VOL	2.00	EA	12.47	24.95
MPP	000547364	BELT	DAYCO VOL VII	7.00	EA	10.90	76.30
MPP	000547380	RING	RETAINING	0.00	EA	3.13	0.00
MPP	000547406	KEY	VERTICAL TURBINE PUMP	0.00	EA	47.91	0.00
MPP	000547422	SHAFT	LINE	0.00	EA	2,439.43	0.00
MPP	000547448	BEARING	STF BOX	0.00	EA	311.44	0.00
MPP	000547463	BEARING	TOP BOWL	0.00	EA	344.77	0.00
MPP	000547489	BEARING	BOWL - INTERMEDIATE	0.00	EA	191.65	0.00
MPP	000547505	BEARING	SUCTION CASE	0.00	EA	287.48	0.00
MPP	000547521	ORING	VERTICAL TURBINE PUMP	0.00	EA	7.03	0.00
MPP	000547547	RING	SNAP	0.00	EA	11.72	0.00
MPP	000547562	DRIVER	COLLET	0.00	EA	360.39	0.00
MPP	000547588	PLUG	POSITIONING	0.00	EA	203.11	0.00
MPP	000547604	COUPLING	TORSION	0.00	EA	405.18	0.00
MPP	000547620	BRACKET	BEARING	0.00	EA	474.97	0.00
MPP	000547646	PIPE	COLUMN	0.00	EA	2,069.63	0.00
MPP	000547661	HEADSHAFT	WITH SLEEVE	0.00	EA	2,563.38	0.00
MPP	000547687	SLEEVE	VERTICAL TURBINE PUMP	0.00	EA	1,872.80	0.00
MPP	000547703	SHAFT	BEARING LINE	0.00	EA	201.03	0.00
MPP	000547729	BEARING	CUTLESS/BJ MARINE 1" X 1.375 x 4.00	0.00	EA	53.12	0.00
MPP	000547745	KIT	RGA BEARING	4.00	EA	1,005.16	4,020.65
MPP	000547760	BEARING	SLEEVE - STL RG	3.00	EA	294.29	882.86
MPP	000547786	BEARING	BUSHING, PEDESTAL RG	5.00	EA	536.12	2,680.59
MPP	000547802	ORING	ROTOR, RG & RO NITRILE	23.00	EA	19.01	437.12
MPP	000547828	SHIM	BEARING, RG .015" THICK	2.00	EA	4.00	8.00
MPP	000547844	ORING	VITON	18.00	EA	4.45	80.14
MPP	000547869	ORING	VITON	12.00	EA	7.28	87.36
MPP	000547885	BEARING	SKF-NU	2.00	EA	310.82	621.63
MPP	000547901	KIT	SEAL 3.25" CRB/CER	3.00	EA	2,436.85	7,310.55
MPP	000547927	CAP SCREW	PUT A286	48.00	EA	27.19	1,304.91
MPP	000547943	NUT	SELF-LOCKING DRIVE END	2.00	EA	16.07	32.14
MPP	000547968	NUT	SELF-LOCKING RTR END	2.00	EA	36.17	72.34
MPP	000547984	BEARING	ROTO-JET	4.00	EA	95.31	381.22
MPP	000548008	BEARING	ROTO-JET	3.00	EA	299.38	898.14

NOTE: SOH - Stock on Hand

Source: DARS 3342 Report (as of 5/31/07)

Maui Electric Company, Limited

MATERIALS PHYSICAL INVENTORY
MAALAEA POWER PLANT

WH	STOCK CODE	Item	Description	SOH	Unit	Price/ Unit	Total Cost/ Item
MPP	000548024	SEAL	(ROTO-JET PUMP)	0.00	EA	0.00	0.00
MPP	000548040	GASKET	MILWAUKEE GEAR MODEL 657603	3.00	ST	43.43	130.30
MPP	000548065	SPRING, WAVE	ROTO-JET PUMP MODEL RG111	8.00	EA	57.15	457.18
MPP	000548081	OIL SEAL	LIP GEARBOX , MILWAUKEE GEAR MODEL	2.00	EA	22.75	45.50
MPP	000548107	SEAL, EXCLUDER	GEAR RATIO: 1.1509 S/N 92M012	4.00	EA	62.69	250.78
MPP	000548123	BEARING	BALL, 55MM ANG CONTACT	2.00	EA	203.11	406.23
MPP	000548149	BEARING	BALL, 55MM DEEP GROOVE	4.00	EA	371.85	1,487.40
MPP	000548164	TRANSMITTER	RTD TEMPERATURE	1.00	EA	195.68	195.68
MPP	000548180	NUT	HEX	51.00	EA	0.62	31.62
MPP	000548206	SCREW	CAP	47.00	EA	1.36	63.92
MPP	000548222	SCREW	CAP	50.00	EA	1.46	73.00
MPP	000548248	COUPLING	LOVEJOY 1-1/2" BORE X 1-5/8" BORE	1.00	EA	0.00	0.00
MPP	000548263	REPAIR KIT	BALL VALVE	6.00	EA	26.10	156.60
MPP	000548289	VALVE	CHK, BALL, FPT 316 1.00	3.00	EA	113.44	340.32
MPP	000548305	VALVE	BALL, APOLLO	9.00	EA	41.81	376.29
MPP	000548321	KIT	SEAT & SEAL	2.00	EA	31.93	63.86
MPP	000548324	KIT, REPAIR	SVF BALL VALVE	4.00	EA	0.00	0.00
MPP	000548347	MODULE	COMMUNICATION	1.00	EA	0.00	0.00
MPP	000548362	GLIPD1P1 PH SENSOR, ENCAPSULATED W/ 10	FEET OF CABLE INTEGRAL PREAMP & EPOXY	4.00	EA	577.20	2,308.80
MPP	000548388	VALVE	RELIEF	1.00	EA	324.29	324.29
MPP	000548404	VALVE	BUTTERFLY W/ HANDLE	3.00	EA	179.57	538.71
MPP	000548420	VALVE	BUTTERFLY W/EPDM/STAINLESS STEEL	6.00	EA	247.57	1,485.40
MPP	000548446	SWITCH	LIMIT 3/4"	1.00	EA	503.09	503.09
MPP	000548461	SWITCH	LIMIT 1"	1.00	EA	658.29	658.29
MPP	000548487	DIAPHRAGM	ACTUATOR	8.00	EA	20.83	166.64
MPP	000548503	COMPRESSOR	WEIR	4.00	EA	10.42	41.68
MPP	000548529	SWITCH	LIMIT 3/4"	1.00	EA	251.03	251.03
MPP	000548545	COMPRESSOR	WEIR	4.00	EA	9.38	37.52
MPP	000548560	SWITCH	LIMIT	1.00	EA	911.11	911.11
MPP	000548586	DIAPHRAGM	ACTUATOR	4.00	EA	42.71	170.84
MPP	000548602	COMPRESSOR	WEIR	4.00	EA	18.75	75.00
MPP	000548628	ADDER	VALVE	2.00	EA	223.67	447.34
MPP	000548644	MOTOR	DEGASSIFIER	1.00	EA	180.64	180.64
MPP	000548669	FILTER	FLANDERS	1.00	EA	182.95	182.95
MPP	000548685	V-BELT	VENT FAN	6.00	EA	11.75	70.50
MPP	000548701	ORING	BUNA N	13.00	EA	8.47	110.11
MPP	000548727	CLAMP	V INSERT	11.00	EA	64.95	714.45
MPP	000548743	FILTER	CARTRIDGE	1,080.00	EA	7.64	8,254.76
MPP	000548768	GASKET	VICTAULIC, 2"	3.00	EA	6.58	19.73
MPP	000548784	VALVE	PILOT	4.00	EA	28.07	112.28
MPP	000548800	AIR VALVE	4-WAY SOLENOID OPERATED	6.00	EA	59.59	357.54
MPP	000548826	KIT	REPAIR	6.00	EA	14.38	86.28
MPP	000548842	PUMP ASSY	CHEMICAL	2.00	EA	685.07	1,370.13
MPP	000548867	KIT	REPAIR	0.00	EA	56.83	0.00
MPP	000548883	CHECK ASSY	INJECTION	1.00	EA	34.38	34.38
MPP	000548909	VALVE ASSY	FOOT	0.00	EA	26.04	0.00
MPP	000548925	VALVE	SUCTION	1.00	EA	18.44	18.44
MPP	000548941	VALVE	4-WAY	1.00	EA	39.59	39.59
MPP	000548966	TUBING	.25" ID	16.00	EA	6.88	110.08
MPP	000548982	BRACKET	STROKE ADJ.	1.00	EA	18.96	18.96
MPP	000549006	SHAFT ASSY	"A"	2.00	EA	9.05	18.10
MPP	000549022	REPAIR KIT	SOLENOID VALVE	2.00	EA	31.14	62.28
MPP	000549048	FILTER, AIR, 16" X 20" X 2",	FARR 30/30, (WATER TREATMENT)	56.00	EA	4.84	271.29
MPP	000549063	DIAPHRAGM	NEOPRENE	4.00	EA	18.72	74.88
MPP	000549089	FILTER	AIR	38.00	EA	6.23	236.74
MPP	000549105	DIAPHRAGM	NEOPRENE	4.00	EA	23.92	95.68
MPP	000549121	BEARING	RO SYSTEM	3.00	EA	25.46	76.38
MPP	000549147	DIAPHRAGM	NEOPRENE	1.00	EA	24.96	24.96
MPP	000549162	HEAD	0.9	1.00	EA	44.79	44.79
MPP	000549188	DIAPHRAGM	TFE	10.00	EA	65.85	658.50
MPP	000549204	FITTING	TUBE	3.00	EA	52.28	156.84
MPP	000549220	DIAPHRAGM	NEOPRENE	3.00	EA	16.64	49.92
MPP	000549246	FITTINGS	TUBE	4.00	EA	59.20	236.80
MPP	000549261	SEAL	GASKET	13.00	EA	10.08	131.03
MPP	000549287	DISC	0.9	1.00	EA	3.66	3.66
MPP	000549303	GREASE COMPOUND	BLK GRAPHITE, ANTI-SEIZE	13.00	EA	19.69	255.95

NOTE: SOH - Stock on Hand

Source: DARS 3342 Report (as of 5/31/07)

Maui Electric Company, Limited

MATERIALS PHYSICAL INVENTORY
MAALAEA POWER PLANT

WH	STOCK CODE	Item	Description	SOH	Unit	Price/ Unit	Total Cost/ Item
MPP	000549329	ACTUATOR	EMERSON W/SPECIAL DD INSERT	4.00	EA	433.31	1,733.22
MPP	000549345	KIT	REPAIR	0.00	EA	41.47	0.00
MPP	000549360	SCREW	10-24 X .75	0.00	EA	0.42	0.00
MPP	000549386	VALVE	BALL	3.00	EA	368.88	1,106.63
MPP	000549402	BALL	STAINLESS STEEL	2.00	EA	78.30	156.60
MPP	000549428	STEM	STAINLESS STEEL	2.00	EA	8.63	17.26
MPP	000549444	KIT	SERVICE	8.00	EA	19.00	151.99
MPP	000549469	VALVE	BALL	2.00	EA	327.06	654.13
MPP	000549485	BALL	STAINLESS STEEL	1.00	EA	36.50	36.50
MPP	000549501	SEAT	VALVE	6.00	EA	8.65	51.90
MPP	000549527	KIT	SERVICE	2.00	EA	12.48	24.96
MPP	000549543	VALVE	BALL	3.00	EA	125.75	377.24
MPP	000549568	BALL	STAINLESS STEEL	2.00	EA	13.11	26.22
MPP	000549584	STEM	STAINLESS STEEL	3.00	EA	4.89	14.67
MPP	000549600	KIT	SERVICE	3.00	EA	4.84	14.52
MPP	000549626	VALVE	BALL	8.00	EA	108.66	869.28
MPP	000549642	VALVE	BUTTERFLY	3.00	EA	850.24	2,550.72
MPP	000549667	SWITCH ASSY	LIMIT	1.00	EA	0.00	0.00
MPP	000549683	SWITCH ASSY	MECHANICAL	4.00	EA	0.00	0.00
MPP	000549709	ELEMENT	FILTER (DOLLINGER)	4.00	EA	625.54	2,502.16
MPP	000549725	GASKET, TANK	BUNA "N" ORING 180 PSI 200 DEGREE	10.00	EA	31.35	313.52
MPP	000549741	BODY	SOLENOID VALVE	0.00	EA	64.07	0.00
MPP	000549766	TRANSMITTER	PRESSURE	7.00	EA	280.42	1,962.94
MPP	000549782	TRANSMITTER	PRESSURE	1.00	EA	180.44	180.44
MPP	000549808	TRANSMITTER	PRESSURE	7.00	EA	281.45	1,970.15
MPP	000549824	MOTOR	DAYTON 1/20HP,1550RPM,115VAC CHEM/SKID	3.00	EA	38.69	116.06
MPP	000549840	GLASS	SIGHT	1.00	EA	243.77	243.77
MPP	000549865	GASKET	SIGHTGLASS	6.00	EA	42.06	252.36
MPP	000549881	KIT	REPAIR	9.00	EA	12.24	110.16
MPP	000549907	KIT	REPAIR (ASCO)	3.00	EA	66.25	198.74
MPP	000549923	KIT	REPAIR (ASCO)	2.00	EA	0.00	0.00
MPP	000549949	KIT	REPAIR (ASCO)	2.00	EA	85.82	171.64
MPP	000549964	CART. ASSY	SUCTION	1.00	EA	0.00	0.00
MPP	000549980	CART. ASSY	DISCHARGE	1.00	EA	0.00	0.00
MPP	000550004	COIL	SOLENOID VALVE	2.00	EA	118.56	237.12
MPP	000550020	VALVE	BUTTERFLY	0.00	EA	997.36	0.00
MPP	000550046	VALVE	CHECK	0.00	EA	517.14	0.00
MPP	000550061	REGULATOR	PRESSURE	5.00	EA	73.40	367.00
MPP	000550087	COUPLING	DRIVE	1.00	EA	0.00	0.00
MPP	000550103	GASKET	VICTAULIC	8.00	EA	6.16	49.30
MPP	000550129	FLEXIBLE COUPLING, 3"	STYLE 77 STANDARD	6.00	EA	26.21	157.24
MPP	000550145	VALVE	SOLENOID	1.00	EA	0.00	0.00
MPP	000550150	O-RING	OSMONICS SEPRALATOR	52.00	EA	1.58	82.16
MPP	000550160	MEMBRANES	DOW FILMTEC W/ADAPTER SEALS	30.00	EA	676.00	20,280.00
MPP	000550186	COMPRESSOR	ZINC	0.00	EA	12.51	0.00
MPP	000550202	PIN	COMPRESSOR	4.00	EA	2.09	8.36
MPP	000550228	NUT	TUBE	4.00	EA	5.21	20.84
MPP	000550244	KIT	REPAIR (DIAPHRAGM/BACKING CUSHION)	4.00	EA	71.95	287.80
MPP	000550269	SEAL	CONCENTRATES	24.00	EA	48.69	1,168.48
MPP	000550285	SEAL	MECHANICAL	3.00	EA	31.66	94.98
MPP	000550301	ORING	VITON	16.00	EA	3.32	53.14
MPP	000550327	SEAL	OIL	7.00	EA	8.45	59.13
MPP	000550343	SEAL	OIL	5.00	EA	4.65	23.24
MPP	000550368	BEARING	TAPER	4.00	EA	33.75	135.00
MPP	000550384	BEARING	TAPER	4.00	EA	16.64	66.54
MPP	000550400	BEARING	JOURNAL	10.00	EA	0.00	0.00
MPP	000550426	DIFFUSER	TONKA FLOW	8.00	EA	0.00	0.00
MPP	000550442	IMPELLER	TONKA FLOW	9.00	EA	0.00	0.00
MPP	000550467	PLATE	DIFFUSER	10.00	EA	0.00	0.00
MPP	000550483	WASHER	THRUST	8.00	EA	0.00	0.00
MPP	000550509	VALVE	APOLLO BALL	3.00	EA	103.09	309.27
MPP	000550525	ORING	VITON	8.00	EA	10.22	81.76
MPP	000550541	VALVE	DIAPHRAGM	2.00	EA	854.11	1,708.22
MPP	000550566	ACTUATOR	PNEUMATIC	1.00	EA	1,126.17	1,126.17
MPP	000550582	VALVE	BUTTERFLY, KEYSTONE	1.00	EA	168.75	168.75
MPP	000550608	VALVE	BUTTERFLY, KEYSTONE	1.00	EA	138.54	138.54
MPP	000550624	VALVE	BUTTERFLY, KEYSTONE	1.00	EA	111.46	111.46

NOTE: SOH - Stock on Hand

Source: DARS 3342 Report (as of 5/31/07)

Maui Electric Company, Limited

MATERIALS PHYSICAL INVENTORY
MAALAEA POWER PLANT

WH	STOCK CODE	Item	Description	SOH	Unit	Price/ Unit	Total Cost/ Item
MPP	000550640	BEARING	BALL	2.00	EA	41.54	83.08
MPP	000550665	RACE	BALL	2.00	EA	17.23	34.46
MPP	000550681	BUSH	BEARING	1.00	EA	33,199.08	33,199.08
MPP	000550707	BUSH	BEARING	1.00	EA	33,199.08	33,199.08
MPP	000550723	RING	SHAFT SEAL	10.00	EA	3,232.99	32,329.90
MPP	000550749	TUBE	INSULATION	45.00	EA	26.62	1,197.90
MPP	000550764	WASHER	INSULATION	40.00	EA	26.60	1,064.00
MPP	000550780	GASKET	GENERATOR	4.00	EA	829.64	3,318.56
MPP	000550806	HEATER	FINNED	6.00	EA	311.15	1,866.90
MPP	000550822	HEATER	EXCITER	1.00	EA	384.80	384.80
MPP	000550848	HOLDER	BRUSH	2.00	EA	170.53	341.06
MPP	000550863	BRUSH	EARTHING	10.00	EA	87.58	875.80
MPP	000550889	DIODE	RECTIFIER	9.00	EA	779.16	7,012.43
MPP	000550905	DIODE	RECTIFIER	7.00	EA	754.77	5,283.38
MPP	000550921	FUSE	315 SBMT	9.00	EA	126.37	1,137.33
MPP	000550947	PROBE	HI PRESSURE	0.00	EA	864.58	0.00
MPP	000550962	BLADE	FAN - TORIN	1.00	EA	93.55	93.55
MPP	000550988	BELT	DAYCO - GENERATOR	7.00	EA	13.08	91.53
MPP	000551002	BOLT & NUT SET	ZURN	1.00	ST	7,280.00	7,280.00
MPP	000551028	BEARING	SEALMASTER	4.00	EA	111.97	447.88
MPP	000551044	PLATE	LOCKING	0.00	EA	0.00	0.00
MPP	000551069	PLATE	LOCKING	3.00	EA	0.00	0.00
MPP	000551085	PLATE	LOCKING	0.00	EA	0.00	0.00
MPP	000551101	PLATE	LOCKING	4.00	EA	0.00	0.00
MPP	000551127	BOLT	HEX	45.00	EA	24.66	1,109.70
MPP	000551143	BOLT	HEX	48.00	EA	30.87	1,481.63
MPP	000551168	NUT	HEX	100.00	EA	9.36	936.00
MPP	000551184	MONITOR	VOLTAGE CD	1.00	EA	0.00	0.00
MPP	000551200	CONTROL ASSY	PF CD	1.00	EA	4,160.00	4,160.00
MPP	000551226	CARD	CONTROL	1.00	EA	2,347.61	2,347.61
MPP	000551242	CARD	EXCITER MONITOR	1.00	EA	0.00	0.00
MPP	000551267	CARD	AUTO POWER	1.00	EA	0.00	0.00
MPP	000551283	RELAY	VP/2	2.00	EA	0.00	0.00
MPP	000551309	FUSE	500MA SIZE 0	4.00	EA	0.00	0.00
MPP	000551325	FUSE	A SIZE 0	4.00	EA	0.00	0.00
MPP	000551341	FUSE	20ET	4.00	EA	0.00	0.00
MPP	000551366	UNIT	POTENTIOMETER DRIVE	1.00	EA	0.00	0.00
MPP	000551382	POTENTIOMETER	500R + 500R	1.00	EA	0.00	0.00
MPP	000551408	BOARD	ELEC. CONTROL	1.00	EA	0.00	0.00
MPP	000551424	FUSE	4F21	4.00	EA	0.00	0.00
MPP	000551440	FUSE	250MA SIZE 0	4.00	EA	0.00	0.00
MPP	000551465	BRIDGE	ENCAPSULATED	1.00	EA	0.00	0.00
MPP	000551481	THYRISTOR	GENERATOR	1.00	EA	0.00	0.00
MPP	000551507	RELAY	125VDC 30	1.00	EA	0.00	0.00
MPP	000551523	ASSY	EX. LIMITER B	1.00	EA	0.00	0.00
MPP	000551549	DIAPHRAGM	MOD: EFR-135-73	4.00	EA	26.77	107.08
MPP	000551564	CARTRIDGE ASSY	SUCTION	4.00	EA	172.54	690.16
MPP	000551580	CARTRIDGE ASSY	DISCHARGE	5.00	EA	216.36	1,081.80
MPP	000551606	ORING	MOD: EFR-135-73	17.00	EA	2.44	41.48
MPP	000551622	ORING	MOD: EFR-135-73	18.00	EA	2.24	40.32
MPP	000551648	RING	MOD: EFR-135-73	31.00	EA	2.33	72.23
MPP	000551663	BOARD	PC MOD: PPRW212RMH	1.00	EA	1,023.44	1,023.44
MPP	000551689	KIT	OVERHAUL	1.00	EA	697.95	697.95
MPP	000551705	KIT	OVERHAUL	1.00	EA	428.52	428.52
MPP	000551721	JOINT	BELT PAPCO	1.00	EA	2,532.40	2,532.40
MPP	000551747	NUT	LOCK	96.00	EA	0.87	83.52
MPP	000551762	PILLOW, INSULATION	SILICA CASE	2.00	EA	2,356.64	4,713.28
MPP	000551788	BOLT	HEX HD	0.00	EA	2.12	0.00
MPP	000551804	BOLT	HEX	96.00	EA	1.19	114.24
MPP	000551820	NUT	STOP HEX	92.00	EA	0.42	38.64
MPP	000551846	CAP SCREW	HEX HEAD	47.00	EA	0.71	33.37
MPP	000551861	NUT	HEX S/S	100.00	EA	0.47	46.87
MPP	000551887	WASHER	LOCK	100.00	EA	0.32	32.00
MPP	000551903	JOINT	BELT PAPCO	1.00	EA	1,463.28	1,463.28
MPP	000551929	PILLOW	3" INSULATION	1.00	EA	1,010.88	1,010.88
MPP	000551945	THERMOCOUPLE	3' PROBE	1.00	EA	0.00	0.00
MPP	000551960	JOINT	TEXFLEX	0.00	EA	11,861.42	0.00

NOTE: SOH - Stock on Hand

Source: DARS 3342 Report (as of 5/31/07)

Maui Electric Company, Limited

MATERIALS PHYSICAL INVENTORY
MAALAEA POWER PLANT

WH	STOCK CODE	Item	Description	SOH	Unit	Price/ Unit	Total Cost/ Item
MPP	000551986	PIPE	WELDED	60.00	FT	4.34	260.40
MPP	000552000	PIPE	WELDED	20.00	FT	4.43	88.61
MPP	000552026	CLEANER	COMP.	0.00	EA	552.44	0.00
MPP	000552042	BELT	STEAM TURBINE	3.00	EA	8.62	25.86
MPP	000552045	BELT, DAYCO	FOR GLEGG R.O. VENT FAN	5.00	EA	26.27	131.34
MPP	000552067	SCREW	PAN HD	24.00	EA	33.89	813.36
MPP	000552083	ORING	HALF METAL	1.00	EA	65.53	65.53
MPP	000552109	BOLT	STUD	2.00	EA	23.09	46.18
MPP	000552125	BOLT	STUD	1.00	EA	46.17	46.17
MPP	000552141	NUT	EXTENSION	2.00	EA	23.09	46.18
MPP	000552166	NUT	EXTENSION	1.00	EA	46.17	46.17
MPP	000552182	WASHER	SPECIAL	4.00	EA	11.54	46.16
MPP	000552208	WASHER	SPECIAL	2.00	EA	23.09	46.18
MPP	000552224	NUT	HEX, M60X4, H=D	1.00	EA	23.09	23.09
MPP	000552240	NUT	HEX, M56X4, H=D	1.00	EA	46.17	46.17
MPP	000552265	BOLT	STUD, M52X3X408	2.00	EA	23.09	46.18
MPP	000552281	NUT	EXTENSION, M52X3	4.00	EA	11.54	46.16
MPP	000552307	WASHER	SPECIAL, M52	8.00	EA	5.77	46.16
MPP	000552323	NUT	HEX, M52X3	2.00	EA	23.09	46.18
MPP	000552349	STUD	M52X3X320	2.00	EA	23.09	46.18
MPP	000552364	STUD	M33X110	2.00	EA	23.09	46.18
MPP	000552380	NUT	HEX, M33, H=D	2.00	EA	23.09	46.18
MPP	000552406	GASKET	SPIRAL WOUND	4.00	EA	45.76	183.04
MPP	000552422	METAL O RING	3.17X0.25 L=1700MM	3.00	EA	288.53	865.58
MPP	000552448	METAL O-RING	HP STEAM CHEST	2.00	EA	510.39	1,020.77
MPP	000552463	WIRE	LOCKING, MONEL 400	1.00	EA	803.77	803.77
MPP	000552489	RING	SEAL	1.00	EA	803.77	803.77
MPP	000552505	RING	SEAL	1.00	EA	803.77	803.77
MPP	000552521	RING	SEAL	1.00	EA	803.77	803.77
MPP	000552547	PIN	SEAL	12.00	EA	66.98	803.76
MPP	000552562	PIN	SEAL	8.00	EA	100.47	803.76
MPP	000552588	RING	SEAL	2.00	EA	401.89	803.78
MPP	000552604	SPRING	PRESSURE	76.00	EA	26.00	1,976.00
MPP	000552620	SPRING	PRESSURE	30.00	EA	26.00	780.00
MPP	000552646	SCREW	UNB, CRMO, M16 X 100	4.00	EA	78.08	312.32
MPP	000552661	SCREW	UNB, CRMO, M16 X 100	6.00	EA	52.05	312.30
MPP	000552687	SCREW	UNB, 8.8, M20 X 120	2.00	EA	156.16	312.32
MPP	000552703	PIN	SEAL RING	28.00	EA	108.31	3,032.68
MPP	000552729	RING	SEAL	4.00	EA	758.16	3,032.64
MPP	000552745	RING	SEAL	2.00	EA	1,516.32	3,032.64
MPP	000552760	RING	SEAL	1.00	EA	3,032.64	3,032.64
MPP	000552786	SPRING	HP LABYRINTH PACKING ASSY	60.00	EA	31.20	1,872.00
MPP	000552802	LAMEL	6 PARTS, 263/239	3.00	EA	13.87	41.61
MPP	000552828	LAMEL	8 PARTS, 263/233	3.00	EA	13.87	41.61
MPP	000552844	WIRE	LOCKING	0.00	EA	13.52	0.00
MPP	000552869	SCREW	UNB.	6.00	EA	11.61	69.66
MPP	000552885	SCREW	HEX, INSIDE	2.00	EA	352.04	704.08
MPP	000552901	PIN SET	CONICAL, 10X65	2.00	EA	22.36	44.72
MPP	000552927	NUT	HEX, 8, M10	6.00	EA	7.45	44.70
MPP	000552943	GASKET	KLINGERIT 1000	0.00	EA	100.88	0.00
MPP	000552968	BOLT	HEIGHTENED TENSION	6.00	EA	16.81	100.86
MPP	000552984	SCREW	UNB., CRMO, M12 X 45	12.00	EA	27.04	324.48
MPP	000553008	SCREW	UNB., CRMO, M12 X 60	12.00	EA	28.08	336.96
MPP	000553024	PIN SET	Conical	7.00	EA	52.97	370.80
MPP	000553040	RING	SEAL	3.00	EA	776.71	2,330.13
MPP	000553065	PIN	SEAL RING	12.00	EA	194.18	2,330.16
MPP	000553081	SPRING	LP LABYRINTH PACKING	0.00	EA	11.77	0.00
MPP	000553107	SEAL	6 PARTS, 323/299	2.00	EA	13.78	27.56
MPP	000553123	SEAL	8 PARTS, 323/293	3.00	EA	9.19	27.57
MPP	000553149	SEAL	6 PARTS, 263/239	2.00	EA	13.78	27.56
MPP	000553164	SEAL	8 PARTS, 263/233	1.00	EA	27.56	27.56
MPP	000553180	SEAL	8 PARTS, 323/299	2.00	EA	13.78	27.56
MPP	000553206	SEAL	6 PARTS, 323/293	3.00	EA	9.19	27.57
MPP	000553222	SEAL	8 PARTS, 263/239	2.00	EA	13.78	27.56
MPP	000553248	SEAL	6 PARTS, 263/233	1.00	EA	27.56	27.56
MPP	000553263	WIRE	LOCKING, MONEL 400	0.00	EA	38.31	0.00
MPP	000553289	WIRE	LOCKING, MONEL 400	0.00	EA	38.98	0.00

NOTE: SOH - Stock on Hand

Source: DARS 3342 Report (as of 5/31/07)

Maui Electric Company, Limited

MATERIALS PHYSICAL INVENTORY
MAALAEA POWER PLANT

WH	STOCK CODE	Item	Description	SOH	Unit	Price/ Unit	Total Cost/ Item
MPP	000553305	GASKET	SIGRAFLEX "HD", 1000, 2MM	3.00	EA	231.57	694.72
MPP	000553321	SCREW	UNB CRMO M20X60	15.00	EA	37.44	561.60
MPP	000553347	SCREW	HEX INSIDE	4.00	EA	37.44	149.76
MPP	000553362	SCREW	UNB CRMO M16 X 80	4.00	EA	37.44	149.76
MPP	000553388	PIN SET	CONICAL 10X65	2.00	EA	2.60	5.20
MPP	000553404	NUT	HEX 8M10	2.00	EA	2.60	5.20
MPP	000553420	PIN SET	CONICAL	2.00	EA	2.60	5.20
MPP	000553446	NUT	HEX 8M12	2.00	EA	2.60	5.20
MPP	000553461	RING	OIL RETAINING, 205/175	6.00	EA	31.00	186.00
MPP	000553487	RING	OIL RETAINING, 205/175	5.00	EA	31.20	156.00
MPP	000553503	PAD	JOURNAL, JPU, 160-122/BB	0.00	EA	401.79	0.00
MPP	000553529	PAD	JOURNAL, T/C HOLE, 160-122/BB	0.00	EA	602.68	0.00
MPP	000553545	PAD	THRUST, LH, OMEGA, 08061 NDL/HB1	0.00	EA	131.04	0.00
MPP	000553560	PAD	THRUST, LH, T/C HOLE	0.00	EA	393.12	0.00
MPP	000553586	PAD	THRUST, RH, OMEGA	0.00	EA	197.60	0.00
MPP	000553602	PAD	THRUST, RH, T/C HOLE	0.00	EA	197.60	0.00
MPP	000553628	PLATE	OIL DEFLECTOR	2.00	EA	192.92	385.84
MPP	000553644	PAD	JOURNAL, JPU	0.00	EA	267.86	0.00
MPP	000553669	PAD	JOURNAL, JPU, T/C HOLE	0.00	EA	803.57	0.00
MPP	000553685	PAD	JOURNAL, JPU, T/C HOLE	0.00	EA	803.57	0.00
MPP	000553701	PLATE	OIL DEFLECTOR	4.00	EA	193.18	772.72
MPP	000553727	RING	PACKING	0.00	EA	10.31	0.00
MPP	000553743	RING	BOTTOM, PACKING	2.00	EA	245.44	490.88
MPP	000553768	BUSHING	REGULATING VALVE	2.00	EA	249.60	499.20
MPP	000553784	BUSHING	GLACIER	4.00	EA	15.34	61.36
MPP	000553800	BUSHING	GLACIER	3.00	EA	20.45	61.35
MPP	000553826	BUSHING	GLACIER	2.00	EA	30.68	61.36
MPP	000553842	END	ROD (SPHERICAL/INSIDE THREAD)	1.00	EA	23.40	23.40
MPP	000553867	END	ROD (SPHERICAL/INSIDE LEFT THREAD)	1.00	EA	23.40	23.40
MPP	000553883	END	ROD (SPHERICAL/INSIDE THREAD)	1.00	EA	23.40	23.40
MPP	000553909	END	ROD (SPHERICAL)	1.00	EA	223.40	223.40
MPP	000553925	BUSHING	VALVE LINKAGE	2.00	EA	199.68	399.36
MPP	000553941	ACTUATOR	WOODWARD, EG-10PC	1.00	EA	8,125.52	8,125.52
MPP	000553966	CARD	ELECTRONIC	0.00	EA	1,421.10	0.00
MPP	000553982	CARD	ELECTRONIC	1.00	EA	1,421.10	1,421.10
MPP	000554006	CARD	ELECTRONIC	1.00	EA	1,421.10	1,421.10
MPP	000554022	CARD	ELECTRONIC	1.00	EA	1,421.10	1,421.10
MPP	000554048	CARD	ELECTRONIC	1.00	EA	1,421.10	1,421.10
MPP	000554063	CARD	ELECTRONIC	1.00	EA	1,421.10	1,421.10
MPP	000554089	CARD	ELECTRONIC	1.00	EA	1,421.10	1,421.10
MPP	000554105	CARD	ELECTRONIC	1.00	EA	1,421.10	1,421.10
MPP	000554121	CARD	ELECTRONIC	0.00	EA	1,421.12	0.00
MPP	000554147	SPRING	PRESSURE	1.00	EA	34.32	34.32
MPP	000554162	ELECTROMAGNET	"NASS"	1.00	EA	1,493.92	1,493.92
MPP	000554188	ROD	VALVE	1.00	EA	1,848.40	1,848.40
MPP	000554204	SEAT	MAIN VALVE	1.00	EA	1,333.28	1,333.28
MPP	000554220	SEAT	PILOT VALVE	1.00	EA	397.28	397.28
MPP	000554246	RING	PACKING	8.00	EA	10.66	85.28
MPP	000554261	RING	BOTTOM	1.00	EA	309.92	309.92
MPP	000554287	ORING	ID .130X4 + LOCKING WIRE (M60 X 4)	6.00	EA	139.99	839.93
MPP	000554303	ORING	ID .85X4 + LOCKING WIRE (M60 X 4)	7.00	EA	113.31	793.17
MPP	000554329	ORING	ID .112X4 + LOCKING RING (M52 X 3)	2.00	EA	269.10	538.20
MPP	000554345	ORING	ID .75X4 + LOCKING RING (M52 X 3)	2.00	EA	269.10	538.20
MPP	000554360	ORING	ID .122 X 4 + LOCKING RING (M56 X 4)	3.00	EA	27.60	82.81
MPP	000554386	ORING	ID .80 X 4 + LOCKING RING (M56 X 4)	3.00	EA	245.20	735.59
MPP	000554388	RING, SEAL, ALSTON POWER, SIZE: 14 X 20	FOR HYDRAULIC TENSIONER M60X4	20.00	EA	0.00	0.00
MPP	000554402	SWITCH	LIMIT	2.00	EA	49.92	99.84
MPP	000554428	ROPE	PACKING	0.00	EA	140.56	0.00
MPP	000554444	HOUSING	3300 SERIES	1.00	EA	381.68	381.68
MPP	000554469	PROBE, PROXIMITY	VIBRATION MONITOR SYSTEM	0.00	EA	179.92	0.00
MPP	000554485	PROXIMITOR	3300 SERIES	1.00	EA	265.20	265.20
MPP	000554501	CABLE	EXTENSION	2.00	EA	108.16	216.32
MPP	000554527	PROBE, PROXIMITY	VIBRATION MONITOR SYSTEM, 7200 series	1.00	EA	322.90	322.90
MPP	000554543	CABLE	EXTENSION	1.00	EA	256.23	256.23
MPP	000554568	ELEMENT, FILTER	2.04.5.110.260 DN50 10 MICRON	5.00	EA	558.37	2,791.85
MPP	000554584	RING, QUAD	72.4 X 5.33 VITON	0.00	EA	21.70	0.00
MPP	000554600	GASKET, COVER	88.5 X 3.53 2.04.5.110.260	0.00	EA	2.87	0.00

NOTE: SOH - Stock on Hand

Source: DARS 3342 Report (as of 5/31/07)

Maui Electric Company, Limited

MATERIALS PHYSICAL INVENTORY
MAALAEA POWER PLANT

WH	STOCK CODE	Item	Description	SOH	Unit	Price/ Unit	Total Cost/ Item
MPP	000554626	ELEMENT, FILTER	2.04.5.170.500 DN80 - 100 20 MICRON	4.00	EA	1,612.26	6,449.04
MPP	000554642	GASKET, COVER	81.9 X 5.33 2.04.5.170.500	0.00	EA	4.67	0.00
MPP	000554667	GASKET	O-RING	7.00	EA	30.44	213.08
MPP	000554683	COUPLING KIT	CLUTCH	0.00	EA	899.60	0.00
MPP	000554709	ORING	METAL	0.00	EA	0.00	0.00
MPP	000554725	SLEEVE	WOOD	4.00	EA	6.25	25.00
MPP	000554726	BEARING, THRUST, NDH 4520	FOR TURBINE DRAIN TANK PUMP, BEARING	2.00	EA	0.00	0.00
MPP	000554727	KIT, REPAIR	FOR CLOSED COUPLED CENTRIFUGAL MOTOR	3.00	EA	48.61	145.82
MPP	000554728	BEARING, BALL, LINE, ITEM #16	FOR TURBINE DRAIN TANK PUMP, BEARING	2.00	EA	0.00	0.00
MPP	000554729	SEAL/SEAT VITON, SIZE: 5/8" - T.6A	FOR CLOSED COUPLED CENTRIFUGAL MOTOR	3.00	EA	36.11	108.33
MPP	000554730	SLEEVE, SHAFT FR1, ITEM #14	FOR TURBINE DRAIN TANK PUMP, BEARING	1.00	EA	0.00	0.00
MPP	000554731	DEFLECTOR, SLING, 1-1/16, ITEM #40	FOR TURBINE DRAIN TANK PUMP, BEARING	2.00	EA	0.00	0.00
MPP	000554732	KEY, SHAFT SLEEVE (FRAME 1) ITEM #14A	.19 X .19 X .375	2.00	EA	0.00	0.00
MPP	000554733	RING, LANTERN, HALF, ITEM #29	FOR TURBINE DRAIN TANK PUMP, BEARING	2.00	EA	0.00	0.00
MPP	000554734	LOCKNUT, BEARING #6, ITEM #22	FOR TURBINE TANK PUMP - BEARING FRAME	2.00	EA	0.00	0.00
MPP	000554735	NUT, IMPELLER, 1/2 20 RH, ITEM #24	FOR TURBINE DRAIN TANK PUMP - BEARING	2.00	EA	0.00	0.00
MPP	000554736	IMPELLER, 4.94"	FOR CLOSED COUPLED CENTRIFUGAL MOTOR	1.00	EA	0.00	0.00
MPP	000554741	BEARING	BALL - AC PUMP	1.00	EA	293.28	293.28
MPP	000554766	SEAL RING	RADIAL SHAFT - AC PUMP	3.00	EA	49.57	148.71
MPP	000554782	BALL BEARING	DC PUMP BMG 26167 H92	1.00	EA	1,112.80	1,112.80
MPP	000554808	SEAL	OIL	1.00	EA	206.96	206.96
MPP	000554824	SET OF BUSHES	DC PUMP	1.00	EA	173.68	173.68
MPP	000554840	SEAL, GEAR	FOR FILTER TYPE 2.04.5 170.500	2.00	ST	72.91	145.82
MPP	000554865	STAR PLEATED ELEMENT	FOR FILTER 2.04.5 170.500	0.00	EA	1,895.71	0.00
MPP	000554881	SET OF SEALS / GEAR	FOR FILTER 2.04.5 110.260	1.00	EA	1,040.52	1,040.52
MPP	000554907	STAR PLEATED ELEMENT	FOR FILTER 2.04.5 110.260	1.00	EA	838.49	838.49
MPP	000554923	BEARING SET	REDUCTION GEAR	0.00	EA	44,260.32	0.00
MPP	000554949	PACKING SET	REDUCTION GEAR	0.00	EA	5,281.12	0.00
MPP	000554964	PACKING SET	OIL PUMP ON REDUCTION GEAR	0.00	EA	100.88	0.00
MPP	000554980	BEARING SET	OIL PUMP ON REDUCTION GEAR	0.00	EA	100.88	0.00
MPP	000555003	UNIT	SUPPLY	1.00	EA	2,067.52	2,067.52
MPP	000555029	UNIT	GATE CONTROL	1.00	EA	1,755.78	1,755.78
MPP	000555045	REGULATOR	VOLTAGE	1.00	EA	1,755.78	1,755.78
MPP	000555060	UNIT	REFERENCE	1.00	EA	1,755.78	1,755.78
MPP	000555086	UNIT	CHANGE CONTROL	1.00	EA	1,755.40	1,755.40
MPP	000555102	BEARING	LINERS JOURNAL	0.00	EA	1,172.13	0.00
MPP	000555128	WASHER	THRUST	1.00	EA	546.00	546.00
MPP	000555144	SEAL	SHAFT	4.00	EA	2,199.60	8,798.40
MPP	000555169	RING	OIL	1.00	EA	2,501.20	2,501.20
MPP	000555185	ISOLATION	BEARING	2.00	EA	91.00	182.00
MPP	000555201	DIODES	POSITIVE	3.00	EA	420.16	1,260.48
MPP	000555227	DIODES	NEGATIVE	3.00	EA	420.16	1,260.48
MPP	000555243	THYRISTOR	GENERATOR	2.00	EA	1,166.36	2,332.72
MPP	000555268	UNIT	TRIGGER PULSE	1.00	EA	1,340.56	1,340.56
MPP	000555284	HEATER	MOTOR	1.00	EA	416.00	416.00
MPP	000555300	HEATER	EXCITER	1.00	EA	208.00	208.00
MPP	000555326	BREAKER	AUX. CIRCUIT	1.00	EA	192.40	192.40
MPP	000555342	BREAKER	AUX. CIRCUIT	1.00	EA	156.00	156.00
MPP	000555367	CONTACT	AUXILIARY	1.00	EA	114.40	114.40
MPP	000555383	INDICATOR	GENERATOR	1.00	EA	322.40	322.40
MPP	000555409	INDICATOR	GENERATOR	1.00	EA	582.40	582.40
MPP	000555425	RELAY	AUXILIARY, 125 VDC	1.00	EA	109.20	109.20
MPP	000555441	RELAY, INDUSTRIAL	125 VDC, 4 pole, 3 N.O., 1 N.C. CONTACT	2.00	EA	62.92	125.83
MPP	000555466	PRD	DIODE ATTACHMENT	1.00	EA	31.20	31.20
MPP	000555482	RELAY	AUXILIARY, 125 VDC	1.00	EA	150.80	150.80
MPP	000555508	RELAY	AUXILIARY, 120 VAC	12.00	EA	78.00	936.00
MPP	000555524	RELAY	AUXILIARY, 120 VAC	2.00	EA	78.00	156.00
MPP	000555540	LAMP	INSTRUMENT	10.00	EA	5.20	52.00
MPP	000555565	PUMP	SCREW	0.00	EA	0.00	0.00
MPP	000555581	SHEAR	COUPLING	4.00	EA	48.57	194.27
MPP	000555607	SLEEVE	L.O. PURIFIER	1.00	EA	22.15	22.15
MPP	000555623	SLEEVE	L.O. PURIFIER	8.00	EA	96.10	768.78

NOTE: SOH - Stock on Hand

Source: DARS 3342 Report (as of 5/31/07)

Maui Electric Company, Limited

MATERIALS PHYSICAL INVENTORY
MAALAEA POWER PLANT

WH	STOCK CODE	Item	Description	SOH	Unit	Price/ Unit	Total Cost/ Item
MPP	000555649	WASHER	L.O. PURIFIER	21.00	EA	15.73	330.41
MPP	000555664	PIN	L.O. PURIFIER	24.00	EA	0.80	19.22
MPP	000555680	INSET	STRAINER	1.00	EA	0.00	0.00
MPP	000555706	ORING	L.O. PURIFIER	14.00	EA	25.87	362.23
MPP	000555722	ORING	L.O. PURIFIER	17.00	EA	6.35	108.02
MPP	000555748	PACKING	L.O. PURIFIER	12.00	EA	5.07	60.84
MPP	000555763	SEAL	LIP (HORIZ. SHAFT & PUMP)	6.00	EA	8.24	49.42
MPP	000555789	PACKING	OIL DRAIN	4.00	EA	1.38	5.54
MPP	000555805	ORING	L.O. PURIFIER	4.00	EA	1.44	5.74
MPP	000555821	PLUG	L.O. PURIFIER	0.00	EA	0.00	0.00
MPP	000555847	ORING	L.O. PURIFIER	10.00	EA	1.45	14.48
MPP	000555862	GLASS	L.O. PURIFIER	3.00	EA	9.16	27.49
MPP	000555888	COLLAR	DISCHARGE	1.00	EA	0.00	0.00
MPP	000555904	ORING	L.O. PURIFIER	22.00	EA	10.34	227.48
MPP	000555920	PACKING	L.O. PURIFIER	10.00	EA	11.51	115.13
MPP	000555946	DISC	GRAVITY	1.00	EA	0.00	0.00
MPP	000555961	DISC	GRAVITY	1.00	EA	0.00	0.00
MPP	000555987	DISC	GRAVITY	1.00	EA	0.00	0.00
MPP	000556001	DISC	GRAVITY	1.00	EA	0.00	0.00
MPP	000556027	DISC	GRAVITY	1.00	EA	0.00	0.00
MPP	000556043	DISC	GRAVITY	1.00	EA	0.00	0.00
MPP	000556068	DISC	GRAVITY	1.00	EA	0.00	0.00
MPP	000556084	ORING	L.O. PURIFIER	20.00	EA	1.80	36.00
MPP	000556100	ORING	L.O. PURIFIER	8.00	EA	36.47	291.76
MPP	000556126	ORING	L.O. PURIFIER	26.00	EA	3.42	89.00
MPP	000556142	ORING	L.O. PURIFIER	9.00	EA	0.74	6.66
MPP	000556167	PAD	FRICTION & SCREW	16.00	EA	30.62	489.88
MPP	000556183	GASKET	L.O. PURIFIER	8.00	EA	22.84	182.72
MPP	000556209	SPRING	L.O. PURIFIER	16.00	EA	14.14	226.20
MPP	000556225	DISC	TOP	1.00	EA	0.00	0.00
MPP	000556241	DISC	BOTTOM	12.00	EA	157.97	1,895.64
MPP	000556266	DISC	BOWL	0.00	EA	0.00	0.00
MPP	000556282	BEARING	L.O. PURIFIER	3.00	EA	5.06	15.17
MPP	000556308	BEARING	L.O. PURIFIER	8.00	EA	5.80	46.39
MPP	000556324	BEARING	L.O. PURIFIER	7.00	EA	29.49	206.46
MPP	000556340	GEAR	DRIVE 31MM	1.00	EA	342.72	342.72
MPP	000556365	GEAR	DRIVE 21MM	1.00	EA	342.72	342.72
MPP	000556381	PACKING	L.O. PURIFIER	17.00	EA	1.56	26.52
MPP	000556407	BUFFER	L.O. PURIFIER	7.00	EA	97.48	682.38
MPP	000556423	WASHER	L.O. PURIFIER	8.00	EA	53.60	428.82
MPP	000556449	ORING	L.O. PURIFIER	17.00	EA	0.77	13.01
MPP	000556464	ORING	L.O. PURIFIER	3.00	EA	26.79	80.37
MPP	000556480	GASKET	L.O. PURIFIER	4.00	EA	4.94	19.76
MPP	000556506	SPINDLE	BOWL	1.00	EA	1,021.80	1,021.80
MPP	000556522	GLASS	L.O. PURIFIER	12.00	EA	24.15	289.80
MPP	000556548	PACKING	L.O. PURIFIER	0.00	EA	9.25	0.00
MPP	000556563	ORING	L.O. PURIFIER	5.00	EA	0.69	3.43
MPP	000556589	ORING	F.O. PURIFIER	20.00	EA	2.80	55.95
MPP	000556605	GASKET	F.O. PURIFIER	4.00	EA	1.41	5.62
MPP	000556621	SERVICE KIT	MAJOR, F.O. PURIFIER	2.00	ST	459.60	919.19
MPP	000556647	ORING	F.O. PURIFIER	21.00	EA	8.74	183.45
MPP	000556662	ORING	SEAL, F.O. PURIFIER	13.00	EA	45.78	595.13
MPP	000556688	ORING	F.O. PURIFIER	14.00	EA	22.43	314.08
MPP	000556704	RING	SEAL, F.O. PURIFIER	7.00	EA	32.40	226.80
MPP	000556720	ORING	F.O. PURIFIER	24.00	EA	57.06	1,369.36
MPP	000556746	RING	SEAL, F.O. PURIFIER	1.00	EA	0.00	0.00
MPP	000556761	PACKING	F.O. PURIFIER	28.00	EA	1.68	47.11
MPP	000556787	PACKING	F.O. PURIFIER	9.00	EA	1.50	13.48
MPP	000556803	DISC	GRAVITY, 108.5MM	5.00	EA	204.01	1,020.04
MPP	000556829	BASKET	SLUDGE, F.O. PURIFIER	2.00	EA	998.07	1,996.15
MPP	000556845	ORING	F.O. PURIFIER	0.00	EA	2.80	0.00
MPP	000556860	ORING	F.O. PURIFIER	36.00	EA	3.17	114.11
MPP	000556886	ORING	F.O. PURIFIER	9.00	EA	10.66	95.94
MPP	000556902	ORING	F.O. PURIFIER	8.00	EA	5.67	45.36
MPP	000556928	ORING	F.O. PURIFIER	6.00	EA	5.31	31.86
MPP	000556944	ORING	F.O. PURIFIER	7.00	EA	4.02	28.14
MPP	000556969	ORING	F.O. PURIFIER	6.00	EA	3.78	22.68

NOTE: SOH - Stock on Hand

Source: DARS 3342 Report (as of 5/31/07)

Maui Electric Company, Limited

MATERIALS PHYSICAL INVENTORY
MAALAEA POWER PLANT

WH	STOCK CODE	Item	Description	SOH	Unit	Price/ Unit	Total Cost/ Item
MPP	000556985	ORING	F.O. PURIFIER	7.00	EA	5.99	41.93
MPP	000557009	ORING	F.O. PURIFIER	7.00	EA	23.30	163.10
MPP	000557025	RING	SEAL (FAN)	8.00	EA	9.36	74.88
MPP	000557041	RING	RECTANGULAR F.O. PURIFIER	2.00	EA	2.87	5.74
MPP	000557066	RING	RECTANGULAR F.O. PURIFIER	4.00	EA	0.00	0.00
MPP	000557082	RING	RECTANGULAR F.O. PURIFIER	6.00	EA	0.00	0.00
MPP	000557108	SPRING	F.O. PURIFIER	6.00	EA	0.00	0.00
MPP	000557124	SPRING	F.O. PURIFIER	6.00	EA	0.00	0.00
MPP	000557140	BLOCK	SET SCREW	1.00	EA	0.00	0.00
MPP	000557165	GLASS	OIL GAUGE	7.00	EA	9.20	64.37
MPP	000557181	PAD	FRICTION	10.00	EA	33.45	334.53
MPP	000557207	DISC	TOP	1.00	EA	2,764.81	2,764.81
MPP	000557210	RING, SEAL	FOR ALFA LAVAL FUEL OIL PURIFIERS,	13.00	EA	0.00	0.00
MPP	000557211	BOLT, HINGED, FRAME W/COLLECTING COVER	FOR CT FUEL OIL PURIFIER,	10.00	EA	68.48	684.84
MPP	000557213	PIN, CYLINDER WITH HOLE FRAME	WITH COLLECTING COVER	11.00	EA	6.01	66.08
MPP	000557215	NUT, CAP - FRAME	WITH COLLECTING COVER	9.00	EA	71.04	639.32
MPP	000557217	SHOE, CLAMPING - FRAME	WITH COLLECTING COVER	9.00	EA	71.72	645.47
MPP	000557219	PIN, SLOTTED, FRAME W/ COLLECTING COVER	FOR CT FUEL OIL PURIFIER,	11.00	EA	0.52	5.76
MPP	000557223	TRANSMITTER	THERMOCOUPLE	1.00	EA	0.00	0.00
MPP	000557249	TRIP ASSY	SHUNT, LO VOLT PWR CIRCUIT BRKR	2.00	EA	0.00	0.00
MPP	000557264	TRIP ASSY	SHUNT, LO VOLT PWR CIRCUIT BRKR	4.00	EA	0.00	0.00
MPP	000557280	MOTOR	60HP, 1760RPM, 230/460VAC, FR364T	0.00	EA	5,212.28	0.00
MPP	000557306	SOCKET	TRANSFORMER, LAMP W/LAMPS	5.00	EA	38.17	190.86
MPP	000557322	MOTOR	RELIANCE 1/2HP,1750 RPM,TEFC,90 FRAME	1.00	EA	505.60	505.60
MPP	000557348	BRUSH	RELIANCE, CHEMICAL FEED PUMP	15.00	EA	11.90	178.46
MPP	000557363	TRANSMITTER, POSITION	INCL. POSITION SWITCHES IN ADDITION TO	2.00	EA	1,399.81	2,799.61
MPP	000557389	POTENTIOMETER	ELECTRICAL	2.00	EA	161.61	323.22
MPP	000557405	PRESSURE	ADJ. DIFF.	3.00	EA	389.55	1,168.65
MPP	000557421	THERMOCOUPLE	10 FT, W/INTEGRAL CABLE	2.00	EA	2,022.61	4,045.22
MPP	000557447	THERMOCOUPLE	15 FT, W/INTEGRAL CABLE	5.00	EA	1,758.82	8,794.11
MPP	000557462	COMPUTER	FLOW (DUAL TOTALIZER / RATE INDICATOR)	1.00	EA	795.60	795.60
MPP	000557488	KIT	REPAIR	1.00	EA	256.61	256.61
MPP	000557504	VALVE	SOLENOID, 120VAC	1.00	EA	91.66	91.66
MPP	000557520	KIT	REPAIR	3.00	EA	60.08	180.24
MPP	000557546	MOTOR	BALDOR 20HP,324T,870RPM,3PH,480V,1.15	1.00	EA	2,788.81	2,788.81
MPP	000557561	TRANSMITTER	NON-INDICATING	1.00	EA	0.00	0.00
MPP	000557587	SENSOR	(R.O. SYSTEM)	1.00	EA	0.00	0.00
MPP	000557603	RELAY	VERI SYNC	1.00	EA	849.42	849.42
MPP	000557629	KIT	REPAIR	1.00	EA	0.00	0.00
MPP	000557645	POSITIONER	TRANSMITTER, NELES JAMESBURY	1.00	EA	1,580.02	1,580.02
MPP	000557660	SUPPLY	POWER	1.00	EA	0.00	0.00
MPP	000557686	MOTOR	BALDOR 3HP, 3450 RPM, 145T FR, 230/460	1.00	EA	232.54	232.54
MPP	000557702	MOTOR, W/BASE	10HP,3485RPM,230/460,3PH,TENV 215TC	1.00	EA	781.20	781.20
MPP	000557728	NUT	REFURBISHED	34.00	EA	5.82	197.88
MPP	000557744	MOTOR	BALDOR 1/2HP,1140RPM,115/208-230,FR56/H	1.00	EA	303.11	303.11
MPP	000557769	LAMP ASSY	TURBIDIMETER, HACH	5.00	EA	19.27	96.35
MPP	000557785	CELL ASSY	PHOTO, 1720C, TURBIDOMETER	3.00	EA	191.39	574.18
MPP	000557801	TRANSFORMER	CONTROL	1.00	EA	142.85	142.85
MPP	000557827	TRANSMITTER, POSITION	EXPLOSIONPROOF W/ 4-20MA POSITION FEED	0.00	EA	0.00	0.00
MPP	000557843	METER	HOUR	4.00	EA	37.00	148.00
MPP	000557868	SWITCH	VACUUM	2.00	EA	127.69	255.38
MPP	000557884	TRANSMITTER,POSITION - FISHER	NEMA 4 STANDARD CONSTRUCTION	1.00	EA	1,392.83	1,392.83
MPP	000557900	LAMP ASSY	DR/2000 & DR/2010 SPECTROPHOTOMETER	5.00	EA	48.41	242.05
MPP	000557926	LAMP	MINIATURE	10.00	EA	0.92	9.20
MPP	000557942	LENS	RED COLORED	1.00	EA	25.67	25.67
MPP	000557967	LENS	GREEN COLORED	1.00	EA	25.67	25.67
MPP	000557983	LENS	AMBER COLORED	2.00	EA	12.83	25.66
MPP	000558007	LENS	WHITE COLORED	3.00	EA	8.56	25.68
MPP	000558023	BLADES	FAN	4.00	EA	461.25	1,845.00
MPP	000558049	DISC	SEAL (FAN)	2.00	EA	206.50	413.00
MPP	000558064	COUPLING/SPIDER	G500X1-1/4HUB,G500X1-3/8HUB,G500SPIDER	6.00	EA	0.00	0.00
MPP	000558080	OIL SEAL	35MM 035X047X07 V (METRIC)	15.00	EA	17.35	260.28
MPP	000558106	BEARING	GEARBOX	8.00	EA	49.77	398.16
MPP	000558122	BEARING	TAPERED ROLLER, TIMKEN	4.00	EA	43.38	173.52

NOTE: SOH - Stock on Hand

Source: DARS 3342 Report (as of 5/31/07)

Maui Electric Company, Limited

MATERIALS PHYSICAL INVENTORY
MAALAEA POWER PLANT

WH	STOCK CODE	Item	Description	SOH	Unit	Price/ Unit	Total Cost/ Item
MPP	000558148	SEAL	OIL 060X075X08 (METRIC)	25.00	EA	17.11	427.84
MPP	000558163	HUB	GERBING	2.00	EA	38.94	77.88
MPP	000558189	SPIDER	GERBING	11.00	EA	7.49	82.42
MPP	000558205	GEAR	CTMI WORM / WORM 120CD	8.00	EA	1,112.21	8,897.68
MPP	000558221	BEARING	MOTOR (A-7848R-30)	10.00	EA	24.40	244.00
MPP	000558247	BEARING	MOTOR (A-7848R-40)	12.00	EA	48.88	586.56
MPP	000558262	MOTOR	U.S.1740 RPM 215TD FRAME, 10HP	1.00	EA	672.87	672.87
MPP	000558288	GASKET	HEAT EXCHANGER	1.00	EA	145.60	145.60
MPP	000558304	SHEAVE	BROWNING	2.00	EA	175.54	351.08
MPP	000558320	BELT	CONDENSER VACUUM PUMP	6.00	EA	15.99	95.93
MPP	000558321	SLEEVE, 4JE	FOR M15 TURBINE DRAIN PUMP, MODEL D-1011	0.00	EA	0.00	0.00
MPP	000558323	O-RING, BUNA 70	FOR M15 CONDENSATE PUMP IMPELLER SEALS	25.00	EA	0.00	0.00
MPP	000558346	SHAFT	CAV120	1.00	EA	0.00	0.00
MPP	000558361	GEAR UNIT	CAVEX WORM	0.00	EA	2,717.21	0.00
MPP	000558387	SEAL RING	"J" SEAT	1.00	EA	3,287.78	3,287.78
MPP	000558403	PACKING	ISOLATION VALVE 72"	2.00	EA	557.51	1,115.02
MPP	000558429	GASKET	ISOLATION VALVE 72"	2.00	EA	20.80	41.60
MPP	000558445	SHAFT ASSY	WORM	2.00	EA	375.22	750.44
MPP	000558460	GEAR	WORM	2.00	EA	108.68	217.36
MPP	000558486	SWITCH	LIMIT	2.00	EA	595.60	1,191.20
MPP	000558502	SWITCH	TORQUE	3.00	EA	253.91	761.73
MPP	000558528	SEAL KIT	ISOLATION VALVE 72"	2.00	EA	100.36	200.72
MPP	000558544	JOINT	SOFT IRON RING	1.00	EA	48.36	48.36
MPP	000558569	PACKING	GRAPHOIL	7.00	EA	56.16	393.12
MPP	000558585	PINION	MOTOR	1.00	EA	29.12	29.12
MPP	000558601	SHAFT	WORM GEAR	1.00	EA	29.12	29.12
MPP	000558627	NUT	STEM	1.00	EA	61.88	61.88
MPP	000558643	BEARING, AIR VACUUM PUMP (SIHI)	120MM O.D.	4.00	EA	91.87	367.48
MPP	000558645	SET, PACKING (SIHI)	FOR M15 AIR VACUUM PUMP, MODEL LPH 75340	2.00	EA	0.00	0.00
MPP	000558648	KIT, SEAL, AIR VACUUM, SIHI PUMP	FOR M15 AIR VACUUM PUMP MODEL #LPH 75340	3.00	EA	0.00	0.00
MPP	000558650	WASHER, LOCK, DWG. #3190016207 (SIHI)	FOR M15 AIR VACUUM PUMP, MODEL LPH75340,	2.00	EA	0.00	0.00
MPP	000558652	NUT, BEARING, (SIHI)	FOR M15 AIR VACUUM PUMP, MODEL LPH 75340	2.00	EA	0.00	0.00
MPP	000558654	SPACER (SIHI)	FOR M15 AIR VACUUM PUMP MODEL LPH 75340	2.00	EA	0.00	0.00
MPP	000558656	NUT, BEARING, WITHDRAWAL (SIHI)	FOR M15 AIR VACUUM PUMP, MODEL LPH 75340	2.00	EA	0.00	0.00
MPP	000558658	RING, SPLASH (SIHI)	FOR M15 AIR VACUUM PUMP, MODEL LPH 75340	4.00	EA	0.00	0.00
MPP	000558668	SLEEVE	BEARING, SIHI	4.00	EA	61.25	244.98
MPP	000558684	PACKING RING (SIHI)	1/2" X 14-1/2" X 1	2.00	ST	259.57	519.13
MPP	000558688	BEARING, SPHERICAL ROLLER, TAPERED	SIHI AIR VACUUM PUMP	4.00	EA	0.00	0.00
MPP	000558690	SEAL, MECHANICAL, VITON	5/8 - T6A 211 (18-8)	1.00	EA	53.12	53.12
MPP	000558700	DISC	RUPTURE	2.00	EA	1,512.35	3,024.70
MPP	000558726	VALVE ASSY	PRESS. REDUCING, PACKING	3.00	EA	175.45	526.35
MPP	000558742	VALVE ASSY	PRESS. REDUCING, RING, PISTON	4.00	EA	830.49	3,321.96
MPP	000558767	VALVE ASSY	PRESS. REDUCING, GASKET, BONNET	2.00	EA	71.45	142.90
MPP	000558783	VALVE ASSY	PRESS. REDUCING, SEAT	2.00	EA	4,277.89	8,555.78
MPP	000558809	VALVE ASSY	PRESS. REDUCING, STEM & PLUG	1.00	EA	10,001.65	10,001.65
MPP	000558825	PACKING	STEAM VALVE	0.00	EA	127.50	0.00
MPP	000558841	DIAPHRAGM	CONTROL VALVES (MASONEILAN)	0.00	EA	26.00	0.00
MPP	000558866	RING	PACKING (SIHI)	12.00	EA	20.40	244.80
MPP	000558882	RING	PACKING (SIHI)	2.00	EA	40.80	81.60
MPP	000558908	PACKING	GRAPHITE	3.00	EA	20.75	62.25
MPP	000558924	PACKING	GRAPHITE	12.00	EA	41.60	499.20
MPP	000558940	PACKING	CONTROL VALVES (MASONEILAN)	2.00	EA	5.20	10.40
MPP	000558965	PACKING	SPLIT	12.00	EA	6.24	74.88
MPP	000558981	PACKING	CONTROL VALVES (MASONEILAN)	32.00	EA	6.24	199.68
MPP	000559005	PACKING	CONTROL VALVES (MASONEILAN)	60.00	EA	7.28	436.80
MPP	000559021	GASKET	SPIRAL WOUND	1.00	EA	48.88	48.88
MPP	000559047	GASKET	SPIRAL WOUND	1.00	EA	52.00	52.00
MPP	000559062	GASKET	SPIRAL WOUND	12.00	EA	30.16	361.92

NOTE: SOH - Stock on Hand

Source: DARS 3342 Report (as of 5/31/07)

Maui Electric Company, Limited

MATERIALS PHYSICAL INVENTORY
MAALAEA POWER PLANT

WH	STOCK CODE	Item	Description	SOH	Unit	Price/ Unit	Total Cost/ Item
MPP	000559088	GASKET	SPIRAL WOUND	11.00	EA	20.80	228.80
MPP	000559104	GASKET	SPIRAL WOUND	1.00	EA	24.96	24.96
MPP	000559120	GASKET	SPIRAL WOUND	1.00	EA	23.92	23.92
MPP	000559146	GASKET	SPIRAL WOUND	1.00	EA	33.28	33.28
MPP	000559161	GASKET	SPIRAL WOUND	1.00	EA	42.64	42.64
MPP	000559187	GASKET	SPIRAL WOUND	2.00	EA	40.56	81.12
MPP	000559203	GASKET	SPIRAL WOUND	2.00	EA	28.08	56.16
MPP	000559229	GASKET	SPIRAL WOUND	2.00	EA	26.00	52.00
MPP	000559245	GASKET	SPIRAL WOUND	2.00	EA	35.36	70.72
MPP	000559260	DIAPHRAGM	CONTROL VALVE 87/88 #6	10.00	EA	109.20	1,092.00
MPP	000559286	DIAPHRAGM	CONTROL VALVE 87/88 #10	3.00	EA	126.88	380.64
MPP	000559302	DIAPHRAGM	CONTROL VALVE 87/88 #16	4.00	EA	231.38	925.52
MPP	000559328	GROMMET	CONTROL VALVE	1.00	EA	7.28	7.28
MPP	000559344	DIAPHRAGM	CONTROL VALVE	0.00	EA	99.84	0.00
MPP	000559369	DIAPHRAGM	CONTROL VALVE	6.00	EA	5.20	31.20
MPP	000559385	GASKET	CONTROL VALVE	6.00	EA	4.16	24.96
MPP	000559401	GASKET	CONTROL VALVE	7.00	EA	16.05	112.35
MPP	000559427	TUBE	METERING S/A	2.00	EA	76.96	153.92
MPP	000559443	TUBE	METERING S/A	1.00	EA	71.76	71.76
MPP	000559468	BUSHING	VALVE	6.00	EA	6.24	37.44
MPP	000559484	BUSHING	VALVE	6.00	EA	5.20	31.20
MPP	000559500	FLAPPER	RUBBER	7.00	EA	26.00	182.00
MPP	000559526	COIL	CONTROL VALVE	5.00	EA	90.76	453.80
MPP	000559542	BOARD	THERMINAL	3.00	EA	43.68	131.04
MPP	000559567	REGULATOR, PRESSURE	80-4; SIZE: 1/4" npt, MAX 250PSI;	4.00	EA	61.36	245.44
MPP	000559583	REGULATOR	PRESSURE 78-40	4.00	EA	70.83	283.31
MPP	000559609	WASHER	SEAL (DYNA)	1.00	EA	2.08	2.08
MPP	000559625	WASHER	SEAL M12	79.00	EA	2.08	164.32
MPP	000559641	WASHER	SEAL	26.00	EA	4.16	108.16
MPP	000559666	RING	BACKUP	5.00	EA	76.96	384.80
MPP	000559682	ORING	VALVE	18.00	EA	2.08	37.44
MPP	000559708	ORING	VALVE	1.00	EA	2.08	2.08
MPP	000559724	ORING	VALVE	18.00	EA	4.16	74.88
MPP	000559740	ORING	M22.2 X 3	13.00	EA	2.08	27.04
MPP	000559765	ORING	M32.2 X 3	13.00	EA	3.12	40.56
MPP	000559781	ORING	VALVE	4.00	EA	3.12	12.48
MPP	000559807	ORING	VALVE	4.00	EA	5.20	20.80
MPP	000559823	RING	SEAL (INNER)	1.00	EA	30.16	30.16
MPP	000559849	RING	SEAL (OUTER)	1.00	EA	61.36	61.36
MPP	000559864	RING	SEAL (INNER)	1.00	EA	151.72	151.72
MPP	000559880	RING	PISTON	1.00	EA	246.48	246.48
MPP	000559906	WIPER	ROD	13.00	EA	7.28	94.64
MPP	000559922	WIPER	STEM	4.00	EA	10.40	41.60
MPP	000559948	POSITIONER	MODEL 8012	1.00	EA	1,297.83	1,297.83
MPP	000559963	RELAY	CONTROL VALVES (MASONEILAN)	2.00	EA	293.73	587.46
MPP	000559989	KIT	SEALS & VALVE	1.00	EA	245.44	245.44
MPP	000559991	PLUG, 21K, 1.5, 600	FOR MASONEILAN DRESSER CONTROL VALVE	2.00	EA	0.00	0.00
MPP	000559993	RING, SEAT, 21K 1.5 600 .250 dia.	FOR MASONEILAN DRESSER CONTROL VALVE	2.00	EA	0.00	0.00
MPP	000559995	CAGE, 21K 1.5-2	FOR MASONNEILAN DRESSER CONTROL VALVE	3.00	EA	147.91	443.73
MPP	000559996	GASKET, KIT, 21K	FOR MASONEILAN CONTROL VALVE	2.00	EA	0.00	0.00
MPP	000559997	KIT, PACKING	FOR MASONEILAN DRESSER CONTROL VALVE	2.00	EA	0.00	0.00
MPP	000559999	GASKET, PILOT	FOR MASONEILAN DRESSER CONTROL VALVE	9.00	EA	0.00	0.00
MPP	000560001	ASSEMBLY, S/A PILOT	FOR MASONEILAN DRESSER CONTROL VALVE	4.00	EA	0.00	0.00
MPP	000560003	BOARD	PRINTED WIRING	3.00	EA	423.73	1,271.18
MPP	000560029	GASKET	SPIRAL WOUND 2-3/32"X1-13/32"X1/8"THK	9.00	EA	14.48	130.32
MPP	000560045	GASKET	SPIRAL WOUND 1.5" 900/1500#	59.00	EA	6.47	381.55
MPP	000560048	GASKET, S STEEL TRAP FLANGE, 316SS	WITH FLEXIBLE GRAPHITE, SELF LOCATOR	5.00	EA	4.58	22.88
MPP	000560060	GASKET	SPIRAL WOUND 150# 3"	47.00	EA	4.92	231.03
MPP	000560086	GASKET	SPIRAL WOUND 150# 10"	5.00	EA	0.00	0.00
MPP	000560102	GASKET	SPIRAL WOUND 150# 8"	3.00	EA	0.00	0.00
MPP	000560108	GASKET, SPIRAL WOUND, SIZE: 6" 600#,	TYPE 304, GRAFOIL, W/ INNER RING	14.00	EA	13.06	182.80

NOTE: SOH - Stock on Hand

Source: DARS 3342 Report (as of 5/31/07)

Maui Electric Company, Limited

MATERIALS PHYSICAL INVENTORY
MAALAEA POWER PLANT

WH	STOCK CODE	Item	Description	SOH	Unit	Price/ Unit	Total Cost/ Item
MPP	000560110	GASKET, SPIRAL WOUND, FLEXITALIC	304 GRAFOIL	7.00	EA	3.20	22.42
MPP	000560128	GASKET	SPIRAL WOUND 150# 2-1/2"	20.00	EA	4.17	83.32
MPP	000560131	GASKET, S STEEL TRAP FLANGE, 316SS WITH	FLEXIBLE GRAPHITE, SELF LOCATOR DESIGN	6.00	EA	8.59	51.56
MPP	000560141	GASKET, S STEEL TRAP FLANGE, 316SS	WITH FLEXIBLE GRAPHITE, SELF LOCATOR	5.00	EA	4.63	23.17
MPP	000560144	GASKET	SPIRAL WOUND 150# 1-1/2"	22.00	EA	3.67	80.83
MPP	000560169	GASKET	SPIRAL WOUND 150# 1"	22.00	EA	2.80	61.66
MPP	000560185	GASKET	SPIRAL WOUND 150# 1/2"	22.00	EA	2.97	65.31
MPP	000560188	GASKET, S STEEL TRAP FLANGE, 316SS	WITH FLEXIBLE GRAPHITE, SELF LOCATOR	0.00	EA	4.98	0.00
MPP	000560201	GASKET	SPIRAL WOUND 300/400/600# 1"	13.00	EA	3.20	41.62
MPP	000560204	GASKET, S STEEL TRAP FLANGE, 316SS	WITH FLEXIBLE GRAPHITE, SELF LOCATOR	4.00	EA	0.00	0.00
MPP	000560227	GASKET	SPIRAL WOUND 300/400/600# 2"	21.00	EA	3.86	80.96
MPP	000560230	GASKET, S STEEL TRAP FLANGE, 316SS WITH	FLEXIBLE GRAPHITE, SELF LOCATOR DESIGN	4.00	EA	9.44	37.75
MPP	000560243	SWITCH ASSY	MERCOID, PRESSURE	1.00	EA	376.25	376.25
MPP	000560268	GASKET	OVAL DRUM	16.00	EA	0.00	0.00
MPP	000560284	GASKET	FLEXITALLIC OVAL 12"X16"X.175X3/4"	18.00	EA	53.54	963.80
MPP	000560300	KIT	REPLACEMENT RELAY - POSITIONER	0.00	EA	0.00	0.00
MPP	000560326	KIT	POSITIONER REPAIR	2.00	EA	0.00	0.00
MPP	000560342	VALVE	LIQUID RELIEF, BRASS, 1/2" NPT	1.00	EA	0.00	0.00
MPP	000560367	INDICATOR	FLOW	4.00	EA	135.88	543.52
MPP	000560383	GASKET	SPIRAL WOUND 300/400/600#, 3"	21.00	EA	5.50	115.49
MPP	000560386	GASKET, S STEEL TRAP FLANGE, 316SS WITH	FLEXIBLE GRAPHITE, SLEF LOCATOR DESIGN	3.00	EA	0.00	0.00
MPP	000560409	GASKET	SPIRAL WOUND 300/400/600#, 1-1/2"	14.00	EA	3.89	54.49
MPP	000560425	GASKET	SPIRAL WOUND 150#, 2"	22.00	EA	4.27	93.90
MPP	000560441	MODULE	SIMPLIPORT, RELIANCE WATER COLUMN	9.00	EA	181.14	1,630.26
MPP	000560466	TRANSMITTER, POSITION	EXPLOSIONPROOF W/ 4-20MA	1.00	EA	1,180.29	1,180.29
MPP	000560482	BEARING	BOILER FEED PUMP	4.00	EA	197.79	791.17
MPP	000560508	BEARING	ROLLER, BOILER FEED PUMP	3.00	EA	155.01	465.04
MPP	000560524	GASKET	BOILER FEED PUMP	0.00	EA	5.98	0.00
MPP	000560540	SEAL	MECHANICAL, BOILER FEED PUMP	0.00	EA	6,170.84	0.00
MPP	000560565	PROBE	AQUARIAN 3000C	5.00	EA	729.12	3,645.60
MPP	000560581	VALVE	SAFETY SET 775 PSI, 1-1/2"	2.00	EA	4,805.23	9,610.46
MPP	000560607	VALVE	SAFETY SET 780 PSI, 1-1/2"	1.00	EA	4,805.23	4,805.23
MPP	000560623	VALVE	SAFETY SET 680 PSI, 1-1/2"	1.00	EA	5,831.29	5,831.29
MPP	000560649	VALVE	SAFETY SET 60 PSI, 2-1/2"	2.00	EA	1,351.06	2,702.12
MPP	000560664	VALVE	SAFETY SET 65 PSI, 2-1/2"	1.00	EA	1,351.06	1,351.06
MPP	000560680	GASKET	SPIRAL WOUND, 300/400/600#, 1/2"	16.00	EA	5.05	80.83
MPP	000560683	GASKET, S STEEL TRAP FLANGE, 316SS	WITH GLEXIBLE GRAPHITE, SELF LOCATOR	4.00	EA	0.00	0.00
MPP	000560706	SWITCH	LIMIT, L/S DIVERTER DOOR ZAM-26	1.00	EA	0.00	0.00
MPP	000560722	GASKET	SPIRAL WOUND, 150#, 4"	23.00	EA	6.47	148.77
MPP	000560725	GASKET, S STEEL TRAP FLANGE, 316SS WITH	FLEXIBLE GRAPHITE, SELF LOCATOR DESIGN	2.00	EA	0.00	0.00
MPP	000560748	GASKET	SPIRAL WOUND, 150#, 6"	6.00	EA	9.39	56.34
MPP	000560751	GASKET, S STEEL TRAP FLANGE, 316SS WITH	FLEXIBLE GRAPHITE, SELF LOCATOR DESIGN	1.00	EA	0.00	0.00
MPP	000560763	VALVE	CHECK, 2-1/2", 200 WOG/125 SWP	2.00	EA	119.19	238.38
MPP	000560789	VALVE	RELIEF, 2", 60 PSI, 3OOF	1.00	EA	0.00	0.00
MPP	000560805	VALVE	GLOBE, 1" X 800#	9.00	EA	70.68	636.12
MPP	000560821	VALVE	HEX, MANIFOLD	2.00	EA	312.99	625.98
MPP	000560847	ASSY	POTENTIOMETER	1.00	EA	170.06	170.06
MPP	000560862	DIODE	ELECTRICAL	0.00	EA	56.72	0.00
MPP	000560888	FILTER	FLEETGUARD AIR (2 PER)	12.00	EA	163.72	1,964.62
MPP	000560904	FILTER	FUEL, (2 PER)	22.00	EA	17.60	387.15
MPP	000560920	FILTER	LUBE OIL, (5 PER)	46.00	EA	19.28	886.90
MPP	000560921	FILTER, SECONDARY AIR	CUMMINS, KTA50, FLEETGUARD	0.00	EA	89.79	0.00
MPP	000560922	FILTER, PRIMARY AIR	CUMMINS, KTA50, FLEETGUARD	0.00	EA	54.97	0.00
MPP	000560946	FILTER	L.O. BY-PASS, (2 PER)	31.00	EA	16.41	508.66
MPP	000560961	FILTER	COOLING WATER, (4 PER)	12.00	EA	16.90	202.84
MPP	000560987	FILTER	AIR, (2 PER)	16.00	EA	47.07	753.15
MPP	000561001	POWER PACK	FORK REBUILT	0.00	EA	2,935.86	0.00
MPP	000561027	POWER PACK	BLADE	0.00	EA	2,649.86	0.00
MPP	000561043	BEARING	UPPER	0.00	EA	218.93	0.00
MPP	000561084	KIT	MAIN BEARING	0.00	EA	988.38	0.00
MPP	000561100	FILTER	OIL	0.00	EA	3.78	0.00
MPP	000561126	CARTRIDGE	L.O. FILTER	0.00	EA	26.71	0.00

NOTE: SOH - Stock on Hand

Source: DARS 3342 Report (as of 5/31/07)

Maui Electric Company, Limited

MATERIALS PHYSICAL INVENTORY
MAALAEA POWER PLANT

WH	STOCK CODE	Item	Description	SOH	Unit	Price/ Unit	Total Cost/ Item
MPP	000561142	GASKET	COVER ASSY	0.00	EA	0.69	0.00
MPP	000561167	GASKET	SEAL (L.O.)	0.00	EA	2.05	0.00
MPP	000561183	ELEMENT	LINER PAPER	0.00	EA	3.00	0.00
MPP	000561209	FILTER	F.O. PRIMARY	0.00	EA	4.43	0.00
MPP	000561225	SEAL	COVER TO HOUSING	0.00	EA	0.26	0.00
MPP	000561241	GASKET	HANDHOLE, COVER	0.00	EA	0.98	0.00
MPP	000561266	GASKET	HAND WHEEL, NYLON	0.00	EA	0.31	0.00
MPP	000561282	GASKET	HAND WHEEL	0.00	EA	0.29	0.00
MPP	000561308	GASKET	HANDHOLE COVER	0.00	EA	0.16	0.00
MPP	000561324	GASKET	HANDHOLE COVER, BUNA N	0.00	EA	3.54	0.00
MPP	000561340	SEGMENT	CAMSHAFT LONG	0.00	EA	1,573.04	0.00
MPP	000561365	SEAL	RUBBER	15.00	EA	1.28	19.19
MPP	000561381	HOSE	RUBBER	0.00	EA	0.99	0.00
MPP	000561407	PUMP COMPLETE	WATER	0.00	EA	1,862.26	0.00
MPP	000561423	INJECTOR	FUEL	0.00	EA	137.16	0.00
MPP	000561449	ASSY	LATCH	0.00	EA	2.24	0.00
MPP	000561464	GASKET	SEAL COVER	0.00	EA	25.44	0.00
MPP	000561480	TUBE	OIL LINE	0.00	EA	157.30	0.00
MPP	000561506	COVER	STRAINER	0.00	EA	67.53	0.00
MPP	000561522	NUT	RADIATOR COOLING FAN	0.00	EA	0.12	0.00
MPP	000561548	WASHER	RADIATOR COOLING FAN	0.00	EA	0.02	0.00
MPP	000561563	BOLT	RADIATOR COOLING FAN	0.00	EA	0.57	0.00
MPP	000561589	BOLT	RADIATOR COOLING FAN	0.00	EA	0.19	0.00
MPP	000561605	HEADER	RADIATOR COOLING FAN	0.00	EA	1,805.21	0.00
MPP	000561621	PLATE	RADIATOR COOLING FAN	0.00	EA	45.22	0.00
MPP	000561647	PLATE	RADIATOR COOLING FAN	0.00	EA	9.59	0.00
MPP	000561662	HEADER	RADIATOR COOLING FAN	0.00	EA	0.00	0.00
MPP	000561688	SCREEN	RADIATOR COOLING FAN	0.00	EA	46.44	0.00
MPP	000561704	GASKET	RADIATOR COOLING FAN	0.00	EA	22.92	0.00
MPP	000561720	HEADER	RADIATOR COOLING FAN	0.00	EA	330.45	0.00
MPP	000561746	HEADER	RADIATOR COOLING FAN	0.00	EA	399.76	0.00
MPP	000561761	HEADER	RADIATOR COOLING FAN	0.00	EA	364.60	0.00
MPP	000561787	DISC	RADIATOR COOLING FAN	0.00	EA	623.42	0.00
MPP	000561803	RING	RADIATOR COOLING FAN	3.00	EA	63.29	189.87
MPP	000561829	BOLT	RADIATOR COOLING FAN	0.00	EA	0.45	0.00
MPP	000561845	BEARING	RADIATOR COOLING FAN	0.00	EA	94.11	0.00
MPP	000561860	BEARING	RADIATOR COOLING FAN	0.00	EA	247.96	0.00
MPP	000561886	BEARING	RADIATOR COOLING FAN	0.00	EA	172.47	0.00
MPP	000561902	KEY	WOODRUFF	3.00	EA	0.00	0.00
MPP	000561928	COUPLING	RADIATOR COOLING FAN	0.00	EA	964.73	0.00
MPP	000561944	BRUSH	FLAT	0.00	EA	7.05	0.00
MPP	000561969	BRUSH	EXCITER	0.00	EA	6.43	0.00
MPP	000561985	SWITCH	ISOLATION (ENG. CONTROL CABINET)	6.00	EA	79.91	479.43
MPP	000562009	BATTERY	EXIDE (DRY)	1.00	EA	752.04	752.04
MPP	000562025	RACK	BATTERY	0.00	EA	497.84	0.00
MPP	000562041	CHARGER	BATTERY	0.00	EA	2,053.67	0.00
MPP	000562066	SUPPRESSOR	SURGE	0.00	EA	86.58	0.00
MPP	000562082	DIODE	STANDARD	0.00	EA	28.08	0.00
MPP	000562108	DIODE	REVERSE	0.00	EA	28.08	0.00
MPP	000562124	SHEAVE	GATE	0.00	EA	76.73	0.00
MPP	000562140	BUSHING	GATE	0.00	EA	18.97	0.00
MPP	000562165	BEARING	PILLOW BLOCK	6.00	EA	79.49	476.94
MPP	000562181	GASKET	AIR	23.00	EA	1.35	31.05
MPP	000562207	SPRING	AIR	19.00	EA	2.55	48.45
MPP	000562223	VALVE	AIR	16.00	EA	7.59	121.44
MPP	000562249	GASKET	AIR	20.00	EA	0.99	19.80
MPP	000562264	SEAT	AIR	7.00	EA	34.09	238.63
MPP	000562280	SEAT	AIR	3.00	EA	0.00	0.00
MPP	000562306	STUD	AIR	7.00	EA	0.99	6.93
MPP	000562322	BUMPER	AIR	4.00	EA	1.35	5.40
MPP	000562348	GASKET	AIR	7.00	EA	2.40	16.80
MPP	000562363	PLATFORM	AIR	4.00	EA	0.94	3.76
MPP	000562389	PIN	AIR	24.00	EA	1.20	28.80
MPP	000562405	SPRING	AIR	24.00	EA	0.88	21.12
MPP	000562421	PISTON	AIR	2.00	EA	5.62	11.24
MPP	000562447	ORING	AIR	2.00	EA	1.20	2.40
MPP	000562462	GASKET SET	AIR	6.00	EA	20.31	121.86

NOTE: SOH - Stock on Hand

Source: DARS 3342 Report (as of 5/31/07)

Maui Electric Company, Limited

MATERIALS PHYSICAL INVENTORY
MAALAEA POWER PLANT

WH	STOCK CODE	Item	Description	SOH	Unit	Price/ Unit	Total Cost/ Item
MPP	000562488	INSERT	AIR	4.00	EA	6.77	27.08
MPP	000562504	AIR FILTER ELEMENT	QUINCY AIR COMPRESSOR, MODEL QR3408B7	5.00	EA	20.80	104.00
MPP	000562520	AIR FILTER ELEMENT	QUINCY AIR COMPRESSOR	17.00	EA	16.71	284.14
MPP	000562546	FILTER, LUBE OIL	QUINCY AIR COMPRESSOR MODEL QR3408B7	12.00	PK	18.61	223.32
MPP	000562561	OIL QUIN-CIP RECIPROCATING	QUINCY AIR COMPRESSOR, MODEL QR3408B7	1.00	EA	14.05	14.05
MPP	000562587	BEARING	MAIN	8.00	EA	0.00	0.00
MPP	000562603	SEAL	ORING	15.00	EA	0.00	0.00
MPP	000562629	GASKET	COVER	5.00	EA	0.00	0.00
MPP	000562645	GASKET	COVER	8.00	EA	0.00	0.00
MPP	000562660	SEAL	ORING	4.00	EA	1.03	4.10
MPP	000562686	SEAL	ORING	1.00	EA	0.00	0.00
MPP	000562702	SEAL	ORING	14.00	EA	8.89	124.52
MPP	000562728	SEAL	ORING	4.00	EA	0.00	0.00
MPP	000562744	SCREW	CAP	28.00	EA	0.00	0.00
MPP	000562769	WASHER	VLV	40.00	EA	0.00	0.00
MPP	000562785	SEAL	ORING	8.00	EA	0.00	0.00
MPP	000562801	GASKET	CYL HD	0.00	EA	0.00	0.00
MPP	000562827	SEAL	ORING	4.00	EA	0.00	0.00
MPP	000562843	RING	PISTON	8.00	EA	0.00	0.00
MPP	000562868	RING	PISTON	8.00	EA	0.00	0.00
MPP	000562884	RING	PISTON	8.00	EA	0.00	0.00
MPP	000562900	RING	PISTON	8.00	EA	0.00	0.00
MPP	000562926	BEARING	CONN ROD	8.00	EA	0.00	0.00
MPP	000562942	SEAL	ORING	6.00	EA	0.00	0.00
MPP	000562967	ARM ASSY	ROCKER	7.00	EA	315.32	2,207.23
MPP	000562983	INSERT	ROCKER	6.00	EA	0.00	0.00
MPP	000563007	BUTTON	ROCKER	2.00	EA	0.00	0.00
MPP	000563023	SCREW	ADJ	4.00	EA	0.00	0.00
MPP	000563049	VALVE	ACCESS	2.00	EA	0.00	0.00
MPP	000563064	PUSH ROD	VALVE & INJ	3.00	EA	60.95	182.84
MPP	000563080	BRIDGE ASSY	VLV	4.00	EA	45.89	183.57
MPP	000563106	FILTER	LUBE OIL	48.00	EA	27.78	1,333.22
MPP	000563122	SEAL	ORING	23.00	EA	21.24	488.52
MPP	000563163	HOSE	BREATHER	0.00	EA	0.00	0.00
MPP	000563189	HOSE ASSY	13.2 INCHES	0.00	EA	0.00	0.00
MPP	000563205	SEAL	ORING	0.00	EA	18.91	0.00
MPP	000563221	CLAMP	COVER	0.00	EA	0.00	0.00
MPP	000563247	SEAL	ORING	0.00	EA	15.75	0.00
MPP	000563262	SEAL	ORING	0.00	EA	0.00	0.00
MPP	000563288	SEAL	ORING	0.00	EA	0.00	0.00
MPP	000563304	SEAL	ORING	0.00	EA	4.80	0.00
MPP	000563320	SEAL	ORING	0.00	EA	10.00	0.00
MPP	000563346	GASKET	OIL COOLER	0.00	EA	0.00	0.00
MPP	000563361	REGULATOR	TEMPERATURE	0.00	EA	0.00	0.00
MPP	000563387	SEAL	LIP	0.00	EA	0.00	0.00
MPP	000563403	SEAL	GP-FACE	0.00	EA	0.00	0.00
MPP	000563429	SEAL	LIP	0.00	EA	0.00	0.00
MPP	000563445	SEAL	ORING	0.00	EA	0.00	0.00
MPP	000563460	SEAL	ORING	0.00	EA	8.68	0.00
MPP	000563486	FILTER	AMER KLEEN 2500	0.00	EA	39.02	0.00
MPP	000563502	GASKET	EXH	0.00	EA	0.00	0.00
MPP	000563528	GASKET	EXH	0.00	EA	0.00	0.00
MPP	000563544	CARTRIDGE	FILTER	0.00	EA	9.53	0.00
MPP	000563569	CARTRIDGE	FILTER	0.00	EA	14.71	0.00
MPP	000563585	FILTER	FUEL	0.00	EA	30.31	0.00
MPP	000563601	SEAL	ORING	0.00	EA	14.30	0.00
MPP	000563627	SEAL	ORING	0.00	EA	12.94	0.00
MPP	000563630	MOTOR	AIR STARTING	0.00	EA	3,533.66	0.00
MPP	000563643	SWITCH ASSY	PRELUBE PRESS.	0.00	EA	0.00	0.00
MPP	000563668	GASKET KIT	MOTOR	0.00	EA	13.21	0.00
MPP	000563680	PUMP, PRELUBE	LUBRICATION SYSTEM	0.00	EA	1,469.11	0.00
MPP	000563684	CONNECTOR	ELECTRONIC	0.00	EA	0.00	0.00
MPP	000563700	PICKUP ASSY	MAGNETIC	0.00	EA	0.00	0.00
MPP	000563726	THERMOCOUPLE	61-0407	0.00	EA	0.00	0.00

NOTE: SOH - Stock on Hand

Source: DARS 3342 Report (as of 5/31/07)

Maui Electric Company, Limited

MATERIALS PHYSICAL INVENTORY
MAALAEA POWER PLANT

WH	STOCK CODE	Item	Description	SOH	Unit	Price/ Unit	Total Cost/ Item
MPP	000563742	LEAD ASSY	THERMOCOUPLE	0.00	EA	0.00	0.00
MPP	000563767	COMPOUND	THRML	0.00	EA	0.00	0.00
MPP	000563783	DETECTOR	GP - LIQUID	0.00	EA	533.02	0.00
MPP	000563809	REGULATOR	VOLTAGE	0.00	EA	0.00	0.00
MPP	000563825	POTENTIOMETER	SURGE, 420VAC, 40J SURGE SUPPRESSOR	0.00	EA	33.28	0.00
MPP	000563841	RECTIFIER	BRIDGE ASSY	0.00	EA	18.30	0.00
MPP	000563866	DIODE	RVS, 125 AMP, 1200V	0.00	EA	52.00	0.00
MPP	000563882	DIODE	STD, 125 AMP, 1200V	0.00	EA	52.00	0.00
MPP	000563908	CAPACITOR	15M, 10%, 330 VAC MP	0.00	EA	12.48	0.00
MPP	000563924	FILTER	ULTIPOR 111	0.00	EA	201.24	0.00
MPP	000563940	FILTER	ULTIPOR (6 per)	0.00	EA	357.97	0.00
MPP	000563965	ELEMENT ASSY.	FILTER	0.00	EA	176.19	0.00
MPP	000563981	SCREEN	AIR FILTER	0.00	EA	214.84	0.00
MPP	000564005	SCREEN	AIR FILTER	0.00	EA	237.50	0.00
MPP	000564021	O-RING, SEAL, COVER	MOLOKAI	0.00	EA	0.00	0.00
MPP	000564047	HOSE, TEE, BREATHER		0.00	EA	0.00	0.00
MPP	000564062	O-RING, SEAL AFTER COOLER	MOLOKAI	0.00	EA	0.00	0.00
MPP	000564088	GASKET	OIL COOLER	0.00	EA	0.00	0.00
MPP	000564104	GASKET	EXHAUST MANIFOLD	0.00	EA	0.00	0.00
MPP	000564120	GASKET	EXHAUST MANIFOLD	0.00	EA	0.00	0.00
MPP	000564146	GASKET KIT	MOTOR	0.00	EA	0.00	0.00
MPP	000564161	ORING	SEAL	0.00	EA	0.00	0.00
MPP	000564187	4564203	125 AMP, 1200V	0.00	EA	0.00	0.00
MPP	000564203	ORING	SEAL	0.00	EA	0.00	0.00
MPP	000564229	DIODE	125 AMP, 1200V	0.00	EA	0.00	0.00
MPP	000564245	RECTIFIER	BRIDGE ASSY	0.00	EA	0.00	0.00
MPP	000564260	CAP	CAPACITOR	0.00	EA	0.00	0.00
MPP	000564286	KIT- REPAIR MOTOR	1W4776 - PUMP GP - AIR PRELUBE	0.00	EA	279.16	0.00
MPP	000564302	HOSE	1W0800 BREATHER GP	0.00	EA	0.00	0.00
MPP	000564328	HOSE ASSY	13.2 INCHES	0.00	EA	0.00	0.00
MPP	000564344	BEARING, CONN ROD, STD	PISTON & ROD GP - 13:1 RATIO	0.00	EA	0.00	0.00
MPP	000564369	REGULATOR, TEMPERATURE	LINES-GP OIL COOLER	0.00	EA	0.00	0.00
MPP	000564385	ROCKER ARM ASSY	BASIC ENGINE	0.00	EA	0.00	0.00
MPP	000564401	SEAL - LIP	COOLING SYSTEM	0.00	EA	0.00	0.00
MPP	000564427	INSERT - ROCKER ARM	ROCKER ARM GP	0.00	EA	0.00	0.00
MPP	000564443	SEAL GP - FACE	PUMP GP - WATER	0.00	EA	0.00	0.00
MPP	000564468	VALVE - ACCESS	VALVE GP - MANUAL	0.00	EA	0.00	0.00
MPP	000564484	SEAL	WATER PUMP	0.00	EA	0.00	0.00
MPP	000564500	PUSHROD	VALVE & INJECTION	0.00	EA	0.00	0.00
MPP	000564526	SEAL O RING - WATER PUMP	COOLING SYSTEM	0.00	EA	0.00	0.00
MPP	000564542	BRIDGE ASSY	VALVE MECHANISM GP	0.00	EA	0.00	0.00
MPP	000564567	SEAL-O-RING	COOLING SYSTEM	0.00	EA	0.00	0.00
MPP	000564583	LEAD ASSY	THERMOCOUPLE	0.00	EA	0.00	0.00
MPP	000564609	CONNECTOR	SENSOR GP - ELECTRONIC	0.00	EA	0.00	0.00
MPP	000564625	THERMOCOUPLE	ELECTRICAL SYSTEM	0.00	EA	0.00	0.00
MPP	000564641	DETECTOR GP - LIQUID	OPERATOR STATION	0.00	EA	0.00	0.00
MPP	000564666	COMPOUND	OPERATION STATION	0.00	EA	0.00	0.00
MPP	000564682	POTENTIOMETER, SURGE PROTECTOR	420 VAC, 40J SURGE SUPPRESSOR	0.00	EA	0.00	0.00
MPP	000564708	CLAMP, COVER	FILTER GP - CENTRIFUGAL	0.00	EA	65.62	0.00
MPP	000564724	REGULATOR, VOLTAGE - KATO	VR760WF3P58HUFS240V60HP	0.00	EA	0.00	0.00
MPP	000564740	ORING	SEAL	0.00	EA	5.12	0.00
MPP	000564765	BEARING	DODGE E	0.00	EA	329.33	0.00
MPP	000564781	KIT, SOLENOID	FOR GUILLOTINE SAFETY EMERGENCY SHUTDOWN	0.00	EA	171.86	0.00
MPP	000564807	LINER	KIT	0.00	EA	120.75	0.00
MPP	000564823	SHAFT, IDLER	MOLOKAI	0.00	EA	35.54	0.00
MPP	000564849	SHAFT, IDLER	MOLOKAI	0.00	EA	68.48	0.00
MPP	000564864	INSERT, LINER		0.00	EA	24.00	0.00
MPP	000564880	INSERT, LINER		0.00	EA	10.66	0.00
MPP	000564906	INSERT, LINER		0.00	EA	14.80	0.00
MPP	000564922	GASKET	FILTER HEAD	0.00	EA	3.30	0.00
MPP	000564948	SHAFT	IDLER	0.00	EA	22.83	0.00
MPP	000564963	SHAFT	IDLER	0.00	EA	74.70	0.00
MPP	000564989	SHAFT	IDLER	0.00	EA	63.94	0.00
MPP	000565002	BEARING	CONNECTING ROD	0.00	EA	20.14	0.00
MPP	000565028	SET, PISTON RING		0.00	EA	41.95	0.00
MPP	000565044	GEAR	CAMSHAFT	0.00	EA	561.00	0.00

NOTE: SOH - Stock on Hand

Source: DARS 3342 Report (as of 5/31/07)

Maui Electric Company, Limited

MATERIALS PHYSICAL INVENTORY
MAALAEA POWER PLANT

WH	STOCK CODE	Item	Description	SOH	Unit	Price/ Unit	Total Cost/ Item
MPP	000565069	GEAR	IDLER	0.00	EA	419.52	0.00
MPP	000565085	GEAR	CAMSHAFT	0.00	EA	583.44	0.00
MPP	000565101	GEAR	IDLER	0.00	EA	409.17	0.00
MPP	000565127	BUSHING	MOLOKAI	0.00	EA	59.37	0.00
MPP	000565143	GASKET	GEAR HOUSING	0.00	EA	22.39	0.00
MPP	000565168	SLEEVE	WEAR	0.00	EA	45.07	0.00
MPP	000565184	VALVE	CROSSHEAD	0.00	EA	26.07	0.00
MPP	000565200	BEARING	MAIN, SET	0.00	EA	1,139.03	0.00
MPP	000565226	HEAD	REBUILT	0.00	EA	625.02	0.00
MPP	000565242	BUSHING	MOLOKAI	0.00	EA	5.43	0.00
MPP	000565267	SOCKET	ROCKER LEVER	0.00	EA	5.70	0.00
MPP	000565283	BUSHING	MOLOKAI	0.00	EA	3.13	0.00
MPP	000565309	PUSHROD	MOLOKAI	0.00	EA	21.82	0.00
MPP	000565325	VALVE	SHUT-OFF	0.00	EA	105.42	0.00
MPP	000565341	PUSHROD	MOLOKAI	0.00	EA	7.61	0.00
MPP	000565366	ACTUATOR	EFC GOVERNOR	0.00	EA	0.00	0.00
MPP	000565382	FERRULE	MOLOKAI	0.00	EA	6.70	0.00
MPP	000565408	GEAR	DRIVE ACCESSORY	0.00	EA	212.83	0.00
MPP	000565424	ACCESS	DRIVE FUEL	0.00	EA	0.00	0.00
MPP	000565440	GASKET	UPPER, SET	0.00	EA	1,177.37	0.00
MPP	000565465	BELT	MOLOKAI	0.00	EA	16.78	0.00
MPP	000565481	BELT	DAYCO	0.00	EA	8.02	0.00
MPP	000565507	BELT	DAYCO	0.00	EA	15.99	0.00
MPP	000565523	GAUGE	OIL PRESSURE	0.00	EA	32.00	0.00
MPP	000565549	GAUGE	OIL TEMPERATURE	0.00	EA	32.00	0.00
MPP	000565564	GAUGE	WATER TEMPERATURE	0.00	EA	32.00	0.00
MPP	000565580	METER	HOUR CRAS77942	0.00	EA	32.60	0.00
MPP	000565606	HOSE	FLEXIBLE	0.00	EA	30.14	0.00
MPP	000565622	HOSE	FLEXIBLE	0.00	EA	52.35	0.00
MPP	000565663	CARTRIDGE	TURBOCHARGER	0.00	EA	39,580.80	0.00
MPP	000565689	CYLINDER	AIR	0.00	EA	91.95	0.00
MPP	000565705	SEAL	OIL	0.00	EA	29.48	0.00
MPP	000565721	PISTON	KIT	0.00	EA	182.00	0.00
MPP	000565747	SWITCHGEAR	LUBE OIL	0.00	EA	85.00	0.00
MPP	000565762	SWITCHGEAR	LUBE OIL W/ELEMENT	0.00	EA	93.50	0.00
MPP	000565788	THERMOCOUPLE	MOLOKAI	0.00	EA	22.00	0.00
MPP	000565804	INJECTOR, FUEL	MOLOKAI	0.00	EA	106.60	0.00
MPP	000565820	JUMPER LINE	MOLOKAI	0.00	EA	6.29	0.00
MPP	000565846	JUMPER LINE	MOLOKAI	0.00	EA	6.29	0.00
MPP	000565861	SCREEN	AIR FILTER	0.00	EA	319.00	0.00
MPP	000565887	SCREEN	AIR FILTER	0.00	EA	214.84	0.00
MPP	000565903	HOSE	BRAIDED	0.00	EA	455.86	0.00
MPP	000565929	LINER	ROTOR	0.00	EA	3.21	0.00
MPP	000565945	FILTER	ULTIPOR, PALL	0.00	EA	170.26	0.00
MPP	000565960	FILTER	FUEL	0.00	EA	26.82	0.00
MPP	000565986	FILTER	1W4136	0.00	EA	26.11	0.00
MPP	000566000	FILTER	MAIN FUEL MANIFOLD	0.00	EA	309.07	0.00
MPP	000566026	FILTER	2020TM	0.00	EA	13.82	0.00
MPP	000566042	FILTER	FUEL, PRIMARY	0.00	EA	7.50	0.00
MPP	000566067	ELEMENT, (FUEL FILTER)	FUEL PUMP FOR CATERPILLAR UNIT 1 & 2	0.00	EA	18.88	0.00
MPP	000566083	LOCKNUT	.375-24	0.00	EA	0.00	0.00
MPP	000566109	GASKET KIT - PUMP	STARTING SYSTEM	0.00	EA	11.95	0.00
MPP	000566125	MAGNETIC PICK ASSY	ELECTRICAL SYSTEM	0.00	EA	2.43	0.00
MPP	000566141	SWITCH ASSY	PRELUDE PRESS	0.00	EA	0.00	0.00
MPP	000566166	SEAL-O-RING	COOLING SYSTEM	0.00	EA	0.00	0.00
MPP	000566182	SEAL-O-RING	COVER	0.00	EA	0.00	0.00
MPP	000566208	SCREW, BOLT	COVER GP- VALVE MECH	0.00	EA	0.00	0.00
MPP	000566224	GASKET, COVER	CENTRAL STRUCTURE	0.00	EA	0.00	0.00
MPP	000566240	WASHER	COVER GP - CENTRAL STRUCTURE	0.00	EA	0.00	0.00
MPP	000566265	GASKET	COVER GP - CENTRAL STRUCTURE	0.00	EA	8.96	0.00
MPP	000566281	SEAL-O-RING	COVER GP - VALVE MECHANISM	0.00	EA	8.45	0.00
MPP	000566307	SEAL-O-RING	COVER GP-CRANKCASE SIDE	0.00	EA	0.00	0.00
MPP	000566323	GASKET	CYLINDER HEAD GP	0.00	EA	0.00	0.00
MPP	000566349	SEAL-O-RING	COVER GP- VALVE MECHANISM	0.00	EA	0.00	0.00
MPP	000566364	SEAL-O-RING	PAN GP - OIL	0.00	EA	0.00	0.00
MPP	000566380	SEAL-O-RING	COVER GP-VALVE MECHANISM	0.00	EA	0.00	0.00
MPP	000566406	RING, PISTON	PISTON & ROD 13:1 RATIO	0.00	EA	0.00	0.00

NOTE: SOH - Stock on Hand

Source: DARS 3342 Report (as of 5/31/07)

Maui Electric Company, Limited

MATERIALS PHYSICAL INVENTORY
MAALAEA POWER PLANT

WH	STOCK CODE	Item	Description	SOH	Unit	Price/ Unit	Total Cost/ Item
MPP	000566422	RING, PISTON	PISTON & ROD 13:1 RATIO	0.00	EA	0.00	0.00
MPP	000566448	RING, PISTON	PISTON & ROD 13:1 RATIO	0.00	EA	0.00	0.00
MPP	000566463	RING, PISTON	PISTON & ROD 13:1 RATIO	0.00	EA	0.00	0.00
MPP	000566489	SEAL-O-RING	FILTER GP - CENTRIFUGAL	0.00	EA	18.83	0.00
MPP	000566505	SEAL-O-RING	ROCKER ARM	0.00	EA	0.00	0.00
MPP	000566521	SEAL-O-RING	FILTER GP - CENTRIFUGAL	0.00	EA	13.15	0.00
MPP	*000566547*	*BUTTON*	*ROCKER ARM*	*0.00*	*EA*	*0.00*	*0.00*
MPP	000566562	SEAL-O-RING	LINE - ENGINE	0.00	EA	0.00	0.00
MPP	000566588	CONTROL	AGL	0.00	EA	1,502.09	0.00
MPP	000566604	CONTROL	LSS	0.00	EA	1,694.49	0.00
MPP	000566620	POTENTIOMETER	MOTOR OPERATED	0.00	EA	576.48	0.00
MPP	000566646	POTENTIOMETER	MOTOR OPERATED	0.00	EA	576.48	0.00
MPP	000566661	RELAY	POTTER & BRUMFIELD IDC 120V	0.00	EA	36.50	0.00
MPP	000566687	RELAY	POTTER & FRUMFILED 24 VDC	0.00	EA	32.27	0.00
MPP	000566703	RELAY	POTTER & BRUMFIELD	0.00	EA	76.48	0.00
MPP	000566729	GASKET	MOLOKAI	0.00	EA	1.06	0.00
MPP	000566745	GASKET	CASING	4.00	EA	15.62	62.50
MPP	000566760	GASKET	ADAPTER	13.00	EA	2.28	29.59
MPP	000566786	ORING	IMPELLER	9.00	EA	7.20	64.77
MPP	000566802	ORING	IMPELLER	16.00	EA	6.84	109.36
MPP	000566828	GASKET, CASING	(GOULD PUMP_	2.00	EA	0.00	0.00
MPP	000566844	ORING	IMPELLER	5.00	EA	0.00	0.00
MPP	000566869	O-RING, IMPELLER	(COULD PUMP)	6.00	EA	0.00	0.00
MPP	000566885	GASKET	CASING	4.00	EA	0.00	0.00
MPP	000566901	GASKET	CASING	1.00	EA	0.00	0.00
MPP	000566927	GASKET	CASING	2.00	EA	0.00	0.00
MPP	000566943	SEAL	MECHANICAL, 8IT SINGLE	1.00	EA	0.00	0.00
MPP	000566968	SEAL	MECHANICAL, CR 8-IT XF51 10151 (GOULD	3.00	EA	581.56	1,744.68
MPP	000566984	SEAL	MECHANICAL, CRANE 8-IT	4.00	EA	0.00	0.00
MPP	000567008	PROTECTOR	MOTOR CIRCUIT, 3P-600V-60A CB	1.00	EA	719.66	719.66
MPP	000567024	ACTUATOR, PNEUMATIC	MODEL 79U-006 WITH LIMIT SWITCH	2.00	EA	494.41	988.83
MPP	000567040	PRE-AMPLIFIER	MODULE 079288	1.00	EA	0.00	0.00
MPP	000567065	CELL	CONDUCTIVITY	4.00	EA	328.08	1,312.33
MPP	000567070	CELL, CONDUCTIVITY	WITH 20 FT CABLE	6.00	EA	369.90	2,219.42
MPP	000567081	VALVE	BALL, 1/2", 1000#, ALLOY 20 MATERIAL	4.00	EA	208.46	833.83
MPP	000567107	VALVE	BALL, 3/4", 1000#, ALLOY 20 MATERIAL	12.00	EA	308.08	3,696.97
MPP	000567123	PIPE	SMLS, 3/4", SCH 80	83.00	FT	33.76	2,802.42
MPP	000567149	PIPE	SMLS, 1/2", SCH 80	60.00	EA	23.65	1,419.00
MPP	000567164	ELBOW	SW 90, 3000#, 3/4"	7.00	EA	74.59	522.11
MPP	000567180	ELBOW	THRD, 90, 3000#, 3/4"	5.00	EA	91.31	456.55
MPP	000567206	ELBOW	SW, 90, 3000#, 1/2"	5.00	EA	37.02	185.10
MPP	000567222	ELBOW	THRD, 90, 3000#, 1/2"	5.00	EA	62.09	310.45
MPP	000567248	ELBOW	SW, 45, 3000#, 3/4"	6.00	EA	58.66	351.96
MPP	000567263	ELBOW	THRD, 45, 3000#, 3/4"	6.00	EA	93.08	558.48
MPP	000567289	ELBOW	SW, 45, 3000#, 1/2"	6.00	EA	49.09	294.54
MPP	000567305	ELBOW	THRD, 45, 3000#, 1/2"	6.00	EA	72.18	433.08
MPP	000567321	UNION	SW, 3000#, 3/4"	6.00	EA	73.84	443.04
MPP	000567347	UNION	THRD, 3000#, 3/4"	10.00	EA	72.28	722.80
MPP	000567362	UNION	SW, 3000#, 1/2"	6.00	EA	61.36	368.16
MPP	000567388	UNION	THRD, 3000#, 1/2"	4.00	EA	65.94	263.76
MPP	000567404	COUPLING	SW, 3000#, 3/4"	4.00	EA	25.62	102.50
MPP	000567420	COUPLING	THRD, 3000#, 3/4"	0.00	EA	22.46	0.00
MPP	000567446	COUPLING	SW, 3000#, 1/2"	6.00	EA	19.03	114.18
MPP	000567461	COUPLING	THRD, 3000#, 1/2"	6.00	EA	36.43	218.55
MPP	000567487	NIPPLE	TBE, SCH 80, 1/2" X 6"	7.00	EA	30.99	216.93
MPP	000567489	GASKET, GORE TEX PTFE 1/2" FLANGE	1/2" I.D. PIPE SIZE 1/8"	20.00	EA	0.00	0.00
MPP	000567491	GASKET, GORE TEX PTFE 3/4" FLANGE	3/4" I.D. PIPE SIZE 1/8" THICK	17.00	EA	0.00	0.00
MPP	000567493	GASKET, GORE TEX PTFE 1" FLANGE	1" I.D. PIPE SIZE 1/8" THICK	10.00	EA	12.67	126.67
MPP	000567495	VALVE, DIAPHRAGM, ITT DIA-FLOW 3/4"	LINED	2.00	EA	333.31	666.62
MPP	000567503	NIPPLE	PBE, SCH 80, 1/2" X 6"	4.00	EA	44.02	176.06
MPP	000567529	NIPPLE	TBE, SCH 80, 3/4" X 6"	3.00	EA	48.94	146.81
MPP	000567545	NIPPLE	PBE, SCH 80, 3/4" X 6"	4.00	EA	33.97	135.89
MPP	000567560	PUMP	CHEMICAL, MILTON ROY	2.00	EA	895.25	1,790.50
MPP	000567586	NUT	HEX, 3/4 - 10	42.00	EA	0.00	0.00
MPP	000567602	BOLT	HEX, 5/8-11 X 1-1/2, 316CS	25.00	EA	0.00	0.00
MPP	000567628	BOLT	HEX, 5/8-11 X 2, 316CS	25.00	EA	0.00	0.00
MPP	000567644	LOCKWASHER	316, 3/4"	100.00	EA	0.73	73.00

NOTE: SOH - Stock on Hand

Source: DARS 3342 Report (as of 5/31/07)

Maui Electric Company, Limited

MATERIALS PHYSICAL INVENTORY
MAALAEA POWER PLANT

WH	STOCK CODE	Item	Description	SOH	Unit	Price/ Unit	Total Cost/ Item
MPP	000567669	BOLT	HEX, 3/4-10 X 1-1/2, 316CS	10.00	EA	0.00	0.00
MPP	000567685	LOCKWASHER	316CS, 5/8"	49.00	EA	0.38	18.85
MPP	000567701	BOLT	HEX, 1/2-13 X 1-1/2, 316CS	44.00	EA	0.00	0.00
MPP	000567727	BOLT	HEX, 1/2-13 X 2, 316CS	39.00	EA	0.00	0.00
MPP	000567743	LOCKWASHER	316CS, 1/2"	120.00	EA	0.00	0.00
MPP	000567768	BOLT	HEX, 3/4 - 10 X 2, 316CS	2.00	EA	0.00	0.00
MPP	000567784	WASHER	FLAT, 3/4, 316CS	84.00	EA	1.16	97.44
MPP	000567800	NUT	HEX, USS, 5/8 X 11, 316CS	50.00	EA	1.35	67.70
MPP	000567826	WASHER	FLAT, 5/8, 316CS	32.00	EA	0.51	16.33
MPP	000567842	WASHER	FLAT, 1/2, 316CS	170.00	EA	0.33	56.10
MPP	000567867	NUT	HEX, 1/2 - 13, 316CS	70.00	EA	0.62	43.40
MPP	000567883	FILTER	AIR (DEGASIFIER), 24" X 24" X 2"	339.00	EA	7.33	2,485.79
MPP	000567909	FLANGE	150#, S/W, 316SS, 1/2"	7.00	EA	0.00	0.00
MPP	000567925	FLANGE	150#, S/W, 316SS, 3/4"	9.00	EA	12.41	111.69
MPP	000567941	GASKET	TEFLON, 1/2"	12.00	EA	0.00	0.00
MPP	000567966	GASKET	TEFLON, 3/4"	19.00	EA	0.00	0.00
MPP	000567982	FILTER, PLEATED, 20" X 20" X 2",	FARR 30/30, (GLEGG WATER TREATMENT)	376.00	EA	5.10	1,918.95
MPP	000568006	VALVE	BUTTERFLY, 2", BRAY	0.00	EA	119.78	0.00
MPP	000568022	TFE SPOOL FE PIPE, LINED	WITH FLANGE, GLEGG WATER	0.00	EA	304.15	0.00
MPP	000568048	VALVE	BALL	4.00	EA	198.44	793.76
MPP	000568063	VALVE, BUTTERFLY, 3"	(MUELLER)	2.00	EA	347.04	694.07
MPP	000568089	CHECK VALVE	FLANGE SPRING LOADED - 1"	2.00	EA	1,490.26	2,980.52
MPP	000568105	PRE-FILTER	GT INLET AIR - FULL SIZE	0.00	EA	0.00	0.00
MPP	000568121	PRE-FILTER	GT INLET AIR - HALF SIZE	0.00	EA	0.00	0.00
MPP	000568147	FINAL FILTER W/ GASKET	GT INLET AIR - FULL SIZE	58.00	EA	53.18	3,084.57
MPP	000568162	FINAL FILTER W/ GASKET	GT INLET AIR - HALF SIZE	23.00	EA	53.36	1,227.28
MPP	000568188	FILTER	WATER SUPPLY	21.00	EA	0.00	0.00
MPP	000568204	FILTER	COOLING AIR INLET	120.00	EA	81.37	9,764.36
MPP	000568220	MIST SEPARATOR #1	GT LUBE OIL SYSTEM	0.00	EA	0.00	0.00
MPP	000568246	GASKET	L.O. MIST SEPARATOR #1	0.00	EA	0.00	0.00
MPP	000568261	MIST SEPARATOR #3 ELEMENT	DOLLINGER - MODEL # AE-229-58	2.00	EA	669.76	1,339.52
MPP	000568287	GASKET	L.O. MIST SEPARATOR #3	1.00	EA	0.00	0.00
MPP	000568303	FILTER	L.O. SUPPLY & SCAVENGE	9.00	EA	0.00	0.00
MPP	000568329	GASKET	L.O. SUPPLY & SCAVENGE	12.00	EA	0.00	0.00
MPP	000568345	FILTER	GENERATOR LUBE OIL SYSTEM	33.00	EA	129.46	4,272.05
MPP	000568360	FILTER LINER	GENERATOR LUBE OIL MIST SEPARATOR	1.00	EA	0.00	0.00
MPP	000568386	PRIMARY FILTER MEDIA	GENERATOR L.O. MIST SEPARATOR	2.00	EA	20.80	41.60
MPP	000568402	PRE-FILTER MEDIA	SECONDARY,	1.00	EA	0.00	0.00
MPP	000568428	FILTER	LIQUID FUEL SYSTEM	117.00	EA	23.52	2,752.20
MPP	000568444	FILTER	FUEL SHUTOFF VALVE ACTUATION	5.00	EA	0.00	0.00
MPP	000568469	ORING	FUEL SHUTOFF VALVE ACTUATION FILTER	6.00	EA	0.00	0.00
MPP	000568485	ORING	FUEL SHUTOFF VALVE ACTUATION FILTER	6.00	EA	0.00	0.00
MPP	000568501	FILTER	OIL TANK BREATHER (FLT2)	6.00	EA	0.00	0.00
MPP	000568527	FILTER	SUPPLY (FLT3)	11.00	EA	82.03	902.29
MPP	000568543	ORING	SUPPLY FILTER	7.00	EA	8.37	58.62
MPP	000568568	FILTER	CLUTCH COOLING OIL RETURN (FLT4)	5.00	EA	0.00	0.00
MPP	000568584	FILTER	HYDRAULIC START RETURN OIL (FLT5)	6.00	EA	0.00	0.00
MPP	000568600	FILTER	CLUTCH COOLING OIL SUPPLY (FLT6)	4.00	EA	0.00	0.00
MPP	000568626	FILTER	HYD START PUMP SERVO OIL (FLT7)	6.00	EA	0.00	0.00
MPP	000568642	GASKET	FILTER CAN	24.00	EA	0.00	0.00
MPP	000568667	FILTER	CONTROL OIL	16.00	EA	85.14	1,362.28
MPP	000568683	FILTER	WATER WASH SUPPLY	6.00	EA	0.00	0.00
MPP	000568709	ORING	WATER WASH SUPPLY	6.00	EA	0.00	0.00
MPP	000568725	BEARING	GENERATOR	2.00	EA	0.00	0.00
MPP	000568741	SEAL	OIL (INNER & OUTER)	4.00	EA	0.00	0.00
MPP	000568766	SEAL	BEARING	2.00	EA	0.00	0.00
MPP	000568782	SEAL	AIR	2.00	EA	0.00	0.00
MPP	000568808	DIODE	FORWARD	6.00	EA	0.00	0.00
MPP	000568824	DIODE	REVERSED	6.00	EA	0.00	0.00
MPP	000568840	FUSE	GENERATOR	12.00	EA	0.00	0.00
MPP	000568865	RTD	BEARING	1.00	EA	0.00	0.00
MPP	000568881	REGULATOR	VOLTAGE	2.00	EA	0.00	0.00
MPP	000568907	TRANSMITTER	GENERATOR	1.00	EA	0.00	0.00
MPP	000568923	RECEIVER	GENERATOR	1.00	EA	0.00	0.00
MPP	000568949	HARNESS	CABLE	1.00	EA	0.00	0.00
MPP	000568964	TEST LAMP	PORTABLE U/V	0.00	EA	0.00	0.00
MPP	000568980	TESTER	THERMAL DETECTOR	0.00	EA	0.00	0.00

NOTE: SOH - Stock on Hand

Source: DARS 3342 Report (as of 5/31/07)

Maui Electric Company, Limited

MATERIALS PHYSICAL INVENTORY
MAALAEA POWER PLANT

WH	STOCK CODE	Item	Description	SOH	Unit	Price/ Unit	Total Cost/ Item
MPP	000569004	ARMING TOOL	ELEC. VALVE ACTUATOR	0.00	EA	0.00	0.00
MPP	000569020	MODULE	CENTRAL CONTROL	1.00	EA	0.00	0.00
MPP	000569046	MODULE	POWER CONVERTER	1.00	EA	0.00	0.00
MPP	000569061	MODULE	BUSS CIRCUIT	1.00	EA	0.00	0.00
MPP	000569087	MODULE	ANALOG SENSOR	0.00	EA	0.00	0.00
MPP	000569103	MODULE	3B CIRCUIT	2.00	EA	0.00	0.00
MPP	000569129	MODULE	OUTPUT/OUTPUT	0.00	EA	0.00	0.00
MPP	000569145	MODULE	SUPPLEMENTAL RELAY	3.00	EA	0.00	0.00
MPP	000569160	MODULE	CONTACT INPUT	2.00	EA	296.40	592.80
MPP	000569186	ASSEMBLY	POWER SUPPLY	1.00	EA	0.00	0.00
MPP	000569202	FUSES	CNTRL	4.00	EA	0.00	0.00
MPP	000569228	FUSES	CNTRL	0.00	EA	0.00	0.00
MPP	000569244	SENSOR	HIGH TEMPERATURE U/V SENSOR TUBE	2.00	EA	1,669.69	3,339.37
MPP	000569269	CONTROLLER	U/V DETECTION	1.00	EA	0.00	0.00
MPP	000569285	OUTPUT ASSY	AUXILARY RELAY	1.00	EA	0.00	0.00
MPP	000569301	VALVE ACTUATOR	ELECTRIC LATCHING	2.00	EA	0.00	0.00
MPP	000569327	OVERRIDE ACTUATOR	MANUAL LOCAL	1.00	EA	0.00	0.00
MPP	000569343	SWITCH	PRESSURE OPERATED	1.00	EA	0.00	0.00
MPP	000569368	NOZZLE	BAFFLE DISCHARGE	2.00	EA	0.00	0.00
MPP	000569384	NOZZLE	BAFFLE DISCHARGE	2.00	EA	0.00	0.00
MPP	000569400	STROBE	ALARM	1.00	EA	0.00	0.00
MPP	000569426	HORN	ALARM	1.00	EA	0.00	0.00
MPP	000569442	SIREN	ALARM	1.00	EA	0.00	0.00
MPP	000569467	DETECTOR	THERMAL	2.00	EA	0.00	0.00
MPP	000569483	STROBE	ALARM	1.00	EA	0.00	0.00
MPP	000569509	DETECTOR	THERMAL	2.00	EA	0.00	0.00
MPP	000569525	CAPACITOR	70.0U 330V METFLM	1.00	EA	0.00	0.00
MPP	000569541	CAPACITOR	15U 350V NON-PCB	1.00	EA	0.00	0.00
MPP	000569566	COMPOUND	HEAT SINK	2.00	EA	0.00	0.00
MPP	000569582	FUSE	1.0A	10.00	EA	0.00	0.00
MPP	000569608	FUSE	3.0A	15.00	EA	0.00	0.00
MPP	000569624	FUSE	300A	1.00	EA	0.00	0.00
MPP	000569640	SCR	600V	1.00	EA	0.00	0.00
MPP	000569665	LOGIC CMOS	REGULATOR	1.00	EA	0.00	0.00
MPP	000569681	BOOST CIRCUIT	REGULATOR	1.00	EA	0.00	0.00
MPP	000569707	CARD	REGULATOR	1.00	EA	0.00	0.00
MPP	000569723	TRANSFORMER ASSY	REGULATOR	1.00	EA	0.00	0.00
MPP	000569749	FUSE	SEMICONDUCTOR	0.00	EA	0.00	0.00
MPP	000569764	LIGHT EMITTING DIODE	INDICATOR RED	2.00	EA	0.00	0.00
MPP	000569780	DIODE	A430E, 500V 1000A	1.00	EA	0.00	0.00
MPP	000569806	SCR	C390EX131, 500V 550A.AV	1.00	EA	0.00	0.00
MPP	000569822	CONTROL	RECTIFIER	1.00	EA	0.00	0.00
MPP	000569848	SCR GD	6 PULSE RECTIFIER	1.00	EA	0.00	0.00
MPP	000569863	SNUB	RECTIFIER	1.00	EA	0.00	0.00
MPP	000569889	CAPACITOR	50 U 330V MTFLM 2"D/SP	1.00	EA	0.00	0.00
MPP	000569905	FUSE	6.0A 250V ABC-6	5.00	EA	0.00	0.00
MPP	000569921	FUSE	10A 250V ABC-10	3.00	EA	0.00	0.00
MPP	000569947	FUSE	250A250V W/ACT A025R25OIL	2.00	EA	0.00	0.00
MPP	000569962	FUSE	300A250V W/ACT A025R30OIL	1.00	EA	0.00	0.00
MPP	000569988	FUSE	500A250V W/ACT A025R50OIL	4.00	EA	95.37	381.47
MPP	000570002	TRANSFORMER PKG	LTR & MFR	2.00	EA	0.00	0.00
MPP	000570028	BASE DR	INVERTED	1.00	EA	0.00	0.00
MPP	000570044	GATE DRIVE	AC STATIC SWITCH	1.00	EA	0.00	0.00
MPP	000570069	CONTROL	SYS	1.00	EA	0.00	0.00
MPP	000587654	RING, EXTERNAL SNAP, FUEL INJECTION PUMP	ADJUSTING DS01298,9K	15.00	EA	1.11	16.67
MPP	000597476	O-RING	STANDARD, BUNA N, TUTHILL PUMP	8.00	EA	3.91	31.25
MPP	000597492	COVER	GUARD PIECE & NOSE CONE	1.00	EA	0.01	0.01
MPP	000597497	RING, INTERNAL SNAP	FOR FUEL INJECTION PUMP ADJUSTING DEVICE	2.00	EA	0.00	0.00
MPP	000597500	PIN	TAPER, D501374K-3 811A	14.00	EA	20.11	281.49
MPP	000597526	PIPE JOINT	FLEXIBLE, D501374K-3, 811A	6.00	EA	103.85	623.11
MPP	000597534	SLEEVE	CLAW, ROTATING PART TV57H-C	2.00	EA	1,307.55	2,615.11
MPP	000597542	BOLT	HEX	20.00	EA	0.00	0.00
MPP	000597559	MOTOR	BALDOR	1.00	EA	0.00	0.00
MPP	000597617	PISTON	SERVO	1.00	EA	2,198.04	2,198.04
MPP	000597625	HOSE	FUEL RETURN	3.00	EA	0.00	0.00

NOTE: SOH - Stock on Hand

Source: DARS 3342 Report (as of 5/31/07)

Maui Electric Company, Limited

MATERIALS PHYSICAL INVENTORY
MAALAEA POWER PLANT

WH	STOCK CODE	Item	Description	SOH	Unit	Price/ Unit	Total Cost/ Item
MPP	000597633	LINK	SWITCH GEAR	3.00	EA	0.00	0.00
MPP	000597641	HUB	LOVEJOY COUPLING	2.00	EA	0.00	0.00
MPP	000597658	DISK ASSEMBLY	STEM, 1"	1.00	EA	0.00	0.00
MPP	000597666	KIT	PACKING, 1"	1.00	EA	0.00	0.00
MPP	000597674	VALVE	EDWARDS 1"	1.00	EA	0.00	0.00
MPP	000597676	BRACKET, MOUNTING	FOR HRSG FISHER VALVES, MODEL #4211-1,	5.00	EA	4.90	24.50
MPP	000597677	ARM, OPERATING	FOR HRSG FISHER VALVES, POSITION	3.00	EA	0.00	0.00
MPP	000597678	BRACKET, STEM MOUNTING	FOR HRSG FISHER VALVES, POSITION	4.00	EA	0.00	0.00
MPP	000597679	SLEEVE	FOR HRSG FISHER VALVES, POSITION	7.00	EA	0.00	0.00
MPP	000597680	SPRING, TORSION	FOR HRSG FISHER VALVES, POSITION	7.00	EA	0.00	0.00
MPP	000597681	ASSEMBLY, LEVER, 1/8 THRU 4-1/4 TVL	FOR HRSG FISHER VALVES, POSITION	1.00	EA	0.00	0.00
MPP	000597682	BALL VALVE	FLANGED TYPE, 2"	0.00	EA	0.00	0.00
MPP	000597708	ACTUATOR	BALL VALVE, NELES JAMESBURY	1.00	EA	565.59	565.59
MPP	000597716	DIAPHRAGM	BALL VALVE	0.00	EA	0.00	0.00
MPP	000597724	VALVE	SOLENOID	7.00	EA	72.68	508.78
MPP	000597732	COIL	NUMATICS	2.00	EA	46.43	92.85
MPP	000597740	BELLOWS	EXHAUST	2.00	EA	273.73	547.46
MPP	000597757	SWITCH PACK KIT	ITT ADVANTAGE; SIZE: 3/4" (DNS0)	1.00	EA	259.36	259.36
MPP	000597765	FLOW VALVE, COMPLETE	181/MIN SOLENOID VALVE BLOCK,	4.00	EA	94.45	377.81
MPP	000597781	PACKING	F.O. DRAIN PIPE, D501397K-2 812B	173.00	EA	0.77	133.35
MPP	000597799	CLAMP, ASSEMBLY	MIST SEPARATOR, FIG. 6, TV57H-C	3.00	EA	55.20	165.61
MPP	000597807	STUD BOLT	CYLINDER COVER BONNET, D500162K	0.00	EA	0.00	0.00
MPP	000597815	FLANGE	CYLINDER COVER BONNET, D500162K	0.00	EA	0.00	0.00
MPP	000597823	VALVE	LIFT CHECK	1.00	EA	200.37	200.37
MPP	000597872	REPAIR KIT	FLANGED BALL VALVE	4.00	EA	81.60	326.39
MPP	000597906	DRAIN LINE	FLEXIBLE NOZZLE, FUEL INJECTION LSV 13-6	0.00	EA	0.00	0.00
MPP	000597914	RELAY	4-POLE WITH OUT CARTRIDGE AC 120/60	2.00	EA	44.00	88.00
MPP	000597930	LINER	CASING, F.O. CIRCULATING PIMP - VIKING	1.00	EA	229.15	229.15
MPP	000597948	ENDPLATE	F.O. CIRCULATING PUMP - VIKING	4.00	EA	57.03	228.11
MPP	000597955	KEY	LINER, F.O. CIRCULATING PUMP - VIKING	2.00	EA	0.00	0.00
MPP	000597963	BOARD	POWER SUPPLY (5V/30A)	1.00	EA	0.00	0.00
MPP	000597971	BOARD	POWER SUPPLY (12V/12.5A)	1.00	EA	0.00	0.00
MPP	000597989	BOARD	POWER SUPPLY (21V/6.5A)	1.00	EA	0.00	0.00
MPP	000597997	BOARD	POWER SUPPLY (5V/60A)	1.00	EA	0.00	0.00
MPP	000598003	BOARD	POWER SUPPLY (5V/20A)	1.00	EA	0.00	0.00
MPP	000598011	BOARD	POWER SUPPLY (5V/30A)	1.00	EA	0.00	0.00
MPP	000598029	BOARD	POWER SUPPLY (-9V/3.8A)	1.00	EA	410.80	410.80
MPP	000598037	BOARD	POWER SUPPLY (12V/5A)	1.00	EA	0.00	0.00
MPP	000598045	BOARD	POWER SUPPLY (15V/2A)	1.00	EA	0.00	0.00
MPP	000598052	BOARD	POWER SUPPLY (15V/2A, 5V/2A)	2.00	EA	599.04	1,198.08
MPP	000598060	BOARD	POWER SUPPLY (24V/12.5, 5V/2A)	0.00	EA	0.00	0.00
MPP	000598078	BOARD	POWER SUPPLY (24V/17.5A)	1.00	EA	0.00	0.00
MPP	000598086	BOARD	POWER SUPPLY (24V/3A)	1.00	EA	0.00	0.00
MPP	000598094	BOARD	POWER SUPPLY (24V/120MA)	1.00	EA	0.00	0.00
MPP	000598102	FV CONVERTER	ANALOG MODULES REF. FV5530	1.00	EA	0.00	0.00
MPP	000598110	ISOLATOR	INPUT, REF. ISX5510 ANALOG MODULE	1.00	EA	0.00	0.00
MPP	000598128	ISOLATOR	OUTPUT REF. ISY5520 ANALOG MODULE	1.00	EA	0.00	0.00
MPP	000598136	VOTER	ANALOG REF. AY5500 ANALOG MODULE	1.00	EA	0.00	0.00
MPP	000598144	MONITOR	RATE REF. RM5540 ANALOG MODULE	1.00	EA	0.00	0.00
MPP	000598151	MONITOR	RATE REF. RM5550 ANALOG MODULE	1.00	EA	0.00	0.00
MPP	000598169	MODULE	RELAY REF. RY5510 ANALOG MODULE	1.00	EA	0.00	0.00
MPP	000598177	MODULE	CHECK PIN REF. CP5501 ANALOG MODULE	1.00	EA	0.00	0.00
MPP	000598185	MODULE	CHECK PIN REF. CP5501 ANALOG MODULE	1.00	EA	0.00	0.00
MPP	000598193	RECEIVER	SPEED REF. SR100 ANALOG MODULE	1.00	EA	0.00	0.00
MPP	000598201	SEPARATION UNIT	GALVANIC REF. GSI130 VIBRATION MONITOR	1.00	EA	0.00	0.00
MPP	000598342	RELAY	REF. MY2N DC12V	2.00	EA	0.00	0.00
MPP	000598359	RELAY	REF. MY2N DC5V	1.00	EA	0.00	0.00
MPP	000598367	RELAY	REF. LY2ZN CSI-7500 CONTROL SYSTEM	2.00	EA	0.00	0.00
MPP	000598375	FUSE, REF. P410L, ITEM # 2-8-20		20.00	EA	13.87	277.33
MPP	000598383	FUSE, CONTROL	REF. SP430L 3.0A	10.00	EA	20.80	208.00
MPP	000598391	FUSE, CONTROL	REF. SP450I 5 AMP	10.00	EA	20.80	208.00
MPP	000598409	ROCKER ARM - INLET	VALVE GEAR	0.00	EA	0.00	0.00
MPP	000598417	FUSE, CONTROL	REF. P420L 2.0A	10.00	EA	0.00	0.00
MPP	000598425	LAMP, LED	KEYBOARD REF. 31-963.4, 28V, 40MA	20.00	EA	0.00	0.00
MPP	000598433	LAMP	130V VOLTAGE - PLT EXIT SIGNS	78.00	EA	4.05	315.60
MPP	000598441	BULB	EMERGENCY LIGHT, PLT	13.00	EA	15.56	202.31
MPP	000598458	BALLAST	100 WATTS, HPS MULTI-TAP	9.00	EA	80.96	728.63

NOTE: SOH - Stock on Hand

Source: DARS 3342 Report (as of 5/31/07)

Maui Electric Company, Limited

MATERIALS PHYSICAL INVENTORY
MAALAEA POWER PLANT

WH	STOCK CODE	Item	Description	SOH	Unit	Price/ Unit	Total Cost/ Item
MPP	000598466	BULB	FLOURESCENT, COOL WHITE, 40W, BI-PIN	90.00	EA	1.39	125.15
MPP	000598474	ISOLATION UNIT	VIBRATION MONITOR MODULE, REF. VX100	0.00	EA	0.00	0.00
MPP	000598482	MODULE	VIBRATION PROCESSOR, REF. UVC656	1.00	EA	0.00	0.00
MPP	000598490	MODULE	DUAL CHANNEL VIBRATION PROCESSOR	1.00	EA	0.00	0.00
MPP	000598508	MODULE	TRACKING FILTER, REF. TFM677	1.00	EA	0.00	0.00
MPP	000598516	MODULE	RECTIFIER REF. ABB007, VIBRATION MODULE	1.00	EA	0.00	0.00
MPP	000598524	MODULE	LEVEL DETECTOR & DISPLAY, REF. PLD772	1.00	EA	2,620.80	2,620.80
MPP	000598532	MODULE	CALIBRATION REF. AMC215	1.00	EA	0.00	0.00
MPP	000598540	CPU	(GCU) REF. DVE-486-/12 DIGITAL MODULE	1.00	EA	0.00	0.00
MPP	000598557	CPU	(EC) REF. DVE-486-/20, DIGITAL MODULE	1.00	EA	0.00	0.00
MPP	000598565	RAM	REF. DVE-441, DIGITAL MODULE	1.00	EA	0.00	0.00
MPP	000598573	INPUT	ANALOG REF. DVME-611, DIGITAL MODULE	1.00	EA	0.00	0.00
MPP	000598581	OUTPUT	ANALOG REF. DVME-624, DIGITAL MODULE	1.00	EA	0.00	0.00
MPP	000598599	INPUT	DISCRETE REF. DVE-528, DIGITAL MODULE	1.00	EA	0.00	0.00
MPP	000598607	OUTPUT	DISCRETE REF. DVE-529, DIGITAL MODULE	1.00	EA	0.00	0.00
MPP	000598615	ETHERNET	REF. DVE-503, DIGITAL MODULE	1.00	EA	0.00	0.00
MPP	000598623	COMMUNICATION, VOTING	REF. CSI-776A, DIGITAL MODULE	1.00	EA	0.00	0.00
MPP	000598631	BOARD, R-BUS	REF. R-BUS7500, DIGITAL MODULE	1.00	EA	0.00	0.00
MPP	000598649	BOARD	RS232C REF. DVE-528, DIGITAL MODULE	0.00	EA	0.00	0.00
MPP	000598656	BOARD	DISCRETE VOTING REF. DV6500,	1.00	EA	0.00	0.00
MPP	000598664	HARD DISK	REF. MS2681SA, CONSOLE PERIPHERAL EQUIP.	1.00	EA	0.00	0.00
MPP	000598672	DISK, FLOPPY	REF. FD-235JS-500	1.00	EA	0.00	0.00
MPP	000598680	PRINTER	CONSOLE PERIPHERAL EQUIPMENT	0.00	EA	0.00	0.00
MPP	000598698	INTERFACE BOARD	OPTICAL/ELEC. REF. IFP6000	1.00	EA	0.00	0.00
MPP	000598706	BOARD, INPUT, ANALOG	AI6000 REMOTE I/O MODULE	0.00	EA	0.00	0.00
MPP	000598714	BOARD, OUTPUT, ANALOG	REF. A06000 REMOTE I/O MODULE	1.00	EA	0.00	0.00
MPP	000598722	BOARD, INPUT, DISCRETE	REF. D16000 REMOTE I/O MODULE	1.00	EA	0.00	0.00
MPP	000598730	DISCRETE OUTPUT BOARD	REF. DO6000 REMOTE I/O MODULE	1.00	EA	3,916.64	3,916.64
MPP	000598748	BOARD	ANNUNCIATOR REF. AMM6000	1.00	EA	0.00	0.00
MPP	000598755	INPUT BOARD	ANALOG REF. AI100 REMOTE I/O INTERFACE	1.00	EA	0.00	0.00
MPP	000598763	OUTPUT BOARD	ANALOG REF. AO100 REMOTE I/O INTERFACE	1.00	EA	0.00	0.00
MPP	000598771	INPUT BOARD	DISCRETE REF. DI100 REMOTE I/O	1.00	EA	0.00	0.00
MPP	000598789	OUTPUT BOARD	DISCRETE REF. DO100 REMOTE I/O INTERFACE	1.00	EA	0.00	0.00
MPP	000598797	CLOCK	MASTER REF. SA-214-IHI-02	1.00	EA	0.00	0.00
MPP	000598805	LINKBOX	ETHERNET REF. MTR-8208	1.00	EA	0.00	0.00
MPP	000598813	TRANSDUCER, KW	ITEM #2-8-3	1.00	EA	0.00	0.00
MPP	000598821	RELAY UNIT	INPUT REF. IRU100	0.00	EA	0.00	0.00
MPP	000598839	RELAY UNIT	OUTPUT REF. ORU100	1.00	EA	0.00	0.00
MPP	000598847	EXCHANGER	HEAT REF. PHE60-HT	1.00	EA	0.00	0.00
MPP	000598854	EXCHANGER	HEAT REF. PHE30-HT	1.00	EA	0.00	0.00
MPP	000598862	EXCHANGER	HEAT REF. PHE10-HTF	1.00	EA	0.00	0.00
MPP	000598870	FAN, COOLING	REF. PLC-US4506N	2.00	EA	0.00	0.00
MPP	000598888	PUSHBUTTON	REF. A3PJ-90E11	2.00	EA	0.00	0.00
MPP	000598896	PUSHBUTTON	REF. M2PJ	2.00	EA	0.00	0.00
MPP	000598904	PUSHBUTTON	REF. ABD122N	2.00	EA	0.00	0.00
MPP	000598912	RELAY	REF. DS 5V	2.00	EA	0.00	0.00
MPP	000598920	RELAY	REF. DS 9V	2.00	EA	0.00	0.00
MPP	000598938	RELAY	REF. DS 15V	2.00	EA	0.00	0.00
MPP	000598946	RELAY	REF. MY2N DC24V	0.00	EA	0.00	0.00
MPP	000599514	Solar Salt, 40 lb/bag	Cargill, International	63.00	BG	8.80	554.68
MPP	000603787	FILTER, WATER (COOLANT)	HANA, MOLOKAI (2 PER)	10.00	EA	18.35	183.53
MPP	000606483	VALVE, 1/4" PLUG, SWAGELOK	(ALL UNITS)	3.00	EA	29.23	87.70
MPP	000606780	VALVE	SUCTION CHECK, MILTON ROY PUMP	2.00	EA	0.00	0.00
MPP	000606798	VALVE	DISCHARGE CHECK, MILTON ROY PUMP	2.00	EA	0.00	0.00
MPP	000606806	SCREW	CAP 316 SS, MILTON ROY PUMP	42.00	EA	0.00	0.00
MPP	000606810	VALVE, WAFER SPHERE, 3" 316SS BODY	SEAT MTFE, PRESSURE ANSI 150	3.00	EA	684.47	2,053.41
MPP	000606811	SWITCH, PRESSURE, UNITED ELECTRIC	(OPTIONS M201, M900, QC-1, 0-500 PSI)	2.00	EA	286.14	572.28
MPP	000606814	SCREEN	TONKAFLOW PUMP	2.00	EA	50.55	101.09
MPP	000606822	O-RING	REVERSE OSMOSIS	60.00	EA	0.00	0.00
MPP	000606830	RIBBON, 3460/3480/3670, 1IN	GENICOM COLOR	17.00	EA	60.48	1,028.11
MPP	000606855	O-RING	WASTE WATER PURIFIER, WSPX 303	2.00	EA	0.00	0.00
MPP	000606863	TRANSFORMER	CONTROL - SIEMENS MCC	1.00	EA	0.00	0.00
MPP	000606871	CLIP KIT	PRIMARY FUSE - MCC	1.00	EA	0.00	0.00

NOTE: SOH - Stock on Hand

Source: DARS 3342 Report (as of 5/31/07)

Maui Electric Company, Limited

MATERIALS PHYSICAL INVENTORY
MAALAEA POWER PLANT

WH	STOCK CODE	Item	Description	SOH	Unit	Price/ Unit	Total Cost/ Item
MPP	000606889	HANDLE	MECHANICAL M-10 - MCC	2.00	EA	0.00	0.00
MPP	000606897	HANDLE	MECHANICAL M-10 - MCC	2.00	EA	0.00	0.00
MPP	000606905	STATOR	NETSCH PUMP	0.00	EA	130.20	0.00
MPP	000606913	RING	RETAINER - NETSCH PUMP	2.00	EA	0.00	0.00
MPP	000606921	O-RING	NETZSCH PUMP	4.00	EA	0.00	0.00
MPP	000606939	SEAL	CONN ROD - NETZSCH PUMP	1.00	EA	0.00	0.00
MPP	000606947	ROD	CONN - NETZSCH PUMP	1.00	EA	0.00	0.00
MPP	000606954	ROTOR	NETZSCH PUMP	0.00	EA	0.00	0.00
MPP	000606962	PIN	RETAINER - NETSCH PUMP	1.00	EA	0.00	0.00
MPP	000607457	BATTERY, AAA		0.00	EA	0.39	0.00
MPP	000608570	LAMP, INDICATING	COLOR: AMBER	4.00	EA	65.18	260.71
MPP	000608984	DETECTOR	TEMPERATURE, MODEL #6702X	16.00	EA	164.52	2,632.39
MPP	000608992	GASKET	RUBBER, CYLINDER HEAD #LSV 11-8	57.00	EA	20.97	1,195.48
MPP	000609008	SWITCH	GENERATOR SWITCH GEAR	5.00	EA	0.00	0.00
MPP	000609016	O-RING	FUEL OIL FILTER #LSV 50-25	8.00	EA	0.17	1.32
MPP	000609024	VALVE	RELIEF 60# WSPX 303	1.00	EA	0.00	0.00
MPP	000609032	SHAFT	EXTENSION - NETZSCH PUMP NU-20	1.00	EA	0.00	0.00
MPP	000609040	ELEMENT	OIL FILTER - IR HOUSE COMPRESSOR	2.00	EA	112.44	224.87
MPP	000609057	TRANSMITTER	DIFFERENTIAL PRESSURE	0.00	EA	1,186.64	0.00
MPP	000609065	ACTUATOR	VALVE - HOKE R.O. SYSTEM	2.00	EA	0.00	0.00
MPP	000609073	MOUNTING KIT	HOKE VALVE ACTUATOR - R.O. SYSTEM	4.00	EA	0.00	0.00
MPP	000609081	SCREW, TURNBUCKLE	HRSG - MASONEILAN CONTROL VALVE	8.00	EA	0.00	0.00
MPP	000609099	SOLUTION	INTERNAL FILLING - GLEGG SYSTEM	2.00	EA	0.00	0.00
MPP	000609107	TAPE	MYLAR STRETCH	6.00	EA	0.00	0.00
MPP	000609115	DIAPHRAGM VALVE	0.5" ITT DIA-FLO	1.00	EA	1,134.97	1,134.97
MPP	000609123	DIAPHRAGM	0.5" PTFE	9.00	EA	79.06	711.57
MPP	000609131	DIAPHRAGM	3112 ACTUATOR	6.00	EA	32.29	193.74
MPP	000609149	DIAPHRAGM VALVE	0.5" ITT DIA-FLO	1.00	EA	1,059.31	1,059.31
MPP	000609156	SWITCH	HIGH TEMPERATURE	3.00	EA	142.29	426.86
MPP	000609164	TRANSFORMER	TOROIDAL	2.00	EA	529.93	1,059.86
MPP	000609172	ELECTRODE	DURAJET INDUSTRIAL	4.00	EA	331.50	1,326.00
MPP	000609180	CABLE	CONNECTION - 12 FT.	2.00	EA	91.59	183.18
MPP	000609958	KNOB, MICRO-SWITCH		14.00	EA	30.00	419.97
MPP	000609966	GAUGE, ASHCROFT, 30" 0 15 PSI		0.00	EA	0.00	0.00
MPP	000609974	BALLAST KIT	CORE & COIL	14.00	EA	87.24	1,221.38
MPP	000609982	BALLAST, ADVANCE	R-2S40TP 2-40 120V	11.00	EA	12.52	137.71
MPP	000609990	HOLDER, FLUORESCENT LAMP		20.00	EA	0.00	0.00
MPP	000610006	VALVE, PLUGAROO, 3" FLANGED, 175# RATED		0.00	EA	664.02	0.00
MPP	000610012	RING, SQUARE, END COVER	FOR GLEGG WATER TREATMENT & RO SYSTEM	27.00	EA	33.07	892.86
MPP	000610014	VALVE, DIAPHRAGM, 3/4", 150# FLANGED		1.00	EA	0.00	0.00
MPP	000610022	O-RING, TONKAFLOW PUMP		18.00	EA	4.19	75.38
MPP	000610030	O-RING, BUNA-N 367, 70 DUR, GLEGG SYSTEM		40.00	EA	0.00	0.00
MPP	000610808	O-RING	FOR H.P. FUEL PUMP - ROPER (C.T.)	10.00	EA	2.08	20.82
MPP	000610816	SEAL	MECHANICAL, H.P. FUEL PUMP - ROPER	7.00	EA	34.79	243.55
MPP	000610824	BEARING, BALL	H.P. FUEL PUMP - ROPER (C.T.)	2.00	EA	59.12	118.24
MPP	000610832	GASKET	H.P. FUEL PUMP - ROPER (C.T.)	9.00	EA	26.00	234.00
MPP	000610840	O-RING	H.P. FUEL PUMP - ROPER (C.T.)	18.00	EA	7.51	135.20
MPP	000610857	O-RING	H.P. FUEL PUMP - ROPER (C.T.)	9.00	EA	2.19	19.67
MPP	000610865	GASKET	H.P. FUEL PUMP - ROPER (C.T.)	12.00	EA	11.10	133.23
MPP	000610873	WEAR PLATE	H.P. FUEL PUMP - ROPER (C.T.)	4.00	EA	390.00	1,560.00
MPP	000610881	WEAR PLATE	H.P. FUEL PUMP - ROPER (C.T.)	4.00	EA	390.00	1,560.00
MPP	000610899	U-RING	H.P. FUEL PUMP - ROPER (C.T.)	8.00	EA	18.63	149.06
MPP	000610907	BEARING ASSEMBLY	H.P. FUEL PUMP - ROPER (C.T.)	4.00	EA	1,274.01	5,096.03
MPP	000611186	BOLT,	SOCKET HEAD	6.00	EA	5.64	33.85
MPP	000611194	SHELLS	WALNUT, 2ND SIEVE	59.00	BG	6.09	359.39
MPP	000611202	VALVE, PACKAGE, AUTOMATED	APOLLO VALVE, SPRING RTN ACTUATOR, LIMIT	0.00	EA	0.00	0.00
MPP	000611210	TEE, SW, ALLOY 20, 3/4" 3000#	GLEGG WATER TREATMENT	2.00	EA	0.00	0.00
MPP	000611632	CPU	DIRECT PLC, SERIES 1	1.00	EA	129.48	129.48
MPP	000611640	AC/DC INPUT	16PT 24VDC SINK SOURCE	2.00	EA	85.28	170.56
MPP	000611657	DC OUPUT	16PT 12-24VDC SOURCE (2 TERM)	2.00	EA	92.56	185.12
MPP	000611665	RELAY OUTPUT	8PT 10A/COMMON 12-28VDC /	4.00	EA	79.04	316.16
MPP	000611673	OUTPUT CARD	16PT 12-24VDC SINK (2 TERM) 0.1 A/PT	2.00	EA	92.56	185.12
MPP	000611681	9 SLOT BASE	DIRECT PLC, SERIES 1 (M-966)	1.00	EA	107.64	107.64

NOTE: SOH - Stock on Hand

Source: DARS 3342 Report (as of 5/31/07)

Maui Electric Company, Limited

MATERIALS PHYSICAL INVENTORY
MAALAEA POWER PLANT

WH	STOCK CODE	Item	Description	SOH	Unit	Price/ Unit	Total Cost/ Item
MPP	000611699	VALVE PACKAGE	AUTOMATED, W/1/2" APOLLO VALVE, #76-103-	1.00	EA	0.00	0.00
MPP	000611707	PROBE, N2 SPEED	PUNA CT-3 - CT 4 - CT -5	0.00	EA	0.00	0.00
MPP	000611715	ASSEMBLY, GLASS	INTER COOLING PIPING 009-142	9.00	EA	0.00	0.00
MPP	000611723	FLANGE	FUEL OIL HEADER 009-137	2.00	EA	0.00	0.00
MPP	000611731	CONNECTOR	FUEL INLET	2.00	EA	655.20	1,310.40
MPP	000611749	VALVE	SOLENOID-SILICA ANALYZER	3.00	EA	0.00	0.00
MPP	000611755	BUSHING, HEX, TYPE 304 S/S	SIZE: 3/4" X 1/4"	5.00	EA	0.00	0.00
MPP	000611756	SWITCH, PUSH BUTTON		2.00	EA	0.00	0.00
MPP	000611764	CAPSCREW, HEX HEAD, SIZE:1/2-20 X 1-1/4"		98.00	EA	0.00	0.00
MPP	000611770	ANALYZER, HONEYWELL CONDUCTIVITY	FOR GLEGG R.O. SYSTEM.	1.00	EA	968.69	968.69
MPP	000611772	KIT, FUEL OIL MANIFOLD A-99		2.00	EA	0.00	0.00
MPP	000611780	PLATE, ANCHOR	1/2" ITT VALVE, GLEGG RO	3.00	EA	0.00	0.00
MPP	000611798	ASSEMBLY, BLADE	SHUTTER	31.00	EA	408.55	12,665.02
MPP	000611806	ACTUATOR	DOUBLE, ACTING, SPRING TO CLOSE	2.00	EA	180.27	360.53
MPP	000611814	KIT, REPAIR, ACTUATOR	GLEGG RO VALVE	2.00	EA	0.00	0.00
MPP	000611822	VALVE, BUTTERFLY, SIZE: 2.5"	GLEGG RO VALVE	2.00	EA	0.00	0.00
MPP	000611830	VALVE, BUTTERFLY, SIZE: 3"	GLEGG RO VALVE	0.00	EA	0.00	0.00
MPP	000611848	ACTUATOR, DOUBLE ACTING	SPRING TO CLOSE	2.00	EA	0.00	0.00
MPP	000611855	KIT, REPAIR, ACTUATOR	GLEGG RO VALVE	2.00	EA	0.00	0.00
MPP	000611921	FUSE	ELECT. CONT. CABINET B3254-MU	1.00	EA	0.00	0.00
MPP	000611939	YOKE	SWITCH GEAR/ALLIS CHALMERS	2.00	EA	0.00	0.00
MPP	000611947	SWITCH	L/O TEMP - CONTROL C5516-MU	1.00	EA	0.00	0.00
MPP	000611954	BODY	SIGHT GLASS GAUGE VALVE C1805MU	1.00	EA	0.00	0.00
MPP	000611962	KIT, REPAIR	WATER/L.O./FUEL C-505	2.00	EA	0.00	0.00
MPP	000611970	KIT, GASKET	L.O. SCAVENGING & FUEL OIL PUMP A-99	4.00	EA	0.00	0.00
MPP	000611988	SET, GASKET	HEAD VIKING PUMP	2.00	EA	0.00	0.00
MPP	000611996	ASSEMBLY, HOSE	S/S BRAIDED, I/C SYSTEM	1.00	EA	0.00	0.00
MPP	000612002	JOINT COUPLING UNIT	FLEX PIPE, I/C SYSTEM	66.00	EA	68.72	4,535.61
MPP	000612010	GASKET	OVER-SPEED GOVERNOR 011-059	4.00	EA	0.00	0.00
MPP	000612028	GASKET	OVER-SPEED GOVERNOR 011-059	5.00	EA	0.00	0.00
MPP	000612036	O-RING	OVER-SPEED GOVERNOR 011-059	12.00	EA	0.00	0.00
MPP	000612044	COVER, TURBO FILTER		5.00	EA	45.23	226.14
MPP	000612564	EXPANSION JOINT	SGLE SPHERE 6X5 PROCO	1.00	EA	976.78	976.78
MPP	000612572	NUT, CONNECTING ROD 003-003		3.00	EA	0.00	0.00
MPP	000612580	INSULATOR, STANDOFF SWITCHGEAR		3.00	EA	0.00	0.00
MPP	000612598	SWITCH, CELL, GENERATOR BREAKER		2.00	EA	0.00	0.00
MPP	000612606	BEARING RACE	TIMKEN	4.00	EA	42.53	170.11
MPP	000612614	DIAPHRAGM	FISHER VALVE LSV 36-101	1.00	EA	0.00	0.00
MPP	000612622	SWITCH ASSEMBLY	MERCURY LIMIT, GENERATOR PARTS	0.00	EA	0.00	0.00
MPP	000612630	SWITCH ASSEMBLY	MERCURY LIMIT, GENERATOR PARTS	0.00	EA	0.00	0.00
MPP	000612648	VALVE, UNLOADER, QUINCY AIR COMP.		4.00	EA	38.64	154.57
MPP	000612655	CONTACTOR, A.C. NON-REVERSING, SIEMENS		0.00	EA	0.00	0.00
MPP	000612663	STAB ASSEMBLY, SWITCHGEAR		1.00	EA	0.00	0.00
MPP	000612671	SENSOR, TEMPERATURE, PT-100 LOPX710		1.00	EA	383.87	383.87
MPP	000612689	PROTECTOR, MOTOR CIRCUIT, 30 AMP MCC		1.00	EA	0.00	0.00
MPP	000612697	ACCESSORY KIT, PROTECTOR MCC		1.00	EA	0.00	0.00
MPP	000612705	TRANSMITTER, TEMP.	20-120F, 4-20MA	1.00	EA	270.82	270.82
MPP	000612713	TRANSMITTER, TEMP., 0-300F, 4-20MA, R.O.		0.00	EA	0.00	0.00
MPP	000613398	VALVE	NPT PLUG	8.00	EA	30.78	246.23
MPP	000613406	VALVE	NEEDLE	7.00	EA	24.59	172.16
MPP	000613414	VALVE	NPT NEEDLE	7.00	EA	23.97	167.79
MPP	000613422	VALVE	NPT NEEDLE	5.00	EA	73.74	368.68
MPP	000613430	VALVE	CHECK	2.00	EA	128.59	257.17
MPP	000613448	SWITCH	TEMPERATURE CONTROL	0.00	EA	0.00	0.00
MPP	000613455	BLOCK	FRICTION	6.00	EA	0.00	0.00
MPP	000613463	V-BELT	OIL MIST ELIMINATOR	6.00	EA	3.90	23.43
MPP	000613471	VALVE	FARRIS RELIEF W / "C"	2.00	EA	367.89	735.77
MPP	000613489	SOLENOID VALVE	3-WAY MAGNET STOP/START/E-STOP	1.00	EA	0.00	0.00
MPP	000613497	BRACKET	HINGE	11.00	EA	261.95	2,881.45
MPP	000613505	BRACKET	HINGE	2.00	EA	0.00	0.00
MPP	000613513	BRACKET	HINGE	2.00	EA	0.00	0.00
MPP	000613521	BUSHING	BUILDING VENT FAN 1-3/8"	1.00	EA	0.00	0.00
MPP	000613539	SHEAVE	BUILDING VENT FAN 2A6.5	1.00	EA	0.00	0.00
MPP	000613547	BEARING & SLEEVE	GOVERNOR LINKAGE	4.00	EA	13.64	54.57
MPP	000613554	VALVE, SOLENOID (AIR)	120V AC 60HZ 10.1 WATTS	1.00	EA	1,630.76	1,630.76

NOTE: SOH - Stock on Hand

Source: DARS 3342 Report (as of 5/31/07)

Maui Electric Company, Limited

MATERIALS PHYSICAL INVENTORY
MAALAEA POWER PLANT

WH	STOCK CODE	Item	Description	SOH	Unit	Price/ Unit	Total Cost/ Item
MPP	000613562	KIT	REPAIR / AIR DAMPER	3.00	EA	117.08	351.24
MPP	000613570	ANALYZER	CO - TECO MODEL 48C	0.00	EA	0.00	0.00
MPP	000613588	ANALYZER	C02	1.00	EA	0.00	0.00
MPP	000613596	ANALYZER	NOx - TECO MODEL 42C	0.00	EA	0.00	0.00
MPP	000613828	AIR COOLER	DWG. #4A57-1-1-2K	0.00	EA	56,137.03	0.00
MPP	000613836	AIR COOLER	DWG. #S4926-1091-2	0.00	EA	66,318.67	0.00
MPP	000613844	GAUGES, WIKA	LIQUID FILLED.	6.00	EA	40.52	243.09
MPP	000613847	GAUGE, WIKA	300HG - 30 PSI	7.00	EA	33.79	236.50
MPP	000613851	GAUGES, WIKA	LIQUID FILLED.	9.00	EA	85.57	770.14
MPP	000614255	LAMP, SYVANIA 64490-0 METALARC, CLEAR	SIZE: 400W	9.00	EA	23.16	208.42
MPP	000614256	LAMP, SYLVANIA 90PAR/CAP/FL, HALOGEN		8.00	EA	5.25	42.03
MPP	000614257	LAMP, ARC, CLEAR, SIZE: 175W	SYLVANIA #64471-1	4.00	EA	23.37	93.47
MPP	000614258	LAMP, SYLVANIA, 67514-3, BALLAST S54		21.00	EA	11.10	233.20
MPP	000614259	LAMP, SYLVANIA 67578-1 LUMALUX	HIGH PRESS. SODIUM BALLAST S50	12.00	EA	11.10	133.25
MPP	000614260	LAMP, SYLVANIA 67523-2 LUMALUX	BALLAST S51	10.00	EA	21.57	215.72
MPP	000614261	LAMP, SYLVANIA 67508-1	HIGH PRESS. SODIUM, 150W	24.00	EA	11.24	269.84
MPP	000614262	LAMP, MINIATURE, GE		100.00	EA	0.00	0.00
MPP	000614263	LAMP, SYLVANIA 67516-3, LUMALUX, CLEAR	SIZE: 150W	49.00	EA	11.35	556.22
MPP	000614264	LAMP, METAL HALIDE, SYLVANIA 64457-0	METALARC M/MS	21.00	EA	23.34	490.19
MPP	000614265	LAMP, SYLVANIA	250 W, MERCURY	5.00	EA	43.84	219.21
MPP	000614266	LAMP, EMD 1-3 BREAK IN & OUT & UNIT	NOT AVAILABLBE LIGHT, M14-16 BREAKER IND	160.00	EA	0.00	0.00
MPP	000614267	LAMP, UNITS 1 - 9 ANNUNCIATOR	"ON" LIGHT	20.00	EA	0.00	0.00
MPP	000614268	LAMP, CAND. CLEAR INDICATOR	3W, 120V	120.00	EA	0.00	0.00
MPP	000614269	LAMP, 145V, UNIT 4 - 9 ECP AUXILIARY	LIGHTS & HOUSE MAKEUP TANK X1, X2	36.00	EA	3.11	112.11
MPP	000614270	LAMP, 130V, INDICATOR, GROUND FAULT		40.00	EA	0.00	0.00
MPP	000614271	LAMP, 120V, AIR COMPRESSOR COOLING SYS.	CONTROL PANEL. COMBINE TURBINE UNIT &	40.00	EA	0.65	26.00
MPP	000614272	LAMP, MINIATURE, 24V, SUNRAY		80.00	EA	0.00	0.00
MPP	000614273	LAMP, MINIATURE, SUNRAY SR28V-C		40.00	EA	0.56	22.29
MPP	000614274	LAMP, BORESCOPE, 15V, 150W		10.00	EA	0.00	0.00
MPP	000614275	LAMP, SYLVANIA 14500-0, 50W BOILER	SIGHT GLASS CT UNIT	24.00	EA	7.62	182.89
MPP	000614276	LAMP	TIME CLOCK	90.00	EA	0.43	38.77
MPP	000614277	LAMP, MINIATURE, SUNRAY		50.00	EA	1.34	67.01
MPP	000614278	LAMP, INTEGRATOR LIGHTS UNITS 8 & 9	ECP AUXILIARY	50.00	EA	1.67	83.33
MPP	000614279	LAMP, ECP ANNUNCIATOR ALARM PANEL	UNITS 4 - 9	40.00	EA	0.00	0.00
MPP	000614280	LAMP, MAIN BREAKER - CONTROL PANELS		40.00	EA	0.96	38.54
MPP	000614281	LAMP, BUILDING FAN LIGHTS		60.00	EA	0.55	33.11
MPP	000614282	LAMP, PHILLIPS, 27569	100A/RS/VS/BR	5.00	EA	2.86	14.32
MPP	000614283	LAMP, AUX. CONTROL PANEL/BOILER	SAMPLING PUMP & BLACKSTART INDICATOR	80.00	EA	0.56	44.64
MPP	000614284	LAMP, EMD 1 - 3 UNITS FAULT LIGHT		60.00	EA	0.00	0.00
MPP	000614285	LAMP, MINIATURE, SYLVANIA		16.00	EA	5.98	95.63
MPP	000614286	LAMP, MINIATURE, GE		10.00	EA	0.00	0.00
MPP	000614287	LAMP, WOODWARD DIGITAL CONTROL PANEL	CT UNIT	40.00	EA	0.52	20.83
MPP	000614288	LAMP, OILY WATER WASTE SEPARATOR/CT FO	PURIFIER PANEL	40.00	EA	5.49	219.57
MPP	000614289	LAMP, MINIATURE, SYLVANIA		20.00	EA	0.00	0.00
MPP	000614290	LAMP, TEMPERATURE CONTROL UNIT PANEL	(OUTSIDE)/HYDRAULIC STARTER PANEL	20.00	EA	0.00	0.00
MPP	000614291	LAMP, MINIATURE, SYLVANIA		50.00	EA	0.00	0.00
MPP	000614292	LAMP, MINIATURE, SUNRAY		50.00	EA	1.00	49.75
MPP	000614293	LAMP, M 1-3 METAL DETECTOR/OILY	WASTE WATER SEPARATOR.	49.00	EA	0.57	27.80
MPP	000614294	LAMP, AUX. CONTROL PANEL ECP BREAKER	SWITCH INDICATOR M4-9 & GEN. ALL CT'S	70.00	EA	2.39	166.97
MPP	000614295	LAMP, KEYBOARD IHI		40.00	EA	0.79	31.56
MPP	000614296	LAMP, CADELIABRA SCREW, 120V, 3W,	REVERSE OSMOSIS ROOM, PHILLIPS	50.00	EA	1.66	83.07
MPP	000614297	LAMP, AIR COMP. PANEL, REVERSE OSMOSIS		40.00	EA	0.65	25.96
MPP	000614298	LAMP, AIR DRYERS INDICATOR	ALL CT UNITS.	16.00	EA	1.40	22.37
MPP	000614299	LAMP, MINIATURE	CT UNITS	40.00	EA	1.39	55.41
MPP	000614300	LAMP, LUBE OIL PURIFIER, M15 UNIT		25.00	EA	3.55	88.75
MPP	000614301	LAMP	MINI	70.00	EA	1.36	94.96
MPP	000614302	LAMP, ABB STEAM TURBINE PANEL M15 UNIT		30.00	EA	2.00	59.88

NOTE: SOH - Stock on Hand

Source: DARS 3342 Report (as of 5/31/07)

Maui Electric Company, Limited

MATERIALS PHYSICAL INVENTORY
MAALAEA POWER PLANT

WH	STOCK CODE	Item	Description	SOH	Unit	Price/ Unit	Total Cost/ Item
MPP	000614303	LAMP, CANDELABRA, SCREW, SIZE: 6W-120V	FOR MITSUBISHI SYNCHRONIZER.	18.00	EA	0.00	0.00
MPP	000614354	MOTOR, EPTC BALDOR	480V; 3PH; 30 HP; 1770 RPM	1.00	EA	2,322.31	2,322.31
MPP	000614362	MOTOR, TEFC BALDOR	SUPER E PREMIUM EFFICIENT	1.00	EA	2,258.05	2,258.05
MPP	000614388	KIT, SAMPLE	PRESSURE CONDITIONING	2.00	EA	265.61	531.22
MPP	000614396	DIAPHRAGM	1.5" REPLACEMENT	6.00	EA	40.26	241.55
MPP	000614397	DIAPHRAGM	2" EPDM REPLACEMENT	3.00	EA	54.70	164.11
MPP	000614398	PIPE JOINT, L-TYPE	DWG.# D501821 & D501594 810B	1.00	EA	71.87	71.87
MPP	000614520	KIT, REBUILD SOLENOID	K-3 BURNER IGNITOR	3.00	EA	114.73	344.20
MPP	000614693	UNLOADER VALVE	AIR COMPRESSOR MODEL #9X7ESV-1-NC-2-A/E.	0.00	EA	845.38	0.00
MPP	000614720	BOARD, DISCRETE OUTPUT	ITEM 1-4-5	1.00	EA	0.00	0.00
MPP	000614721	RELAY	VOLTAGE SENSOR ITEM 1-5-7	2.00	EA	0.00	0.00
MPP	000614728	BOARD, DISCRETE VOTING	ITEM NO. 1-2-6	1.00	EA	0.00	0.00
MPP	000614729	MODULE, ANALOG OUTPUT	ITEM NO. 1-2-2	1.00	EA	0.00	0.00
MPP	000614730	MODULE, SERVO AMP.	ITEM NO. 1-1-1	1.00	EA	0.00	0.00
MPP	000614731	MODULE, E-BUS, DIGITAL VME	ITEM NO. 1-2-3	1.00	EA	0.00	0.00
MPP	000614732	MODULE, CPU, DIGITAL VME-CPU	ITEM NO. 1-2-1	1.00	EA	0.00	0.00
MPP	000614733	VALVE, 4 FUNCTION, COMPLETE	CT REVERSE OSMOSIS - GLEGG WATER	3.00	EA	55.65	166.94
MPP	000614734	MAGNETROL SOLENOID VALVE, 1-1/2"	120 VAC 115 psi 23 WATTS	2.00	EA	514.54	1,029.08
MPP	000614735	TRANSMITTER, BAILEY	FOR INSTRUMENT AIR SYSTEM	0.00	EA	947.75	0.00
MPP	000614736	VALVE, BRASS FLOAT, SIZE: 1/2" NPT	0.840" PIPE OD; 26.0 GPM; 125 PSI	2.00	EA	16.68	33.36
MPP	000614737	VALVE, BRASS FLOAT, SIZE: 1" NPT	1.315" PIPE OD; 72.8 GPM;	5.00	EA	36.59	182.95
MPP	000614738	VALVE ASSY., BRASS LEVER-ARM FLOAT	3/4" NPT MALE INLET X NPT MALE OUTLET	3.00	EA	39.67	119.00
MPP	000614739	RELAY	VOLTAGE SENSOR ITEM 1-5-8	1.00	EA	0.00	0.00
MPP	000614740	RELAY	ITEM 1-5-9	2.00	EA	0.00	0.00
MPP	000614741	FUSE	ITEM 1-5-12 & 2-8-21 0.3A	30.00	EA	14.86	445.71
MPP	000614742	FUSE	ITEM 1-5-13 (0.5A)	20.00	EA	5.20	104.00
MPP	000614743	FUSE	ITEM 1-5-14 1.0A	20.00	EA	14.86	297.14
MPP	000614744	FUSE	1.5A ITEM 1-5-15	10.00	EA	14.86	148.57
MPP	000614745	VALVE, LUBE OIL COOLER INLET	ITEM NO. 2-1-3	2.00	EA	1,017.00	2,033.99
MPP	000614746	FUSE	ITEM 1-5-16 2.0A	5.00	EA	14.86	74.29
MPP	000614747	VALVE, SOLENOID	FOR #1 GENERATOR L/O COOLER INLET VALVE	1.00	EA	0.00	0.00
MPP	000614748	VALVE, PRESSURE REGULATING	ITEM NO. 2-1-5	1.00	EA	0.00	0.00
MPP	000614749	FILTER, SUCTION	FOR #1 GENERATOR L/O PUMP	1.00	EA	0.00	0.00
MPP	000614750	VALVE, INLET	ITEM NO. 2-2-4	1.00	EA	0.00	0.00
MPP	000614751	SWITCH, LIMIT	FOR #1 GENERATOR L/O COOLER INLET VALVE	0.00	EA	0.00	0.00
MPP	000614752	VALVE, SOLENOID	FOR #1 GENERATOR L/O COOLER INLET VALVE	0.00	EA	0.00	0.00
MPP	000614753	FILTER	FOR #1 FUEL PUMP SUCTION	1.00	EA	0.00	0.00
MPP	000614754	VALVE, SOLENOID	FOR #1 FUEL SHUTOFF VALVE	1.00	EA	0.00	0.00
MPP	000614755	BOX, HEATER CONTROL	ITEM NO. 2-4-2	1.00	EA	0.00	0.00
MPP	000614756	BREATHER, CONTROL OIL TANK AIR	ITEM NO. 2-5-1	1.00	EA	0.00	0.00
MPP	000614757	ACCUMULATOR, CONTROL OIL	ITEM NO. 2-5-2	1.00	EA	0.00	0.00
MPP	000614758	INDICATOR, CONTROL OIL TANK LEVEL	ITEM NO. 2-5-3	1.00	EA	0.00	0.00
MPP	000614759	INDICATOR, TEMPERATURE, HYDRAULIC	STARTING OIL ITEM NO. 2-6-3	1.00	EA	0.00	0.00
MPP	000614760	INDICATOR, PRESSURE, CLUTCH COOLING	HYDR. STARTING SYS. ITEM 2-6-6	1.00	EA	0.00	0.00
MPP	000614761	GASKET	ITEM #2-7-1	1.00	EA	0.00	0.00
MPP	000614762	O-RING	ITEM 2-7-2	1.00	EA	0.00	0.00
MPP	000614763	O-RING	ITEM NO. 2-7-3	2.00	EA	0.00	0.00
MPP	000614764	O-RING	ITEM #2-7-4	1.00	EA	0.00	0.00
MPP	000614765	O-RING	ITEM 2-7-5 DWG. TSO-35502	6.00	EA	0.00	0.00
MPP	000614766	BOARD, ANNUNCIATOR	ITEM NO. 1-4-6	1.00	EA	0.00	0.00
MPP	000614767	BUTTON, PUSH	ITEM 1-5-6	2.00	EA	0.00	0.00
MPP	000614768	SWITCH, LIMIT	HYDRAULIC STARTING PUMP SUCTION VALVE	1.00	EA	0.00	0.00
MPP	000614769	GASKET, SPIRAL WOUND, FLEXITALIC	SIZE: 1-1/4, 304 GRAFOIL	20.00	EA	1.79	35.85
MPP	000614784	PEN, DISPOSABLE, RED INK	MODEL NO. S/N93190009-10, KAHULUI 1 & 2.	8.00	PK	10.39	83.12
MPP	000614982	GASKET, SPIRAL WOUND, FLEXITALIC	304 GRAFOIL	2.00	EA	0.00	0.00
MPP	000614983	RING, LANTERN, (SIHI PUMP)	FOR M15 CONDENSER AIR VACUUM PUMP	2.00	EA	0.00	0.00
MPP	000614984	RING	OIL RETAINING	1.00	EA	3,401.00	3,401.00
MPP	000614985	INDICATOR, PRESSURE, HYDR. STARTING PUMP	OIL, 19TH-PI-23 DWG. GTHA11654REV.A	1.00	EA	0.00	0.00
MPP	000614986	SWITCH, LIMIT	FOR #1 GEN L/O COOLER INLET VALVE	1.00	EA	0.00	0.00

NOTE: SOH - Stock on Hand

Source: DARS 3342 Report (as of 5/31/07)

Maui Electric Company, Limited

MATERIALS PHYSICAL INVENTORY
MAALAEA POWER PLANT

WH	STOCK CODE	Item	Description	SOH	Unit	Price/ Unit	Total Cost/ Item
MPP	000614987	MODULE, OPTICAL/ELECTRICAL INTERFACE	IFP100 ITEM 1-4-1	0.00	EA	0.00	0.00
MPP	000614988	PUMP, HYDRAULIC	MODIFIED TO INCLUDE: CHARGE PUMP WITH	0.00	EA	0.00	0.00
MPP	000614989	VALVE, PRESSURE, REGULATING, ITEM 2-4-5	FOR AIR ACTUATOR VALVE	1.00	EA	0.00	0.00
MPP	000614995	INDICATOR, PRESSURE, CONTROL OIL	19TH-PI-23 ITEM (2-6-5) 0 - 1000 PSI	1.00	EA	0.00	0.00
MPP	000614996	DESKTOP SUBSET	MULTI-PARTY, W/15' HANDSET CORD	2.00	ST	492.00	984.01
MPP	000614997	AMPLIFIER, DESK TOP SUB SET	FOR GAITRONICS	2.00	EA	281.74	563.47
MPP	000615106	GLASS, GAGE, 3/4" DIAMETER, 4' LONG	RED LINE, MODELINE, HEAVY DUTY WALL	12.00	EA	59.69	716.24
MPP	000615120	METER, FLOW, .5-12 GPH	FOR CT RO	8.00	EA	58.54	468.30
MPP	000615121	VALVE, CHECK, SWAGELOK, SIZE: 1/4" LIFT	FOR CT RO.	9.00	EA	65.62	590.58
MPP	000615122	PIN, ANTI-CLOCKING	FOR LM2500 TURBINE MIDFRAME.	14.00	EA	351.24	4,917.41
MPP	000615123	SENSOR, FLAME, ULTRA-VIOLET	FOR HONEYWELL FLAME MONITOR, DETECTOR,	1.00	EA	9,534.20	9,534.20
MPP	000615124	AMPLIFIER, FLAME, ULTRA-VIOLET	FOR FLAME MONITOR DETECTOR, MODEL	1.00	EA	4,791.80	4,791.80
MPP	000615125	GASKET, SIGHT GLASS, SERIES P-2000	NOX WATER PUMP.	27.00	EA	0.00	0.00
MPP	000615126	UNLOADER, COMPLETE VALVE	FOR INGERSOL RAND AIR COMPRESSOR "A"	2.00	EA	968.24	1,936.48
MPP	000615161	PROBE, THERMOCOUPLE	ALSTOM STEAM TURBINE	1.00	EA	989.52	989.52
MPP	000615162	PROBE, RTD	ALSTOM STEAM TURBINE	2.00	EA	1,014.00	2,028.00
MPP	000615163	PROBE, RTD	ALSTOM STEAM TURBINE	3.00	EA	957.57	2,872.71
MPP	000615179	ASSEMBLY, GAUGE CHECK - ITEM 14 - VAREC	F.O. TANK LEVEL INDICATOR	1.00	EA	57.00	57.00
MPP	000615180	SPRING, GAUGE CHECK - ITEM 15 - VAREC	F.O. TANK LEVEL INDICATOR	3.00	EA	9.00	27.00
MPP	000615187	GAUGE, PRESSURE, 0-160 PSI	TYPE 232.34, 4-1/2" FACE, LOWER MOUNT	15.00	EA	67.96	1,019.46
MPP	000615188	GAUGE, PRESSURE, 700 BAR, 10,000 PSI	TYPE 232.50, 6" FACE, 316SS TUBE &	2.00	EA	293.28	586.55
MPP	000615195	KIT, FLEX PIPE COUPLING & GASKET,	SIZE 2"	4.00	KT	107.63	430.53
MPP	000615203	COIL, TRIP, 125VDC	GENERATOR BREAKER	2.00	EA	0.00	0.00
MPP	000615204	COIL, CLOSING, 125VDC	GENERATOR BREAKER	2.00	EA	0.00	0.00
MPP	000615229	SWITCH, TEMPERATURE, GT L/O TANK	24VDC SETTING: 150 DEG.F (INCREASING)	1.00	EA	0.00	0.00
MPP	000615237	INDICATOR, HEAD TANK LEVEL	FOR GENERATOR LUBE OIL SYSTEM	1.00	EA	0.00	0.00
MPP	000615245	HEATER, RINSE WATER TANK	460V, 3PH, 24KW, 45 W/IN2	1.00	EA	0.00	0.00
MPP	000615252	SWITCH, SOLUTION WATER TANK LEVEL, 24VDC	FOR WATER WASH SYSTEM	1.00	EA	0.00	0.00
MPP	000615260	SWITCH, RINSE WATER TANK LEVEL, 24VDC	FOR WATER WASH SYSTEM	1.00	EA	0.00	0.00
MPP	000615278	SWITCH, ETHERNET	FOR CONTROLS SYSTEM	1.00	EA	0.00	0.00
MPP	000615286	SWITCH, ETHERNET	FOR CONTROLS SYSTEM	1.00	EA	0.00	0.00
MPP	000615294	BOARD, GATEWAY	FOR CONTROLS SYSTEM	1.00	EA	0.00	0.00
MPP	000615302	LAN-CARD	FOR CONTROLS SYSTEM ITEM 1-3-4	1.00	EA	0.00	0.00
MPP	000615310	DIAPHRAGM, BUNA N (BN63)	FOR WILDEN PUMP, MODEL M4/BT	10.00	EA	31.80	317.95
MPP	000615311	VALVE SEAT, BUNA (BN70)	FOR WILDEN PUMP, MODEL M4/BT	10.00	EA	7.63	76.31
MPP	000615312	VALVE, BALL	FOR WILDEN PUMP, MODEL M4/BT	24.00	EA	6.22	149.22
MPP	000615313	GASKET, AIR VALVE, BUNA	FOR WILDEN PUMP, MODEL M4/BT	7.00	EA	0.81	5.65
MPP	000615314	GASKET, PLT, MUFFLER, BUNA	FOR WILDEN PUMP, MODEL M4-BT	4.00	EA	1.16	4.63
MPP	000615315	SHAFT	FOR WILDEN PUMP, MODEL M4/BT	2.00	EA	0.00	0.00
MPP	000615316	O-RING	FOR WILDEN PUMP, MODEL M4/BT	20.00	EA	0.77	15.47
MPP	*000615317*	*BREAKER, EARTH LEAKAGE*	*FOR CONTROL SYSTEM*	*1.00*	*EA*	*0.00*	*0.00*
MPP	000615328	HUB ASSY, ES-4, FLEX COUPLING	SIZE: 1.625 & 1.125	4.00	ST	0.00	0.00
MPP	000615329	SPACER, REXNORD OMEGA WITH ACCESS-ES-4	FOR DEMIN. TRANSFER PUMP.	2.00	EA	94.80	189.60
MPP	000615369	MODULE, V-BUS, CSI766A, DIGITAL MODULE	FOR CSI 7500 CONTROL SYSTEM,	1.00	EA	0.00	0.00
MPP	000615377	BOARD, OUTPUT, ANALOG, AO6000A	CSI-7500 CONTROL SYSTEM, REMOTE I/O	1.00	EA	0.00	0.00
MPP	000615385	BOARD, INPUT, DISCRETE	REF. DI6000, REMOTE I/O MODULE	1.00	EA	0.00	0.00
MPP	000615393	BOARD, INPUT, ANALOG, AI6000B,	CSI 7500 CONTROL SYSTEM REMOTE I/0	1.00	EA	0.00	0.00
MPP	000615401	BOARD, R-BUS	R-BUS7520 DIGITAL MODULE CSI-7500	1.00	EA	0.00	0.00
MPP	000615419	VALVE, INLET, RINSE WATER TANK	1" ANSI 150# RF, SPRING RETURN	1.00	EA	0.00	0.00
MPP	000615526	BALLAST, FLUORESCENT LIGHT	FOR SINGLE PIN T12 LAMP FIXTURE	0.00	EA	12.81	0.00
MPP	000615527	SWITCH, DIFFERENTIAL PRESSURE INDICATING	FOR CT UNITS	6.00	EA	292.34	1,754.06
MPP	000615528	ROD, LINK	FOR FUEL CONTROL LINKAGE - 011	1.00	EA	682.25	682.25
MPP	000615529	O-RING, METRIC, BUNA 70	FOR PALL DUPLEX FILTER, L.O., MODEL 8640	4.00	EA	0.00	0.00
MPP	000615530	WASHER, LOCK, SIZE: 3/4"	CONNECTING ROD LSVB4-1	40.00	EA	0.68	27.04
MPP	000615531	ELEMENT, FLEX, SPIDER	FOR GENERATOR LUBE OIL PUMP	3.00	EA	28.82	86.45
MPP	000615532	FLANGE, LOVEJOY COUPLING, SIZE: 7SC	FOR GENERATOR LLUBE OIL PUMP	2.00	EA	34.38	68.75
MPP	000615533	FLANGE, LOVEJOY COUPLING, SIZE: 7SC	FOR GENERATOR LLUBE OIL PUMP	2.00	EA	46.87	93.74
MPP	000615534	COUPLING, LOVEJOY , SIZE: 7SCH	FOR GENERATOR LUBE OIL PUMP	3.00	EA	22.22	66.66
MPP	000615535	COUPLING, LOVEJOY, SIZE: 7SCH	FOR GENERATOR LUBE OIL PUMP	3.00	EA	20.83	62.50

NOTE: SOH - Stock on Hand

Source: DARS 3342 Report (as of 5/31/07)

Maui Electric Company, Limited

MATERIALS PHYSICAL INVENTORY
MAALAEA POWER PLANT

WH	STOCK CODE	Item	Description	SOH	Unit	Price/ Unit	Total Cost/ Item
MPP	000615542	BALLAST, METAL HALIDE, SIZE: 175 WATT	MAALAEA UNITS	8.00	EA	49.81	398.46
MPP	000615543	GASKET, SPIRAL WOUND, 304 GRAFOIL	SIZE: 2-1/2"300/400/600	23.00	EA	3.63	83.53
MPP	000615544	PUMP, LUBE OIL, COMPLETE WITH RELIEF	VALVE, 008-160.	1.00	EA	57,240.56	57,240.56
MPP	000615559	INDICATOR, LEVEL, HYDRAULIC STARTING OIL	TANK. OAL: 45-1/4"	1.00	EA	0.00	0.00
MPP	000615567	INDICATOR, GT L/O TANK LEVEL	1", 150# RF, 29" CENTER TO CENTER	1.00	EA	0.00	0.00
MPP	000615583	KIT, GASKET, FRAME BEARING	FOR TURBINE DRAIN TANK PUMP	2.00	KT	0.00	0.00
MPP	000615584	KIT, GASKET, PUMP	FOR TURBINE DRAIN TANK PUMP	3.00	KT	0.00	0.00
MPP	000615625	PUMP, VIKING HD FOOT MOUNTED, 1-1/2"	PORTS, STD. CONSTR. VITON MECH. SEAL	3.00	EA	1,003.06	3,009.18
MPP	000615633	SWITCH, PRESSURE - STATIC-O-RING	SP @ 996 PSI FALLING	3.00	EA	304.62	913.87
MPP	000615740	KIT, VALVE REPAIR	FOR 9150-31-2236 MTT1 3" MBV BALL VALVE	1.00	EA	174.99	174.99
MPP	000615741	SWITCH, LIMIT	ADJ. LENGTH ROLLER LEVER	4.00	EA	86.75	346.99
MPP	000615742	VALVE, 3" MBV BALL, BODY STL, SEAT NTFE	ANSI B16.34, FORGED VALVE FLANGED	1.00	EA	967.65	967.65
MPP	000615831	PREFILTER, HIGH CAPACITY PLEAT	SIZE: 24" X 12" X 4" (12 per box)	8.00	BX	167.53	1,340.22
MPP	000615832	PREFILTER, HIGH CAPACITY PLEAT	SIZE: 24" X 24" X 4" (6 per box)	38.00	BX	118.00	4,483.94
MPP	000615849	GASKET	FOR TRANSFER GEAR BOX ASSEMBLY	20.00	EA	9.36	187.20
MPP	000615850	PACKING, PREFORMED (O-RING)	SIZE: 8.957 ID	10.00	EA	4.99	49.92
MPP	000615855	ASSEMBLY, ACTUATOR - METRON CV98	FOR FIRE SUPPRESSION SYSTEM	2.00	EA	0.00	0.00
MPP	000615856	ASSEMBLY, PROTRACTOR CARTRIDGE - METRON	FOR FIRE SUPPRESSION SYSTEM	2.00	EA	0.00	0.00
MPP	000615864	DISC, PRESSURE, VALVE GEAR	DWG. #B1111100-0023K, ITEM 29	11.00	EA	0.00	0.00
MPP	000615872	TRANSMITTER, PRESSURE, 0-4000 PSI	4-20 MA OUTPUT, 24VDC SUPPLY	1.00	EA	1,192.63	1,192.63
MPP	000615898	BALL	FOR ALFALAVAL F.O. PURIFIER, MAB-2063-24	12.00	EA	2.23	26.70
MPP	000615899	O-RING	FOR ALFALAVAL F.O. PURIFIER MAB-206S-24A	13.00	EA	0.74	9.57
MPP	000615900	O-RING	FOR ALFALAVAL F.O. PURIFIER MAB206S-24	7.00	EA	6.75	47.25
MPP	000615906	BOARD, CIRCUIT	FOR CYBEREX INVERTER, MODEL 37.5/1BF1M,	1.00	EA	439.92	439.92
MPP	000615907	CAPACITOR, 9400 MF	FOR CYBEREX INVERTER, MODEL 37.5/1BF1M,	1.00	EA	0.00	0.00
MPP	000615908	SCR (SILICON CONTROLLED RECTIFIER)	FOR CYBEREX INVERTER, MODEL 37.5/1BF1M,	1.00	EA	0.00	0.00
MPP	000615909	SCR (SILICON CONTROLLED RECTIFIER)	FOR CYBEREX INVERTER, MODEL 37.5/1BF1M,	1.00	EA	0.00	0.00
MPP	000615922	PUMP, SUMP	5.8 AMPS, 1.5 HP, 230/2460 VOLTS, 3 PH,	1.00	EA	1,601.98	1,601.98
MPP	000615930	KIT, SEAL OVERHAUL, TAIL BUSHING GBX LIP	SUNFLO P2000 PUMP	3.00	KT	672.06	2,016.18
MPP	000615948	KIT, O-RING REPAIR, SINGLE SEAL	SUNFLO P2000 PUMP	3.00	KT	44.19	132.57
MPP	000616003	MOTOR, 1 HP, 3 PHASE, 220/440V, 1745	RPM, 143T FRAME, 1.25 SF	1.00	EA	0.00	0.00
MPP	000616011	THERMOCOUPLE, T5.4 PROBE	WESTON / AMETEK	13.00	EA	1,656.23	21,530.93
MPP	000616029	ASSEMBLY, AIR SYSTEM EJECTOR (NOZZLE)	FIG. 105	2.00	EA	3,853.20	7,706.40
MPP	000616037	ELEMENT, OMEGA COUPLING	MAALAEA 14, 16, 17 & 19	9.00	EA	64.90	584.11
MPP	000616045	CAP, END, WITHOUT GUIDE	FOR WILDEN PUMP	5.00	EA	5.45	27.25
MPP	000616052	RING, RETAINING AIR VALVE	FOR WILDEN PUMP	2.00	EA	0.00	0.00
MPP	000616060	CAP, END, WITH GUIDE	WILDEN PUMP	2.00	EA	6.18	12.36
MPP	000616078	O-RING, FOR END CAP (CAP CODE 616060)	WILDEN PUMP	8.00	EA	0.84	6.70
MPP	000616086	CLAMP, V-TYPE, METAL, DWG #D532007K		2.00	EA	354.15	708.30
MPP	000616094	BOLT, HEX SOCKET HEAD, FOR SUPPORT RING,	DWG #D501125K	36.00	EA	76.96	2,770.56
MPP	000616102	JOINT, EXPANSION BRANCH. FOR EXHAUST	MANIFOLD, DWG #D532007K	5.00	EA	1,330.65	6,653.23
MPP	000616136	TRIP, SHUNT, 125VDC, 1600AMP, MODEL MBE	MAALAEA UNITS 14 - 16	2.00	EA	323.94	647.88
MPP	000616144	DEVICE, CONTROL, 125VAC, 1600AMP, MODEL	MBE	2.00	EA	910.73	1,821.45
MPP	000616151	TRANSMITTER, PRESSURE, FOR F.O. FLOW	METER 0-1000 IN.	3.00	EA	2,537.34	7,612.02
MPP	000616326	COIL, TRIP, 15KV, ADVAC MODEL #	AA242777XXOOOOP	5.00	EA	366.64	1,833.22
MPP	000616334	COIL, CLOSING, 15KV, ADVAC MODEL #	AA242777XXOOOOP	2.00	EA	299.98	599.96
MPP	000616342	VALVE, 4" MBV BALL BODY STL, SEAT NTFE,	FORGED VALVE FLANGED, NELES-JAMESBURY	1.00	EA	1,679.89	1,679.89
MPP	000616359	KIT, VALVE REPAIR. FOR 4" MBV BALL VALVE	MODEL #4-9150-31-2236, NELES-JAMESBURY	1.00	EA	303.32	303.32
MPP	000616375	COIL, TRIP. FOR ABB 15KV BREAKER MODEL	#C215210106	2.00	EA	404.92	809.84

NOTE: SOH - Stock on Hand

Source: DARS 3342 Report (as of 5/31/07)

Maui Electric Company, Limited

MATERIALS PHYSICAL INVENTORY
MAALAEA POWER PLANT

WH	STOCK CODE	Item	Description	SOH	Unit	Price/ Unit	Total Cost/ Item
MPP	000616383	PACKING, #24, FOR TEMPERATURE CONTROL	VALVE, DP11803	6.00	EA	0.00	0.00
MPP	000616391	ORING. FOR TEMPERATURE CONTROL VALVE,	DP-11803.	6.00	EA	0.00	0.00
MPP	000616409	PACKING. FOR TEMPERATURE CONTROL VALVE	DP11803	5.00	EA	0.00	0.00
MPP	000616417	SCREW, SET. FOR AIR START VALVE		6.00	EA	0.00	0.00
MPP	000616425	ORING. FOR TEMPERATURE CONTROL VALVE	DP-11803	6.00	EA	0.00	0.00
MPP	000616433	GEAR, CAMSHAFT, NON-SHIFTING		0.00	EA	4,149.60	0.00
MPP	000616441	GASKET, FIRE, .175 - .184 THICK,	FLEXITALLIC CYLINDER LINER	6.00	EA	26.21	157.25
MPP	000616442	GASKET, INNER WATER, .175-1.84 THICK,	FLEXITALLIC CYLINDER LINER	3.00	EA	82.53	247.58
MPP	000616443	GASKET, OUTER WATER, .174-.184 THICK,	FLEXITALLIC CYLINDER LINER	15.00	EA	123.03	1,845.41
MPP	000616458	SPRING, FOR #1 PURIFIER - CT FUEL OIL		1.00	EA	0.00	0.00
MPP	000616459	CONE, VALVE, FOR #1 PURIFIER-CT FUEL OIL		1.00	EA	72.02	72.02
MPP	000616460	GUIDE, POLE, FOR #1 PURIFIER-CT FUEL OIL		1.00	EA	0.00	0.00
MPP	000616474	PACKING, #15, FOR TEMPERATURE CONTROL	VALVE, DP11803	6.00	EA	0.00	0.00
MPP	000616680	VALVE, SOLENOID, 115VAC. 1/2"	FOR CT F.O. DRAIN SYSTEM	2.00	EA	1,127.64	2,255.27
MPP	000617043	ASSEMBLY, GEAR, SPRING DRIVE - CAMSHAFT	DRIVE GEAR TRAIN - B26	0.00	EA	2,614.07	0.00
MPP	000617068	PUMP, WATER, FUEL VALVE COOLING,	DWG #535195	1.00	EA	11,221.16	11,221.16
MPP	000617142	BAR, ADJUSTING - FUEL INJECTING PUMP	ADJUSTING, D501298,9K	2.00	EA	120.30	240.61
MPP	000617159	PLATE, CENTER. FUEL INJECTION PUMP	ADJUSTING - D501298, 9K	1.00	EA	0.00	0.00
MPP	000617167	WASHER. FOR FUEL INJECTION PUMP	ADJUSTING, D501298, 9K	1.00	EA	7.28	7.28
MPP	000617175	PIECE, SPACER - FUEL INJECTION PUMP	ADJUSTING, D501298, 9K	1.00	EA	0.00	0.00
MPP	000617183	WASHER, FUEL INJECTION PUMP ADJUSTING		1.00	EA	0.00	0.00
MPP	000617191	NUT, CROWN - FUEL INJECTION PUMP	ADJUSTING D501298, 9K	1.00	EA	0.00	0.00
MPP	000617209	BOLT, HEX SOCKET, HEADLESS, FUEL	INJECTION PUMP ADJUSTING, D501298, 9K	2.00	EA	0.00	0.00
MPP	000617217	WASHER, LOCK, TOOTHED, FUEL INJECTION	PUMP ADJUSTING	1.00	EA	0.00	0.00
MPP	000617225	JOINT, SCREW - F.O. PUMP INLET	D533406K	30.00	EA	62.24	1,867.32
MPP	000617233	COUPLING, RUBBER, WITH STUD & BOLTS,	FOR F.O. CIRCULATING GEAR PUMP M-105	24.00	EA	0.00	0.00
MPP	000617241	COUPLING, RUBBER, WITH STUD & BOLT.	FOR VALVE GEAR PUMP M208	0.00	EA	0.00	0.00
MPP	000617258	VALVE, SOLENOID, SIZE AND12	115 VAC, FOR CT, s/n# 499571	1.00	EA	1,190.63	1,190.63
MPP	000617266	VALVE, SOLENOID, 1-1/2" 115VAC, FOR CT	NOX WTR DRAIN	1.00	EA	0.00	0.00
MPP	000617357	SEAT, LUBE OIL SYSTEM		18.00	EA	0.00	0.00
MPP	000617365	ELEMENT, THERMOSTAT. FOR LUBE OIL SYSTEM	130 DEGREE F	18.00	EA	0.00	0.00
MPP	000617415	PACKING, AIR COOLER INLET. AIR COOLER	ADMISSION PIPE D501501K	2.00	EA	0.00	0.00
MPP	000617423	TRANSMITTER, PRESSURE	0-300 PSI	1.00	EA	1,795.72	1,795.72
MPP	000617431	ORING, ADAPTER FLANGE TEFLON		1.00	EA	24.79	24.79
MPP	000617449	ORING, PROCESS FLANGE, TEFLON		1.00	EA	24.79	24.79
MPP	000617456	VALVE, 1/2" ITT DIAFLO. FOR GLEGG WATER	PURIFICATION SYSTEM	22.00	EA	194.45	4,277.95
MPP	000617472	MODULE, DIGITAL SLAVE		3.00	EA	0.00	0.00
MPP	000617480	MODULE, ANALOG SLAVE		1.00	EA	0.00	0.00
MPP	000617563	SWITCH, PRESSURE, LOW	FOR LOPX 710 PURIFIER	3.00	EA	221.81	665.43
MPP	000617571	SWITCH, PRESSURE, HIGH	FOR LOPX 710 PURIFIER	1.00	EA	248.42	248.42
MPP	000617589	BELT, FAN, 2 GROOVES	FOR LO COOLER FAN "B"	7.00	EA	57.66	403.64
MPP	000617597	COOLER, AIR	INTERCOOLER/PIPING	2.00	EA	14,035.84	28,071.68
MPP	000617621	BELT, FAN	FOR COLT RADIATOR	6.00	EA	24.76	148.55
MPP	000617647	TRANSMITTER, TEMPERATURE TT-100, 0-2000F	THERMOCOUPLE. FOR CT CONTROL.	4.00	EA	393.99	1,575.96
MPP	000617654	TRANSMITTER, TEMPERATURE, TT-200, 0-120F	FOR CT CONTROL	2.00	EA	312.00	624.00
MPP	000617662	TRANSMITTER, TEMPERATURE, TT200, 0-400F	FOR CT CONTROL	5.00	EA	458.64	2,293.20
MPP	000617670	TRANSMITTER	SPEED SENSOR, NGG, ST100	1.00	EA	280.80	280.80
MPP	000617688	TRANSMITTER	SPEED SENSOR, NPT, ST100	1.00	EA	312.00	312.00
MPP	000617696	FUSE, CONTROL, 1.5AMP. FOR CT CONTROL		0.00	EA	0.00	0.00
MPP	000617704	RETAINER	UPPER SPRING SEAT	3.00	EA	0.00	0.00
MPP	000617712	FUSE, CONTROL, 0.5 AMP, FOR CT CONTROL.		0.00	EA	0.00	0.00
MPP	000617720	FUSE, CONTROL, 0.3 AMP. FOR CT CONTROL.		0.00	EA	0.00	0.00
MPP	000617738	METER, DIGITAL SCALING, RANGE 0	TO +19,999 PPH. FOR IHI FUEL/WTR FLOW.	2.00	EA	384.80	769.60
MPP	000617845	METER, MW, 0-18 MW, AB40, 5 AMP, 120VAC,	3WRWP	1.00	EA	719.92	719.92

NOTE: SOH - Stock on Hand

Source: DARS 3342 Report (as of 5/31/07)

Maui Electric Company, Limited

MATERIALS PHYSICAL INVENTORY
MAALAEA POWER PLANT

WH	STOCK CODE	Item	Description	SOH	Unit	Price/ Unit	Total Cost/ Item
MPP	000617852	SWITCH, PRESSURE		1.00	EA	0.00	0.00
MPP	000617860	RELAY, DC	CONTROL, TYPE PK	3.00	EA	271.86	815.58
MPP	000617878	RELAY, DC	CONTROL TYPE PK	1.00	EA	0.00	0.00
MPP	000617886	TIMER, 120VAC, TDO, 0.5 TO 55 SEC		1.00	EA	207.71	207.71
MPP	000617993	COIL, SOLENOID. FOR HYDRAULIC SYSTEM		3.00	EA	0.00	0.00
MPP	000618009	VALVE, SOLENOID, COMPLETE. FOR HYDRAULIC	SYSTEM.	1.00	EA	0.00	0.00
MPP	000618017	ORING. FOR WSPX 303TGP-71 WATER	PURIFIER.	6.00	EA	0.00	0.00
MPP	000618025	INDICATOR. FOR AC SOLENOID.	FOR WSPX 303TGP-71 WATER PURIFIER.	7.00	EA	7.95	55.64
MPP	000618041	CONTAINER, WATER. FOR WSPX 303TGP-71	WATER PURIFIER.	1.00	EA	527.06	527.06
MPP	000618058	PLATE, CLAMP. FOR TUBE CONNECTION	FOR OIL MIST DETECTOR	4.00	EA	0.00	0.00
MPP	000618066	PLATE, RUBBER. FOR TUBE CONNECTION	FOR OIL MIST DETECTOR	4.00	EA	0.00	0.00
MPP	000618074	BEARING, LINK BELT PILLOW BLOCK, 2-3/16"	FOR L.O. COOLER	3.00	EA	320.07	960.21
MPP	000618082	METER, MEGAWATT, FS208V, 5A, 3P,4W,	SCALE 0-4MW, AB40, PT4160/208,	3.00	EA	539.25	1,617.75
MPP	000618090	SOLENOID, STARTER	FOR DELCO REMY STARTER	6.00	EA	124.82	748.92
MPP	000618108	CONTROLLER, DSLC		1.00	EA	0.00	0.00
MPP	000618298	FILTER/REGULATOR, ARO, WITH GAUGE AND	AUTO DRAIN - 1/2" LOPX 710	2.00	EA	156.24	312.48
MPP	000618306	ASSEMBLY, FUEL OIL DAMPER	GROUP 515A	2.00	EA	1,749.28	3,498.56
MPP	000618314	KIT, REPAIR, ACE 038N3 NVBP. FOR IMO	WEIR PUMP (INCLUDES SHAFT SEAL, BALL	4.00	KT	311.93	1,247.73
MPP	000618322	ORING, ARO. FOR AIR REGULATOR PURIFIER	LOPX 710	3.00	EA	0.00	0.00
MPP	000618330	SEAL, O-RING. FOR WATER COOLING SYSTEM	505MU	10.00	EA	4.54	45.36
MPP	000618348	SEAL, OIL. FOR L.O. PUMP, 35 X 55 X 8		4.00	EA	0.00	0.00
MPP	000618355	SPIDER, COUPLING. FOR L.O. SCAVENGING	AND F.O. PUMP A40.	3.00	EA	6.79	20.36
MPP	000618389	PLUG (FILLER), M14-16 F.O. PURIFIER	MAB206S	5.00	EA	24.09	120.43
MPP	000618397	PLUG (DRAIN), M14-16 F.O. PURIFIER	MAB206S	6.00	EA	35.31	211.83
MPP	000618405	DRIVE SHAFT	AIR START DISTRIBUTOR	1.00	EA	1,176.56	1,176.56
MPP	000618413	BEARING, AIR OIL/F.O. PRIMING PUMP,	C SERIES	6.00	EA	6.52	39.12
MPP	000618421	BEARING, AIR OIL/F.O. PRIMING PUMP,	LSV 34-16	5.00	EA	15.81	79.06
MPP	000618439	SEAL, OIL, AIR OIL/F.O. PRIMING PUMP,	LSV 34-16	5.00	EA	2.04	10.19
MPP	000618447	BELT, COG, BUILDING VENTILATION		10.00	EA	12.00	120.00
MPP	000618496	REDUCER, TYPE "B", 3.40, FOR M13 F.O.	CIRCULATING PUMP	0.00	EA	0.00	0.00
MPP	000618504	SEAL, MECHANICAL, ULTRA FILTRATION	SYSTEM	3.00	EA	47.92	143.75
MPP	000618512	MOTOR, BALDOR, ULTRA FILTRATION SYSTEM,	15HP, TEFC, 208-230/460VAC, 3 PH., 7"	1.00	EA	0.00	0.00
MPP	000618520	PUMP, CLOSED COUPLED, WITH UPGRADE	SILICON CARBIDE AND VITON MECHANICAL	1.00	EA	0.00	0.00
MPP	000618538	FILTER REGULATOR, PRESSURE, 1/2"	AUTO DRAIN, METAL BOWL, RELIEVING	2.00	EA	124.53	249.05
MPP	000618546	FILTER REGULATOR, PRESSURE,	100 PSI, NORGREN, AIR L.O. PURIFIER	0.00	EA	95.73	0.00
MPP	000618579	VALVE, CHECK, POPPET, 1PSI BREAKING	PRESSURE BODY TEFLON FPA, SEALS VITON	6.00	EA	120.85	725.09
MPP	000618587	ASSEMBLY, COLORIMETER. FOR HACH C-17	CLORINE ANALYZER.	1.00	EA	322.27	322.27
MPP	000618595	END, ROD, 3/8" FEMALE THREADED.	FUEL PRESSURE REGULATOR	4.00	EA	0.00	0.00
MPP	000618835	SEAL, MECHANICAL, BUNA. FOR VIKING PUMP	MODEL # FH432.	2.00	EA	32.29	64.58
MPP	000618843	PUMP, GENERAL PURPOSE, STEEL FITTED 1/2"	PORT, RV SET @ 100 PSI WITH BUNA	3.00	EA	0.00	0.00
MPP	000618850	CONVERTER, FLOW, 24VDC, 4-20 MA OUTPUT.		1.00	EA	0.00	0.00
MPP	000618918	MOTOR, BALDOR, FRAME 56, 1/3 HP, 1PH,	1750RPM, 60 CYCLE, 115/208/230 VOLT,	1.00	EA	138.29	138.29
MPP	000618926	BOLT, STUD, COOLING WATER IN CYLINDER	COVER, (Metric & Multistandard 10 x 35	62.00	EA	0.40	24.62
MPP	000618934	PLUG, CONN ROD - SPECIAL 003-003		15.00	EA	76.58	1,148.63
MPP	000618942	ROTOR, AIR DISTRIBUTOR, 012-025		1.00	EA	0.00	0.00
MPP	000618959	MODULE, FIELD BUS SLAVE, IMFEC12		1.00	EA	0.00	0.00
MPP	000618967	MODULE, DIGITAL SLAVE/INPUT, IMDS102		0.00	EA	0.00	0.00
MPP	000618975	PUMP, GEAR, ENGINE DRIVEN, ROCKER ARM -	L.O. PUMP 005-065-3, S/N 11691301.	1.00	EA	0.00	0.00
MPP	000619379	VALVE, SPEED CONTROL.		2.00	EA	371.28	742.56
MPP	000619387	VALVE, SHUTTLE, DC-41.		2.00	EA	557.44	1,114.88
MPP	000619395	FILTER, TRANSMISSION. FOR OUTBOARD	BEARING.	4.00	EA	7.72	30.86
MPP	000619890	HUB, LOVE JOY COUPLING, 3/16 X 3/32 KW	BORE .625. FOR LUBE OIL SYSTEM	2.00	ST	31.46	62.91
MPP	000619908	MOTOR, 25 HP, 3535 RPM, 284TS FRAME,	TEFC, 1.15 SF.	1.00	EA	0.00	0.00
MPP	000619916	PLATE, ELASTIC. F.O. PURIFER #2,	MAB206S.	2.00	EA	31.60	63.19
MPP	000619924	CONTACTOR, SIZE 3, 5 POLE, SIZE 3, J. W.	FAN.	1.00	EA	1,354.08	1,354.08
MPP	000619932	VALVE, SAFETY, BRONZE, 1" X 1-1/2",	AIR SERVICE, SET 265 PSI, CAPACITY 1666	2.00	EA	206.24	412.47
MPP	000619940	VALVE, SAFETY, BRONZE, 1/2" X 3/4"	AIR SERVICE, SET 265 PSI, CAPACITY	5.00	EA	150.61	753.07

NOTE: SOH - Stock on Hand

Source: DARS 3342 Report (as of 5/31/07)

Maui Electric Company, Limited

MATERIALS PHYSICAL INVENTORY
MAALAEA POWER PLANT

WH	STOCK CODE	Item	Description	SOH	Unit	Price/ Unit	Total Cost/ Item
MPP	000619957	VALVE, SAFETY, BRONZE, 1" X 1-1/4",	AIR SERVICE, SET 265 PSI, CAPACITY	2.00	EA	183.32	366.64
MPP	000619965	VALVE, DRAIN, AUTOMATIC, 1" FNPT, 115V	60H, BRASS, 600PSI.	2.00	EA	390.60	781.20
MPP	000619973	PACKING, SHEET, V RUBBER (MW-12)	COVER (ANTI COUPLING SIDE) D501536K.	9.00	EA	31.20	280.80
MPP	000619981	PLATE, LOCATING, V.G.L.O.		8.00	EA	0.00	0.00
MPP	000619999	PACKING, SHEET, V RUBBER (MW-12)	COVER (ANTI COUPLING SIDE) D501536K.	0.00	EA	0.00	0.00
MPP	000620039	COMBUSTOR	COMBUSTION TURBINE	0.00	EA	130,000.00	0.00
MPP	000620088	GLASS, SIGHT, MAB206S, FOR CT FUEL OIL	PURIFIER.	2.00	EA	0.00	0.00
MPP	000620096	VALVE, CHECK. FOR WSPX 303 WATER	PURIFIER.	2.00	EA	0.00	0.00
MPP	000620104	NIPPLE. FOR WSPX 303 WATER PURIFIER.		1.00	EA	0.00	0.00
MPP	000620195	CROSSPIECE, AIR START DISTRIBUTOR,	005-065-1.	1.00	EA	625.20	625.20
MPP	000620203	MOTOR, LUMITORQUE. FOR L120-10 ACTUATOR	HRSG MOV.	1.00	EA	382.11	382.11
MPP	000620211	RTD, EXCITER VENT.		1.00	EA	461.17	461.17
MPP	000620229	KIT, REPAIR. FOR WATER COLUMN PORT	MAWP 900 PSIG, JOB MS 2002-020.	6.00	EA	108.33	649.96
MPP	000620237	BUFFER, CT FUEL OIL PURIFIER, MAB 206S.		6.00	EA	39.23	235.39
MPP	000620245	GASKET, FLEXITALLIC, 3/4", 150PSI,	ASME B16.20.	9.00	EA	0.00	0.00
MPP	000620252	BLOCK, FRICTION. CT FUEL OIL PURIFIER,	MAB 206S	6.00	EA	258.04	1,548.26
MPP	000620260	PISTON, UNLOADER. FOR QUINCY COMPRESSOR	LSV 48-116.	3.00	EA	14.98	44.93
MPP	000620278	PIN, SPLIT, CT FUEL OIL PURIFIER,	MAB 206S.	10.00	EA	1.40	14.04
MPP	000620286	GLASS, SIGHT, 85MM A.D., 97.5MM LG.,	MAB 206S.	2.00	EA	46.80	93.60
MPP	000620344	FILTER, HEPA, 24 X 24 X 11-1/2, 99.97%	EFFICIENCY. FOR GLEGG DEGASSIFIER	1.00	EA	0.00	0.00
MPP	000620351	BEARING, THRUST BALL, PRECISION A/C,	SUNFLO 2000 PUMP, BORE B OD B.	3.00	EA	43.34	130.03
MPP	000620369	BEARING, THRUST BALL, PRECISION A/C	SUNFLO 2000 PUMP, BORE C OD 2.	3.00	EA	60.33	180.99
MPP	000620476	PUMP, END SUCTION CENTRIFUGAL, 3500 RPM,	1/2 HP, 460/3/60, TEFC CLOSED COUPLED,	2.00	EA	0.00	0.00
MPP	000620484	PUMP, FUEL OIL TRANSFER. TYPE 1, "A"	SERIES.	2.00	EA	0.00	0.00
MPP	000620492	BALL, CHROME STEEL, GRADE 200, TOLERANCE	+ .0002, 2-14-1-3.	103.00	EA	0.00	0.00
MPP	000620500	PLUG, HEX HEAD, 3/8", NATIONAL FINE,	Z-14-1-3.	16.00	EA	0.00	0.00
MPP	000620518	PLATE, GASKET INSPECTION. FOR AMARILLO	RIGHT ANGLE GEAR DRIVE.	16.00	EA	0.73	11.65
MPP	000620526	GASKET, F110 HORIZONTAL CARRIER. FOR	AMARILLO RIGHT ANGLE GEAR DRIVE.	27.00	EA	0.00	0.00
MPP	000620567	ACTUATOR, DOUBLE ACTION PNEUMATIC,	HYDROMATION FILTER KEYSTONE VALVE.	2.00	EA	258.18	516.36
MPP	000620831	COVER, CYLINDER HEAD ROCKER ARM	INSPECTION.	0.00	EA	0.00	0.00
MPP	000620872	SHAFT, BRAKE REVOLUTION COUNTER - WHPX	510.	4.00	EA	3.92	15.68
MPP	000620880	RING, LABYRINTH, ROTATING PART	TV57H-D	1.00	EA	473.20	473.20
MPP	000620997	COVER, CYLINDER HEAD, ROCKER	INSPECTION, ITEM 42.	1.00	EA	0.00	0.00
MPP	000621003	UNIT, DODGE ROLLER BEARING FLANGE.	JACKET WATER SYSTEM.	2.00	EA	350.81	701.62
MPP	000621045	VALVE, RELIEF. AIR PIPING SYSTEM	CHECK & CONTROL VALVE	2.00	EA	0.00	0.00
MPP	000621052	COUPLING, HALF. F.O. CIRCULATING PUMP		2.00	EA	24.80	49.60
MPP	000621060	BAR, LOCKING. FOR FUEL OIL PRIMARY	AND SECONDARY FILTER.	11.00	EA	0.00	0.00
MPP	000621078	PIPE, BRANCH. COOLING WATER PIPING	SYSTEM, D501596K-1.	3.00	EA	240.93	722.80
MPP	000621102	ASSEMBLY, NON-REVERSABLE, AMARILLO	GEAR BOX. RATIO - 5.5:1, S/N 249210	1.00	EA	0.00	0.00
MPP	000621128	SLEEVE, LOVEJOY S FLEX COUPLING.	TAG: OSMO RO #3 2ND PASS	2.00	EA	20.48	40.97
MPP	000621136	SLEEVE, LOVEJOY S FLEX COUPLING.	TAG: OSMO RO #1 MACHINE 1ST PASS PUMP.	2.00	EA	26.41	52.81
MPP	000621144	MOTOR, FRAME 145TC, RPM 3450, 60HZ,	2 H.P., 3 PH, CLASS B, S.F. 1.15, TEFC	2.00	EA	243.46	486.91
MPP	000621151	SEAL, MECHANICAL, WITH BUNA N, FOR	CORKEN PUMP. TAG: M10-11 JW HEATER	3.00	EA	0.00	0.00
MPP	000621169	SPACER, ELEMENT (REX ES10-R OMEGA)	WITH CSC & HS RING. TAG: DEMIN WATER	3.00	EA	167.23	501.70
MPP	000621177	PUMP, CORKEN, CORO-FLO. TAG: M10-11	JW HEATER PUMP, S/N - XT210353.	1.00	EA	0.00	0.00
MPP	000621185	FILTER, AIR. FOR JOY TWIST AIR 220	COMPRESSOR.	1.00	EA	90.72	90.72
MPP	000621532	CAP, NUT. PURIFIERS, WHPX 410, WHPX510.		7.00	EA	228.46	1,599.20
MPP	000621540	SHAFT, EXTENSION, NT20A, 1.4021, HCP	19.05MM, O.W.W.T.W.	2.00	EA	473.93	947.86
MPP	000621656	PIPE, INLET. STARTING VALVE	MANEUVERING AIR PIPING SYSTEM.	11.00	EA	482.75	5,310.24
MPP	000621664	PIPE, CONNECTION. EXHAUST EXPANSION.	DRAWING #D532007K.	4.00	EA	176.80	707.20
MPP	000622043	PUMP, LUBE OIL BY-PASS	AK195D	2.00	EA	947.34	1,894.67
MPP	000622050	ROD, END ASSEMBLY	INLET & TRANSFER GEAR BOX ASSEMBLY	3.00	EA	988.66	2,965.98
MPP	000622068	PACKING, PREFORM	FOR INLET & TRANSFER GEAR BOX ASSY.	25.00	EA	0.00	0.00
MPP	000622076	BEARING, ROD END	LM 2500, MECHANICAL LINKAGE FIG. 135	4.00	EA	117.45	469.79
MPP	000622084	PACKING, PREFORMED	FOR LUBE & SCAVENGE PUMP LM 2500	10.00	EA	2.60	26.00
MPP	000622092	LINK, ASSEMBLY, MOUNT	INLET & TRANSFER GEAR BOX ASSEMBLY	3.00	EA	988.66	2,965.98
MPP	000622100	CLEVIS, ACTUATION LEVER	FOR COMPRESSION SECTION ASSEMBLY	10.00	EA	66.94	669.40
MPP	000622225	BOLT, HEX, SOCKET HEAD, 21.7MM	CONNECTING ROD, D501103K	23.00	EA	0.00	0.00
MPP	000622233	LIMITER, CURRENT, 3 AMP @ 600 VAC	CAT.# EL3003R	2.00	EA	269.46	538.92
MPP	000622266	BEARING, BALL, WATER PURIFIER	WSPX 303	6.00	EA	26.89	161.35

NOTE: SOH - Stock on Hand

Source: DARS 3342 Report (as of 5/31/07)

Maui Electric Company, Limited

MATERIALS PHYSICAL INVENTORY
MAALAEA POWER PLANT

WH	STOCK CODE	Item	Description	SOH	Unit	Price/ Unit	Total Cost/ Item
MPP	000622274	BEARING, ROLLER, K-1 STRAINER	MAALAEA 10-11	2.00	EA	26.00	52.00
MPP	000622282	SPRING, L.O. PURIFIER	MAB 103B	3.00	EA	0.00	0.00
MPP	000622290	VALVE, RELIEF, SET @ 250 PSI	CAP 564 SCFM, SIZE: 1/2"	1.00	EA	134.99	134.99
MPP	000622308	AIR REGULATOR,	FISHER 400 TO 100 # PSI	2.00	EA	958.72	1,917.44
MPP	000622431	RACE, BEARING	AMARILLO GEAR	1.00	EA	43.29	43.29
MPP	000622449	RACE, BEARING	AMARILLO GEAR	0.00	EA	33.49	0.00
MPP	000622456	BRUSH, CARBON - GROUNDING	M-15 ONLY, GENERATOR ROTOR	4.00	EA	0.00	0.00
MPP	000622464	BOLT, DISC, MOUNTING, HEX HEAD	3/4"-16 x 7-1/4"	22.00	EA	3.89	85.66
MPP	000622472	ANODE, ZINC #11	6" x 1-1/4" x 6" W/ 5/8" DIA. RECESSED	49.00	EA	0.00	0.00
MPP	000622480	WATER, EXPANSION, JACKET	JOINT - M13 UNIT	1.00	EA	0.00	0.00
MPP	000622498	RING, GEAR, SPLIT	STARTER MOTOR	1.00	EA	0.00	0.00
MPP	000622688	COUPLING, COMPLETE, FALK, STEEL FLEX	HUB COVER AND GRID ASSY	0.00	EA	0.00	0.00
MPP	000622696	BOLT	VSV FEEDBACK CABLE BRACKET	5.00	EA	0.00	0.00
MPP	000622704	BEARING	DODGE 1 -11/16 PEDESTAL FAN	1.00	EA	0.00	0.00
MPP	000622712	GASKET, NEOPRENE	1/2"w x 3/8" thk x 25'	0.00	EA	0.00	0.00
MPP	000623231	GASKET MATERIAL, GARLOCK 5500	1/16" X 60" X 60", 2600 PSI	3.00	EA	188.16	564.47
MPP	000623249	GASKET MATERIAL, GARLOCK 5500	3/32" X 60" X 60"	4.00	EA	200.25	801.01
MPP	000623256	PLATE, LABRYNTH, BLOWER SIDE	MAALAEA 12 -13	2.00	EA	0.00	0.00
MPP	000623264	SPRING, RELEASE ASSY, 125VDC	TAG: HYDRAULIC STARTER BREAKER	1.00	EA	0.00	0.00
MPP	000623272	DS CIRCUIT BREAKER, FIELD MOUNTING	INST. FOR UNDER VOLTAGE TRIP DEVICE	1.00	EA	0.00	0.00
MPP	000623280	SHUNT TRIP, 125VDC	MAALAEA 17 - 19	1.00	EA	0.00	0.00
MPP	000623298	GASKET MATERIAL, GARLOCK 5500	1/8" X 60" X 60" 3300 PSI	1.00	EA	255.87	255.87
MPP	000623306	FALK, COUPLING COMPLETE, STEELFLEX	HUB, COVER AND GRID	1.00	EA	99.47	99.47
MPP	000623678	BULB, HALOGEN, 120 VAC, 1507T45	MAALAEA	6.00	EA	13.58	81.48
MPP	000623686	GAUGE, REPAIR KIT, 15.5"	FOR S.O. 42158 ONLY, VP 3000 SP	4.00	EA	0.00	0.00
MPP	000623694	FILTER, AIR	FARR 30/30, 24" X 12" X 2"	116.00	EA	4.37	507.48
MPP	000623702	SEAL, OIL	TURBOCHARGER - LUBE OIL PUMP	2.00	EA	0.00	0.00
MPP	000623710	VILEDON, MINI 75 - 4/44, FILTER	24" X 24" x 4", 3 PER BOX	54.00	BX	241.39	13,034.97
MPP	000623728	GASKET, MANHOLE, SPIRAL WOUND	12" X 16" X .978 WIDE X 1/4" THICK	24.00	EA	60.50	1,452.05
MPP	000623736	COLLAR, PLAIN FOR FUEL RACK SHAFT	1" I.D.	4.00	EA	0.00	0.00
MPP	000623744	CONTROL, DIGITAL, WOODWARD 503	SYSTEM BOARD	0.00	EA	0.00	0.00
MPP	000623751	CONTROL, DIGITAL, WOODWARD 503	SYSTEM BOARD	1.00	EA	0.00	0.00
MPP	000623769	CONTROL, DIGITAL, WOODWARD 503	SYS. SQ426 MASTER CPU	1.00	EA	0.00	0.00
MPP	000623777	VANES, STANDARD 304 SS NO CUT	INCL: (3) CAPSCREW P/N 8420408	1.00	EA	28.60	28.60
MPP	000623785	BUSHING, SPINDLE DRIVE, WITH PIN	MICROSEPARATOR, MODEL TSK 50M	2.00	EA	373.56	747.12
MPP	000623793	SHAFT, SPINDLE, INC. SNAP RING 9210030	MICROSEPARATOR, MODEL TSK 50M	2.00	EA	433.37	866.74
MPP	000623801	LINER, 50M, BUNA N FOR CF50	MICROSEPARATOR, MODEL TSK 50M	2.00	EA	224.17	448.34
MPP	000623819	O-RING, 50M, BUNA N 3MM	MICROSEPARATOR, MODEL TSK 50M	2.00	EA	24.92	49.84
MPP	000623827	PULLEY, SPINDLE, 50M (A2-80)	MICROSEPARATOR, MODEL TSK 50M	1.00	EA	78.94	78.94
MPP	000623835	DAMPNER, VIBRATION	MICROSEPARATOR, MODEL TSK 50M	9.00	EA	7.16	64.40
MPP	000623843	MOTOR, PULLEY, (A2-106 MOTOR PULLEY)	MICROSEPARATOR, MODEL TSK 50M	1.00	EA	78.94	78.94
MPP	000623850	B/M PORT COMPONENT 4511, 95F, 1100	3000 PSI, 15.5" FOR S.O. 55064 ONLY	4.00	EA	0.00	0.00
MPP	000623868	RING, RETAINING, OIL, ROTATING PART	TV57H-D, FIG. 9 MARK #35	2.00	EA	3,271.84	6,543.68
MPP	000623975	O-RING, GENERATOR	L.O. TANK MIST COLLECTOR	14.00	EA	23.30	326.14
MPP	000623991	LINER, FILTER, GENERATOR	L.O. TANK MIST COLLECTOR	0.00	PK	0.00	0.00
MPP	000624007	SEAL, MECHANICAL	GENERATOR LUBE OIL PUMP	2.00	EA	58.24	116.48
MPP	000624015	BEARING, ROLLER	GENERATOR LUBE OIL PUMP	2.00	EA	67.60	135.20
MPP	000624023	TOWEL, WIPER, TERI, REINFORCED	(6 BX)	22.00	CS	57.07	1,255.55
MPP	000624031	LINER, TRASH, HEAVY DUTY	33 X 39	9.00	CS	28.82	259.42
MPP	000624049	MAT, 4 IN 1, UNIVERSAL	16"W X 80"L	40.00	BX	47.74	1,909.45
MPP	000624056	SOCK, ABSORBENT	3" X 42"L	55.00	BX	30.87	1,697.75
MPP	000624064	ABSORBENT, WHITE, OIL SPILL, PAD	MAALAEA	48.00	BL	43.82	2,103.51
MPP	000624403	KIT, REPAIR, FISHER CONTROLS	INCLUDES 1 EA SEAT RING, VALVE PLUG,	1.00	ST	0.00	0.00
MPP	000624411	STRAINER, SCREENER, STANDARD TYPE	ASSEMBLY (SUS 304) MESH 80, SIZE 2	0.00	EA	0.00	0.00
MPP	000624429	VALVE, STOP, HIGH PRESSURE	FUEL PUMP	1.00	EA	421.26	421.26
MPP	000624569	REDI-SLEEVE, .787 SEAL WIDTH	GEAR BOX	4.00	EA	21.21	84.82
MPP	000624577	REDI SLEEVE, .512 SEAL WIDTH	GEAR BOX	9.00	EA	27.20	244.82
MPP	000624585	NUT, LOCK, 1-1/4 - 12 HEX	CRANK SHAFT COUPLING, GROUP: B24	23.00	EA	0.00	0.00
MPP	000624593	WASHER, SPECIAL, 1-1/4"	CRANK SHAFT COUPLING, GROUP: B24	11.00	EA	0.00	0.00
MPP	000624601	BOLT, COUPLING, DISC TO CRANK SHAFT	1-1/4 - 12 x 4-13/32, GROUP B24	11.00	EA	0.00	0.00
MPP	000624775	RIBBON, PRINTER, IHI COMPUTER	(1 SET = 6) SEQUENCE ALARM	4.00	ST	0.00	0.00
MPP	000624783	BEARING, BALL	FOR CHAINS & TIGHTENERS	2.00	EA	0.00	0.00
MPP	000624791	TIGHTENER, BELT	WATER PURIFIER	4.00	EA	0.00	0.00
MPP	000624809	SWITCH, ELECTRO, SERIES 24	GENERATOR BREAKER SWITCH	1.00	EA	0.00	0.00
MPP	000624817	INTERFACE, REMOTE, I/O	MODULE (TSO-22764)	1.00	EA	0.00	0.00
MPP	000624825	INTERFACE, REMOTE, I/O	MODULE (TSO - 23418)	1.00	EA	0.00	0.00
MPP	000624833	INTERFACE, REMOTE, I/O	MODULE (TSO - 22767)	1.00	EA	0.00	0.00

NOTE: SOH - Stock on Hand

Source: DARS 3342 Report (as of 5/31/07)

Maui Electric Company, Limited

MATERIALS PHYSICAL INVENTORY
MAALAEA POWER PLANT

WH	STOCK CODE	Item	Description	SOH	Unit	Price/ Unit	Total Cost/ Item
MPP	000625061	SEAL, MECHANICAL	FOR SHER-WATER PUMP ON #2 PURIFIER	0.00	EA	0.00	0.00
MPP	000625079	BUSHING, TAPER, LOC	TAG: MITSUBISHI BASEMENT FAN	1.00	EA	25.92	25.92
MPP	000625087	BEARING, BALL, O.W.W.T.	BASKET STRAINER	1.00	EA	0.00	0.00
MPP	000625095	AXIE PIN	F.I. PUMP ADJ. DEVICE, D502292K-1	20.00	EA	42.12	842.40
MPP	000625103	BEARING, BALL, O.W.W.T.	BASKET STRAINER	1.00	EA	0.00	0.00
MPP	000625111	AXIE PIN	F.I. PUMP ADJ. DEVICE, D502292K-1	20.00	EA	42.12	842.40
MPP	000625327	KIT, ADAPTER, 1-1/2" CPVC	UNION SENSOR (WATER TREATMENT)	2.00	EA	144.87	289.73
MPP	000625335	SENSOR, TEMPERATURE, T-3	WITH 40' CABLE	1.00	EA	2,433.60	2,433.60
MPP	000625343	HOSE, HYDRAULIC, 3/4" X 46"	M19 HYDRAULIC STARTER, 944	1.00	EA	0.00	0.00
MPP	000625350	HOSE, HYDRAULIC, ASSY, 3/4" X 57"	944 W/SMS12 ASY	1.00	EA	404.20	404.20
MPP	000625368	HOSE, BRAIDED, STAINLESS STEEL	ASSY., 956 R.U. TEFLON, 1/4" X 13"	1.00	EA	37.30	37.30
MPP	000625756	TAPE, ELECTRICAL, BLACK VINYL	SCOTCH 33+, FLAME RETARDANT	77.00	RL	4.48	344.78
MPP	000625764	STRAP, CABLE TIES, 5.5"	BLK., SELF-LOCKING, 100/PKG	5.00	PG	16.99	84.94
MPP	000626036	FUSE, CURRENT LIMITING, TYPE EJ-1	15.5 MAXIMUM KV, 60 HZ, 0.5E AMP	4.00	EA	0.00	0.00
MPP	000626044	O-RING, MAIN BEARING, L.O. SYSTEM	MAALAEA 10 - 11 - 12 - 13	20.00	EA	1.05	21.04
MPP	000626051	O-RING, LINER FEED/MAIN FEED	L.O. SYSTEM	60.00	EA	1.00	60.00
MPP	000626069	VALVE, FLANGED LIFT CHECK, 1", 150#	ALLOY 20	0.00	EA	379.14	0.00
MPP	000626200	CELL, CONDUCTIVITY, CELL CONTENT 10,	GLEGG R.O. FIRST PASS PRODUCT OUTLET	2.00	EA	390.00	780.00
MPP	000626226	DEVELOPER, SPOTCHECK	SK2-S2 MAGNAFLUX	9.00	EA	11.61	104.45
MPP	000626234	PENETRANT, SPOTCHECK	SKL-SP1 MAGNAFLUX	10.00	EA	9.08	90.84
MPP	000626242	CLEANER/REMOVER, SPOTCHECK	SKC-S MAGNAFLUX	13.00	EA	15.44	200.72
MPP	000626259	VALVE, SAFETY RELIEF, CAP 329 SCFM	1/2" x 3/4" SET @ 140 PSI	4.00	EA	158.43	633.71
MPP	000626267	BEARING, ROLLER, WITH SNAP RING	O.D. 3.933", I.D. 1.768"	2.00	EA	0.00	0.00
MPP	000626275	BEARING, ROLLER, WITH SNAP RING	O.D. 4.720", I.D. 2.556"	2.00	EA	0.00	0.00
MPP	000626283	SEAL, OIL, NATIONAL	O.D. 4.500", I.D. 3.500" SHAFT SIZE	2.00	EA	0.00	0.00
MPP	000626291	SEAL, OIL, NATIONAL	O.D. 2.740", I.D. 1.750" SHAFT SIZE	2.00	EA	0.00	0.00
MPP	000626309	DIODE/40, QUINT	DELTA V SYSTEM	1.00	EA	0.00	0.00
MPP	000626317	BOARD, POWER SUPPLY	QUINT PS100 240AC/24DC10A	1.00	EA	0.00	0.00
MPP	000626325	PREPARED BATH	14AM MAGNAFLUX MAGNAGLO	13.00	EA	10.82	140.69
MPP	000626333	TAPPET GUIDE, VALVE GEAR	TAPPET GUIDE AND PUSH ROD	2.00	EA	0.00	0.00
MPP	000626341	KEY, VALVE GEAR	TAPPET AND PUSH ROD	6.00	EA	0.00	0.00
MPP	000626358	PIN, LOCATING, VALVE GEAR	TAPPET GUIDE AND PUSH ROD	6.00	EA	0.00	0.00
MPP	000626366	BALL SEAT, LOWER, VALVE GEAR	TAPPET GUIDE AND PUSH ROD	6.00	EA	0.00	0.00
MPP	000626374	TAPPET GUIDE	TAPPET GUIDE AND PUSH ROD	4.00	EA	0.00	0.00
MPP	000626382	PIN, ROLLER, VALVE GEAR	TAPPET GUIDE AND PUSH ROD	6.00	EA	0.00	0.00
MPP	000626390	PLATE, LOCATING, VALVE GEAR	TAPPET GUIDE AND PUSH ROD	6.00	EA	0.00	0.00
MPP	000626408	FLANGE, VALVE GEAR	TAPPET GUIDE AND PUSH ROD	2.00	EA	0.00	0.00
MPP	000626416	PUSH ROD, EXHAUST, VALVE GEAR	TAPPET GUIDE AND PUSH ROD	2.00	EA	0.00	0.00
MPP	000626424	PUSH ROD, INTAKE, VALVE GEAR	TAPPET GUIDE AND PUSH ROD	2.00	EA	0.00	0.00
MPP	000626432	BOLT, STUD, VALVE GEAR	TAPPET GUIDE AND PUSH ROD	8.00	EA	0.00	0.00
MPP	000626630	BOLT, PUSH ROD / VALVE GEAR ROCKER ARM	MAALAEA 10 - 11 - 12 - 13	6.00	EA	0.00	0.00
MPP	000626648	SWITCH, PRESSURE, GENERAL SET POINT	6 PSIG, RANGE .75-12 PSI, 15 AMPS	3.00	EA	426.92	1,280.76
MPP	000626655	SLEEVE, CON ROD, SLAVE SIDE	MAALAEA 10 - 11 - 12 - 13	4.00	EA	0.00	0.00
MPP	000626697	PIPE JOINT PIECE FOR NEEDLE VALVE	VALVE GEAR ROCKER ARM, #1882510	1.00	EA	0.00	0.00
MPP	000626705	NUT/NIPPLE, VALVE GEAR ROCKER ARM	#1882510, MITS 811E	4.00	EA	0.00	0.00
MPP	000626713	ANNUNCIATOR, ENGINE ANNUNCIATOR PANEL	MAALAEA 10 - 11 - 12 - 13	2.00	EA	103.02	206.04
MPP	000626721	O-RING, M15 CONDENSER FAN GEAR BOX	MAALAEA 17 - 19	10.00	EA	6.14	61.35
MPP	000626754	LEVER, ADJUSTING, ASSY.	CONSISTS OF PARTS 61 - 74. F.I. PUMP ADJ	4.00	EA	1,683.76	6,735.04
MPP	000626762	PIN, COLLAR	F.I. PUMP ADJ. DEVICE, D502292K-1	20.00	EA	56.16	1,123.20
MPP	000626770	SEAL , OIL, AMARILLO GEAR	2.375 X 3.500 X .375	6.00	EA	11.43	68.56
MPP	000626788	KIT, ASSEMBLY, NON REVERSE	AMARILLO GEAR	1.00	KT	1,508.00	1,508.00
MPP	000626796	WASHER, REX, BEV., STL., AMARILLO GEAR	MAALAEA 10 - 11 - 12 - 13	16.00	EA	0.00	0.00
MPP	000626804	BOLT, REX, STL., AMP 50	MAALAEA 10 - 11 - 12 - 13	16.00	EA	0.00	0.00
MPP	000626838	LOCKNUT, REX, AMARILLO GEAR	MAALAEA 10 - 11 - 12 - 13	16.00	EA	0.00	0.00
MPP	000626853	CONNECTOR, M12 & 13 TURBOCHARGER	MAALAEA 12 - 13	7.00	EA	0.00	0.00
MPP	000626887	HUB, 8 BLADED MANUAL, WITH QDE BUSHING	PARTS FO S/N F32908, M13 UNIT	1.00	EA	0.00	0.00
MPP	000626895	BLADES, RADIATOR, FOR S/N F32908	FOR M13 UNIT	2.00	EA	0.00	0.00
MPP	000627000	RETAINER, FUEL PUMP SHAFT BEARING	MAALAEA 4 - 5 - 6 - 7	1.00	EA	0.00	0.00
MPP	000627018	CARTRIDGE, RELAY	CUTLER HAMMER	12.00	EA	6.51	78.16
MPP	000627026	CONTROLLER (LV), WOODWARD 701A DSC	MAALAEA 1 - 2 - 3	1.00	EA	0.00	0.00
MPP	000627034	RING, SEAT, REPLACEMENT TRIM	FOR SN J130354	1.00	EA	1,654.80	1,654.80
MPP	000627042	PLUG, STEM, REPLACEMENT TRIM	FOR SN J130354	1.00	EA	3,072.88	3,072.88
MPP	000627059	KIT, REPAIR, REPLACEMENT TRIM	FOR SN J130354	3.00	EA	53.72	161.15
MPP	000627067	GASKET, SET, OVER 450F	REPLACEMENT TRIM	3.00	EA	58.90	176.69

NOTE: SOH - Stock on Hand

Source: DARS 3342 Report (as of 5/31/07)

Maui Electric Company, Limited

MATERIALS PHYSICAL INVENTORY
MAALAEA POWER PLANT

WH	STOCK CODE	Item	Description	SOH	Unit	Price/ Unit	Total Cost/ Item
MPP	000627075	VALVE, BALL, THREADED, 2000 SS	MAALAEA 14 - 16 - 17 - 18 - 19	7.00	EA	0.00	0.00
MPP	000627158	NUT	FOR PIPE JOINT, STARTING AIR PIPING	12.00	EA	0.00	0.00
MPP	000627166	SLEEVE	FOR PIPE JOINT, STARTING AIR PIPING	12.00	EA	0.00	0.00
MPP	000627174	NUT	FOR STUD PIPE JOINT	12.00	EA	0.00	0.00
MPP	000627182	SLEEVE	FOR STUD PIPE JOINT	12.00	EA	0.00	0.00
MPP	000627349	RING, WEAR, BAND	OVERSIZED FOR BORE SIZE 9.029" CYL	2.00	EA	389.41	778.82
MPP	000627356	RING, PISTON	OVERSIZED FOR BORE SIZE 9.029" CYL	6.00	EA	242.57	1,455.40
MPP	000627364	RING, WEAR, 9 X 7, ESV-IP-NL	MAALAEA 14 - 16	3.00	EA	149.90	449.69
MPP	000627430	VALVE, NEEDLE, PRESSURE REGULATING	FIG. #7	3.00	ST	0.00	0.00
MPP	000627448	VALVE, REGULATING, OIL PRESSSURE	FIG. #8	1.00	ST	0.00	0.00
MPP	000627455	DIAPHRAGM, OIL PRESSURE REGULATING VALVE	FIG. #8	1.00	ST	0.00	0.00
MPP	000627463	SPRING, SEAT, OIL PRESSURE REGULATING	VALVE, FIG. #8	1.00	ST	0.00	0.00
MPP	000627471	GASKET, SEAL, LUBE OIL SCAVENGER PUMP	MAALAEA 14 - 16 - 17 - 19	5.00	EA	0.00	0.00
MPP	000627505	CONNECTOR, FLEX	CRANKCASE, EXHAUST, VACUUM PIPE	2.00	EA	0.00	0.00
MPP	000627513	CONNECTOR, FLEX	CRANKCASE, EXHAUST, VACUUM PIPE	2.00	EA	0.00	0.00
MPP	000627521	CLAMP	WORM DRIVE HOSE 80, CRANKCASE	12.00	EA	2.06	24.76
MPP	000627539	HOSE, CONNECTING, O.W.W.T.S.	MAALAEA 4 - 5 - 6 - 7 - 8 - 9 - 10 - 11	3.00	EA	0.00	0.00
MPP	000627547	HOSE, BRAIDED, O.W.W.T.S.	MAALAEA 4 - 5 - 6 - 7 - 8 - 9 - 10 - 11	5.00	EA	0.00	0.00
MPP	000627554	RING, SEAL, O.W.W.T.S.	MAALAEA 4 - 5 - 6 - 7 - 8 - 9 - 10 - 11	6.00	EA	0.00	0.00
MPP	000627570	VALVE, SOLENOID, AIR CONTROLLED	2, 3 AND 4 WAY VALVES, 120DC	3.00	EA	86.80	260.40
MPP	000627620	GEAR, RING, STARTER MOTOR, C-124MU	MAALAEA 1 - 2 - 3, X1, X2	1.00	EA	0.00	0.00
MPP	000627638	PUMP, VIKING, GENERAL PURPOSE COMPLETE	STEEL FITTED, BUNA MECHANICAL SEAL	1.00	EA	0.00	0.00
MPP	000628313	LAMP, ASSEMBLY	HACH SERIES 5000 MODEL 6000	5.00	EA	25.97	129.83
MPP	000628321	MOTOR, BALDOR	JACKET WATER RADIATOR FAN	1.00	EA	0.00	0.00
MPP	000628339	BEARING, CAMSHAFT DRIVE AND	FUEL PUMP ASSEMBLY	1.00	EA	78.12	78.12
MPP	000628354	SENSOR, AIRPAX PASSIVE	MAALAEA 1 - 2 - 3, X2	4.00	EA	26.00	104.00
MPP	000628362	BEARING, ROLLER, FLANGED	DODGE TYPE E, 4 HOLES	2.00	EA	181.65	363.29
MPP	000628370	MODULE, VIBRATION, AERO GT	MODEL 3500/44M	1.00	EA	2,629.00	2,629.00
MPP	000628446	LEVER, FUEL CONTROL LINKAGE	MAALAEA 8 - 9	1.00	EA	1,094.63	1,094.63
MPP	000628453	BEARING, BLOCK, PILLOW	INDUSTRIAL DUTY, SELF LOCKING COLLAR	2.00	EA	151.03	302.06
MPP	000628529	PLATE, ORIFICE	FUEL SYSTEM 009-137	46.00	EA	0.00	0.00
MPP	000628537	SHEAVE	GENERATOR VENT FAN, 3 GROOVE	1.00	EA	180.85	180.85
MPP	000628545	BUSHING, TAPERED	GENERATOR VENT FAN, 2-3/8"	1.00	EA	0.00	0.00
MPP	000628594	BUFFER, L.O. PURIFIER, MAB 103B	MAALAEA 15	12.00	EA	13.98	167.79
MPP	000628636	STOP, L.H., FUEL CONTROL LINKAGE	MAALAEA 8 - 9	4.00	EA	0.00	0.00
MPP	000628644	VALVE, RELIEVING, FUEL OIL SUPPLY PUMP	MAALAEA 8 - 9	2.00	EA	576.91	1,153.82
MPP	000628693	HOSE, BRAIDED, FLEXIBLE	WITH FIXED AND FLOATING FLANGES	1.00	EA	0.00	0.00
MPP	000628701	HOSE, BRAIDED, FLEXIBLE	FLOATING FLANGES	1.00	EA	0.00	0.00
MPP	000628719	HOSE, BRAIDED, FLEXIBLE	FLOATING FLANGES	1.00	EA	0.00	0.00
MPP	000628966	INSERTS, SPLINED	FOR BETTIS DS0100	7.00	EA	78.12	546.84
MPP	000628974	STUD, FLYWHEEL	TAP END, 1-3/4 - 12	13.00	EA	46.40	603.26
MPP	000628982	NUT, FLYWHEEL/SHAFT	LSV 93-118	10.00	EA	35.60	355.99
MPP	000628990	NUT, FLYWHEEL/SHAFT	1-3/4 - 12 SELF-LOCKING	22.00	EA	34.70	763.34
MPP	000629030	FUEL LINE	MAALAEA 4 - 5 - 6 - 7	4.00	EA	29.49	117.94
MPP	000629329	FILTER, PRESSURE REGULATOR	13/32" ID, 18/32" OD, 25/32" LENGTH	20.00	EA	23.62	472.36
MPP	000629568	MOTOR	VACUUM COOLING WATER PUMP "B"	1.00	EA	0.00	0.00
MPP	000629576	VALVE, NOX WATER CONTROL-TM40	MAALAEA 14 - 16	1.00	EA	0.00	0.00
MPP	000629584	CONTROLLER, PROCESS	AUTOTUNE PID TEMPERATURE	4.00	EA	238.16	952.64
MPP	000629592	THERMOWELL, 1/2" NPT	7-1/2" INSERTION LENGTH AND A 9 " STEM	4.00	EA	55.12	220.48
MPP	000629600	PROBE, RTD WITH CAST IRON HEAD	3 WIRE CONFIGURATION (STLYE 2)	4.00	EA	93.60	374.40
MPP	000629915	MONITOR, AERODERIVATIVE	MAALAEA 14 - 16	1.00	EA	2,833.15	2,833.15
MPP	000629923	NUT, LOCK	FUEL INJECTOR NOZZLE	18.00	EA	54.68	984.22
MPP	000629931	ROD, PUSH	FUEL INJECTOR NOZZLE	10.00	EA	70.20	702.00
MPP	000629949	SCREW, ADJUST	FUEL INJECTOR NOZZLE	18.00	EA	118.09	2,125.68
MPP	000630111	VALVE, GATE150# CAST STEEL	100F STEAM, 150 BODY WCB, CR 13	1.00	EA	0.00	0.00
MPP	000630186	MINILITE, EZC, CLEAR	MAALAEA 10 - 11	4.00	EA	66.65	266.61
MPP	000630327	SWITCH, DIFFERENTIAL, HIGH PRESSURE	SER 162P, 1 PSID Decrease to 15 PSID	2.00	EA	982.44	1,964.87
MPP	000630418	TIES, CABLE, 8", TY-RAP	1 BAG = 100 EACH	17.00	BG	2.34	39.82
MPP	000630558	RETAINER, ROUND, STARTING AIR CONTROL	MAALAEA 4 - 5 - 6 - 7	1.00	EA	0.00	0.00
MPP	000630566	VALVE, DISC, STARTING AIR CONTROL	MAALAEA 4 - 5 - 6 - 7	1.00	EA	0.00	0.00
MPP	000630574	VALVE, STEM, STARTING AIR CONTROL	MAALAEA 4 - 5 - 6 - 7	1.00	EA	0.00	0.00
MPP	000630608	JOINT, EXPANSION, 4 X 6 - 240 AVNN	M13 JACKET WATER	1.00	EA	0.00	0.00
MPP	000630616	KIT, REPAIR	SCOT PUMP #16 SPEC. 3038K626	1.00	KT	129.16	129.16

NOTE: SOH - Stock on Hand

Source: DARS 3342 Report (as of 5/31/07)

Maui Electric Company, Limited

MATERIALS PHYSICAL INVENTORY
MAALAEA POWER PLANT

WH	STOCK CODE	Item	Description	SOH	Unit	Price/ Unit	Total Cost/ Item
MPP	000630723	IMPELLER, BRONZE	SCOT PUMP #16 SPEC. 3038K626	1.00	EA	0.00	0.00
MPP	000630731	VALVE, ASSY, BODY, MAIN	3-WAY MAGNET VALVE	2.00	EA	576.16	1,152.32
MPP	000630814	TAPE, E FUSING, RED, 1" X 36'		14.00	EA	23.92	334.88
MPP	000630822	PULLEY, BELT	60HZ, WASTE WATER TREATMENT	1.00	EA	0.00	0.00
MPP	000630830	WASHER, SPACING	WASTE WATER TREATMENT	1.00	EA	0.00	0.00
MPP	000630848	COUPLING, NAVE KIT, 60HZ	WASTE WATER TREATMENT	1.00	EA	0.00	0.00
MPP	000630855	COVER	WASTE WATER TREATMENT	1.00	EA	0.00	0.00
MPP	000631119	LEAD, INDIVIDUAL - Ni/Cr	FOR T5.4 HARNESS, 20 FT LENGTH	11.00	EA	327.60	3,603.60
MPP	000631127	LEAD, INDIVIDUAL - NI/AL	FOR T5.4 HARNESS, 20 FT LENGTH	11.00	EA	327.60	3,603.60
MPP	000631135	TRANSMITTER, EXHAUST PRESSURE	MODEL 264DS	1.00	EA	1,664.06	1,664.06
MPP	000631515	LENS, RED, INDICATING LIGHT	MAALAEA 14 - 16 - 17 - 19	10.00	EA	6.64	66.35
MPP	000631523	BLOCKS, CONTACT, (1 NO/NC), 10 AMP	600 VAC	4.00	EA	28.87	115.49
MPP	000631531	LIGHT, INDICATING, TRANSFORMERS 120V	MAALAEA 14 - 16 - 17 - 19	4.00	EA	75.85	303.40
MPP	000631549	LENS, GREEN	FOR INDICATING LIGHT	10.00	EA	6.68	66.77
MPP	000631556	SEAL, U CUP	FOR JOY TWIST AIR COMPRESSOR	4.00	EA	0.00	0.00
MPP	000631564	GASKET, PLATE, COVER	QUINCY AIR COMPRESSOR	9.00	EA	2.99	26.91
MPP	000631572	SEAL, STRIP	COVER ASSY - LP LABYRINTH PACKING	2.00	EA	0.00	0.00
MPP	000631580	O-RING	CURVED TOOTH COUPLING	3.00	EA	0.00	0.00
MPP	000631598	O-RING	CURVED TOOTH COUPLING	8.00	EA	0.00	0.00
MPP	000631606	O-RING	CURVED TOOTH COUPLING	10.00	EA	0.00	0.00
MPP	000631614	O-RING	CURVED TOOTH COUPLING	10.00	EA	0.00	0.00
MPP	000631622	SEAL, STRIP	HP SEAL RING FINAL MACHINING ASSEMBLY	22.00	EA	0.00	0.00
MPP	000631630	SEAL, STRIP	LP SEAL RING FINAL MACHINING ASSEMBLY	0.00	EA	0.00	0.00
MPP	000631648	BUSHING	SERVO MOTOR ASSEMBLY	2.00	EA	0.00	0.00
MPP	000631655	GASKET	SERVO MOTOR ASSEMBLY	1.00	EA	0.00	0.00
MPP	000631663	O-RING	SERVO MOTOR ASSEMBLY	1.00	EA	0.00	0.00
MPP	000631671	GASKET	SERVO MOTOR ASSEMBLY	1.00	EA	0.00	0.00
MPP	000631689	GASKET	SERVO MOTOR ASSEMBLY	0.00	EA	0.00	0.00
MPP	000631820	RESIN, ECODEX-P-303-N	MAALAEA 18	80.00	BG	117.95	9,436.26
MPP	000631838	RING, RETAINING	CASING TURBINE ASSEMBLY	4.00	EA	0.00	0.00
MPP	000631846	RING, RETAINING	CASING TURBINE ASSEMBLY	20.00	EA	0.00	0.00
MPP	000631853	RING, RETAINING	CASING TURBINE ASSEMBLY	4.00	EA	0.00	0.00
MPP	000631861	SCREW, SPECIAL	CASING TURBINE ASSEMBLY	26.00	EA	0.00	0.00
MPP	000631879	SCREW, SPECIAL	CASING TURBINE ASSEMBLY	4.00	EA	0.00	0.00
MPP	000631887	RING, RETAINING	CASING TURBINE ASSEMBLY	2.00	EA	0.00	0.00
MPP	000631895	SEAL, STRIP IN 8 PARTS	DIAPHRAGM PK-438-170 ASSEMBLY	1.00	EA	0.00	0.00
MPP	000631903	SEAL, STRIP IN 8 PARTS	DIAPHRAGM PK-438-170 ASSEMBLY	1.00	EA	0.00	0.00
MPP	000631911	LOCK, STRIP	DIAPHRAGM PK-438-170 ASSEMBLY	1.00	EA	0.00	0.00
MPP	000631929	SEAL, STRIP IN 8 PARTS	DIAPHRAGM PK-438-170 ASSEMBLY	1.00	EA	0.00	0.00
MPP	000631937	LOCK, STRIP	DIAPHRAGM PK-438-170 ASSEMBLY	1.00	EA	0.00	0.00
MPP	000631945	SEAL, STRIP IN 8 PARTS	DIAPHRAGM PK-438-170 ASSEMBLY	1.00	EA	0.00	0.00
MPP	000631952	LOCK, STRIP	DIAPHRAGM PK-438-170 ASSEMBLY	1.00	EA	0.00	0.00
MPP	000631960	SEAL, STRIP IN 8 PARTS	DIAPHRAGM PK-438-170 ASSEMBLY	1.00	EA	0.00	0.00
MPP	000631978	LOCK, STRIP	DIAPHRAGM PK-438-170 ASSEMBLY	1.00	EA	0.00	0.00
MPP	000631986	SEAL, RING	DIAPHRAGM PK-438-170 ASSEMBLY	3.00	EA	0.00	0.00
MPP	000631994	PIN, STOP, SEAL RING	DIAPHRAGM PK-438-170 ASSEMBLY	8.00	EA	0.00	0.00
MPP	000632000	RING, STRETCHING, IN 4 PARTS	NOZZLE ASSEMBLY, P44-K161	1.00	EA	0.00	0.00
MPP	000632018	LOCK, STRIP	NOZZLE ASSEMBLY, P44-K161	1.00	EA	0.00	0.00
MPP	000632026	SEAL, STRIP, IN 12 PARTS	DIAPHRAGM, PK582-285 ASSEMBLY	1.00	EA	0.00	0.00
MPP	000632034	LOCK, STRIP	DIAPHRAGM, PK582-285 ASSEMBLY	1.00	EA	0.00	0.00
MPP	000632042	SEAL, STRIP, IN 12 PARTS	DIAPHRAGM, PK582-405 ASSEMBLY	1.00	EA	0.00	0.00
MPP	000632059	LOCK, STRIP	DIAPHRAGM, PK582-405 ASSEMBLY	1.00	EA	0.00	0.00
MPP	000632067	PIN, STOP, SEAL RING	DIAPHRAGM, PK582-405 ASSEMBLY	4.00	EA	0.00	0.00
MPP	000632075	BUSHING, PISTON VALVE	SERVO-MOTOR ASSEMBLY	2.00	EA	0.00	0.00
MPP	000632083	VALVE, PISTON	SERVO-MOTOR ASSEMBLY	2.00	EA	0.00	0.00
MPP	000632091	BUSHING, PISTON VALVE	SERVO-MOTOR ASSEMBLY	4.00	EA	0.00	0.00
MPP	000632109	PIN, TAPER	HP REGULATING VALVE ASSEMBLY	2.00	EA	0.00	0.00
MPP	000632117	NUT, SPECIAL	HP REGULATING VALVE ASSEMBLY	2.00	EA	0.00	0.00
MPP	000632125	ROD	HP REGULATING VALVE ASSEMBLY	2.00	EA	0.00	0.00
MPP	000632133	SPRING, LOCKWASHER	HP BEARING HOUSING ASSEMBLY	0.00	EA	0.00	0.00
MPP	000632141	SCREW, HEAD, HEX SOCKET	HP BEARING HOUSING ASSEMBLY	8.00	EA	0.00	0.00
MPP	000632158	SEAL, STRIP, IN 6 PARTS	COVER ASSEMBLY, LP LABYRINTH PACKING	2.00	EA	0.00	0.00
MPP	000632166	SEAL, STRIP, IN 8 PARTS	COVER ASSEMBLY, LP LABYRINTH PACKING	2.00	EA	0.00	0.00
MPP	000632174	SEAL, RING	DIAPHRAGM PK582-103 ASSEMBLY	1.00	EA	0.00	0.00

NOTE: SOH - Stock on Hand

Source: DARS 3342 Report (as of 5/31/07)

Maui Electric Company, Limited

MATERIALS PHYSICAL INVENTORY
MAALAEA POWER PLANT

WH	STOCK CODE	Item	Description	SOH	Unit	Price/ Unit	Total Cost/ Item
MPP	000632182	PIN, STOP, SEAL RING	DIAPHRAGM PK582-780 ASSEMBLY	4.00	EA	0.00	0.00
MPP	000632190	SEAL, RING	DIAPHRAGM PK582-780 ASSEMBLY	1.00	EA	0.00	0.00
MPP	000632208	PIN, STOP, SEAR RING	DIAPHRAGM PK582-590 ASSEMBLY	4.00	EA	0.00	0.00
MPP	000632216	LOCK, STRIP	DIAPHRAGM PK582-590 ASSEMBLY	1.00	EA	0.00	0.00
MPP	000632224	SEAL, STRIP, IN 12 PARTS	DIAPHRAGM PK582-590 ASSEMBLY	1.00	EA	0.00	0.00
MPP	000632232	RING, PACKING	TRIP AND THROTTLE VALVE ASSEMBLY	16.00	EA	45.90	734.33
MPP	000632240	ROD, PISTON	SERVO-MOTOR ASSEMBLY	2.00	EA	0.00	0.00
MPP	000632257	BUSHING, GLACIER	SERVO-MOTOR ASSEMBLY	2.00	EA	0.00	0.00
MPP	000632265	RING, SNAP	SERVO-MOTOR ASSEMBLY	2.00	EA	0.00	0.00
MPP	000632273	GASKET, GROOVED	TRIP AND THROTTLE ASSEMBLY	11.00	EA	233.89	2,572.75
MPP	000632281	OIL,TRAFUL, 7W, (1 LITRE)	CAMSHAFT AND ROLLERS	4.00	EA	115.44	461.76
MPP	000632299	COMPOUND, SMOCON, ANTI-SEIZE 1.5kg	MAALAEA 10 - 11 - 12 - 13	2.00	EA	0.00	0.00
MPP	000632315	O-RING	STEAM TURBINE L.O. FILTER SYSTEM	5.00	EA	1.98	9.90
MPP	000632323	O-RING	STEAM TURBINE L.O. FILTER SYSTEM	5.00	EA	1.32	6.61
MPP	000632331	RING, CIRCLIP	STEAM TURBINE L.O. FILTER SYSTEM	5.00	EA	11.82	59.12
MPP	000632349	RING, CIRCLIP	STEAM TURBINE L.O. FILTER SYSTEM	5.00	EA	8.43	42.17
MPP	000632356	T/C ASSEMBLY W/TRANS JOINT	MAALAEA 15	1.00	EA	0.00	0.00
MPP	000632562	RESIN, CATION, SAMPLING STATION	MAALAEA 18	20.00	LB	22.88	457.60
MPP	000632695	HOSE, ASSEMBLY	HYDRAULIC STARTER OIL RETURN LINE	1.00	EA	0.00	0.00
MPP	000632828	ELEMENT, FILTER, OIL, PALL-TRINITY	MAALAEA 18	4.00	EA	242.69	970.77
MPP	000632836	ELEMENT, FILTER, OIL, PALL-TRINITY	MAALAEA 18	4.00	EA	720.79	2,883.15
MPP	000632844	JOINT, EXPANSION	FOR T/C INLET PIPE	1.00	EA	3,536.00	3,536.00
MPP	000632869	VALVE, HENRION SOLENOID,	TYPE 8440626.4801	1.00	EA	4,747.60	4,747.60
MPP	000632877	COUPLING, POSITIVE, L.O. PUMP	MAALAEA 4 - 5 - 6 - 7	1.00	EA	0.00	0.00
MPP	000633040	KIT, GLASS GAGE	REFLEX TEMPERED BOROSILICATE GLASS	8.00	EA	0.00	0.00
MPP	000633057	TRANSMITTER, PRO SERIES	PH/ORP W/WALL/PIPE/INT.MN	2.00	EA	249.60	499.20
MPP	000633073	GASKET, KIT,	ESV-IP-NL, S/N# W13FFVNP-1594	2.00	EA	382.57	765.14
MPP	000633081	PLATE, PORT, OUTER	ESV-IP-NL, S/N# W13FFVNP-1594	3.00	EA	1,822.22	5,466.65
MPP	000633099	GAUGE, PRESURE, SERIES 2000 MAGNEHELIC	INCHES OF WATER - 0 - 10"	2.00	EA	0.00	0.00
MPP	000633230	O-RING, LUBE OIL FILTER	MAALAEA 14 - 16	9.00	EA	0.00	0.00
MPP	000633297	PROBE, T3, ASSEMBLY #682L359G02	MAALAEA 17 - 19	1.00	EA	0.00	0.00
MPP	000633305	RELAY, TIMER, OMRON, 120VAC	TIME DELAY ON, TIME DELAY CONTACTS	2.00	EA	106.52	213.03
MPP	000633578	SHAFT, ASSEMBLY, EXCH ROCKER	MAALAEA 1 - 2 - 3 - X1 - X2	0.00	KT	0.00	0.00
MPP	000633586	SCREW	SPLIT CAM US CONTENT, FUEL SYSTEM	30.00	EA	0.00	0.00
MPP	000633594	VALVE, SAFETY	300# RF INLET X 4", 150# RF OUTLET	0.00	EA	0.00	0.00
MPP	000633602	VALVE, SAFETY	1500# RF INLET X 6", 150# RF OUTLET	1.00	EA	0.00	0.00
MPP	000633610	VALVE, SAFETY	1500# RF INLET X 6", 150# RF OUTLET	0.00	EA	0.00	0.00
MPP	000633628	VALVE, SAFETY	300# RF INLET X 3", 150# RF OUTLET	1.00	EA	0.00	0.00
MPP	000633644	BOLT, SMALL	STUD FOUNDATION	7.00	EA	379.34	2,655.38
MPP	000633651	BOLT, LARGE	STUD FOUNDATION	8.00	EA	383.47	3,067.72
MPP	000633719	CLAMP, LOOP, 1.062 INCH TUBE DIA.	MAALAEA 14 - 16 - 17 - 19	10.00	EA	1.31	13.10
MPP	000633727	SPARK PLUG, CHAMPION	CHP UNIT	12.00	EA	38.65	463.76
MPP	000633735	FILTER, BALDWIN, CHAMPION	CHP UNIT	12.00	EA	18.20	218.40
MPP	000633875	MUFFLER, HIGH-FLOW EXHAUST	ALUMINUM, MALE, 595 MAX SCFM	6.00	EA	0.00	0.00
MPP	000633883	FILTER, AIR, DONALDSON	CHP UNIT	6.00	EA	50.80	304.82
MPP	000633891	BEARING, BALL	MACC, 380770	6.00	EA	0.00	0.00
MPP	000633909	BEARING, BALL	MACC, 3544369	6.00	EA	0.00	0.00
MPP	000633917	SEAL	RWDR-KOMBI	6.00	EA	0.00	0.00
MPP	000633925	INSERT, SPIDER, KTR	MAALAEA 18	2.00	EA	0.00	0.00
MPP	000633933	COUPLING, HUB, KTR	MACC	2.00	EA	0.00	0.00
MPP	000633941	LAMP, 32W, T8, SYLVANIA	MAALAEA 10 - 11 - 12 - 13 - 14	60.00	CS	1.86	111.87
MPP	000633958	COUPLING, HUB, SF FLANGE	MACC	2.00	EA	0.00	0.00
MPP	000633966	SWITCH, VIBRATION, MURPHY	MAALAEA 18	2.00	EA	0.00	0.00
MPP	000633974	BEARING, BALL, DBL SHIELD	MACC, A-7812R-60, 9111241	6.00	EA	0.00	0.00
MPP	000633982	COUPLING, HUB, SF FLANGE	MACC, CP-3876	2.00	EA	0.00	0.00
MPP	000633990	INSERT, CPLG WOODS EPDM11	SF SLEEVE, MACC, CP-3277	2.00	EA	0.00	0.00
MPP	000634006	BEARING, TAPER	MACC, PU-18077	2.00	EA	0.00	0.00
MPP	000634014	BEARING, ROLLER	MACC, PU11741	2.00	EA	0.00	0.00
MPP	000634022	SEAL, PACKING	MACC, PK-2470, 5RGS/SET	2.00	ST	0.00	0.00
MPP	000634030	BEARING, BALL, DBL SHIELD	MACC, A-7812R-55	6.00	EA	0.00	0.00
MPP	000634048	BEARING, BALL	MACC, 3544366	6.00	EA	0.00	0.00
MPP	000634055	BEARING, BALL	MACC, 380771	6.00	EA	0.00	0.00
MPP	000634071	PACKING, ROCKER ARM	MAALAEA 10 - 11 - 12 - 13	3.00	EA	0.00	0.00
MPP	000634089	PACKING, ROCKER ARM	MAALAEA 10 - 11 - 12 - 13	9.00	EA	0.00	0.00
MPP	000634097	NEEDLE VALVE SEAT, ROCKER ARM	MAALAEA 10 - 11 - 12 - 13	4.00	EA	0.00	0.00
MPP	000634105	NUT, JAM, ROCKER ARM	MAALAEA 10 - 11 - 12 - 13	4.00	EA	0.00	0.00

NOTE: SOH - Stock on Hand

Source: DARS 3342 Report (as of 5/31/07)

Maui Electric Company, Limited

MATERIALS PHYSICAL INVENTORY
MAALAEA POWER PLANT

WH	STOCK CODE	Item	Description	SOH	Unit	Price/ Unit	Total Cost/ Item
MPP	000634113	NEEDLE VALVE, ROCKER ARM	MAALAEA 10 - 11 - 12 - 13	4.00	EA	0.00	0.00
MPP	000634121	BOLT, STUD	MAALAEA 10 - 11 - 12 - 13	60.00	EA	0.00	0.00
MPP	000634139	BOLT, INJECTOR STUD	MAALAEA 10 - 11 - 12 - 13	6.00	EA	0.00	0.00
MPP	000634287	FUSE, GOULD/SHAWMUT, 200A	M18, PANEL, PLUP-PNL1B	4.00	EA	0.00	0.00
MPP	000634295	FUSE, BUSSMANN, 15A, 600 VAC	M18, 480V SWITCHGEAR	10.00	EA	0.00	0.00
MPP	000634303	FUSE, BUSS, 10A, 600 VAC	M18, 480V SWITCHGEAR	10.00	EA	0.00	0.00
MPP	000634311	FUSE, BUSSMANN, 10A, 250 VAC	M18, 480V SWITCHGEAR	10.00	EA	0.00	0.00
MPP	000634329	FUSE, BUSS, 6A, 600 VAC	M18, 480V SWITCHGEAR	10.00	EA	0.00	0.00
MPP	000634337	LAMP, C3 CONTROLS, HIGH THRESHOLD, RED	MAALAEA 18	10.00	EA	0.00	0.00
MPP	000634345	LAMP, C3 CONTROLS, HIGH THRESHOLD, GRN	52G-18 SWGR	10.00	EA	0.00	0.00
MPP	000634352	FUSE, BUSSMANN, 20A, 52G-18 SWGR	M18, 480V SWITCHGEAR	10.00	EA	0.00	0.00
MPP	000634360	FUSE, BUSSMANN, 6A, 250 VAC, PRIMARY CLF	52G-18 SWGR	10.00	EA	0.00	0.00
MPP	000634378	FUSE, BUSSMANN, 1A, 250 VAC, PRIMARY CLF	52G-18 SWGR	10.00	EA	0.00	0.00
MPP	000634386	FUSE, BRUSH 15KV, .5E, PRIMARY CLF	52G-18 SWGR	4.00	EA	0.00	0.00
MPP	000634394	BOLT, HEX, TRIP & THROTTLE	MAALAEA 15	1.00	EA	0.00	0.00
MPP	000634402	NUT, HEX, TRIP & THROTTLE	MAALAEA 15	1.00	EA	0.00	0.00
MPP	000634410	ANALYZER, ROSEMOUNT, CONDUCTIVITY	DUAL CHANNEL, BOILER SAMPLE ROOM	1.00	EA	1,067.64	1,067.64
MPP	000634428	CELL, CONDUCTIVITY, ROSEMOUNT, BOILER	SAMPLE ROOM, K=0.01	1.00	EA	548.92	548.92
MPP	000634436	PROBE, PH 320 WITH BNC, ROSEMOUNT	BOILER SAMPLE ROOM	1.00	EA	278.63	278.63
MPP	000634444	SHIM	BETWEEN JACKET SUPPORT AND ENGINE	5.00	EA	0.00	0.00
MPP	000634451	MOTOR, RELIANCE, HP 20, FRAME, 324T	RPM, 880, TEFC, 460 VOLTS, 3 PHASE	1.00	EA	2,747.00	2,747.00
MPP	000634543	VALVE, PRESSURE RELIEF	MAALAEA 14 - 16	1.00	EA	0.00	0.00
MPP	000634550	GASKET, HYDRAULIC PUMP	MAALAEA 14 - 16	5.00	EA	0.00	0.00
MPP	000634568	SEAL, RETAINER	MAALAEA 14 - 16 - 17 - 19	5.00	EA	0.00	0.00
MPP	000634576	VALVE, OTSG LP STEAM MOV50	MAALARA 18	1.00	EA	0.00	0.00
MPP	000634816	SHIM	BETWEEN JACKET AND ENJINE SUPPORT	5.00	EA	0.00	0.00
MPP	000634824	GEAR, IDLER AND SHAFT	MAALAEA 14 - 16	0.00	EA	0.00	0.00
MPP	000634832	GEAR, DRIVE AND SHAFT	MAALAEA 14 - 16	0.00	EA	0.00	0.00
MPP	000634915	PIN, HINGE (CONN ROD 404)	MAALAEA 10 - 11 - 12 - 13	0.00	EA	0.00	0.00
MPP	000634923	COUPLING	MAALAEA 10 - 11	2.00	EA	0.00	0.00
MPP	000634931	VALVE, RELIEF (COMPRESSOR HEAD)	MAALAEA 4 - 5 - 6 - 7 - 8 - 9	1.00	EA	0.00	0.00
MPP	000634964	ELBOW	BRASS, CYLINDER HEAD WATER CONNECTOR	3.00	EA	38.57	115.72
MPP	000635169	PACKING	EXHAUST ELBOW, G512629	4.00	EA	0.00	0.00
MPP	000635177	CYLINDER, AIR	FIRE DAMPER ADAPTOR	0.00	EA	0.00	0.00
MPP	000635185	CYLINDER, AIR	FIRE DAMPER ADAPTOR	0.00	EA	0.00	0.00
MPP	000635193	CYLINDER, AIR	FIRE DAMPER ADAPTOR	0.00	EA	0.00	0.00
MPP	000635201	SCREW	PRESSURE, MAIN FRAME 001	1.00	EA	498.42	498.42
MPP	000635219	KIT, SEAL	FOR AIR CYLINDER CG1EA50SR-S4902-150	0.00	KT	0.00	0.00
MPP	000635227	KIT, SEAL	FOR AIR CYLINDER CG1EA40SV-S4954-450 AND	0.00	KT	0.00	0.00
MPP	000635250	JOINT, EXPANSION	4" X 5" PROCO, JACKET WATER	0.00	EA	0.00	0.00

NOTE: SOH - Stock on Hand

Source: DARS 3342 Report (as of 5/31/07)

CA-IR-196 **Ref: T-18, page 9, Distribution Facilities – Customer Component.**

Please provide the following information:

a. Detailed calculations associated with the minimum system and/or zero intercept studies that were relied upon to determine the portion of distribution facilities classified as customer-related in the Company's cost of service study.
b. Describe the minimum sized distribution pole that was used by MECO to determine its customer component weighting for the distribution poles account.
c. Explain whether any poles shorter than the assumed minimum sized pose have been installed by MECO since 1982.
d. Provide a complete statement of MECO's policy with regard to distribution pole placement and sizing, under representative frequently encountered typical conditions of pole initial installation or replacement.
e. If the response to part (c) of this information request is affirmative, please provide the dates and numbers of such pole installations.
f. What approximate percentage of pole installations in a representative year are replacements of existing poles, rather than new pole line construction.
g. Describe the assumed minimum sized facility for OH primary and OH secondary conductor.
h. Provide a complete statement of MECO's policy with regard to distribution overhead primary conductor placement and sizing, under representative frequently encountered typical conditions of overhead pole line initial installation or replacement.
i. Provide a complete statement of MECO's policy with regard to distribution overhead secondary conductor placement and sizing, under representative frequently encountered typical conditions of overhead pole line initial installation or replacement.
j. Approximately how many individual residential customers within single family detached homes, using average test year demand levels of single phase service, could be served by the specified minimum system primary overhead conductor?
k. Approximately how many individual residential customers within separately metered apartments, using average test year demand levels of single phase service, could be served by the specified primary overhead conductor?
l. Approximately how many individual residential customers within single family detached homes, using average test year demand levels of single phase service, could be served by the specified minimum system secondary overhead conductor?
m. Approximately how many individual residential customers within separately metered apartments, using average test year demand levels of single phase service, could be served by the specified secondary overhead conductor?
n. Describe the minimum sized underground primary and secondary conductor that was used by MECO to determine its customer component weighting for the underground conductors.
o. Provide a complete statement of MECO's policy with regard to underground primary and secondary conductor placement and sizing, under representative frequently encountered typical conditions of pole initial installation or replacement.
p. Approximately how many individual residential customers within single family detached homes, using average test year demand levels of single phase service, could be served by the specified minimum-sized underground primary conductor?

q. Approximately how many individual residential customers within separately metered apartments, using average test year demand levels of single phase service, could be served by the specified minimum-sized underground primary conductor?
r. Approximately how many individual residential customers within single family detached homes, using average test year demand levels of single phase service, could be served by the specified minimum-sized underground secondary underground secondary conductor?
s. Approximately how many individual residential customers within separately metered apartments, using average test year demand levels of single phase service, could be served by the specified minimum-sized underground secondary conductor?
t. Describe the minimum sized overhead and padmount distribution transformer that was used by MECO to determine its customer component weighting for the underground conductors.
u. Provide a complete statement of MECO's policy with regard to distribution transformer placement and sizing, under representative frequently encountered typical conditions of initial installation or replacement.
v. Approximately how many individual residential customers within single family detached homes, using average test year demand levels of single phase service, could be served by the specified minimum-sized overhead transformer?
w. Approximately how many individual residential customers within single family detached homes, using average test year demand levels of single phase service, could be served by a the specified minimum-sized padmount transformer?
x. Has MECO installed any transformers smaller than the specified minimum-sized overhead or padmount transformers since 1984?
y. If your response to part (x) of this information request is affirmative, please provide detailed information by vintage year of installed units and costs for each category of installations (overhead, padmount, 1/3 phase).
z. If your response to part (x) of this information request is affirmative, please explain why smaller sized transformers were <u>not</u> used as part of the Company's assumed minimum sized system.

<u>MECO Response:</u>

a. The Company used the minimum system and zero-intercept calculations that were used in MECO's last rate case, Docket No. 97-0346, due to other commitments in other matters before the Commission. However, this cost allocation method has been approved in past MECO, HELCO, and HECO rate cases, and the Company believes that these allocation factors are reasonable to use in this case. The supporting calculations are provided in pages 7 to 88 of this response.

b. The minimum size pole used in this analysis is 30 feet for Maui and Lanai divisions and 25 feet for Molokai division.

c. There have been none.

d. See MECO's response to CA-IR-195.

e. Not applicable.

f. We are unable to provide an answer. The plant accounting system does track pole installations, but does not distinguish between new pole placements and replacement of existing poles.

g. The assumed minimum sized facilities are 245 amps for overhead primary conductor and 100 amps for overhead secondary conductor, respectively.

h. See MECO's response to CA-IR-195.

i. See MECO's response to CA-IR-195.

j. Approximately 299 Maui residential customers with average test year demand of 5.0 kW can be served by the minimum system primary overhead conductor. Approximately 384 Lanai residential customers with average test year demand of 3.9 kW can be served by the minimum system primary overhead conductor. Approximately 499 Molokai residential customers with average test year demand of 3.0 kW can be served by the minimum system primary overhead conductor.

k. Approximately 299 Maui residential customers with average test year demand of 5.0 kW can be served by the minimum system primary overhead conductor. Approximately 384 Lanai residential customers with average test year demand of 3.9 kW can be served by the minimum system primary overhead conductor. Approximately 499 Molokai residential

customers with average test year demand of 3.0 kW can be served by the minimum system primary overhead conductor.

l. Approximately 4 Maui residential customers with average test year demand of 5.0 kW can be served by the minimum system secondary overhead conductor. Approximately 6 Lanai residential customers with average test year demand of 3.9 kW can be served by the minimum system secondary overhead conductor. Approximately 8 Molokai residential customers with average test year demand of 3.0 kW can be served by the minimum system secondary overhead conductor.

m. Approximately 4 Maui residential customers with average test year demand of 5.0 kW can be served by the minimum system secondary overhead conductor. Approximately 6 Lanai residential customers with average test year demand of 3.9 kW can be served by the minimum system secondary overhead conductor. Approximately 8 Molokai residential customers with average test year demand of 3.0 kW can be served by the minimum system secondary overhead conductor.

n. The assumed minimum sized facilities are 118 amps for underground primary conductor and 111 amps for underground secondary conductor, respectively.

o. See MECO's response to CA-IR-195.

p. Approximately 140 Maui residential customers with average test year demand of 5.0 kW can be served by the minimum system underground primary conductor. Approximately 180 Lanai residential customers with average test year demand of 3.9 kW can be served by the minimum system underground primary conductor. Approximately 234 Molokai residential customers with average test year demand of 3.0 kW can be served by the minimum system underground primary conductor.

q. Approximately 140 Maui residential customers with average test year demand of 5.0 kW can be served by the minimum system underground primary conductor. Approximately 180 Lanai residential customers with average test year demand of 3.9 kW can be served by the minimum system underground primary conductor. Approximately 234 Molokai residential customers with average test year demand of 3.0 kW can be served by the minimum system underground primary conductor.

r. Approximately 4 Maui residential customers with average test year demand of 5.0 kW can be served by the minimum system underground secondary conductor. Approximately 5 Lanai residential customers with average test year demand of 3.9 kW can be served by the minimum system underground secondary conductor. Approximately 7 Molokai residential customers with average test year demand of 3.0 kW can be served by the minimum system underground secondary conductor.

s. Approximately 4 Maui residential customers with average test year demand of 5.0 kW can be served by the minimum system underground secondary conductor. Approximately 5 Lanai residential customers with average test year demand of 3.9 kW can be served by the minimum system underground secondary conductor. Approximately 7 Molokai residential customers with average test year demand of 3.0 kW can be served by the minimum system underground secondary conductor.

t. The assumed minimum sized facilities are 10 kva for overhead transformer and 25 kva for padmount transformer, respectively.

u. See MECO's response to CA-IR-195.

v. Approximately 1 Maui residential customer with average test year demand of 5.0 kW can be served by the minimum system overhead transformer. Approximately 2 Lanai residential

customers with average test year demand of 3.9 kW can be served by the minimum system overhead transformer. Approximately 2 Molokai residential customers with average test year demand of 3.0 kW can be served by the minimum system overhead transformer.

w. Approximately 4 Maui residential customers with average test year demand of 5.0 kW can be served by the minimum system padmount transformer. Approximately 5 Lanai residential customers with average test year demand of 3.9 kW can be served by the minimum system padmount transformer. Approximately 7 Molokai residential customers with average test year demand of 3.0 kW can be served by the minimum system padmount transformer.

x. No, based on the available data.

y. Not applicable.

z. Not applicable.

MECO: SUMMARY OF SELECTED DISTRIBUTION POLES
DATA PERIOD = 1982 - 1994

SIZE (FT.)	INSTALLED QUANTITY (NO.)	INSTALLED COST ($)	REPLACEMENT COST ($)	AVE COSTS INSTALLED ($/POLE)	AVE COSTS REPLACED ($/POLE)
30	1,839	746,469	924,036	405.91	502.47
35	304	252,321	298,669	830.00	982.46
40	2,194	2,516,880	3,074,946	1,147.16	1,401.52
45	956	1,591,234	1,908,793	1,664.47	1,996.65
50	185	367,432	441,072	1,986.12	2,384.17
TOTALS AND AVERAGES	5,478	5,474,336	6,647,516	999.33	1,213.49

CUSTOMER COMPONENT, MIN. SIZE METHOD (%) = 40.62 41.41

MAUI POLES

MPOLES LISTING - MAUI - POLES

I = 1-11-95

MECO COST ANALYSIS FOR DISTRIBUTION POLE SIZE = 30 FT

	H-W COST INDEX		INSTALLED		REPLACEMENT	UNIT COSTS	
		BASE=	QUANTITY	COST	COST	INSTALLED	REPLACED
YEAR	INDEX	1994	(NO.)	($)	($)	($/POLE)	($/POLE)
1982	263	1.33	116	59,703	79,453	514.68	684.94
1983	265	1.32	111	52,940	69,921	476.94	629.92
1984	267	1.31	103	70,674	92,644	686.16	899.45
1985	262	1.34	126	71,394	95,374	566.62	756.93
1986	264	1.33	167	78,823	104,500	471.99	625.75
1987	265	1.32	152	38,343	50,642	252.26	333.17
1988	276	1.27	186	52,860	67,033	284.19	360.39
1989	285	1.23	280	97,519	119,760	348.28	427.71
1990	294	1.19	150	42,379	50,451	282.53	336.34
1991	308	1.14	136	41,638	47,316	306.16	347.91
1992	323	1.08	113	49,002	53,098	433.65	469.90
1993	331	1.06	99	46,194	48,846	466.61	493.39
1994	350	1.00	100	45,000	45,000	450.00	450.00
TOTAL	FOR 13	YEARS	1839	746,469	924,036	405.91	502.47

MECO COST ANALYSIS FOR DISTRIBUTION POLE SIZE = 35 FT

	H-W COST INDEX		INSTALLED		REPLACEMENT	UNIT COSTS	
		BASE=	QUANTITY	COST	COST	INSTALLED	REPLACED
YEAR	INDEX	1994	(NO.)	($)	($)	($/POLE)	($/POLE)
1982	263	1.33	10	9,409	12,521	940.90	1,252.15
1983	265	1.32	21	13,668	18,052	650.86	859.62
1984	267	1.31	26	24,203	31,727	930.88	1,220.26
1985	262	1.34	28	19,414	25,935	693.36	926.24
1986	264	1.33	31	24,094	31,943	777.23	1,030.41
1987	265	1.32	17	8,506	11,234	500.35	660.84
1988	276	1.27	23	13,316	16,886	578.96	734.18
1989	285	1.23	22	12,944	15,896	588.36	722.55
1990	294	1.19	12	7,159	8,523	596.58	710.22
1991	308	1.14	16	10,192	11,582	637.00	723.86
1992	323	1.08	34	28,240	30,601	830.59	900.02
1993	331	1.06	34	45,176	47,769	1,328.71	1,404.98
1994	350	1.00	30	36,000	36,000	1,200.00	1,200.00
TOTAL FOR 13 YEARS			304	252,321	298,669	830.00	982.46

MECO COST ANALYSIS FOR DISTRIBUTION POLE SIZE = 40 FT

	H-W COST INDEX		INSTALLED		REPLACEMENT	UNIT COSTS	
		BASE-	QUANTITY	COST	COST	INSTALLED	REPLACED
YEAR	INDEX	1994	(NO.)	($)	($)	($/POLE)	($/POLE)
1982	263	1.33	127	169,071	224,999	1,331.27	1,771.65
1983	265	1.32	111	146,615	378,553	1,291.08	1,705.20
1984	267	1.31	134	216,913	284,343	1,618.75	2,121.96
1985	262	1.34	120	186,611	249,290	1,555.09	2,077.41
1986	264	1.33	180	192,770	255,566	1,070.94	1,419.81
1987	265	1.32	168	168,559	222,625	1,003.33	1,325.15
1988	276	1.27	128	107,828	136,738	842.41	1,068.27
1989	285	1.23	307	276,767	339,889	901.52	1,107.13
1990	294	1.19	136	122,071	145,323	897.58	1,068.55
1991	308	1.14	128	128,283	145,776	1,002.21	1,138.88
1992	323	1.08	183	206,381	223,633	1,127.77	1,222.04
1993	331	1.06	181	230,007	243,210	1,270.76	1,343.70
1994	350	1.00	180	225,000	225,000	1,250.00	1,250.00
TOTAL	FOR 13	YEARS	2194	2,516,880	3,074,946	1,147.16	1,401.52

MECO COST ANALYSIS FOR DISTRIBUTION POLE SIZE = 45 FT

	H-W COST INDEX		INSTALLED		REPLACEMENT	UNIT COSTS	
		BASE=	QUANTITY	COST	COST	INSTALLED	REPLACED
YEAR	INDEX	1994	(NO.)	($)	($)	($/POLE)	($/POLE)
1982	263	1.33	29	64,070	85,264	2,209.31	2,940.15
1983	265	1.32	56	101,231	133,701	1,745.36	2,305.20
1984	267	1.31	50	96,691	126,749	1,933.82	2,534.97
1985	262	1.34	67	118,536	158,350	1,769.19	2,363.43
1986	264	1.33	87	173,445	229,946	1,993.62	2,643.06
1987	265	1.32	58	69,574	91,890	1,199.55	1,584.31
1988	276	1.27	90	107,890	136,817	1,198.78	1,520.19
1989	285	1.23	74	89,260	109,618	1,206.22	1,481.32
1990	294	1.19	105	125,866	149,840	1,198.72	1,427.05
1991	308	1.14	64	118,968	135,191	1,858.88	2,112.36
1992	323	1.08	103	204,790	221,909	1,988.25	2,154.45
1993	331	1.06	81	149,913	158,518	1,850.78	1,957.02
1994	350	1.00	90	171,000	171,000	1,900.00	1,900.00
TOTAL	FOR 13	YEARS	956	1,591,234	1,908,793	1,664.47	1,996.65

MECO COST ANALYSIS FOR DISTRIBUTION POLE SIZE = 50 FT

	H-W COST INDEX		INSTALLED		REPLACEMENT	UNIT COSTS	
		BASE=	QUANTITY	COST	COST	INSTALLED	REPLACED
YEAR	INDEX	1994	(NO.)	($)	($)	($/POLE)	($/POLE)
1982	263	1.33	8	21,642	28,801	2,705.25	3,600.14
1983	265	1.32	8	14,910	19,692	1,863.75	2,461.56
1984	267	1.31	12	27,938	36,623	2,328.17	3,051.90
1985	262	1.34	8	16,588	22,160	2,073.50	2,769.94
1986	264	1.33	8	18,757	24,867	2,344.63	3,108.40
1987	265	1.32	20	30,325	40,052	1,516.25	2,002.59
1988	276	1.27	29	44,672	56,649	1,540.41	1,953.42
1989	285	1.23	21	30,601	37,580	1,457.19	1,789.53
1990	294	1.19	14	20,401	24,287	1,457.21	1,734.78
1991	308	1.14	8	18,158	20,634	2,269.75	2,579.26
1992	323	1.08	17	51,687	56,008	3,040.41	3,294.56
1993	331	1.06	17	34,253	36,219	2,014.88	2,130.54
1994	350	1.00	15	37,500	37,500	2,500.00	2,500.00
TOTAL FOR 13 YEARS			185	367,432	441,072	1,986.12	2,384.17

MECO: SUMMARY OF DISTRIBUTION POLES
DATA PERIOD = 1982 - 1994

SIZE (FT.)	INSTALLED QUANTITY (NO.)	INSTALLED COST ($)	REPLACEMENT COST ($)	AVE COSTS INSTALLED ($/POLE)	AVE COSTS REPLACED ($/POLE)
30	23	15,307	17,253	665.52	750.11
40	72	106,287	129,108	1,476.21	1,793.16
45	161	275,102	316,508	1,708.71	1,965.89
TOTALS AND AVERAGES	256	396,696	462,868	1,549.59	1,808.08

CUSTOMER COMPONENT, MIN. SIZE METHOD (%) = 42.95 (41.49)

LANAI POLES

LPOLES LISTING - LANAI - POLES

ES 1-16-96

MECO COST ANALYSIS FOR DISTRIBUTION POLE SIZE = 30 FT

	H-W COST INDEX		INSTALLED		REPLACEMENT	UNIT COSTS	
		BASE=	QUANTITY	COST	COST	INSTALLED	REPLACED
YEAR	INDEX	1994	(NO.)	($)	($)	($/POLE)	($/POLE)
1982	263	1.33	2	844	1,123	422.00	561.60
1983	265	1.32	0	0	0	.	.
1984	267	1.31	3	2,218	2,907	739.33	969.16
1985	262	1.34	0	0	0	.	.
1986	264	1.33	0	0	0	.	.
1987	265	1.32	0	0	0	.	.
1988	276	1.27	0	0	0	.	.
1989	285	1.23	2	1,300	1,596	650.00	798.25
1990	294	1.19	2	1,324	1,576	662.00	788.10
1991	308	1.14	0	0	0	.	.
1992	323	1.08	3	2,504	2,713	834.67	904.44
1993	331	1.06	6	3,812	4,031	635.33	671.80
1994	350	1.00	5	3,305	3,305	661.00	661.00
TOTAL FOR 13 YEARS			23	15,307	17,252	665.52	750.11

MECO COST ANALYSIS FOR DISTRIBUTION POLE SIZE = 40 FT

	H-W COST INDEX		INSTALLED		REPLACEMENT	UNIT COSTS	
		BASE=	QUANTITY	COST	COST	INSTALLED	REPLACED
YEAR	INDEX	1994	(NO.)	($)	($)	($/POLE)	($/POLE)
1982	263	1.33	1	1,160	1,544	1,160.00	1,543.73
1983	265	1.32	0	0	0	.	.
1984	267	1.31	4	7,423	9,731	1,855.75	2,432.63
1985	262	1.34	0	0	0	.	.
1986	264	1.33	0	0	0	.	.
1987	265	1.32	0	0	0	.	.
1988	276	1.27	9	8,081	10,248	897.89	1,138.63
1989	285	1.23	40	56,805	69,761	1,420.13	1,744.01
1990	294	1.19	10	22,270	26,512	2,227.00	2,651.19
1991	308	1.14	3	3,703	4,208	1,234.33	1,402.65
1992	323	1.08	1	1,223	1,325	1,223.00	1,325.23
1993	331	1.06	2	2,756	2,914	1,378.00	1,457.10
1994	350	1.00	2	2,866	2,866	1,433.00	1,433.00
TOTAL	FOR 13	YEARS	72	106,287	129,108	1,476.21	1,793.16

MECO COST ANALYSIS FOR DISTRIBUTION POLE SIZE = 45 FT

	H-W COST INDEX		INSTALLED		REPLACEMENT	UNIT COSTS	
		BASE=	QUANTITY	COST	COST	INSTALLED	REPLACED
YEAR	INDEX	1994	(NO.)	($)	($)	($/POLE)	($/POLE)
1982	263	1.33	1	664	884	664.00	883.65
1983	265	1.32	0	0	0	.	.
1984	267	1.31	0	0	0	.	.
1985	262	1.34	0	0	0	.	.
1986	264	1.33	0	0	0	.	.
1987	265	1.32	0	0	0	.	.
1988	276	1.27	49	74,109	93,979	1,512.43	1,917.93
1989	285	1.23	28	48,239	59,241	1,722.82	2,115.75
1990	294	1.19	7	9,842	11,717	1,406.00	1,673.81
1991	308	1.14	11	19,911	22,626	1,810.09	2,056.92
1992	323	1.08	15	31,754	34,408	2,116.93	2,293.89
1993	331	1.06	30	53,494	56,565	1,783.13	1,885.49
1994	350	1.00	20	37,089	37,089	1,854.45	1,854.45
TOTAL FOR 13 YEARS			161	275,102	316,508	1,708.71	1,965.89
OVERALL TOTAL			256	396,696	462,868	1,549.59	1,808.08

MECO: SUMMARY OF DISTRIBUTION POLES
DATA PERIOD = 1980 - 1994

SIZE (FT.)	INSTALLED QUANTITY (NO.)	INSTALLED COST ($)	REPLACEMENT COST ($)	AVE COSTS INSTALLED ($/POLE)	AVE COSTS REPLACED ($/POLE)
25	11	3,171	4,327	288.27	393.33
30	174	82,291	102,029	472.94	586.37
35	112	75,569	102,976	674.72	919.43
40	382	306,283	390,255	801.79	1,021.61
45	36	40,997	48,372	1,138.81	1,343.65
50	2	3,566	3,666	1,783.00	1,833.17
55	86	79,805	115,058	927.97	1,337.88
TOTALS AND AVERAGES	803	591,682	766,683	736.84	954.77

CUSTOMER COMPONENT, MIN. SIZE METHOD (%) = 39.12 (41.20)

MOLOKAI POLES

MOPOLES LISTING - MOLOKAI POLES Es 1-16-95

MECO COST ANALYSIS FOR DISTRIBUTION POLE SIZE = 25 FT

YEAR	H-W COST INDEX INDEX	BASE= 1994	INSTALLED QUANTITY (NO.)	COST ($)	REPLACEMENT COST ($)	UNIT COSTS INSTALLED ($/POLE)	REPLACED ($/POLE)
1980	219	1.60	2	424	678	212.00	338.81
1981	241	1.45	0	0	0	.	.
1982	263	1.33	7	2,082	2,771	297.43	395.82
1983	265	1.32	2	665	878	332.50	439.15
1984	267	1.31	0	0	0	.	.
1985	262	1.34	0	0	0	.	.
1986	264	1.33	0	0	0	.	.
1987	265	1.32	0	0	0	.	.
1988	276	1.27	0	0	0	.	.
1989	285	1.23	0	0	0	.	.
TOTAL FOR 10 YEARS			11	3,171	4,327	288.27	393.33

MECO COST ANALYSIS FOR DISTRIBUTION POLE SIZE = 30 FT

	H-W COST INDEX		INSTALLED		REPLACEMENT	UNIT COSTS	
		BASE=	QUANTITY	COST	COST	INSTALLED	REPLACED
YEAR	INDEX	1994	(NO.)	($)	($)	($/POLE)	($/POLE)
1980	219	1.60	20	4,115	6,576	205.75	328.82
1981	241	1.45	5	1,079	1,567	215.80	313.40
1982	263	1.33	10	2,270	3,021	227.00	302.09
1983	265	1.32	3	1,451	1,916	483.67	638.81
1984	267	1.31	9	3,141	4,117	349.00	457.49
1985	262	1.34	7	2,322	3,102	331.71	443.13
1986	264	1.33	13	3,663	4,856	281.77	373.56
1987	265	1.32	12	27,142	35,848	2,261.83	2,987.33
1988	276	1.27	9	3,197	4,054	355.22	450.46
1989	285	1.23	6	2,062	2,532	343.67	422.05
1990	294	1.19	14	5,430	6,464	387.86	461.73
1991	308	1.14	13	5,200	5,909	400.00	454.55
1992	323	1.08	11	5,513	5,974	501.18	543.08
1993	331	1.06	22	6,706	7,091	304.82	322.32
1994	350	1.00	20	9,000	9,000	450.00	450.00
TOTAL FOR 15 YEARS			174	82,291	102,029	472.94	586.37

MECO COST ANALYSIS FOR DISTRIBUTION POLE SIZE = 35 FT

	H-W COST INDEX		INSTALLED		REPLACEMENT	UNIT COSTS	
		BASE=	QUANTITY	COST	COST	INSTALLED	REPLACED
YEAR	INDEX	1994	(NO.)	($)	($)	($/POLE)	($/POLE)
1980	219	1.60	27	10,256	16,391	379.85	607.07
1981	241	1.45	27	13,611	19,767	504.11	732.11
1982	263	1.33	8	2,930	3,899	366.25	487.40
1983	265	1.32	23	8,915	11,775	387.61	511.94
1984	267	1.31	0	0	0	.	.
1985	262	1.34	2	1,429	1,909	714.50	954.48
1986	264	1.33	5	3,398	4,505	679.60	900.98
1987	265	1.32	6	26,318	34,760	4,386.33	5,793.27
1988	276	1.27	3	1,345	1,706	448.33	568.54
1989	285	1.23	3	1,916	2,353	638.67	784.33
1990	294	1.19	1	499	594	499.00	594.05
1991	308	1.14	2	1,730	1,966	865.00	982.95
1992	323	1.08	1	1,049	1,137	1,049.00	1,136.69
1993	331	1.06	2	749	792	374.50	396.00
1994	350	1.00	2	1,424	1,424	712.00	712.00
TOTAL	FOR 15	YEARS	112	75,569	102,976	674.72	919.43

MECO COST ANALYSIS FOR DISTRIBUTION POLE SIZE = 40 FT

	H-W COST INDEX		INSTALLED		REPLACEMENT	UNIT COSTS	
		BASE=	QUANTITY	COST	COST	INSTALLED	REPLACED
YEAR	INDEX	1994	(NO.)	($)	($)	($/POLE)	($/POLE)
1980	219	1.60	21	9,751	15,584	464.33	742.09
1981	241	1.45	122	90,360	131,228	740.66	1,075.64
1982	263	1.33	86	45,275	60,252	526.45	700.60
1983	265	1.32	11	7,849	10,367	713.55	942.42
1984	267	1.31	2	1,094	1,434	547.00	717.04
1985	262	1.34	1	474	633	474.00	633.21
1986	264	1.33	10	12,790	16,956	1,279.00	1,695.64
1987	265	1.32	11	7,390	9,760	671.82	887.31
1988	276	1.27	11	10,141	12,860	921.91	1,169.09
1989	285	1.23	7	3,382	4,153	483.14	593.33
1990	294	1.19	29	23,418	27,879	807.52	961.33
1991	308	1.14	9	12,578	14,293	1,397.56	1,588.13
1992	323	1.08	9	15,235	16,509	1,692.78	1,834.28
1993	331	1.06	28	31,378	33,179	1,120.64	1,184.97
1994	350	1.00	25	35,168	35,168	1,406.72	1,406.72
TOTAL FOR 15 YEARS			382	306,283	390,255	801.79	1,021.61

MECO COST ANALYSIS FOR DISTRIBUTION POLE SIZE = 45 FT

	H-W COST INDEX		INSTALLED		REPLACEMENT	UNIT COSTS	
		BASE=	QUANTITY	COST	COST	INSTALLED	REPLACED
YEAR	INDEX	1994	(NO.)	($)	($)	($/POLE)	($/POLE)
1980	219	1.60	1	525	839	525.00	839.04
1981	241	1.45	0	0	0	.	.
1982	263	1.33	0	0	0	.	.
1983	265	1.32	0	0	0	.	.
1984	267	1.31	3	2,125	2,786	708.33	928.53
1985	262	1.34	2	1,428	1,908	714.00	953.82
1986	264	1.33	0	0	0	.	.
1987	265	1.32	3	2,929	3,868	976.33	1,289.50
1988	276	1.27	10	9,706	12,308	970.60	1,230.83
1989	285	1.23	3	3,069	3,769	1,023.00	1,256.32
1990	294	1.19	2	2,070	2,464	1,035.00	1,232.14
1991	308	1.14	3	4,599	5,226	1,533.00	1,742.05
1992	323	1.08	2	4,736	5,132	2,368.00	2,565.94
1993	331	1.06	4	4,551	4,812	1,137.75	1,203.06
1994	350	1.00	3	5,259	5,259	1,753.00	1,753.00
TOTAL FOR 15 YEARS			36	40,997	48,372	1,138.81	1,343.65

MECO COST ANALYSIS FOR DISTRIBUTION POLE SIZE = 50 FT

	H-W COST INDEX		INSTALLED		REPLACEMENT	UNIT COSTS	
		BASE=	QUANTITY	COST	COST	INSTALLED	REPLACED
YEAR	INDEX	1994	(NO.)	($)	($)	($/POLE)	($/POLE)
1980	219	1.60	0	0	0	.	.
1981	241	1.45	0	0	0	.	.
1982	263	1.33	0	0	0	.	.
1983	265	1.32	0	0	0	.	.
1984	267	1.31	0	0	0	.	.
1985	262	1.34	0	0	0	.	.
1986	264	1.33	0	0	0	.	.
1987	265	1.32	0	0	0	.	.
1988	276	1.27	0	0	0	.	.
1989	285	1.23	0	0	0	.	.
1990	294	1.19	0	0	0	.	.
1991	308	1.14	0	0	0	.	.
1992	323	1.08	0	0	0	.	.
1993	331	1.06	1	1,748	1,848	1,748.00	1,848.34
1994	350	1.00	1	1,818	1,818	1,818.00	1,818.00
TOTAL	FOR 15	YEARS	2	3,566	3,666	1,783.00	1,833.17

MECO COST ANALYSIS FOR DISTRIBUTION POLE SIZE = 55 FT

YEAR	H-W COST INDEX INDEX	INDEX BASE= 1994	INSTALLED QUANTITY (NO.)	INSTALLED COST ($)	REPLACEMENT COST ($)	UNIT COSTS INSTALLED ($/POLE)	UNIT COSTS REPLACED ($/POLE)
1980	219	1.60	0	0	0	.	.
1981	241	1.45	82	76,052	110,449	927.46	1,346.94
1982	263	1.33	0	0	0	.	.
1983	265	1.32	0	0	0	.	.
1984	267	1.31	0	0	0	.	.
1985	262	1.34	0	0	0	.	.
1986	264	1.33	0	0	0	.	.
1987	265	1.32	0	0	0	.	.
1988	276	1.27	0	0	0	.	.
1989	285	1.23	4	3,753	4,609	938.25	1,152.24
TOTAL FOR 10 YEARS			86	79,805	115,058	927.97	1,337.88
OVERALL TOTAL			803	591,682	766,683	736.84	954.77

maui

MECO: SUMMARY OF OVERHEAD PRIMARY CONDUCTORS
DATA PERIOD = 1982 - 1994

TYPE	SIZE (AMPS)	INSTALLED QUANTITY (CON FT)	INSTALLED COST ($)	REPLACED COST ($)	UNIT COSTS INST. ($/FT)	UNIT COSTS REPL. ($/FT)
1/0_AAC	345	745,726	870,113	1,002,262	1.17	1.34
3/0_AAAC	345	259,306	642,315	697,323	2.48	2.69
336.4_KCM	515	407,144	1,472,955	1,632,341	3.62	4.01
TOTALS AND AVERAGES		1,412,176	2,985,383	3,331,926	2.11	2.36

CUSTOMER COMPONENT, MIN. SIZE METHOD (%) = 55.19 56.96

MAUI OH PRIMARY

MOHPC - MAUI OH Pri Acct 365

Es 1-16-95

MECO COST ANALYSIS FOR OH PRIMARY CONDUCTOR = 1/0_AAC 245 AMP

	R-W COST INDEX		INSTALLED		REPLACED	UNIT COSTS	
		BASE=	QUANTITY	COST	COST	INST.	REPL.
YEAR	INDEX	1991	FT.)	($)	($)	($/FT)	($/FT)
1982	263	1.29	31,527	35,197	45,234	1.12	1.43
1983	278	1.22	142,238	138,981	168,977	0.98	1.19
1984	278	1.22	90,667	92,498	112,462	1.02	1.24
1985	263	1.29	47,455	46,065	59,201	0.97	1.25
1986	263	1.29	55,383	65,540	84,230	1.18	1.52
1987	255	1.33	62,205	53,876	71,412	0.87	1.15
1988	310	1.09	46,275	52,522	57,266	1.13	1.24
1989	312	1.08	26,798	33,498	36,289	1.25	1.35
1990	319	1.06	81,712	102,140	108,224	1.25	1.32
1991	336	1.01	28,585	41,552	41,799	1.45	1.46
1992	312	1.08	59,240	88,092	95,433	1.49	1.61
1993	329	1.03	36,099	57,832	59,414	1.60	1.65
1994	338	1.00	37,542	62,320	62,320	1.66	1.66
TOTAL FOR 13		YEARS	745,726	870,113	1,002,262	1.17	1.34

MECO COST ANALYSIS FOR CH PRIMARY CONDUCTOR = 3/0_AAAC 345 AMP

	H-W COST INDEX		INSTALLED		REPLACED	UNIT COSTS	
		BASE=	QUANTITY	COST	COST	INST.	REPL.
YEAR	INDEX	1991	(FT.)	($)	($)	($/FT)	($/FT)
1982	263	1.29	3,669	7,380	9,485	2.01	2.59
1983	278	1.22	7,268	12,606	15,327	1.73	2.11
1984	278	1.22	21,587	33,078	40,217	1.53	1.86
1985	263	1.29	3,043	6,042	7,765	1.99	2.55
1986	263	1.29	23,331	41,217	52,971	1.77	2.27
1987	255	1.33	9,489	27,283	36,163	2.88	3.81
1988	310	1.09	22,980	41,231	44,955	1.79	1.96
1989	312	1.08	13,770	27,540	29,835	2.00	2.17
1990	319	1.06	28,541	57,082	60,482	2.00	2.12
1991	336	1.01	9,580	72,825	73,258	7.60	7.65
1992	312	1.08	41,706	95,222	103,157	2.28	2.47
1993	329	1.03	36,442	105,972	108,871	2.91	2.99
1994	338	1.00	37,900	114,837	114,837	3.03	3.03
TOTAL FOR 13		YEARS	259,306	642,315	697,323	2.48	2.69

MECO COST ANALYSIS FOR CH PRIMARY CONDUCTOR - 336.4_KCM 515 AMP

	H-W COST INDEX		INSTALLED		REPLACED	UNIT COSTS	
		BASE=	QUANTITY	COST	COST	INST.	REPL.
YEAR	INDEX	1991	(FT.)	($)	($)	($/FT)	($/FT)
1992	263	1.29	10,072	23,341	29,937	2.32	2.98
1993	278	1.22	13,722	26,584	32,686	1.96	2.38
1984	278	1.22	38,427	88,728	107,878	2.31	2.81
1985	263	1.29	7,106	18,815	24,180	2.65	3.40
1986	263	1.29	29,457	86,480	111,142	2.94	3.77
1987	255	1.33	29,685	85,751	113,662	2.89	3.83
1988	310	1.09	64,877	179,541	195,758	2.77	3.02
1989	312	1.08	27,808	83,424	90,376	3.00	3.25
1990	319	1.06	94,715	284,145	301,069	3.00	3.18
1991	336	1.01	19,059	126,631	127,385	6.64	6.68
1992	312	1.08	55,534	325,222	352,324	5.86	6.34
1993	329	1.03	8,178	69,149	71,041	8.46	8.69
1994	338	1.00	8,505	74,844	74,844	8.80	8.80
TOTAL FOR 13		YEARS	407,144	1,472,955	1,632,341	3.62	4.01
OVERALL TOTAL			1,412,176	2,985,383	3,331,926	2.11	2.36

MECO: SUMMARY OF OVERHEAD SECONDARY CONDUCTORS
DATA PERIOD = 1982 - 1994

Maui

TYPE	SIZE (AMPS)	INSTALLED QUANTITY (CON FT)	INSTALLED COST ($)	REPLACED COST ($)	UNIT COSTS INST. ($/FT)	UNIT COSTS REPL. ($/FT)
4/3_AL_TPX	100	124,080	65,796	78,967	0.53	0.64
1/0_AL_QUAD	200	50,672	130,069	147,515	2.56	2.90
1/0_AER_TPX	220	275,838	606,536	740,272	2.20	2.68
1/0_AL_TPX	220	518,130	838,998	961,593	1.62	1.86
4/0_AL_QUAD	300	13,780	50,498	60,901	3.66	4.42
4/0_AL_TPX	320	5,115	12,252	15,214	2.40	2.97
TOTALS AND AVERAGES		987,815	1,704,149	2,004,461	1.73	2.03

CUSTOMER COMPONENT, MIN. SIZE METHOD (%) = 30.74 (31.36)

MAUI OH SECONDARY

MOHSC - MAUI OH SEC

Es 1-17-95

MECO COST ANALYSIS FOR OH SECOND CONDUCTOR = 4/3_AL_TPX 100 AMP

YEAR	R-W COST INDEX INDEX	BASE= 1994	INSTALLED QUANTITY (CON FT)	INSTALLED COST ($)	REPLACED COST ($)	UNIT COSTS INST. ($/FT)	UNIT COSTS REPL. ($/FT)
1982	263	1.29	17,052	7,284	9,361	0.43	0.55
1983	278	1.22	14,151	4,770	5,799	0.34	0.41
1984	278	1.22	13,743	6,976	8,482	0.51	0.62
1985	263	1.29	9,941	7,541	9,693	0.76	0.97
1986	263	1.29	12,651	7,869	10,113	0.62	0.80
1987	255	1.33	16,596	8,784	11,643	0.53	0.70
1988	310	1.09	5,271	2,790	3,042	0.53	0.58
1989	312	1.08	6,609	3,855	4,176	0.58	0.63
1990	319	1.06	8,046	4,694	4,974	0.58	0.62
1991	336	1.01	11,409	6,258	6,295	0.55	0.55
1992	312	1.08	8,610	4,974	5,388	0.58	0.63
1993	329	1.03	.	.	.	.	.
1994	338	1.00	.	.	.	.	.
TOTAL FOR 13 YEARS			124,080	65,796	78,967	0.53	0.64

MECO COST ANALYSIS FOR OH SECOND CONDUCTOR = 1/0_AL_QUAD 200 AMP

	H-W COST INDEX		INSTALLED		REPLACED	UNIT COSTS	
		BASE=	QUANTITY	COST	COST	INST.	REPL.
YEAR	INDEX	1994	(CON FT)	($)	($)	($/FT)	($/FT)
1982	263	1.29	5,056	8,712	11,196	1.72	2.21
1983	278	1.22	3,368	6,259	7,610	1.86	2.26
1984	278	1.22	5,964	8,990	10,930	1.51	1.83
1985	263	1.29	3,280	5,441	6,993	1.66	2.13
1986	263	1.29	6,984	14,189	18,492	2.06	2.65
1987	255	1.33	2,752	6,396	8,478	2.32	3.08
1988	310	1.09	3,332	9,218	10,051	2.77	3.02
1989	312	1.08	1,104	3,309	3,585	3.00	3.25
1990	319	1.06	5,348	16,044	17,000	3.00	3.18
1991	336	1.01	1,828	5,473	5,506	2.99	3.01
1992	312	1.08	6,360	17,582	19,047	2.76	2.99
1993	329	1.03	2,696	13,584	13,956	5.04	5.18
1994	338	1.00	2,800	14,672	14,672	5.24	5.24
TOTAL FOR 13		YEARS	50,872	130,069	147,515	2.56	2.90

MECO COST ANALYSIS FOR OH SECOND CONDUCTOR = 1/0_AER_TPX 220 AMP

	R-W COST INDEX		INSTALLED		REPLACED	UNIT COSTS	
		BASE=	QUANTITY	COST	COST	INST.	REPL.
YEAR	INDEX	1994	(CON FT)	($)	($)	($/FT)	($/FT)
1982	263	1.29	39,162	86,045	110,583	2.20	2.82
1983	278	1.22	29,196	53,834	65,453	1.84	2.24
1984	278	1.22	23,874	60,564	73,635	2.54	3.08
1985	263	1.29	32,640	80,166	103,027	2.46	3.16
1986	263	1.29	33,810	70,893	91,110	2.10	2.69
1987	255	1.33	42,099	87,002	115,320	2.07	2.74
1988	310	1.09	26,988	55,871	60,917	2.07	2.26
1989	312	1.08	24,978	58,282	63,139	2.33	2.53
1990	319	1.06	23,091	53,879	57,088	2.33	2.47
TOTAL FOR 9 YEARS			275,838	606,536	740,272	2.20	2.68

MECO COST ANALYSIS FOR OH SECOND CONDUCTOR = 1/0_AL_TPX 220 AMP

	H-W COST INDEX		INSTALLED		REPLACED	UNIT COSTS	
		BASE=	QUANTITY	COST	COST	INST.	REPL.
YEAR	INDEX	1994	(CON FT)	($)	($)	($/FT)	($/FT)
1982	263	1.29	36,963	62,864	80,791	1.70	2.19
1983	278	1.22	41,574	59,459	72,292	1.43	1.74
1984	278	1.22	26,259	38,056	46,270	1.45	1.76
1985	263	1.29	36,000	62,602	80,454	1.74	2.23
1986	263	1.29	48,060	67,923	87,293	1.41	1.82
1987	255	1.33	38,619	62,249	82,510	1.61	2.14
1988	310	1.09	56,109	92,829	101,214	1.65	1.80
1989	312	1.08	35,463	59,105	64,030	1.67	1.81
1990	319	1.06	38,187	63,645	67,436	1.67	1.77
1991	336	1.01	42,444	71,761	72,188	1.69	1.70
1992	312	1.08	39,174	85,512	92,638	2.18	2.36
1993	329	1.03	38,862	54,255	55,739	1.40	1.43
1994	338	1.00	40,416	58,738	58,738	1.45	1.45
TOTAL FOR 13		YEARS	518,130	838,998	961,593	1.62	1.86

MECO COST ANALYSIS FOR OH SECOND CONDUCTOR = 4/0_AL_QUAD 300 AMP

	H-W COST INDEX		INSTALLED		REPLACED	UNIT COSTS	
		BASE=	QUANTITY	COST	COST	INST.	REPL.
YEAR	INDEX	1994	(CON FT)	($)	($)	($/FT)	($/FT)
1982	263	1.29	260	3,487	4,481	13.41	17.24
1983	278	1.22	276	1,140	1,386	4.13	5.02
1984	278	1.22	620	915	1,112	1.48	1.79
1985	263	1.29	1,388	4,971	6,389	3.58	4.60
1986	263	1.29	6,896	23,034	29,603	3.34	4.29
1987	255	1.33	0	0	0	.	.
1988	310	1.09	1,044	3,380	3,685	3.24	3.53
1989	312	1.08	920	3,222	3,490	3.50	3.79
1990	319	1.06	276	976	1,034	3.54	3.75
1991	336	1.01	100	418	420	4.18	4.20
1992	312	1.08	680	3,227	3,496	4.75	5.14
1993	329	1.03	648	2,756	2,831	4.25	4.37
1994	338	1.00	672	2,972	2,972	4.42	4.42
TOTAL FOR 13 YEARS			13,780	50,498	60,901	3.66	4.42

MECO COST ANALYSIS FOR OH SECOND CONDUCTOR = 4/0_AL_TPX 320 AMP

	H-W COST INDEX		INSTALLED		REPLACED	UNIT COSTS	
		BASE=	QUANTITY	COST	COST	INST.	REPL.
YEAR	INDEX	1994	(CON FT)	($)	($)	($/FT)	($/FT)
1982	263	1.29	0	0	0	.	.
1983	278	1.22	0	0	0	.	.
1984	278	1.22	0	0	0	.	.
1985	263	1.29	3,933	8,446	10,855	2.15	2.76
1986	263	1.29	159	496	637	3.12	4.01
1987	255	1.33	162	563	746	3.48	4.61
1988	310	1.09	0	0	0	.	.
1989	312	1.08	396	1,317	1,427	3.33	3.60
1990	319	1.06	0	0	0	.	.
1991	336	1.01	0	0	0	.	.
1992	312	1.08	465	1,430	1,549	3.08	3.33
1993	329	1.03	0	0	0	.	.
1994	338	1.00	0	0	0	.	.
TOTAL FOR 13		YEARS	5,115	12,252	15,214	2.40	2.97
OVERALL TOTAL			987,815	1,704,149	2,004,461	1.73	2.03

Lanai

MECO: SUMMARY OF SELECTED OVERHEAD PRIMARY CONDUCTORS
DATA PERIOD = 1982 - 1994

TYPE	SIZE (AMPS)	INSTALLED QUANTITY (CON FT)	INSTALLED COST ($)	REPLACED COST ($)	UNIT COSTS INST. ($/FT)	UNIT COSTS REPL. ($/FT)
1/0_AAC	245	53,084	84,105	90,082	1.58	1.70
3/0_AAAC	345	85,878	95,963	102,213	1.12	1.19
336.4_KCM	515	157,545	314,734	339,365	2.00	2.15
TOTALS AND AVERAGES		296,507	494,802	531,659	1.67	(1.79)

CUSTOMER COMPONENT, MIN. SIZE METHOD (%) = 94.94 94.64

Zero Intercept

50.28

0.90 ÷ 1.79

LANAI OH PRIMARY

LOHPC - LANAI OH Primary

E> 1-17-95

AVERAGE REPLACEMENT COST VS AMP CAPACITY FOR SELECTED SIZES

GENERAL LINEAR MODELS PROCEDURE

DEPENDENT VARIABLE: TOTRUC

SOURCE	DF	SUM OF SQUARES	MEAN SQUARE	F VALUE	PR > F	R-SQUARE	C.V.
MODEL	1	0.16690944	0.16690944	0.56	0.5910	0.358994	32.4871
ERROR	1	0.29802778	0.29802778		ROOT MSE		TOTRUC MEAN
CORRECTED TOTAL	2	0.46493723			0.54591921		1.68041901

SOURCE	DF	TYPE I SS	F VALUE	PR > F	DF	TYPE III SS	F VALUE	PR > F
SIZE	1	0.16690944	0.56	0.5910	1	0.16690944	0.56	0.5910

PARAMETER	ESTIMATE	T FOR H0: PARAMETER=0	PR > |T|	STD ERROR OF ESTIMATE
INTERCEPT	0.90090988	0.83	0.5598	1.08826187
SIZE	0.00211631	0.75	0.5910	0.00282793

DOCKET NO. 94-0345 TEST YEAR 1996
OVERHEAD PRIMARY DISTRIBUTION LINE ANALYSIS

OBS	TYPE	COND	SIZE	YEAR	Q	ICOST
1	1/0_AAC	1	345	1982	3885	5443
2	1/0_AAC	1	345	1983	0	0
3	1/0_AAC	1	345	1984	0	0
4	1/0_AAC	1	345	1985	0	0
5	1/0_AAC	1	345	1986	0	0
6	1/0_AAC	1	345	1987	0	0
7	1/0_AAC	1	345	1988	16194	9576
8	1/0_AAC	1	345	1989	4239	8478
9	1/0_AAC	1	345	1990	17420	34840
10	1/0_AAC	1	345	1991	2550	7827
11	1/0_AAC	1	345	1992	3974	7062
12	1/0_AAC	1	345	1993	2364	5226
13	1/0_AAC	1	345	1994	2458	5653
14	3/0_AAAC	1	345	1982	0	0
15	3/0_AAAC	1	345	1983	0	0
16	3/0_AAAC	1	345	1984	0	0
17	3/0_AAAC	1	345	1985	0	0
18	3/0_AAAC	1	345	1986	0	0
19	3/0_AAAC	1	345	1987	0	0
20	3/0_AAAC	1	345	1988	6593	6191
21	3/0_AAAC	1	345	1989	47007	47007
22	3/0_AAAC	1	345	1990	26097	26097
23	3/0_AAAC	1	345	1991	0	0
24	3/0_AAAC	1	345	1992	0	0
25	3/0_AAAC	1	345	1993	3030	8002
26	3/0_AAAC	1	345	1994	3151	8666
27	336.4_KCM	1	515	1982	0	0
28	336.4_KCM	1	515	1983	0	0
29	336.4_KCM	1	515	1984	0	0
30	336.4_KCM	1	515	1985	0	0
31	336.4_KCM	1	515	1986	0	0
32	336.4_KCM	1	515	1987	0	0
33	336.4_KCM	1	515	1988	55815	89723
34	336.4_KCM	1	515	1989	92640	185280
35	336.4_KCM	1	515	1990	0	0
36	336.4_KCM	1	515	1991	0	0
37	336.4_KCM	1	515	1992	0	0
38	336.4_KCM	1	515	1993	9090	39731
39	336.4_KCM	1	515	1994	0	0

DOCKET NO. 94-0345 TEST YEAR 1996
OVERHEAD PRIMARY DISTRIBUTION LINE ANALYSIS

VARIABLE	N	MEAN	STANDARD DEVIATION	MINIMUM VALUE	MAXIMUM VALUE	STD ERROR OF MEAN	SUM	VARIANCE	C.V.
TYPE=1/0_AAC									
COND	13	1.00000000	0.00000000	1.0000000	1.000000	0.0000000	13.000000	0.000	0.000
SIZE	13	245.00000000	0.00000000	245.0000000	245.000000	0.0000000	3185.000000	0.000	0.000
YEAR	13	1988.00000000	1.89444048	1982.0000000	1994.000000	1.0801234	25844.000000	15.167	0.196
Q	13	4083.38461538	5887.32699022	0.0000000	17430.000000	1632.8507184	53084.000000	34660619.090	144.178
ICOST	13	6469.61538462	9279.46821877	0.0000000	34840.000000	2573.6616209	84105.000000	86108530.423	143.432
TYPE=3/0_AAAC									
COND	13	1.00000000	0.0000000	1.0000000	1.000000	0.0000000	13.000000	0.00	0.000
SIZE	13	345.00000000	0.0000000	345.0000000	345.000000	0.0000000	4485.000000	0.00	0.000
YEAR	13	1988.00000000	3.8944405	1982.0000000	1994.000000	1.0801234	25844.000000	15.17	0.196
Q	13	6606.00000000	14100.7645774	0.0000000	47007.000000	3910.8484390	85878.000000	198831561.67	213.454
ICOST	13	7381.76923077	14023.1795560	0.0000000	47007.000000	3889.3302257	95963.000000	196649564.86	189.970
TYPE=336.4_KCM									
COND	13	1.0000000	0.0000000	1.0000000	1.00000	0.000000	13.00000	0.0	0.000
[illegible]	13	515.0000000	0.0000000	515.0000000	515.00000	0.000000	6695.00000	0.0	0.000
	13	1988.0000000	3.8944405	1982.0000000	1994.00000	1.080123	25844.00000	15.2	0.196
	13	12118.8461538	28680.4932368	0.0000000	92640.00000	7954.537613	157545.00000	822570692.3	236.660
ICOST	13	24210.3076923	55028.5081486	0.0000000	185280.00000	15262.162134	314734.00000	3028136709.1	227.294

Lanai

MECO: SUMMARY OF OVERHEAD SECONDARY CONDUCTORS
DATA PERIOD = 1982 - 1994

TYPE	SIZE (AMPS)	INSTALLED QUANTITY (CON FT)	INSTALLED COST ($)	REPLACED COST ($)	UNIT COSTS INST. ($/FT)	UNIT COSTS REPL. ($/FT)
4/3_AL_TPX	100	58,815	20,251	21,748	0.34	0.37
1/0_AER_TPX	220	1,776	969	1,168	0.55	0.66
1/0_AL_TPX	220	2,100	5,937	6,431	2.83	3.06
4/0_AL_QUAD	300	448	3,847	4,194	8.59	9.36
TOTALS AND AVERAGES		63,139	31,004	33,541	0.49	0.53

CUSTOMER COMPONENT, MIN. SIZE METHOD (%) = 70.12 (69.61)

LANAI OH SECONDARY

LOHSC - Lanai CH Sec

Es 1-17-95

MECO COST ANALYSIS FOR OH SECOND CONDUCTOR = 4/3_AL_TPX 100 AMP

	H-W COST INDEX		INSTALLED		REPLACED	UNIT COSTS	
		BASE=	QUANTITY	COST	COST	INST.	REPL.
YEAR	INDEX	1994	(CON FT)	($)	($)	($/FT)	($/FT)
1982	263	1.29	0	0	0	.	
1983	278	1.22	0	0	0	.	.
1984	278	1.22	0	0	0	.	.
1985	263	1.29	0	0	0	.	.
1986	263	1.29	0	0	0	.	.
1987	255	1.33	0	0	0	.	.
1988	310	1.09	0	0	0	.	.
1989	312	1.08	37,377	12,459	13,497	0.33	0.36
1990	319	1.06	19,998	6,666	7,063	0.33	0.35
1991	336	1.01	450	417	419	0.93	0.93
1992	312	1.08	990	709	768	0.72	0.78
1993	329	1.03	0	0	0	.	.
1994	338	1.00	0	0	0	.	.
TOTAL FOR 13 YEARS			58,815	20,251	21,748	0.34	0.37

MECO COST ANALYSIS FOR OH SECOND CONDUCTOR = 1/0_AER_TPX 220 AMP

	R-W COST INDEX		INSTALLED		REPLACED	UNIT COSTS	
		BASE=	QUANTITY	COST	COST	INST.	REPL.
YEAR	INDEX	1994	(CON FT)	($)	($)	($/FT)	($/FT)
1982	263	1.29	0	0	0	.	
1983	278	1.22	1,128	104	126	0.09	0.11
1984	278	1.22	135	123	150	0.91	1.11
1985	263	1.29	330	436	560	1.32	1.70
1986	263	1.29	0	0	0	.	.
1987	255	1.33	0	0	0	.	.
1988	310	1.09	0	0	0	.	.
1989	312	1.08	183	306	331	1.67	1.81
1990	319	1.06	0	0	0	.	.
TOTAL FOR 9 YEARS			1,776	969	1,168	0.55	0.66

MECO COST ANALYSIS FOR OH SECOND CONDUCTOR = 1/0_AL_TPX 220 AMP

	H-W COST INDEX		INSTALLED		REPLACED	UNIT COSTS	
		BASE=	QUANTITY	COST	COST	INST.	REPL.
YEAR	INDEX	1994	(CON FT)	($)	($)	($/FT)	($/FT)
1982	263	1.29	0	0	0	.	.
1983	278	1.22	0	0	0	.	.
1984	278	1.22	0	0	0	.	.
1985	263	1.29	0	0	0	.	.
1986	263	1.29	0	0	0	.	.
1987	255	1.33	0	0	0	.	.
1988	310	1.09	180	230	251	1.28	1.39
1989	312	1.08	0	0	0	.	.
1990	319	1.06	0	0	0	.	.
1991	336	1.01	0	0	0	.	.
1992	312	1.08	1,800	5,669	6,141	3.15	3.41
1993	329	1.03	120	38	39	0.32	0.33
1994	338	1.00	.	.	.	.	.
TOTAL FOR 13 YEARS			2,100	5,937	6,431	2.83	3.06

MECO COST ANALYSIS FOR OH SECOND CONDUCTOR = 4/0_AL_QUAD 300 AMP

	H-W COST INDEX		INSTALLED		REPLACED	UNIT COSTS	
		BASE=	QUANTITY	COST	COST	INST.	REPL.
YEAR	INDEX	1994	(CON FT)	($)	($)	($/FT)	($/FT)
1982	263	1.29	0	0	0	.	.
1983	278	1.22	0	0	0	.	.
1984	278	1.22	0	0	0	.	.
1985	263	1.29	0	0	0	.	.
1986	263	1.29	0	0	0		.
1987	255	1.33	0	0	0	.	.
1988	310	1.09	448	3,847	4,194	8.59	9.36
1989	312	1.08	0	0	0	.	.
1990	319	1.06	0	0	0	.	.
TOTAL FOR 9 YEARS			448	3,847	4,194	8.59	9.36
OVERALL TOTAL			63,139	31,004	33,541	0.49	0.53

Molokai

MECO: SUMMARY OF OVERHEAD PRIMARY CONDUCTORS
DATA PERIOD = 1991 - 1994

TYPE	SIZE (AMPS)	INSTALLED QUANTITY (CON FT)	INSTALLED COST ($)	REPLACED COST ($)	UNIT COSTS INST. ($/FT)	UNIT COSTS REPL. ($/FT)
#2_AAAC	.	11,064	5,754	5,821	0.52	0.53
4/0_AAAC	.	1,590	1,741	1,751	1.09	1.10
1/0_AAC	245	16,421	14,336	14,439	0.87	0.88
3/0_AAAC	345	994	5,904	5,939	5.94	5.97
TOTALS AND AVERAGES		30,069	27,735	27,950	0.92	0.93

CUSTOMER COMPONENT, MIN. SIZE METHOD (%) = 56.52 56.99

MOLOKAI OH PRIMARY

MOOHPC - MOLOKAI OH PRI

ES 1-17-95

MECO COST ANALYSIS FOR OH PRIMARY CONDUCTOR - #2 AAAC . AMP

	H-W COST INDEX		INSTALLED		REPLACED	UNIT COSTS	
		BASE-	QUANTITY	COST	COST	INST.	REPL.
YEAR	INDEX	1994	(FT.)	($)	($)	($/FT)	($/FT)
1991	336	1.01	1,680	1,250	1,257	0.74	0.75
1992	312	1.08	0	0	0	.	.
1993	329	1.03	4,600	2,160	2,219	0.47	0.48
1994	338	1.00	4,784	2,344	2,344	0.49	0.49
TOTAL FOR 4 YEARS			11,064	5,754	5,821	0.52	0.53

MECO COST ANALYSIS FOR OH PRIMARY CONDUCTOR = 4/0_AAAC . AMP

	H-W COST INDEX	BASE=	INSTALLED		REPLACED	UNIT COSTS	
			QUANTITY	COST	COST	INST.	REPL.
YEAR	INDEX	1994	(FT.)	($)	($)	($/FT)	($/FT)
1991	336	1.01	1,590	1,741	1,751	1.09	1.10
1992	312	1.08	0	0	0	.	.
1993	329	1.03	0	0	0	.	.
1994	338	1.00	0	0	0	.	.
TOTAL FOR 4 YEARS			1,590	1,741	1,751	1.09	1.10

MECO COST ANALYSIS FOR OH PRIMARY CONDUCTOR - 1/0_AAC 245 AMP

	H-W COST INDEX		INSTALLED		REPLACED	UNIT COSTS	
		BASE=	QUANTITY	COST	COST	INST.	REPL.
YEAR	INDEX	1994	(FT.)	($)	($)	($/FT)	($/FT)
1991	336	1.01	9,980	12,646	12,721	1.27	1.27
1992	312	1.06	140	76	82	0.54	0.59
1993	329	1.03	3,089	779	800	0.25	0.26
1994	338	1.00	3,212	835	835	0.26	0.26
TOTAL FOR 4 YEARS			16,421	14,336	14,439	0.87	0.88

MECO COST ANALYSIS FOR OH PRIMARY CONDUCTOR - 3/0_AAAC 345 AMP

	H-W COST INDEX		INSTALLED		REPLACED	UNIT COSTS	
		BASE=	QUANTITY	COST	COST	INST.	REPL.
YEAR	INDEX	1994	(FT.)	($)	($)	($/FT)	($/FT)
1991	336	1.01	994	5,904	5,939	5.94	5.97
1992	312	1.08	0	0	0	.	.
1993	329	1.03	0	0	0	.	.
1994	338	1.00	0	0	0	.	.
TOTAL FOR 4 YEARS			994	5,904	5,939	5.94	5.97

Molokai

MECO: SUMMARY OF OVERHEAD SECONDARY CONDUCTORS
DATA PERIOD = 1991 - 1994

TYPE	SIZE (AMPS)	INSTALLED QUANTITY (CON FT)	INSTALLED COST ($)	REPLACED COST ($)	UNIT COSTS INST. ($/FT)	UNIT COSTS REPL. ($/FT)
4/3_AL_TPX	100	6,447	3,084	3,173	0.48	0.49
1/0_AL_QUAD	200	3,304	6,905	6,998	2.09	2.12
1/0_AL_TPX	220	16,002	27,884	28,578	1.74	1.79
4/0_AL_QUAD	300	4,488	17,644	17,876	3.93	3.98
TOTALS AND AVERAGES		30,241	55,517	56,625	1.84	1.87

CUSTOMER COMPONENT, MIN. SIZE METHOD (%) = 26.06 (26.29)

MOLOKAI OH SECONDARY

MOOHSC - Molokai OH Sec

ES 1-17-95

MECO COST ANALYSIS FOR OH SECOND CONDUCTOR = 4/3_AL_TPX 100 AMP

	H-W COST INDEX		INSTALLED		REPLACED	UNIT COSTS	
		BASE=	QUANTITY	COST	COST	INST.	REPL.
YEAR	INDEX	1994	(CON FT)	($)	($)	($/FT)	($/FT)
1991	336	1.01	831	680	684	0.82	0.82
1992	312	1.08	2,220	764	828	0.34	0.37
1993	329	1.03	1,665	786	808	0.47	0.48
1994	338	1.00	1,731	854	854	0.49	0.49
TOTAL FOR 4 YEARS			6,447	3,084	3,173	0.48	0.49

MECO COST ANALYSIS FOR OR SECOND CONDUCTOR = 1/0_AL_QUAD 200 AMP

YEAR	H-W COST INDEX INDEX	BASE= 1994	INSTALLED QUANTITY (CON FT)	INSTALLED COST ($)	REPLACED COST ($)	UNIT COSTS INST. ($/FT)	UNIT COSTS REPL. ($/FT)
1991	336	1.01	0	0	0	.	.
1992	312	1.08	0	0	0	.	.
1993	329	1.03	1,620	3,385	3,478	2.09	2.15
1994	338	1.00	1,684	3,520	3,520	2.09	2.09
TOTAL FOR 4 YEARS			3,304	6,905	6,998	2.09	2.12

MECO COST ANALYSIS FOR OH SECOND CONDUCTOR = 1/0_AL_TPX 220 AMP

	H-W COST INDEX		INSTALLED		REPLACED	UNIT COSTS	
		BASE=	QUANTITY	COST	COST	INST.	REPL.
YEAR	INDEX	1994	(CON FT)	($)	($)	($/FT)	($/FT)
1991	336	1.01	3,138	5,728	5,762	1.83	1.84
1992	312	1.08	2,583	5,258	5,696	2.04	2.21
1993	329	1.03	5,040	8,111	8,333	1.61	1.65
1994	338	1.00	5,241	8,787	8,787	1.68	1.68
TOTAL FOR 4 YEARS			16,002	27,884	28,578	1.74	1.79

MECO COST ANALYSIS FOR OH SECOND CONDUCTOR = 4/0_AL_QUAD 300 AMP

	B-W COST INDEX		INSTALLED		REPLACED	UNIT COSTS	
		BASE=	QUANTITY	COST	COST	INST.	REPL.
YEAR	INDEX	1994	(CON FT)	($)	($)	($/FT)	($/FT)
1991	336	1.01	0	0	0	.	.
1992	312	1.08	0	0	0	.	.
1993	329	1.03	2,200	8,475	8,707	3.85	3.96
1994	338	1.00	2,288	9,169	9,169	4.01	4.01
TOTAL FOR 4 YEARS			4,488	17,644	17,876	3.93	3.98
OVERALL TOTAL			30,241	55,517	56,625	1.84	1.87

MECO: SUMMARY OF UNDERGROUND CONDUITS
DATA PERIOD = 1980 - 1994

SIZE (INCH)	INSTALLED QUANTITY (NO.)	INSTALLED COST ($)	REPLACEMENT COST ($)	AVE COSTS INSTALLED ($/FT)	AVE COSTS REPLACED ($/FT)
2	13,089	229,353	242,161	17.52	18.50
3	3,726	359,160	417,332	96.39	112.17
4	3,323	339,841	386,645	102.27	116.35
5	1,271	85,693	93,296	67.42	73.40
TOTALS AND AVERAGES	21,409	1,014,047	1,140,034	47.37	53.25

MAUI UG CONDUITS

CUSTOMER COMPONENT, MIN. SIZE METHOD (%) =	36.99	34.74
Zero Intercept		39.42

MUGC - Maui UG Conduits

Es 1-17-95

MECO COST ANALYSIS FOR UG CONDUITS SIZE = 2 INCH

YEAR	H-W COST INDEX INDEX	BASE= 1994	INSTALLED QUANTITY (NO.)	INSTALLED COST ($)	REPLACEMENT COST ($)	UNIT COSTS INSTALLED ($/FT)	UNIT COSTS REPLACED ($/FT)
1980	198	1.56	105	1,718	2,672	16.36	25.45
1981	215	1.43	380	6,210	8,896	16.34	23.41
1982	232	1.33	0	0	0	.	.
1983	246	1.25	10	283	354	28.30	35.43
1984	253	1.22	18	3,115	3,792	173.06	210.68
1985	248	1.24	0	0	0	.	.
1986	249	1.24	25	268	332	10.72	13.26
1987	254	1.21	20	121	147	6.05	7.34
1988	268	1.15	30	737	847	24.57	28.23
1989	299	1.03	120	704	725	5.87	6.04
1989	299	1.03	12	3,467	3,571	288.92	297.61
1990	296	1.04	0	0	0	.	.
1990	296	1.04	15	4,546	4,730	303.07	315.35
1991	291	1.06	74	12,841	13,591	173.53	183.66
1991	291	1.06	27	1,803	1,908	66.78	70.68
1992	290	1.06	6,858	84,442	89,683	12.31	13.08
1992	290	1.06	32	8,361	8,880	261.28	277.50
1993	299	1.03	2,303	42,380	43,656	18.40	18.96
1993	299	1.03	30	607	625	20.23	20.84
994	308	1.00	3,000	57,000	57,000	19.00	19.00
1994	308	1.00	30	750	750	25.00	25.00
TOTAL	FOR 21	YEARS	13089	229,353	242,161	17.52	18.50

MECO COST ANALYSIS FOR UG CONDUITS SIZE = 3 INCH

YEAR	H-W COST INDEX INDEX	BASE= 1994	INSTALLED QUANTITY (NO.)	INSTALLED COST ($)	REPLACEMENT COST ($)	UNIT COSTS INSTALLED ($/FT)	UNIT COSTS REPLACED ($/FT)
1980	198	1.56	274	9,913	15,420	36.18	56.28
1980	198	1.56	53	11,186	17,400	211.06	328.31
1981	215	1.43	220	5,085	7,285	23.11	33.11
1981	215	1.43	31	10,107	14,479	326.03	467.06
1982	232	1.33	35	1,129	1,499	32.26	42.82
1982	232	1.33	24	8,138	10,804	339.08	450.16
1983	246	1.25	0	0	0	.	.
1983	246	1.25	28	14,147	17,713	505.25	632.59
1984	253	1.22	110	1,960	2,386	17.82	21.69
1984	253	1.22	23	8,355	10,171	363.26	442.23
1985	248	1.24	0	0	0	.	.
1985	248	1.24	30	13,704	17,019	456.80	567.32
1986	249	1.24	175	4,091	5,060	23.38	28.92
1986	249	1.24	45	28,170	34,845	626.00	774.33
1987	254	1.21	105	1,327	1,609	12.64	15.32
1987	254	1.21	57	22,353	27,105	392.16	475.53
1988	268	1.15	283	6,670	7,666	23.57	27.09
1988	268	1.15	93	49,623	57,029	533.58	613.22
1989	299	1.03	901	22,534	23,212	25.01	25.76
1989	299	1.03	2	920	948	460.00	473.85
1990	296	1.04	0	0	0	.	.
1990	296	1.04	34	18,702	19,460	550.06	572.36
1991	291	1.06	526	46,082	48,774	87.61	92.73
1991	291	1.06	61	10,370	10,976	170.00	179.93
1992	290	1.06	180	4,105	4,360	22.81	24.22
1992	290	1.06	60	29,945	31,804	499.08	530.06
1993	299	1.03	145	1,906	1,963	13.14	13.54
1993	299	1.03	51	10,188	10,495	199.76	205.78
1994	308	1.00	125	2,500	2,500	20.00	20.00
1994	308	1.00	55	15,950	15,950	290.00	290.00
TOTAL FOR 30 YEARS			3726	359,160	417,932	96.39	112.17

MECO COST ANALYSIS FOR UG CONDUITS SIZE = 4 INCH

	H-W COST INDEX		INSTALLED		REPLACEMENT	UNIT COSTS	
		BASE=	QUANTITY	COST	COST	INSTALLED	REPLACED
YEAR	INDEX	1994	(NO.)	($)	($)	($/FT)	($/FT)
1980	198	1.56	120	5,277	8,209	43.97	68.41
1980	198	1.56	8	2,321	3,610	290.13	451.31
1981	215	1.43	1,242	32,665	46,795	26.30	37.68
1981	215	1.43	14	5,377	7,703	384.07	550.20
1982	232	1.33	0	0	0	.	.
1982	232	1.33	8	3,582	4,755	447.75	594.43
1983	246	1.25	137	7,787	9,750	56.86	71.16
1983	246	1.25	18	10,335	12,940	574.17	718.88
1984	253	1.22	0	0	0	.	.
1984	253	1.22	4	3,810	4,638	952.50	1,159.57
1985	248	1.24	0	0	0	.	.
1985	248	1.24	14	7,619	9,462	544.21	675.88
1986	249	1.24	65	2,128	2,632	32.74	40.50
1986	249	1.24	16	16,606	20,541	1,037.88	1,283.80
1987	254	1.21	70	1,267	1,536	18.10	21.95
1987	254	1.21	33	14,486	17,566	438.97	532.29
1988	268	1.15	180	5,104	5,866	28.36	32.59
1988	268	1.15	39	23,720	27,260	608.21	698.98
1989	299	1.03	360	10,786	11,111	29.96	30.86
1989	299	1.01	0	0	0	.	.
1990	296	1.04	70	1,199	1,248	17.13	17.82
1990	296	1.04	18	11,728	12,203	651.56	677.97
1991	291	1.06	520	46,082	48,774	88.62	93.80
1991	291	1.06	18	2,163	2,289	120.17	127.19
1992	290	1.06	0	0	0	.	.
1992	290	1.06	41	25,179	26,742	614.12	652.24
1993	299	1.03	130	6,771	6,975	52.08	53.65
1993	299	1.03	23	6,349	6,540	276.04	284.35
1994	308	1.00	150	75,000	75,000	500.00	500.00
1994	308	1.00	25	12,500	12,500	500.00	500.00
TOTAL FOR 30 YEARS			3323	339,841	386,645	102.27	116.35

MECO COST ANALYSIS FOR UG CONDUITS SIZE = 5 INCH

	H-W COST INDEX		INSTALLED		REPLACEMENT	UNIT COSTS	
		BASE=	QUANTITY	COST	COST	INSTALLED	REPLACED
YEAR	INDEX	1994	(NO.)	($)	($)	($/FT)	($/FT)
1980	198	1.56	8	3,224	5,015	403.00	626.89
1981	215	1.43	0	0	0	.	.
1982	232	1.33	2	1,745	2,317	872.50	1,158.32
1983	246	1.25	10	2,829	3,542	282.90	354.10
1984	253	1.22	0	0	0	.	.
1985	248	1.24	0	0	0	.	.
1986	249	1.24	0	0	0	.	.
1987	254	1.21	9	10,540	12,781	1,171.11	1,420.09
1988	268	1.15	3	3,123	3,589	1,041.00	1,196.37
1989	299	1.03	0	0	0	.	.
1989	299	1.03	471	24,284	25,015	51.56	53.11
1990	296	1.04	3	3,796	3,950	1,265.33	1,316.63
1990	296	1.04	150	9,012	9,377	60.08	62.52
1991	291	1.06	4	1,295	1,371	323.75	342.66
1991	291	1.06	295	3,692	3,908	12.52	13.25
1992	290	1.06	8	2,970	3,154	371.25	394.29
1992	290	1.06	0	0	0	.	.
1993	299	1.03	5	3,133	3,227	626.60	645.46
1993	299	1.03	0	0	0	.	.
.994	308	1.00	3	1,050	1,050	350.00	350.00
1994	308	1.00	300	15,000	15,000	50.00	50.00
TOTAL FOR 21 YEARS			1271	85,693	93,296	67.42	73.40
OVERALL TOTAL			21409	1,014,047	1,140,034	47.37	53.25

MECO: SUMMARY OF UNDERGROUND CONDUITS
DATA PERIOD = 1980 - 1994

SIZE (INCH)	INSTALLED QUANTITY (NO.)	INSTALLED COST ($)	REPLACEMENT COST ($)	AVE COSTS INSTALLED ($/FT)	AVE COSTS REPLACED ($/FT)
3	32	9,596	10,162	299.88	317.56
4	112	16,972	18,684	151.54	166.82
5	4	1,530	1,637	382.50	409.15
TOTALS AND AVERAGES	148	28,098	30,482	189.85	205.96

CUSTOMER COMPONENT, MIN. SIZE METHOD (%) = 157.95 154.18

zero intercept

55.67

114.66 ÷ 205.96

LANAI UG CONDUIT

LUGC - Lanai UG Conduits

F.S 1-17-95

GENERAL LINEAR MODELS PROCEDURE

1 DENT VARIABLE: TOTRUC

SOURCE	DF	SUM OF SQUARES	MEAN SQUARE	F VALUE	PR > F	R-SQUARE	C.V.
MODEL	1	4194.24619021	4194.24619021	0.16	0.7558	0.140071	53.8765
ERROR	1	25749.48658028	25749.48658028		ROOT MSE		TOTRUC MEAN
CORRECTED TOTAL	2	29943.73277049			160.46646559		297.84134249

SOURCE	DF	TYPE I SS	F VALUE	PR > F	DF	TYPE III SS	F VALUE	PR > F
SIZE	1	4194.24619021	0.16	0.7558	1	4194.24619021	0.16	0.7558

PARAMETER	ESTIMATE	T FOR H0: PARAMETER=0	PR > |T|	STD ERROR OF ESTIMATE
INTERCEPT	114.66391615	0.25	0.8455	463.22678553
SIZE	45.79435659	0.40	0.7558	113.46692597

OBS	TYPE	SIZE	YEAR	Q	ICOST
1	3-PVC-CO	3	1980	0	0
2	3-PVC-CO	3	1981	0	0
3	3-PVC-CO	3	1982	1	924
4	3-PVC-CO	3	1983	0	0
5	3-PVC-CO	3	1984	0	0
6	3-PVC-CO	3	1985	0	0
7	3-PVC-CO	3	1986	0	0
8	3-PVC-CO	3	1987	0	0
9	3-PVC-CO	3	1988	0	0
10	3-PVC-CO	3	1989	0	0
11	3-PVC-CO	3	1990	0	0
12	3-PVC-RI	3	1980	0	0
13	3-PVC-RI	3	1981	0	0
14	3-PVC-RI	3	1982	0	0
15	3-PVC-RI	3	1983	0	0
16	3-PVC-RI	3	1984	0	0
17	3-PVC-RI	3	1985	0	0
18	3-PVC-RI	3	1986	0	0
19	3-PVC-RI	3	1987	0	0
20	3-PVC-RI	3	1988	0	0
21	3-PVC-RI	3	1989	30	8470
22	3-PVC-RI	3	1990	1	202
23	4-PVC-CO	4	1980	0	0
24	4-PVC-CO	4	1981	0	0
25	4-PVC-CO	4	1982	0	0
26	4-PVC-CO	4	1983	0	0
27	4-PVC-CO	4	1984	100	3636
28	4-PVC-CO	4	1985	0	0
29	4-PVC-CO	4	1986	0	0
30	4-PVC-CO	4	1987	0	0
31	4-PVC-CO	4	1988	0	0
32	4-PVC-CO	4	1989	0	0
33	4-PVC-CO	4	1990	0	0
34	4-PVC-CO	4	1991	0	0
35	4-PVC-CO	4	1992	0	0
36	4-PVC-CO	4	1993	2	11135
37	4-PVC-CO	4	1994	.	.
38	4-PVC-RI	4	1980	4	802
39	4-PVC-RI	4	1981	0	0
40	4-PVC-RI	4	1982	0	0
41	4-PVC-RI	4	1983	0	0
42	4-PVC-RI	4	1984	0	0
43	4-PVC-RI	4	1985	0	0
44	4-PVC-RI	4	1986	0	0
45	4-PVC-RI	4	1987	1	502
46	4-PVC-RI	4	1988	0	0
47	4-PVC-RI	4	1989	0	0
48	4-PVC-RI	4	1990	1	705
49	4-PVC-RI	4	1991	2	94
50	4-PVC-RI	4	1992	0	0
51	4-PVC-RI	4	1993	0	0
52	4-PVC-RI	4	1994	1	98
53	5-PVC-RI	5	1980	0	0
54	5-PVC-RI	5	1981	0	0
55	5-PVC-RI	5	1982	0	0

OBS	TYPE	SIZE	YEAR	Q	ICOST
56	5-PVC-RI	5	1983	0	0
57	5-PVC-RI	5	1984	0	0
58	5-PVC-RI	5	1985	0	0
59	5-PVC-RI	5	1986	0	0
60	5-PVC-RI	5	1987	0	0
61	5-PVC-RI	5	1988	2	508
62	5-PVC-RI	5	1989	2	1022
63	5-PVC-RI	5	1990	0	0

ANALYSIS OF UNDERGROUND CONDUITS COSTS

VARIABLE	N	MEAN	STANDARD DEVIATION	MINIMUM VALUE	MAXIMUM VALUE	STD ERROR OF MEAN	SUM	VARIANCE	C.V.
SIZE=3									
YEAR	22	1985.00000000	3.23669437	1980.0000000	1990.0000000	0.69006556	43670.000000	10.4762	0.163
Q	22	1.45454545	6.38247058	0.0000000	30.0000000	1.36074730	32.000000	40.7359	438.795
ICOST	22	436.18181818	1805.41354282	0.0000000	8470.0000000	384.91546065	9596.000000	3259518.0606	413.913
SIZE=4									
YEAR	30	1987.00000000	4.39435374	1980.0000000	1994.000000	0.80229556	59610.000000	19.3103	0.221
Q	29	3.86206897	18.51394096	0.0000000	100.000000	3.43795253	112.000000	342.7660	479.379
ICOST	29	585.24137931	2143.81733389	0.0000000	11135.000000	398.09688481	16972.000000	4595952.7611	366.313
SIZE=5									
YEAR	11	1985.00000000	3.31662479	1980.0000000	1990.0000000	1.00000000	21835.000000	11.00000	0.167
Q	11	0.36363636	0.80903983	0.0000000	2.0000000	0.24393469	4.000000	0.65455	222.486
ICOST	11	139.09090909	330.11193694	0.0000000	1022.0000000	99.53249397	1530.000000	108973.89091	237.335

MECO: SUMMARY OF UNDERGROUND CONDUITS

DATA PERIOD = 1990 - 1994

SIZE (INCH)	INSTALLED QUANTITY (NO.)	INSTALLED COST ($)	REPLACEMENT COST ($)	AVE COSTS INSTALLED ($/FT)	AVE COSTS REPLACED ($/FT)
2	7	1,848	1,916	264.00	273.74
3	6	1,165	1,182	194.17	197.03
4	15	10,215	10,623	681.00	708.20
TOTALS AND AVERAGES	28	13,228	13,721	472.43	490.05

CUSTOMER COMPONENT, MIN. SIZE METHOD (%) = 55.88 (55.86)

MOLOKAI UG CONDUIT

MOUGC - UG CONDUITS MOLOKAI ES 1-17-95

MECO COST ANALYSIS FOR UG CONDUITS SIZE = 2 INCH

	H-W COST INDEX		INSTALLED		REPLACEMENT	UNIT COSTS	
		BASE=	QUANTITY	COST	COST	INSTALLED	REPLACED
YEAR	INDEX	1994	(NO.)	($)	($)	($/FT)	($/FT)
1991	291	1.06	2	546	578	273.00	288.95
1992	290	1.06	1	462	491	462.00	490.68
1993	299	1.03	2	252	260	126.00	129.79
1994	308	1.00	2	588	588	294.00	294.00
TOTAL FOR 4 YEARS			7	1,848	1,916	264.00	273.74

MECO COST ANALYSIS FOR UG CONDUITS SIZE = 3 INCH

	R-W COST INDEX		INSTALLED		REPLACEMENT	UNIT COSTS	
		BASE=	QUANTITY	COST	COST	INSTALLED	REPLACED
YEAR	INDEX	1994	(NO.)	($)	($)	($/FT)	($/FT)
1991	291	1.06	0	0	0	.	.
1992	290	1.06	0	0	0	.	.
1993	299	1.03	3	571	588	190.33	196.06
1994	308	1.00	3	594	594	198.00	198.00
TOTAL FOR 4 YEARS			6	1,165	1,182	194.17	197.03

MECO COST ANALYSIS FOR UG CONDUITS SIZE = 4 INCH

	H-W COST INDEX		INSTALLED		REPLACEMENT	UNIT COSTS	
		BASE=	QUANTITY	COST	COST	INSTALLED	REPLACED
YEAR	INDEX	1994	(NO.)	($)	($)	($/FT)	($/FT)
1990	296	1.04	2	3,390	3,527	1,695.00	1,763.72
1991	291	1.06	5	2,331	2,467	466.20	493.44
1992	290	1.06	2	1,718	1,825	859.00	912.32
1993	299	1.03	3	921	951	307.67	316.93
1994	308	1.00	3	1,853	1,853	617.67	617.67
TOTAL FOR 5 YEARS			15	10,215	10,623	681.00	708.20
OVERALL TOTAL			28	13,228	13,721	472.43	490.05

Maui

MECO - SUMMARY OF UNDERGROUND PRIMARY CONDUCTORS
DATA PERIOD - 1982 - 1994

TYPE	SIZE (AMPS)	INSTALLED QUANTITY (CON FT)	INSTALLED COST $	REPLACED COST ($)	UNIT COSTS INST. ($/FT)	UNIT COSTS REPL. ($/FT)
#2_ALUM15KV	118	1,350,190	5,567,347	6,183,288	4.12	4.58
#4/0_ALUM15K	210	413,850	2,109,926	2,323,537	5.10	5.61
500_MCM_ALUM	335	76,954	905,655	1,032,749	11.77	13.42
750_MCM_ALUM	513	80,643	1,115,236	1,308,280	13.83	16.22
TOTALS AND AVERAGES		1,921,637	9,698,164	10,847,854	5.05	5.65

MAUI UG PRIMARY

CUSTOMER COMPONENT, MIN. SIZE METHOD (%) = 81.70 (81.12)

zero intercept

8.50

MUGPC - Maui UG Conductor Primary 1-17-95

MECO COST ANALYSIS FOR UG PRIMARY CONDUCTOR - #2_ALUM15KV 118 AMP

	H-W COST INDEX		INSTALLED		REPLACED	UNIT COSTS	
		BASE-	QUANTITY	COST	COST	INST.	REPL.
YEAR	INDEX	1994	(FT.)	($)	($)	($/FT)	($/FT)
1982	234	1.24	116,359	361,047	375,623	3.58	3.71
1983	234	1.24	109,859	334,532	416,021	3.05	3.79
1984	230	1.27	32,501	126,013	159,434	3.88	4.91
1985	229	1.27	61,091	203,262	258,294	3.33	4.23
1986	243	1.20	78,373	286,116	342,633	3.65	4.37
1987	244	1.19	133,770	555,132	662,063	4.15	4.95
1988	244	1.19	101,590	464,266	553,694	4.57	5.45
1989	261	1.11	108,528	542,640	605,012	5.00	5.57
1990	274	1.06	97,024	485,120	515,219	5.00	5.31
1991	284	1.02	84,991	388,053	397,618	4.57	4.68
1992	284	1.02	157,999	710,490	728,002	4.50	4.61
1993	291	1.00	131,130	561,443	561,443	4.28	4.28
1994	291	1.00	136,375	608,233	608,233	4.46	4.46
TOTAL FOR 13		YEARS	1,350,190	5,567,347	6,183,288	4.12	4.58

MECO COST ANALYSIS FOR UG PRIMARY CONDUCTOR = #4/0_ALUM10K 210 AMP

	H-W COST INDEX		INSTALLED		REPLACED	UNIT COSTS	
		BASE=	QUANTITY	COST	COST	INST.	REPL.
YEAR	INDEX	1994	(FT.)	($)	($)	$/FT)	$/FT)
1982	234	1.24	67,269	248,388	308,520	3.69	4.59
1983	234	1.24	25,782	103,473	128,678	4.01	4.99
1984	230	1.27	2,280	11,783	14,909	5.17	6.54
1985	229	1.27	6,960	35,426	45,017	5.16	6.56
1986	243	1.20	19,365	90,974	108,944	4.77	5.71
1987	244	1.19	18,219	107,443	128,139	5.90	7.03
1988	244	1.19	18,034	105,872	126,265	5.87	7.00
1989	261	1.11	27,797	194,579	216,944	7.00	7.80
1990	274	1.06	38,142	266,994	283,559	7.00	7.43
1991	284	1.02	55,740	333,863	342,092	5.99	6.14
1992	284	1.02	75,215	366,726	375,765	4.88	5.00
1993	291	1.00	29,141	117,420	117,420	4.03	4.03
1994	291	1.00	30,306	127,285	127,285	4.20	4.20
TOTAL FOR 13 YEARS			413,850	2,109,926	2,323,537	5.10	5.61

VEGO COST ANALYSIS FOR UG PRIMARY CONDUCTOR = 600_KCM_ALUM 335 AMP

	H-W COST INDEX		INSTALLED		REPLACED	UNIT COSTS	
		BASE=	QUANTITY	COST	COST	INST.	REPL.
YEAR	INDEX	1994	FT.)	($)	($)	$/FT)	$/FT)
1982	234	1.24	19,437	164,690	204,807	8.47	10.54
1983	234	1.24	2,711	24,291	30,238	8.96	11.14
1984	230	1.27	6,060	48,230	61,021	7.96	10.07
1985	229	1.27	7,935	93,254	118,502	11.75	14.93
1986	243	1.20	180	1,336	1,600	7.42	8.89
1987	244	1.19	11,007	73,969	88,217	6.72	8.01
1988	244	1.19	4,803	48,424	57,752	10.08	12.02
1989	261	1.11	698	31,633	35,269	45.32	50.53
1990	274	1.06	12,053	144,636	153,610	12.00	12.74
1991	284	1.02	720	9,326	9,556	12.95	13.27
1992	284	1.02	11,004	257,292	263,634	23.38	23.96
1993	291	1.00	170	4,128	4,128	24.28	24.28
1994	291	1.00	176	4,446	4,446	25.26	25.26
TOTAL FOR 13 YEARS			76,954	905,655	1,032,749	11.77	13.42

MECO COST ANALYSIS FOR UG PRIMARY CONDUCTOR = 750_MCM_ALUM 513 AMP

	H-W COST INDEX		INSTALLED		REPLACED	UNIT COSTS	
		BASE=	QUANTITY	COST	COST	INST.	REPL.
YEAR	INDEX	1994	FT.	$	$	$/FT	$/FT
1982	234	1.24	0	0	0	.	.
1983	234	1.24	19,629	342,279	425,695	17.44	21.68
1984	230	1.27	1,632	43,605	56,423	26.69	32.76
1985	229	1.27	0	0	0	.	.
1986	241	1.20	21,492	253,498	303,572	11.79	14.12
1987	244	1.19	8,985	107,550	128,267	11.97	14.28
1988	244	1.19	9,498	108,271	129,126	11.40	13.60
1989	261	1.11	0	0	0	.	.
1990	274	1.06	0	0	0	.	.
1991	284	1.02	3,660	88,456	90,636	24.17	24.76
1992	284	1.02	15,687	171,377	175,601	10.92	11.19
TOTAL FOR 11		YEARS	80,643	1,115,236	1,308,280	13.83	16.22
OVERALL TOTAL			1,921,637	9,698,164	10,847,854	5.05	5.65

MECO: SUMMARY OF UNDERGROUND SECONDARY CONDUCTORS
DATA PERIOD = 1982 - 1994

TYPE	SIZE (AMPS)	INSTALLED QUANTITY (CON FT)	INSTALLED COST ($)	REPLACED COST ($)	UNIT COSTS INST. ($/FT)	UNIT COSTS REPL. ($/FT)
#2_TPX	111	177,184	134,465	152,838	0.76	0.86
#3/0_TPX	193	605,610	897,001	1,005,007	1.48	1.66
350_MCM_AL	301	10,210	106,008	118,383	10.38	11.59
350_TPX	301	442,737	1,149,349	1,305,244	2.60	2.95
350_MCM_CU	340	1,216	51,828	57,913	41.93	46.86
TOTALS AND AVERAGES		1,237,177	2,338,651	2,639,384	1.89	2.13

CUSTOMER COMPONENT, MIN. SIZE METHOD (%) = 40.10 (40.39)

MAUI UG SECONDARY

MECO COST ANALYSIS FOR UG SECOND CONDUCTOR - #2_TPX 111 AMP

YEAR	H-W COST INDEX	INDEX BASE= 1994	INSTALLED QUANTITY (CON FT)	INSTALLED COST ($)	REPLACED COST ($)	UNIT COSTS INST. ($/FT)	UNIT COSTS REPL. ($/FT)
1982	234	1.24	15,282	33,735	41,952	0.74	0.92
1983	234	1.24	3,015	5,228	6,501	0.58	0.72
1984	230	1.27	570	2,214	2,801	1.29	1.64
1985	229	1.27	3,387	6,605	8,393	0.65	0.83
1986	243	1.20	5,966	9,864	11,812	0.55	0.56
1987	244	1.19	4,053	5,451	6,501	0.45	0.53
1988	244	1.19	3,717	5,907	7,045	0.53	0.63
1989	261	1.11	2,259	3,953	4,407	0.58	0.65
1990	274	1.06	12,519	21,908	23,267	0.58	0.62
1991	284	1.02	3,328	15,745	16,133	1.58	1.62
1992	284	1.02	2,776	6,824	6,992	0.82	0.84
1993	291	1.00	1,106	8,348	8,348	2.52	2.52
1994	291	1.00	1,150	8,683	8,683	2.52	2.52
TOTAL FOR 13 YEARS			177,384	134,465	152,838	0.76	0.86

MECO COST ANALYSIS FOR UG SECOND CONDUCTOR - #3/0_TPX 193 AMP

	H-W COST INDEX		INSTALLED		REPLACED	UNIT COSTS	
		BASE=	QUANTITY	COST	COST	INST.	REPL.
YEAR	INDEX	1994	(CON FT)	($)	($)	($/FT)	($/FT)
1982	234	1.24	18,967	83,127	103,376	1.46	1.82
1983	234	1.24	7,462	39,745	49,426	1.78	2.21
1984	230	1.27	4,488	25,360	32,086	1.88	2.38
1985	229	1.27	10,157	46,112	58,596	1.51	1.92
1986	243	1.20	8,774	27,070	32,417	1.03	1.23
1987	244	1.19	18,544	66,326	79,102	1.19	1.42
1988	244	1.19	24,437	103,300	123,198	1.41	1.68
1989	261	1.11	22,802	102,609	114,403	1.50	1.67
1990	274	1.06	20,258	91,161	96,817	1.50	1.59
1991	284	1.02	18,570	82,933	84,977	1.49	1.53
1992	284	1.02	14,088	54,766	56,116	1.30	1.33
1993	291	1.00	16,335	83,776	83,776	1.71	1.71
1994	291	1.00	16,988	90,716	90,716	1.78	1.78
TOTAL FOR 13		YEARS	605,610	897,001	1,005,007	1.48	1.66

MECO COST ANALYSIS FOR UG SECOND CONDUCTOR - 350_MCM_AL 301 AMP

	H-W COST INDEX		INSTALLED		REPLACED	UNIT COSTS	
		BASE-	QUANTITY	COST	COST	INST.	REPL.
YEAR	INDEX	1994	(CON FT)	($)	($)	($/FT)	($/FT)
1982	234	1.24	530	2,825	3,513	5.33	6.63
1983	234	1.24	2,775	15,830	19,686	5.70	7.09
1984	230	1.27	0	0	0	.	.
1985	229	1.27	340	5,430	6,900	15.97	20.29
1986	243	1.20	548	7,229	8,657	13.19	15.80
1987	244	1.19	1,145	11,002	13,121	9.61	11.46
1988	244	1.19	180	2,179	2,599	12.11	14.44
1989	261	1.11	689	10,335	11,523	15.00	16.72
1990	274	1.06	952	14,280	15,166	15.00	15.93
1991	284	1.02	635	10,521	10,780	16.57	16.98
1992	284	1.02	315	2,447	2,507	7.77	7.96
1993	291	1.00	1,030	11,496	11,496	11.16	11.16
1994	291	1.00	1,071	12,434	12,434	11.61	11.61
TOTAL FOR 13		YEARS	10,210	106,008	118,383	10.38	11.59

MECO COST ANALYSIS FOR UG SECOND CONDUCTOR = 350_TPX 301 AMP

YEAR	H-W COST INDEX INDEX	BASE=1994	INSTALLED QUANTITY (CON FT)	INSTALLED COST ($)	REPLACED COST ($)	UNIT COSTS INST. ($/FT)	UNIT COSTS REPL. ($/FT)
1982	234	1.24	33,175	190,833	237,318	1.92	2.38
1983	234	1.24	7,246	47,713	59,335	2.19	2.73
1984	230	1.27	2,920	21,803	27,586	2.49	3.15
1985	229	1.27	6,260	50,081	63,640	2.67	3.39
1986	243	1.20	4,175	27,589	33,039	2.20	2.64
1987	244	1.19	22,903	169,427	202,063	2.47	2.94
1988	244	1.19	9,987	96,105	114,617	3.21	3.83
1989	261	1.11	12,469	124,890	139,245	3.33	3.72
1990	274	1.06	6,868	68,680	72,941	3.33	3.54
1991	284	1.02	15,716	120,889	123,869	2.56	2.63
1992	284	1.02	1,110	10,265	10,518	3.08	3.16
1993	291	1.00	12,123	108,367	108,367	2.98	2.98
1994	291	1.00	12,607	112,707	112,707	2.98	2.98
TOTAL FOR 13		YEARS	442,737	1,149,349	1,305,244	2.60	2.95

MECO COST ANALYSIS FOR UG SECOND CONDUCTOR - 350_MCM_CU 340 AMP

	R-W COST INDEX		INSTALLED		REPLACED	UNIT COSTS	
		BASE=	QUANTITY	COST	COST	INST.	REPL.
YEAR	INDEX	1994	(CON FT)	($)	($)	($/FT)	($/FT)
1982	234	1.24	0	0	0	.	.
1983	234	1.24	0	0	0	.	.
1984	230	1.27	245	9,798	12,397	39.99	50.60
1985	229	1.27	0	0	0	.	.
1986	243	1.20	0	0	0	.	.
1987	244	1.19	0	0	0	.	.
1988	244	1.19	335	14,806	17,658	44.20	52.71
1989	261	1.11	52	2,600	2,899	50.00	55.75
1990	274	1.06	85	4,437	4,712	52.20	55.44
1991	284	1.02	0	0	0	.	.
1992	284	1.02	315	2,447	2,507	7.77	7.96
1993	291	1.00	100	8,696	8,696	86.96	86.96
1994	291	1.00	104	9,044	9,044	86.96	86.96
TOTAL FOR 13 YEARS			1,236	51,828	57,913	41.93	46.86
OVERALL TOTAL			1,237,177	2,338,652	2,639,384	1.89	2.13

MECO: SUMMARY OF UNDERGROUND PRIMARY CONDUCTORS
DATA PERIOD = 1982 - 1994

TYPE	SIZE (AMPS)	INSTALLED QUANTITY (CIR FT)	INSTALLED COST ($)	REPLACED COST ($)	UNIT COSTS INST. ($/FT)	UNIT COSTS REPL. ($/FT)
#2_ALUM15KV	118	151,975	689,057	724,709	4.53	4.77
500_MCM_ALUM	335	21,694	260,328	276,480	12.00	12.74
TOTALS AND AVERAGES		173,669	949,385	1,001,188	5.47	5.76

LANAI UG PRIMARY

CUSTOMER COMPONENT, MIN. SIZE METHOD (%) = 82.94 (82.72)

Zero Intercept

7.47

LUGPC - Lanai UG Conductors Pri

Es 1-17-95

MECO COST ANALYSIS FOR U3 PRIMARY CONDUCTOR - #2_ALUM15KV 118 AMP

	H-W COST INDEX		INSTALLED		REPLACED	UNIT COSTS	
		BASE-	QUANTITY	COST	COST	INST.	REPL.
YEAR	INDEX	1994	(FT.)	($)	($)	($/FT)	($/FT)
1982	234	1.24	1,485	1,772	2,204	1.19	1.48
1983	234	1.24	0	0	0	.	.
1984	230	1.27	0	0	0	.	.
1985	229	1.27	1,876	4,733	5,954	2.26	2.87
1986	243	1.20	0	0	0	.	.
1987	244	1.19	0	0	0	.	.
1988	244	1.19	24,070	91,028	108,562	3.78	4.51
1989	261	1.11	0	0	0	.	.
1990	274	1.06	32,670	163,350	173,485	5.00	5.31
1991	284	1.02	49,067	213,766	219,037	4.36	4.46
1992	284	1.02	12,411	46,090	47,226	3.71	3.81
1993	291	1.00	14,900	81,109	81,109	5.44	5.44
1994	291	1.00	15,496	87,707	87,707	5.66	5.66
TOTAL FOR 13		YEARS	151,975	689,057	724,709	4.53	4.77

MECO COST ANALYSIS FOR UG PRIMARY CONDUCTOR = 511_XLPE_ALUM 335 AMP

YEAR	H-W COST INDEX	INDEX BASE=1994	INSTALLED QUANTITY (FT.)	INSTALLED COST ($)	REPLACED COST ($)	UNIT COSTS INST. ($/FT)	UNIT COSTS REPL. ($/FT)
1982	234	1.24	0	0	0	.	.
1983	234	1.24	0	0	0	.	.
1984	230	1.27	0	0	0	.	.
1985	229	1.27	0	0	0	.	.
1986	243	1.20	0	0	0	.	.
1987	244	1.19	0	0	0	.	.
1988	244	1.19	0	0	0	.	.
1989	261	1.11	0	0	0	.	.
1990	274	1.06	21,694	260,328	276,480	12.00	12.74
TOTAL FOR 9 YEARS			21,694	260,328	276,480	12.00	12.74
OVERALL TOTAL			173,669	949,385	1,001,188	5.47	5.76

LANAI UG SECONDARY

= SAME AS

LANAI OH SECONDARY

MOLOKAI UG PRIMARY

= SAME AS MAUI UG PRIMARY

Molokai

MECO: SUMMARY OF UNDERGROUND SECONDARY CONDUCTORS
DATA PERIOD = 1990 - 1994

TYPE	SIZE (AMPS)	INSTALLED QUANTITY (CON FT)	INSTALLED COST ($)	REPLACED COST ($)	UNIT COSTS INST. ($/FT)	UNIT COSTS REPL. ($/FT)
#3/0_TPX	133	1,368	1,641	1,649	1.20	1.21
350_TPX	301	5,937	14,987	15,121	2.52	2.55
TOTALS AND AVERAGES		7,305	16,628	16,771	2.28	2.30

CUSTOMER COMPONENT, MIN. SIZE METHOD (%) = 52.60

MOLOKAI UG SECONDARY

For Molokai UG Conductors See Es 1-19-94

MECO COST ANALYSIS FOR UG SECOND CONDUCTOR - #3/0 TPX 193 AMP

	H-W COST INDEX		INSTALLED		REPLACED	UNIT COSTS	
		BASE=	QUANTITY	COST	COST	INST.	REPL.
YEAR	INDEX	1994	(CON FT)	($)	($)	($/FT)	($/FT)
1991	284	1.02	110	242	246	2.73	2.75
1992	284	1.02	40	102	105	2.65	2.67
1993	291	1.00	153	623	623	1.38	1.38
1994	291	1.00	166	674	674	1.44	1.44
TOTAL FOR 4 YEARS			1,368	1,641	1,649	1.20	1.21

MECO COST ANALYSIS FOR 1G SECOND CONDUCTOR - 350_TFX 301 AMP

	H-W COST INDEX		INSTALLED		REPLACED	UNIT COSTS	
		BASE-	QUANTITY	COST	COST	INST.	REPL.
YEAR	INDEX	1994	(CON FT)	($)	($)	($/FT)	$/FT)
1991	284	1.02	276	1,362	1,396	1.65	1.69
1992	284	1.02	706	4,080	4,181	1.93	1.98
1993	291	1.00	490	4,587	4,587	3.12	3.12
1994	291	1.00	509	4,958	4,958	3.25	3.25
TOTAL FOR 4 YEARS			5,937	14,987	15,121	2.52	2.55
OVERALL TOTAL			7,305	16,628	16,771	2.28	2.30

TRANSFORMERS

MAUI

LANAI

MOLOKAI

All same % as in MECO Docket No. 7000

CA-IR-197

Ref: MECO-1813, Marginal Cost of Service Study.

Please provide a complete copy of the Company's most recently performed Marginal Cost Study, including supporting workpapers for all marginal cost study results reflected in MECO-1813, including electronic excel files for all such data.

MECO Response:

A copy of MECO's Marginal Cost Study is attached. Pages 24-148 are voluminous and available for inspection at HECO's Regulatory Affairs Division office, Suite 1301, Central Pacific Plaza, 220 South King Street, Honolulu, Hawaii. Please contact Dean Matsuura at 543-4622 to make arrangements to inspect the documents. Electronic copies of the requested information are being provided.

MAUI ELECTRIC COMPANY, INC.
DOCKET NO. 2006-0386, TEST-YEAR 2007
MARGINAL COST STUDY

MARGINAL ENERGY COSTS BY TIME-OF-USE RATING PERIOD

YEAR	Priority Peak (A)	Mid-Peak (B)	Off-Peak (C)	TOTAL (D)
		Transmission Voltage Service (¢/kWh)		
2007	19.78	19.62	18.47	19.15
2008	15.22	14.95	14.14	14.64
2009	14.63	14.32	13.61	14.05
2010	14.18	13.76	13.08	13.53
2011	13.67	13.44	12.83	13.21
		Primary Voltage Service (¢/kWh)		
2007	21.06	20.77	19.18	20.12
2008	16.19	15.81	14.68	15.37
2009	15.55	15.13	14.12	14.75
2010	15.07	14.53	13.58	14.19
2011	14.52	14.19	13.31	13.85
		Secondary Voltage Service (¢/kWh)		
2007	21.29	20.97	19.31	20.30
2008	16.37	15.96	14.78	15.50
2009	15.72	15.28	14.21	14.87
2010	15.23	14.67	13.66	14.30
2011	14.67	14.32	13.39	13.96
Average	16.65	16.24	15.07	15.79

ECALLYRS

MAUI ELECTRIC COMPANY, LIMITED
MARGINAL ENERGY COSTS
2007 Update
2007 - 2011

YEAR	Priority Peak	Shoulder Peak	Off-Peak
		(Cents per kWh)	
	(1)	(2)	(3)
		Transmission	
2007	19.78	19.62	18.47
2008	15.22	14.95	14.14
2009	14.63	14.32	13.61
2010	14.18	13.76	13.08
2011	13.67	13.44	12.83
		Primary	
2007	21.06	20.77	19.18
2008	16.19	15.81	14.68
2009	15.55	15.13	14.12
2010	15.07	14.53	13.58
2011	14.52	14.19	13.31
		Secondary	
2007	21.29	20.97	19.31
2008	16.37	15.96	14.78
2009	15.72	15.28	14.21
2010	15.23	14.67	13.66
2011	14.67	14.32	13.39

SOURCE: See worksheets for annual energy costs (Energy2007 -- Energy2011).

ENERGY2007

MAUI ELECTRIC COMPANY, LIMITED
ESTIMATED MARGINAL ENERGY COSTS BY COSTING PERIOD FOR 2007
2007 Update

		Priority Peak	Shoulder	Off-Peak	Annual
		(1)	(2)	(3)	(4)
(1)	Marginal Running Cost (2007 cents/kWh) Excluding Variable O&M Expenses	14.52549	14.51027	13.84598	14.23529
(2)	Variable O&M Expenses (2007 cents/kWh)	2.41318	2.41318	2.41318	2.41318
(3)	A&G Loading for Variable O&M (2) x 43.31%	1.045	1.045	1.045	1.045
(4)	Incremental Cost of Fuel Stock (2007 cents/kWh)	1.268798	1.268798	1.268798	1.268798
(5)	Cash Working Capital {[(2)+(3)] x -1.17%} + {(1) x 4.32%}	0.586704	0.586047	0.557359	0.574172
(6)	Revenue Requirements for Working Capital [(4)+(5)] x 13.09%	0.242885	0.242799	0.239044	0.241245
(7)	Marginal Energy Cost (2007 cents/kWh) (1) + (2) + (3) + (6)	18.226556	18.211250	17.543205	17.934716
	Marginal Energy Loss Factor for Service to:				
(8)	Transmission	1.08543	1.07756	1.05265	1.06795
(9)	Primary	1.15538	1.14024	1.09345	1.12199
(10)	Secondary	1.16813	1.15159	1.10068	1.13169
	Marginal Energy Cost Including Losses to:				
(11)	Transmission (7) x (8) (2007 cents/kWh)	19.78	19.62	18.47	19.15
(12)	Primary (7) x (9) (2007 cents/kWh)	21.06	20.77	19.18	20.12
(13)	Secondary (7) x (10) (2007 cents/kWh)	21.29	20.97	19.31	20.30

Source : Line (1): See workpaper "Maui TY2007 2007-11LdRC_MGC_HrLoad for CA-IR-197.xls"
Line (2): See workpaper "Simple Cycle GE LM2500 Unit Information Form
Line (3): See worksheet for "A&G Loading Factor".
Line (4): See worksheet for "Electric Fuel Inventory Cost" (FUELSTOCK).
Line (5): See worksheet for "Derivation of Estimated Cash Working Capital Requirements".
Line (6): See worksheet for "Derivation of Revenue Requirement for Working Capital Factor".
Line (8)-(10): Marginal Energy Loss Study. See attached Excel printout.

ENERGY2008

MAUI ELECTRIC COMPANY, LIMITED
ESTIMATED MARGINAL ENERGY COSTS BY COSTING PERIOD FOR 2008
2007 Update

		Priority Peak	Shoulder	Off-Peak	Annual
		(1)	(2)	(3)	(4)
(1)	Marginal Running Cost (2007 cents/kWh) Excluding Variable O&M Expenses	10.36390	10.21239	9.76612	10.04452
(2)	Variable O&M Expenses (2007 cents/kWh)	2.41318	2.41318	2.41318	2.41318
(3)	A&G Loading for Variable O&M (2) x 43.31%	1.045	1.045	1.045	1.045
(4)	Incremental Cost of Fuel Stock (2007 cents/kWh)	1.268798	1.268798	1.268798	1.268798
(5)	Cash Working Capital {[(2)+(3)] x -1.17%} + {(1) x 4.32%}	0.406981	0.400438	0.381165	0.393188
(6)	Revenue Requirements for Working Capital [(4)+(5)] x 13.09%	0.219359	0.218503	0.215980	0.217554
(7)	Marginal Energy Cost (2007 cents/kWh) (1) + (2) + (3) + (6)	14.041437	13.889069	13.440280	13.720252
	Marginal Energy Loss Factor for Service to:				
(8)	Transmission	1.08420	1.07641	1.05215	1.06707
(9)	Primary	1.15301	1.13804	1.09254	1.12033
(10)	Secondary	1.16554	1.14918	1.09969	1.12989
	Marginal Energy Cost Including Losses to:				
(11)	Transmission (7) x (8) (2007 cents/kWh)	15.22	14.95	14.14	14.64
(12)	Primary (7) x (9) (2007 cents/kWh)	16.19	15.81	14.68	15.37
(13)	Secondary (7) x (10) (2007 cents/kWh)	16.37	15.96	14.78	15.50

Source : Line (1): See workpaper "Maui TY2007 2007-11LdRC_MGC_HrLoad for CA-IR-197.xls"
Line (2): See workpaper "Simple Cycle GE LM2500 Unit Information Form
Line (3): See worksheet for "A&G Loading Factor".
Line (4): See worksheet for "Electric Fuel Inventory Cost".
Line (5): See worksheet for "Derivation of Estimated Cash Working Capital Requirements".
Line (6): See worksheet for "Derivation of Revenue Requirement for Working Capital Factor".
Line (8)-(10): Marginal Energy Loss Study. See attached Excel printout.

ENERGY2009

MAUI ELECTRIC COMPANY, LIMITED
ESTIMATED MARGINAL ENERGY COSTS BY COSTING PERIOD FOR 2009
2007 Update

		Priority Peak	Shoulder	Off-Peak	Annual
		(1)	(2)	(3)	(4)
(1)	Marginal Running Cost (2007 cents/kWh) Excluding Variable O&M Expenses	9.83543	9.64042	9.26750	9.50827
(2)	Variable O&M Expenses (2007 cents/kWh)	2.41318	2.41318	2.41318	2.41318
(3)	A&G Loading for Variable O&M (2) x 43.31%	1.045	1.045	1.045	1.045
(4)	Incremental Cost of Fuel Stock (2007 cents/kWh)	1.268798	1.268798	1.268798	1.268798
(5)	Cash Working Capital {[(2)+(3)] x -1.17%} + {(1) x 4.32%}	0.384158	0.375736	0.359632	0.370030
(6)	Revenue Requirements for Working Capital [(4)+(5)] x 13.09%	0.216372	0.215270	0.213161	0.214523
(7)	Marginal Energy Cost (2007 cents/kWh) (1) + (2) + (3) + (6)	13.509979	13.313866	12.938846	13.180978
	Marginal Energy Loss Factor for Service to:				
(8)	Transmission	1.08318	1.07553	1.05154	1.06629
(9)	Primary	1.15104	1.13637	1.09141	1.11886
(10)	Secondary	1.16339	1.14736	1.09847	1.12829
	Marginal Energy Cost Including Losses to:				
(11)	Transmission (7) x (8) (2007 cents/kWh)	14.63	14.32	13.61	14.05
(12)	Primary (7) x (9) (2007 cents/kWh)	15.55	15.13	14.12	14.75
(13)	Secondary (7) x (10) (2007 cents/kWh)	15.72	15.28	14.21	14.87

Source : Line (1): See workpaper "Maui TY2007 2007-11LdRC_MGC_HrLoad for CA-IR-197.xls"
Line (2): See workpaper "Simple Cycle GE LM2500 Unit Information Form
Line (3): See worksheet for "A&G Loading Factor".
Line (4): See worksheet for "Electric Fuel Inventory Cost".
Line (5): See worksheet for "Derivation of Estimated Cash Working Capital Requirements".
Line (6): See worksheet for "Derivation of Revenue Requirement for Working Capital Factor".
Line (8)-(10): Marginal Energy Loss Study. See attached Excel printout.

ENERGY2010

MAUI ELECTRIC COMPANY, LIMITED
ESTIMATED MARGINAL ENERGY COSTS BY COSTING PERIOD FOR 2010
2007 Update

		Priority Peak	Shoulder	Off-Peak	Annual
		(1)	(2)	(3)	(4)
(1)	Marginal Running Cost (2007 cents/kWh) Excluding Variable O&M Expenses	9.43062	9.13453	8.77949	9.02188
(2)	Variable O&M Expenses (2007 cents/kWh)	2.41318	2.41318	2.41318	2.41318
(3)	A&G Loading for Variable O&M (2) x 43.31%	1.045	1.045	1.045	1.045
(4)	Incremental Cost of Fuel Stock (2007 cents/kWh)	1.268798	1.268798	1.268798	1.268798
(5)	Cash Working Capital {[(2)+(3)] x -1.17%} + {(1) x 4.32%}	0.366676	0.353889	0.338556	0.349024
(6)	Revenue Requirements for Working Capital [(4)+(5)] x 13.09%	0.214084	0.212410	0.210403	0.211773
(7)	Marginal Energy Cost (2007 cents/kWh) (1) + (2) + (3) + (6)	13.102886	12.805118	12.448074	12.691834
	Marginal Energy Loss Factor for Service to:				
(8)	Transmission	1.08254	1.07485	1.05107	1.06571
(9)	Primary	1.14981	1.13507	1.09055	1.11776
(10)	Secondary	1.16204	1.14594	1.09753	1.12709
	Marginal Energy Cost Including Losses to:				
(11)	Transmission (7) x (8) (2007 cents/kWh)	14.18	13.76	13.08	13.53
(12)	Primary (7) x (9) (2007 cents/kWh)	15.07	14.53	13.58	14.19
(13)	Secondary (7) x (10) (2007 cents/kWh)	15.23	14.67	13.66	14.30

Source : Line (1): See workpaper "Maui TY2007 2007-11LdRC_MGC_HrLoad for CA-IR-197.xls"
Line (2): See workpaper "Simple Cycle GE LM2500 Unit Information Form
Line (3): See worksheet for "A&G Loading Factor".
Line (4): See worksheet for "Electric Fuel Inventory Cost".
Line (5): See worksheet for "Derivation of Estimated Cash Working Capital Requirements".
Line (6): See worksheet for "Derivation of Revenue Requirement for Working Capital Factor".
Line (8)-(10): Marginal Energy Loss Study. See attached Excel printout.

ENERGY2011

MAUI ELECTRIC COMPANY, LIMITED
ESTIMATED MARGINAL ENERGY COSTS BY COSTING PERIOD FOR 2011
2007 Update

		Priority Peak	Shoulder	Off-Peak	Annual
		(1)	(2)	(3)	(4)
(1)	Marginal Running Cost (2007 cents/kWh) Excluding Variable O&M Expenses	8.96962	8.84440	8.54369	8.73398
(2)	Variable O&M Expenses (2007 cents/kWh)	2.41318	2.41318	2.41318	2.41318
(3)	A&G Loading for Variable O&M (2) x 43.31%	1.045	1.045	1.045	1.045
(4)	Incremental Cost of Fuel Stock (2007 cents/kWh)	1.268798	1.268798	1.268798	1.268798
(5)	Cash Working Capital {[(2)+(3)] x -1.17%} + {(1) x 4.32%}	0.346767	0.341359	0.328373	0.336590
(6)	Revenue Requirements for Working Capital [(4)+(5)] x 13.09%	0.211478	0.210770	0.209070	0.210145
(7)	Marginal Energy Cost (2007 cents/kWh) (1) + (2) + (3) + (6)	12.639280	12.513354	12.210942	12.402301
	Marginal Energy Loss Factor for Service to:				
(8)	Transmission	1.08185	1.07419	1.05064	1.06514
(9)	Primary	1.14848	1.13382	1.08974	1.11669
(10)	Secondary	1.16059	1.14458	1.09666	1.12592
	Marginal Energy Cost Including Losses to:				
(11)	Transmission (7) x (8) (2007 cents/kWh)	13.67	13.44	12.83	13.21
(12)	Primary (7) x (9) (2007 cents/kWh)	14.52	14.19	13.31	13.85
(13)	Secondary (7) x (10) (2007 cents/kWh)	14.67	14.32	13.39	13.96

Source : Line (1): See workpaper "Maui TY2007 2007-11LdRC_MGC_HrLoad for CA-IR-197.xls"
Line (2): See workpaper "Simple Cycle GE LM2500 Unit Information Form
Line (3): See worksheet for "A&G Loading Factor".
Line (4): See worksheet for "Electric Fuel Inventory Cost".
Line (5): See worksheet for "Derivation of Estimated Cash Working Capital Requirements".
Line (6): See worksheet for "Derivation of Revenue Requirement for Working Capital Factor".
Line (8)-(10): Marginal Energy Loss Study. See attached Excel printout.

RUNCOST

MAUI ELECTRIC COMPANY, LIMITED
MARGINAL RUNNING COSTS 1997-2001
2007 Update

Year	Priority Pk	Shoulder Pk	Off-Peak	Annual	CPI - U	Inflation	Deflator [1]	Priority Peak	Shoulder	Off-Peak	Annual
	(¢/KWH)				(Honolulu)		(2007=100)	(2007 ¢/kwh)			
	(1)	(2)	(3)	(4)	(5)	(6)	(7) (5)/(5)*	(8) (1)/(7)x100	(9) (2)/(7)x100	(10) (3)/(7)x100	(11) (4)/(7)x100
2007	14.52549	14.51027	13.84598	14.23529	208.7	3.51%	100.0	14.52549	14.51027	13.84598	14.23529
2008	10.72767	10.57084	10.10891	10.39708	216.0	3.51%	103.5	10.36390	10.21239	9.76612	10.04452
2009	10.53799	10.32905	9.92950	10.18747	223.6	3.51%	107.1	9.83543	9.64042	9.26750	9.50827
2010	10.45893	10.13055	9.73680	10.00562	231.4	3.51%	110.9	9.43062	9.13453	8.77949	9.02188
2011	10.29782	10.15406	9.80882	10.02728	239.6	3.52%	114.8	8.96962	8.84440	8.54369	8.73398

NOTE: Costing periods are defined as follows:

Priority Peak: 5:01 p.m. to 9:00 p.m., weekdays.
Shoulder Peak: 7:01 a.m. to 5:00 p.m., weekdays,
7:01 a.m. to 9:00 p.m., weekends.
Off-Peak: 9:01 p.m. to 7:00 a.m., daily.

[1] : (5)* = (5) of 2007.

Source : Col. (1)-(4): Based on production simulation data for 2007-2011. (See attachments)
Col. (5): 2007 figure is derived by escalating 2006 Honolulu CPI-U (201.6) by rate of Inflation (Col.(6)).
Col. (6): See inflation rate worksheet.

FUELSTOCK

MAUI ELECTRIC COMPANY, LIMITED
COST OF FUEL STOCK PER KWH
2007 Update

		2007
(1)	Value of 30 Day Supply (2007 Dollar)	$13,668,751
(2)	Gross Annual Generation (MWH)	1,291,513
(3)	Purchased Power	214,214
(4)	Net MECO Generation (MWH) (2)-(3)	1,077,299
(5)	Value of 30 Day Supply per kWh (1)/(4) (Cents/kWh)	1.268798

SOURCE: Line (1): See MECO-WP-404, Pgs. 2, 4.

Line (2), (3): See MECO-WP-404 Pg. 2

MAUI ELECTRIC COMPANY, LIMITED
LOADING FACTORS FOR ADMINISTRATIVE AND GENERAL EXPENSES AND SOCIAL SECURITY AND UNEMPLOYMENT TAXES AND GENERAL PLANT
1997

	Loading Factors For Administrative And General Expenses And Social Security And Unemployment Taxes	Estimate
(1)	Applicable to Nonplant-Related Expenses [1]	43.31%
(2)	Applicable to Plant-Related Expenses [2]	0.54%
	General Plant	
(3)	Loading Factor For General Plant [3]	4.79%

[1] The result of a regression analysis of the following accounts

920	Administrative and General Salaries
921	Office Supplies and Expenses
922	Administrative Expenses Transferred-Cr
925	Injuries and Damages
926	Employee Pensions and Benefits
929	Duplicate Charges-Cr
930.1	General Advertising Expenses
930.2	Miscellaneous General Expenses
	Social Security and Unemployment Insurance Taxes

and Total Operation and Maintenance Expenses Excluding Fuel, Purchased Power and Administrative and General Expenses, all in constant dollars.

[2] The result of a regression analysis of the following accounts

923	Outside Services Employed
924	Property Insurance
927	Franchise Requirements
928	Regulatory Commission Expenses
931	Rents
932	Maintenance of General Plant

and additions to Total Gross Plant, all in constant dollars.

[3] The result of a regression analysis of additions to general plant and additions to total electric plant in service less general plant, all in constant dollars.

Source: Based on MECO Loading Factor Regression Analysis.
See attached workpapers (SAS printouts).

MAUI ELECTRIC COMPANY, LIMITED
DERIVATION OF ESTIMATED
CASH WORKING CAPITAL REQUIREMENTS
2007

	Expense/Revenue	Lead/ Lag Days	2007 Expense	Lead/Lag Day Dollars	Weighted Lead/ Lag Days	Used in Study
			(Thousand Dollars)			
		(a)	(b)	(a) x (b) (c)	(d)	(e)
(1)	Revenues	36.0	$333,075	$11,990,700	36.0	
(2)	Fuel	16.0	$166,525	$2,664,400		
(3)	Purchased Power	41.0	$33,982	$1,393,262		
(4)	Total Fuel and Purchased Power		$200,507	$4,057,662		
(5)	Weighted Average (4c)/(4b)				20.2	
(6)	Net Lag Days (1)-(4)				15.8	
(7)	Cash Working Capital Factor for Fuel and Purchased Power (6)/365					4.32%
(8)	Payroll	12.0	$16,451	$197,412		
(9)	Health and Life Benefits	28.0	$0	$0		
(10)	Other O & M	28.0	$28,809	$806,652		
	Taxes Other Than Income Taxes					
(11)	Property	28.0	$0	$0		
(12)	Excise	28.0	$0	$0		
(13)	FICA	28.0	$0	$0		
(14)	Other Non-Payroll	28.0	$0	$0		
(15)	Revenue Taxes	68.0	$29,665	$2,017,220		
	Income Taxes					
(16)	Current FIT	40.0	$0	$0		
(17)	Current SIT	40.0	$10,305	$412,200		
(18)	Total		$85,230	$3,433,484		
(19)	Weighted Average (18c)/(18b)				40.3	
(20)	Net Lag Days (19)-(1)				(4.3)	
(21)	Cash Working Capital Factor for Other Costs (20)/365	Marginal Cost Inputs, See Requested Numbers, Long-Term General				-1.17%

Col. (a): Lead/Lag Days Study.
Col. (b): 1995 FERC Form 1, pp. 262, 300, 320, 321, 323 and 355.
Line (1): FERC Form 1, pp. 300, line 27 less line 26.
Line (2): FERC Form 1, pp. 320-321, Acct. #501 and 547.
Line (3): FERC Form 1, pp. 321, Acct. #555.
Line (8): FERC Form 1, pp. 355, Line #96, Column (b).
Line (9): FERC Form 1, pp. 323, Account #925 and 926.
Line (10): FERC Form 1, pp. 323, Total O&M Expenses - Line (2), (3), (8) and (9).
Line (11)-(17): FERC Form 1, pp. 262, Column (d).

MAUI ELECTRIC COMPANY, LIMITED
DERIVATION OF REVENUE REQUIREMENT
FOR WORKING CAPITAL FACTOR
2007

I. Derivation of Overall Return:

		Incremental Capital Structure		Incremental Cost of Capital		Weighted Cost of Capital
(1)	Short-Term Debt	1.27 %	x	5.00 %	=	0.0635 %
(2)	Long-Term Debt	40.15 %	x	6.11 %	=	2.4532 %
(3)	Preferred	3.69 %	x	7.70 %	=	0.2842 %
(4)	Common Equity	54.89 %	x	11.25 %	=	6.1751 %
(5)	Overall Return = Composite Incremental Cost of Capital =					8.9760 %

II. Derivation of Income Tax Component:

$$\text{Income Tax Component} = \frac{\text{Tax Rate}}{1 - \text{Tax Rate}} \times (\text{Cost of Preferred} + \text{Cost of Common Equity})$$

(6) $= \frac{38.91\%}{61.09\%} \times (0.28\% + 6.18\%) = 4.11\ \%$

III. Derivation of Revenue Requirement for Working Capital Factor:

(7)	Overall Return	=	8.98 %
(8)	Income Tax Component	=	4.11 %
(9)	Revenue Requirement for Working Capital Factor	=	13.09 %

Source: Revenue Requirments Worksheet

MAUI ELECTRIC COMPANY, INC.
DOCKET NO. 2006-0387, TEST-YEAR 2007
MARGINAL COST STUDY
SUMMARY OF SYSTEM LOSSES

	Demand			Energy		
	Max Dmd (MW) (A)	% Losses (B)	Volt Level % Losses (C)	Load Losses (GWH) (D)	% Losses (E)	Volt Level Losses (F)
MECO Gross Generation	187.55			1,100.97		
MECO Auxiliary Loss	3.91	2.13%		20.45	1.89%	
Delivered to HECO Generator Step UP	183.64			1,080.52		
MECO Generator Step UP Loss	1.08	0.59%		5.09	0.47%	
MECO Generation Delivered to 138 kV	182.56			1,075.43		
IPP Generation Delivered to 138 kV	26.25			215.43		
Delivered to 138 kV Transmission	208.81			1,290.86		
138 kV Transmission Loss	0.00	0.00%		0.00	0.00%	
Delivered to 69/23 kV Transmission	208.81			1,290.86		
69 kV Transformation Loss	3.18	1.55%		14.95	1.17%	
Delivered to 23 kV Subtransmission	205.63			1,275.91		
Feed-back from Others	0.00			0.00		
23 kV Subtransmission Loss	1.83	0.90%		8.60	0.68%	
Delivered to 69/23 kV Distribution Substation	203.80			1,267.31		
Transformation Loss	1.46	0.72%		6.86	0.54%	
Transmission Losses			6.02%			4.83%
Delivered to Distribution Lines	202.34			1,260.45		
Distribution Lines Loss	6.96	3.56%		32.70	2.66%	
Delivered to Distribution/Secondary Transformation	195.38			1,227.74		
Distribution/Secondary Transformation Loss	1.53	0.79%		7.18	0.59%	
Primary Losses			4.38%			8.26%
Delivered to Secondary	193.85			1,220.56		
Secondary Loss	1.38	0.72%		6.51	0.54%	
Secondary Losses			0.72%			8.84%
Delivered to Customer	192.47			1,214.050		

Source:
Col. (A) - HECO System Loss Analysis. Prepared by T&D Planning Dept.
Cols. (B), (D) - Calculated as loss divided by amount delivered to next level.
Cols. (C), (E) - Cumulative losses from the level above to this level. Calculated as [{(1+Col. B) x (1+Col. B) x ...] -1}

MAUI ELECTRIC COMPANY, INC.
DOCKET NO. 2006-0387, TEST-YEAR 2007
MARGINAL COST STUDY
CALCULATION OF MARGINAL ENERGY LOSS FACTORS BY VOLTAGE LEVEL
2007

		Priority Peak Period			Mid-Peak Period			Off-Peak Period			Annual		
		Sec Voltage (A)	Pri Voltage (B)	Trans Volt (C)	Sec Voltage (A)	Pri Voltage (B)	Trans Volt (C)	Sec Voltage (A)	Pri Voltage (B)	Trans Volt (C)	Sec Voltage (A)	Pri Voltage (B)	Trans Volt (C)
L1	Losses	8.84%	8.26%	4.83%	8.84%	8.26%	4.83%	8.84%	8.26%	4.83%	8.84%	8.26%	4.83%
L2	Hourly Load (MW)	182.3	182	182	166.8	167	167	115.9	116	116	147.4	147	147
L3	2007 System Peak Load (MW)	224.0	224	224	224	224	224	224	224	224	224	224	224
L4	Marginal Energy Loss Factor	1.1681	1.1554	1.0854	1.1516	1.1402	1.0776	1.1007	1.0935	1.0526	1.1317	1.1220	1.0680

Source:
L1 - See wp Summary of System Losses.
L2-L3 : Sample values.
L4 = 1 + [{(2 x Losses x Period Load as % of System Peak Load)} / {1 - (2 x Losses x Period Load as % of System Peak Load)}]

CA-IR-197
DOCKET NO. 2006-0387
PAGE 15 OF 148

MAUI ELECTRIC COMPANY, INC.
DOCKET NO. 2006-0387, TEST-YEAR 2007
MARGINAL COST STUDY
CALCULATION OF MARGINAL ENERGY LOSS FACTORS BY VOLTAGE LEVEL
2008

		Priority Peak Period			Mid-Peak Period			Off-Peak Period			Annual		
		Sec Voltage (A)	Pri Voltage (B)	Trans Volt (C)	Sec Voltage (A)	Pri Voltage (B)	Trans Volt (C)	Sec Voltage (A)	Pri Voltage (B)	Trans Volt (C)	Sec Voltage (A)	Pri Voltage (B)	Trans Volt (C)
L1	Losses	8.84%	8.26%	4.83%	8.84%	8.26%	4.83%	8.84%	8.26%	4.83%	8.84%	8.26%	4.83%
L2	Hourly Load (MW)	186.0	186	186	170.0	170	170	118.7	119	119	150.5	151	151
L3	2007 System Peak Load (MW)	231.5	232	232	232	232	232	232	232	232	232	232	232
L4	Marginal Energy Loss Factor	1.1655	1.1530	1.0842	1.1492	1.1380	1.0764	1.0997	1.0925	1.0522	1.1299	1.1203	1.0671

Source:
L1 - See wp Summary of System Losses.
L2-L3 : Sample values.
L4 = 1 + [{(2 x Losses x Period Load as % of System Peak Load)} / {1 - (2 x Losses x Period Load as % of System Peak Load)}]

MAUI ELECTRIC COMPANY, INC.
DOCKET NO. 2006-0387, TEST-YEAR 2007
MARGINAL COST STUDY
CALCULATION OF MARGINAL ENERGY LOSS FACTORS BY VOLTAGE LEVEL
2009

		Priority Peak Period			Mid-Peak Period			Off-Peak Period			Annual		
		Sec Voltage (A)	Pri Voltage (B)	Trans Volt (C)	Sec Voltage (A)	Pri Voltage (B)	Trans Volt (C)	Sec Voltage (A)	Pri Voltage (B)	Trans Volt (C)	Sec Voltage (A)	Pri Voltage (B)	Trans Volt (C)
L1	Losses	8.84%	8.26%	4.83%	8.84%	8.26%	4.83%	8.84%	8.26%	4.83%	8.84%	8.26%	4.83%
L2	Hourly Load (MW)	190.0	190	190	173.8	174	174	121.3	121	121	153.8	154	154
L3	2007 System Peak Load (MW)	239.2	239	239	239	239	239	239	239	239	239	239	239
L4	Marginal Energy Loss Factor	1.1634	1.1510	1.0832	1.1474	1.1364	1.0755	1.0985	1.0914	1.0515	1.1283	1.1189	1.0663

Source:
L1 - See wp Summary of System Losses.
L2-L3 : Sample values.
L4 = 1 + [{(2 x Losses x Period Load as % of System Peak Load)} / {1 - (2 x Losses x Period Load as % of System Peak Load)}]

MAUI ELECTRIC COMPANY, INC.
DOCKET NO. 2006-0387, TEST-YEAR 2007
MARGINAL COST STUDY
CALCULATION OF MARGINAL ENERGY LOSS FACTORS BY VOLTAGE LEVEL
2010

		Priority Peak Period			Mid-Peak Period			Off-Peak Period			Annual		
		Sec Voltage (A)	Pri Voltage (B)	Trans Volt (C)	Sec Voltage (A)	Pri Voltage (B)	Trans Volt (C)	Sec Voltage (A)	Pri Voltage (B)	Trans Volt (C)	Sec Voltage (A)	Pri Voltage (B)	Trans Volt (C)
L1	Losses	8.84%	8.26%	4.83%	8.84%	8.26%	4.83%	8.84%	8.26%	4.83%	8.84%	8.26%	4.83%
L2	Hourly Load (MW)	195.6	196	196	178.6	179	179	124.6	125	125	158.2	158	158
L3	2007 System Peak Load (MW)	248.0	248	248	248	248	248	248	248	248	248	248	248
L4	Marginal Energy Loss Factor	1.1620	1.1498	1.0825	1.1459	1.1351	1.0749	1.0975	1.0905	1.0511	1.1271	1.1178	1.0657

Source:
L1 - See wp Summary of System Losses.
L2-L3 : Sample values.
L4 = 1 + [{(2 x Losses x Period Load as % of System Peak Load)} / {1 - (2 x Losses x Period Load as % of System Peak Load)}]

MAUI ELECTRIC COMPANY, INC.
DOCKET NO. 2006-0387, TEST-YEAR 2007
MARGINAL COST STUDY
CALCULATION OF MARGINAL ENERGY LOSS FACTORS BY VOLTAGE LEVEL
2011

		Priority Peak Period			Mid-Peak Period			Off-Peak Period			Annual		
		Sec Voltage (A)	Pri Voltage (B)	Trans Volt (C)	Sec Voltage (A)	Pri Voltage (B)	Trans Volt (C)	Sec Voltage (A)	Pri Voltage (B)	Trans Volt (C)	Sec Voltage (A)	Pri Voltage (B)	Trans Volt (C)
L1	Losses	8.84%	8.26%	4.83%	8.84%	8.26%	4.83%	8.84%	8.26%	4.83%	8.84%	8.26%	4.83%
L2	Hourly Load (MW)	199.0	199	199	181.7	182	182	126.8	127	127	160.9	161	161
L3	2007 System Peak Load (MW)	254.3	254	254	254	254	254	254	254	254	254	254	254
L4	Marginal Energy Loss Factor	1.1606	1.1485	1.0819	1.1446	1.1338	1.0742	1.0967	1.0897	1.0506	1.1259	1.1167	1.0651

Source:
L1 - See wp Summary of System Losses.
L2-L3 : Sample values.
L4 = 1 + [{(2 x Losses x Period Load as % of System Peak Load)} / {1 - (2 x Losses x Period Load as % of System Peak Load)}]

HAWAIIAN ELECTRIC COMPANY, INC.
DOCKET NO. 2006-0386, TEST-YEAR 2007
MARGINAL COST STUDY

Honolulu-CPI

YEAR	INFLATION	CPI BASE = 2003	Hon CPI BASE= 1982-1984
1995	2.2%	91.1	168.1
1996	2.0%	92.5	170.7
1997	1.0%	93.2	171.9
1998	0.0%	93.0	171.5
1999	1.0%	93.9	173.3
2000	2.0%	95.6	176.3
2001	1.0%	96.7	178.4
2002	1.0%	97.7	180.3
2003	2.0%	100.0	184.5
2004	3.0%	103.0	190.0
2005	3.0%	106.1	195.7
2006	3.0%	109.3	201.6 ✓
2007	3.0%	112.5	207.6
2008	3.0%	115.9	213.8
2009	3.0%	119.3	220.2
2010	3.0%	122.9	226.8
2011	3.0%	126.6	233.6

File: INFLATION-US

HAWAIIAN ELECTRIC COMPANY, INC.
MARGINAL COST STUDY UPDATE
TEST YEAR 1997

Year	GDP Deflator 1987=100	Inflation
1994		
1995	1.287	
1996		2.58%
1997		2.58%
1998		2.58%
1999		2.58%
2000	1.462	2.58%
2001		3.34%
2002		3.34%
2003		3.34%
2004		3.34%
2005	1.723	3.34%
2006		3.51%
2007		3.51% ✓
2008		3.51% ✓
2009		3.51% ✓
2010	2.047	3.51% ✓
2011		3.52% ✓
2012		3.52%
2013		3.52%
2014		3.52%
2015	2.433	3.52%

Source:/ Energy Information Administration: Annual Energy Outlook, 1996
Table C-20, Page 232

Notes: 1996-2000 Inflation calculated: ((Year 2000 GDP deflator/ Year 1995 GDP deflator) ^ (1/5) -1)
2001-2005 Inflation calculated: ((Year 2005 GDP deflator/ Year 2001 GDP deflator) ^ (1/5) -1)

HAWAIIAN ELECTRIC COMPANY, INC.
DOCKET NO. 2006-0386, TEST-YEAR 2007
MARGINAL COST STUDY
DEVELOPMENT OF ANNUAL LABOR COST

YEAR	WAGE INCREASE Wtd % Incr	TY 2005 Wage Index (2003 = 100)
1973	7.00%	
1974	7.00%	
1975	7.00%	30.66
1976	6.00%	32.50
1977	5.60%	34.32
1978	6.00%	36.38
1979	6.30%	38.67
1980	8.20%	41.84
1981	8.70%	45.48
1982	7.00%	48.66
1983	7.20%	52.17
1984	8.20%	56.44
1985	3.00%	58.14
1986	3.40%	60.11
1987	3.30%	62.10
1988	2.40%	63.59
1989	2.80%	65.37
1990	3.00%	67.33
1991	2.50%	69.01
1992	3.51%	71.43
1993	4.25%	74.47
1994	4.25%	77.64
1995	4.25%	80.93
1996	4.04%	84.20
1997	3.00%	86.73
1998	3.00%	89.33
1999	2.00%	91.12
2000	2.04%	92.98
2001	2.29%	95.11
2002	2.50%	97.48
2003	2.58%	100.00

Table 1
Simple Cycle GE LM2500 Unit Information Form

Utility: MECO
Unit Type: Simple Cycle GE LM2500
Fuel Type: No. 2 Fuel Oil

UNIT INFORMATION FORM

MECO IRP-3

Date: November 22, 2005
By: Black & Veatch
Supersedes: November 21, 2005

Unit Ratings:

		Gross	Net
Normal Top Load	MW	21.53	21.18
Minimum	MW	5.41	5.22

Ambient Conditions:

Dry Bulb Temperature	F	86
Relative Humidity	percent	70
CTG Inlet Air Temperature	F	86
Site Elevation	feet	340

Operating Mode:

Duty Cycle		Peaking
Capacity Factor	percent	20

Commercial Service:

Date Available	month/year	
Service Life	years	30

Lead Time (Prior to Commercial Oper):

		Normal	Expedited
Permitting	months	60	
Engineering	months	23	
Procurement	months	22	
Construction	months	7	

Year Dollars:	month/year	July 2005
Capital Cost Uncertainty:	plus/minus	+10%/-10%

Capital Cost (without AFUDC):

	$million	$/kW$_{gross}$	$/kW$_{net}$
A1. Simple Cycle Power Block, Ph 1	35.03	1,627	1,654
A2. Simple Cycle Power Block, Ph	-	-	-
A3. Combined Cycle Power Block, Ph 2	-	-	-
A. Total Power Block Cost (A1+A2+A3)	35.03	1,627	1,654
B. Special Siting Costs	-	-	-
C. Power Plant Switchyard	-	-	-
D. T&D Interconnection	-	-	-
E. Total Direct Cost (A+B+C+D)	35.03	1,627	1,654
F. Total Indirect Cost (E*0.196)	6.87	319	324
G. Land Cost	-	-	-
H. Total Capital Cost (E+F+G)	41.90	1,946	1,978

Operations & Maintenance:

	$ million/y	or $/kW-y$_{net}$
Fixed Cost	1.412	66.63
	$/h run	or $/MWh$_{net}$
Variable Cost	478	22.56
Staffing Requirements		11

Capacity and Heat Rate Data:

Load Point	# CTGs	Comp Inlet F/RH	Gross Load MW	Net Load MW	Net Plant Heat Rate Btu/kWh	Quick Load Pickup MW
Normal Top	1	86/70	21.53	21.18	10,994	-
Minimum	1	86/70	5.41	5.22	17,102	16.12

Flue Gas Emissions:

	Normal Top Load at 59 F/70 %RH lb/MBtu	Minimum Load at 59 F/70 %RH lb/MBtu
Nitrogen Oxides	0.16	0.16
Sulfur Oxides	0.41	0.41
Carbon Dioxide	160	160
Carbon Monoxide	0.07	0.75
Volatile Organic Compounds	0.003	0.060
Particulate Matter	0.10	0.27

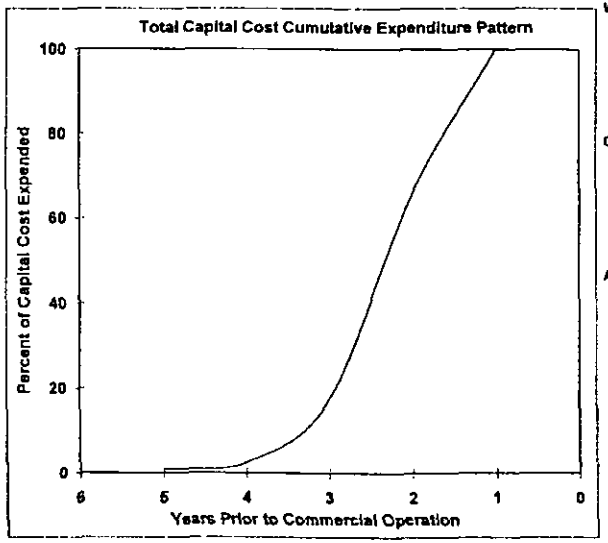

General Site/Technology Characteristics:

Fuel Delivery	Truck
Fuel Storage Onsite	30
Water Supply Source	Brackish Wells
CTG Inlet Air Cooling	No
Cycle Cooling	NA
Waste Water Disposal	Reinjection
Solid Waste Disposal	On-Island
Minimum Land Requirement	5.0 acres

Daily Resource Requirements at Normal Top Load:

Fuel	bpd	966
Service & Plant Water	mgd	0.101
Cooling Tower Makeup	mgd	NA
Supply Water Temperature	F	79

Waste Streams:

Solid Waste	tpd	0.016
Waste Water Discharge	mgd	0.067
Water Discharge Temperature	F	79
Thermal Discharge	MBtu/d	-

CTG/HRSG/STG Unit Startup Parameters:

Cold Start Heat Input Requirement	MBtu	33
Hot Start Heat Input Requirement	MBtu	33
Hot Hours	hours	0
No. of Flues		1

Availability:

CTG Maintenance Pattern	wk/y	1-1-3-1-1-4
CTG Maintenance Pattern	wk/y	NA
STG Maintenance Pattern	wk/y	NA
Immaturity Period	weeks	5
Immature Forced Outage Rate	percent	6
Minimum Weeks Between Maintenance	weeks	50
Maintenance Requirement	weeks	1
Mature Forced Outage Rate	percent	3
Equivalent Availability	percent	85

PROPRIETARY INFORMATION

COPYRIGHT: BLACK & VEATCH, 2005

CA-IR-197
DOCKET NO. 2006-0387
PAGE 23 OF 148

SetID	Date	HR1	HR2	HR3	HR4	HR5	HR6	HR7	HR8	HR9	HR10	HR11	HR12
2007-11LdRC	1/1/2007	122.8	115.6	107.1	103.4	101.1	105.9	110.1	118.5	135.9	156.8	170.5	170.4
2007-11LdRC	1/2/2007	99	93.6	89.8	90.3	93.8	108.1	124.1	137.6	150.1	159.5	162.6	163
2007-11LdRC	1/3/2007	98	94.3	91.6	90.7	93.1	104.4	122.8	137.3	149	158.5	162.7	162.3
2007-11LdRC	1/4/2007	101.6	94.8	91.4	91.9	95.3	106.5	125.4	138.8	152.2	165.2	167.9	167.4
2007-11LdRC	1/5/2007	101	95.4	92.7	92.3	94.8	106.2	126.9	140.7	153.5	164	165.3	165.2
2007-11LdRC	1/6/2007	122.8	115.6	107.1	103.4	101.1	105.9	110.1	118.5	135.9	156.8	170.5	170.4
2007-11LdRC	1/7/2007	104.9	97.8	94.3	93.6	97.5	102.3	110.4	123.6	142.5	160.1	168.6	166.3
2007-11LdRC	1/8/2007	98.2	93.7	91.6	92.3	95.6	105.7	126	141	154.8	167.9	169.3	167.4
2007-11LdRC	1/9/2007	99	93.6	89.8	90.3	93.8	108.1	124.1	137.6	150.1	159.5	162.6	163
2007-11LdRC	1/10/2007	98	94.3	91.6	90.7	93.1	104.4	122.8	137.3	149	158.5	162.7	162.3
2007-11LdRC	1/11/2007	101.6	94.8	91.4	91.9	95.3	106.5	125.4	138.8	152.2	165.2	167.9	167.4
2007-11LdRC	1/12/2007	101	95.4	92.7	92.3	94.8	106.2	126.9	140.7	153.5	164	165.3	165.2
2007-11LdRC	1/13/2007	102.8	96.2	92.3	91.2	94.1	100.2	108	125.5	143.5	154.5	157.7	156.5
2007-11LdRC	1/14/2007	103.4	97.4	95.6	94.6	96.7	100.6	105.2	116.4	136	149.3	156.9	157.4
2007-11LdRC	1/15/2007	96.4	92.1	90.4	89.5	93.6	98.2	125.6	139.8	152	161.5	162.9	161.4
2007-11LdRC	1/16/2007	97.5	92.8	90.4	90.4	94.1	104.7	125.6	137.8	150.1	158.9	162.5	162.4
2007-11LdRC	1/17/2007	94.8	90.4	88.5	88.6	92.1	103.1	123.5	135.8	144.6	155.9	158.1	157
2007-11LdRC	1/18/2007	96.4	91.8	89.3	90	93.1	106.4	128.8	142.1	153.6	163.3	164.1	162.9
2007-11LdRC	1/19/2007	100.1	95.4	93.9	94.8	98.7	110.7	131.6	147.6	156.1	168	169.6	168.3
2007-11LdRC	1/20/2007	105.5	100.2	99.4	98.2	101.6	108.1	115.4	130.5	151.7	163.7	164.1	164.6
2007-11LdRC	1/21/2007	107.4	101.2	99.3	98.8	99.9	105.2	115.9	129.7	147.3	160.1	165.2	164.9
2007-11LdRC	1/22/2007	109.8	105.1	100.2	100.5	103.7	113.1	127.5	148.1	163.6	176.6	179.4	176.9
2007-11LdRC	1/23/2007	106.2	101.7	98.8	98.5	101.7	112.6	136.4	151.7	163.3	173.1	173.7	171.9
2007-11LdRC	1/24/2007	100.4	94.6	92.2	92.1	96.7	108.6	131.3	145.7	156.9	169.8	170.7	170.9
2007-11LdRC	1/25/2007	99.4	96.8	94.2	93.2	97.5	109.2	133.4	147.7	159.5	170.3	169.6	170.8
2007-11LdRC	1/26/2007	101.2	97.2	94.6	93.2	97.8	107.7	126.5	144.9	161.1	172.6	176.6	174.4
2007-11LdRC	1/27/2007	100.4	93.6	90.9	90.4	93.6	98.3	107.6	121.6	139.5	151.4	153.1	153.1
2007-11LdRC	1/28/2007	97.7	92.7	90.5	89.8	91.9	97.7	106.3	118.4	137.1	149.4	154.5	155.7
2007-11LdRC	1/29/2007	100.5	93.7	92.4	92.8	96.2	106.9	130.3	142.7	157	169	173.4	172.8
2007-11LdRC	1/30/2007	101.7	96.7	93.4	93.1	95.9	109.4	131.4	142.5	157	170	175.2	171.9
2007-11LdRC	1/31/2007	100.1	94.8	92.6	91.4	95.3	105.3	129.7	141.6	155.7	167.6	172.8	172.7
2007-11LdRC	2/1/2007	102.4	96.7	94.3	93.5	97.7	108.8	131.1	144.8	158.8	166.2	168.3	162.7
2007-11LdRC	2/2/2007	103.4	97.5	93.5	93.1	95.5	105.7	128.6	141.8	155.3	168.2	171.4	171.7
2007-11LdRC	2/3/2007	101.9	96.7	93.9	92.8	94.8	100.7	110	124.5	141.5	155.6	158.9	159.3
2007-11LdRC	2/4/2007	100.5	95.3	92.5	91.4	92.9	98.8	135.2	154.3	162.1	169.7	156.4	159.5
2007-11LdRC	2/5/2007	100	95.3	92.3	93.8	96.7	107.1	130.1	143.3	156.2	166.5	170.1	171
2007-11LdRC	2/6/2007	102.5	97.7	94	93.5	96.7	104.8	127.4	142.7	154.7	161.5	163.3	161.8
2007-11LdRC	2/7/2007	96.3	93.3	91.1	90.5	94.5	104.2	127	141.6	152.5	160.7	162.8	161.2
2007-11LdRC	2/8/2007	96.2	92	89.8	90.2	93.9	104	125.5	139.7	150.2	158.5	160.9	158.5
2007-11LdRC	2/9/2007	95.7	92.8	91.2	90.9	93.8	103.5	126.5	142	153.7	163.3	165.1	163.8
2007-11LdRC	2/10/2007	99	95	92	92.1	94.5	99.7	110.4	125.9	146.3	159.3	161.2	161.5
2007-11LdRC	2/11/2007	101	95.8	93.4	92.4	92.8	98.5	105.4	118.2	138.1	150.7	159.4	163.4
2007-11LdRC	2/12/2007	100.8	96.4	94.2	93.3	96	106.3	128.2	143.4	159.3	171.5	175.6	177.6
2007-11LdRC	2/13/2007	102.6	98	96.2	94.9	97.5	106.9	127.1	144.8	160.2	168	171.5	172.1
2007-11LdRC	2/14/2007	100.9	97.7	95.4	94.4	96.7	106.4	129	145.4	154.8	164.5	167.2	171.1
2007-11LdRC	2/15/2007	98.3	96.7	95	94.7	97.5	106.4	127.4	143.7	157.4	169.1	171.8	168.8
2007-11LdRC	2/16/2007	100.5	96.5	93.8	92.9	94.7	104.5	125.5	140.3	154.5	163.7	164.6	167
2007-11LdRC	2/17/2007	99.8	95.2	92.1	91.2	92.8	98	107.4	121.8	135.3	153	155.1	153.2
2007-11LdRC	2/18/2007	99.5	94.2	91.6	90.3	92.3	96.5	104.6	118.5	135.3	145.9	148.5	146.9
2007-11LdRC	2/19/2007	95.2	92.3	90.3	90.7	92.9	101.6	122.4	128.3	149.7	158.5	160.3	158.1
2007-11LdRC	2/20/2007	95.9	92.3	90.1	89.7	92.9	102.7	122.7	139.5	153.2	162.8	161.6	158.6
2007-11LdRC	2/21/2007	99.7	93.5	91	90.7	93	102.1	123.7	138.6	149.8	159.5	161.2	161.8
2007-11LdRC	2/22/2007	97.9	94.5	92.4	90.6	93.4	102.9	127.2	139.1	152.6	160.7	164.7	164.7
2007-11LdRC	2/23/2007	98.2	95.2	93	92	95.2	103.5	125.4	140	152.9	161.8	164.3	163.8
2007-11LdRC	2/24/2007	100.9	96.4	93.8	92.3	93.6	98.2	108.4	124.1	142.3	153.4	155.2	152.5
2007-11LdRC	2/25/2007	97.4	93.5	91.6	90.7	92.5	96.9	104.3	117.1	134.1	144.8	147.6	146.4
2007-11LdRC	2/26/2007	97.7	93.1	91	90.1	92	98.8	110.1	122.5	140	154.1	157	154.2
2007-11LdRC	2/27/2007	97	92.8	91.2	90	93.4	102.1	121.9	135.2	149.2	160.2	162.5	161.5
2007-11LdRC	2/28/2007	99.7	94.9	92.4	91.7	94.7	104.1	124.9	139	153.5	164.9	168.3	166.1
2007-11LdRC	3/1/2007	101.1	96.8	94.4	94	96.8	107.8	131.2	142.2	158.8	165.4	171.1	170.3
2007-11LdRC	3/2/2007	102	97.3	94.4	93.9	96.3	107	129.1	142.4	159.2	169.2	171.2	170.5
2007-11LdRC	3/3/2007	101.8	97.6	94.3	92.7	94.8	99.7	112.1	125.1	145.2	157.9	163.4	158.8
2007-11LdRC	3/4/2007	101.8	97.4	94	93	95.4	100.1	108	122	139.7	150.7	156.5	157
2007-11LdRC	3/5/2007	97.9	96.1	94	93.4	95.4	104.8	130.1	141.7	160.5	162.9	165.8	165
2007-11LdRC	3/6/2007	97.8	93.5	90.9	90.5	91	104	131.1	143.7	152.1	162.7	162.5	164
2007-11LdRC	3/7/2007	98.7	92.6	89.7	90	93.5	104.4	128.4	140	153.3	163.8	163.2	162.4
2007-11LdRC	3/8/2007	99.2	92.9	91.8	90.4	93.1	106.7	127.2	142.6	155	161.8	165.2	166.3
2007-11LdRC	3/9/2007	102.8	95.4	90.9	90.6	92.5	105.3	128.5	142.1	154.1	163.8	165.1	166
2007-11LdRC	3/10/2007	102.7	96.5	93.4	92.2	94.7	102.7	114.2	130.5	150.3	161.9	163.7	162.6
2007-11LdRC	3/11/2007	104	98.2	94.6	92.2	93.5	99.7	107.9	121.6	142.3	153.8	155.8	155.7
2007-11LdRC	3/12/2007	100.4	95.4	92.3	90.2	95	107.3	131	146.3	160.9	170.6	171.9	172
2007-11LdRC	3/13/2007	106.3	100.1	96.6	95	98.6	110.6	135.2	152.6	168.4	177.7	181	180.7
2007-11LdRC	3/14/2007	112.4	106.7	101.6	100.1	102.3	114.2	140	155.7	167.3	173.2	173.8	173.5
2007-11LdRC	3/15/2007	101.6	95.6	92.1	91.3	95.4	107	131.4	147.4	156.9	164.4	162.4	160.5
2007-11LdRC	3/16/2007	96.1	90.6	88.2	87.6	91.4	103.5	128.5	142.7	153.7	159.2	161.1	160.6
2007-11LdRC	3/17/2007	99	93.5	92.2	89.8	92.5	98.7	109.3	126.4	144.8	157	159.3	159.6
2007-11LdRC	3/18/2007	94.7	90.4	85.7	85.7	88.5	94.7	102.7	125.5	138	146	146.5	146.1
2007-11LdRC	3/19/2007	94.2	87	86.2	85.4	89.3	102.1	125.7	138.2	149.6	153.9	159.6	152.3
2007-11LdRC	3/20/2007	92.9	88.4	86.2	86	90.4	103.2	127.1	141.1	151.2	157.5	158.2	155.4

SetID	Date	HR1	HR2	HR3	HR4	HR5	HR6	HR7	HR8	HR9	HR10	HR11	HR12
2007-11LdRC	3/21/2007	90.2	87	84.3	83.8	88.5	100.2	122.5	137.2	144.9	152.7	151.5	149.8
2007-11LdRC	3/22/2007	93.3	90	86.2	86.6	90	103.2	125	138.8	148	156.6	159	159
2007-11LdRC	3/23/2007	95.7	91.2	88	86.9	91.2	102.1	124.5	137.6	151	160.5	161.4	159.9
2007-11LdRC	3/24/2007	99.5	94.6	90.9	90.2	91.6	98.5	109.3	126.7	145.5	156.7	155.9	155.4
2007-11LdRC	3/25/2007	100	93.4	90.4	90.1	92.9	98.3	109	124.7	142.6	152.4	154.3	152.9
2007-11LdRC	3/26/2007	98.3	94.4	88.8	90.2	93.5	104.5	122.4	139.3	158.1	166.9	168.9	167.9
2007-11LdRC	3/27/2007	102.8	96.9	93.1	91.6	94.6	106.4	123.4	140.7	159.8	170.4	173	171.5
2007-11LdRC	3/28/2007	105.5	99.9	95.7	94.8	98.7	107.8	124.3	141.2	161.1	171.4	174.8	175.9
2007-11LdRC	3/29/2007	111	105	101.3	99.1	101	110.7	126.3	143.5	163.3	177.7	181.6	180.9
2007-11LdRC	3/30/2007	110	102.1	99.2	97.3	94.8	108.5	123.9	140.9	161.4	173.9	178.6	178.1
2007-11LdRC	3/31/2007	107.8	101.9	98.7	97.6	99.6	104.2	110.5	129.2	146.5	159.9	160.5	159.4
2007-11LdRC	4/1/2007	99.1	93.8	91.7	90.4	92.2	98.2	105.8	121.3	139.6	148.5	150.4	148.4
2007-11LdRC	4/2/2007	98.9	93.1	89	90.2	94.6	104.2	123.3	139.5	154.9	163.5	165.4	166.2
2007-11LdRC	4/3/2007	102	95.9	91.9	93.9	97.3	107.4	130	144.6	159.7	169.8	170.9	168.9
2007-11LdRC	4/4/2007	103.3	97.3	94.4	92.9	97.7	107.5	128	146	161.3	168.9	169.7	172.7
2007-11LdRC	4/5/2007	101	97.2	94.2	92.7	97.5	107.7	132.8	143.6	159.7	166.7	170.4	168.4
2007-11LdRC	4/6/2007	101.6	98	95.1	94.6	97.1	107.4	123.7	137.8	159.1	165.4	166.7	165.4
2007-11LdRC	4/7/2007	99.1	96.6	95.1	94.1	98.2	104.8	107.9	131.8	147.4	158.4	157.3	156
2007-11LdRC	4/8/2007	99.8	96.6	94.5	93.6	96.2	100.7	107.4	126.2	142.9	150	150.8	150.8
2007-11LdRC	4/9/2007	98.7	94.1	94	93.4	98.2	113.2	124	143.1	153.2	162.1	162.8	162.2
2007-11LdRC	4/10/2007	99.4	96.2	94.5	94.1	96.8	111.4	119.7	139.7	149.2	159.5	164.1	164.8
2007-11LdRC	4/11/2007	98.1	96	94.2	94.6	99.4	112.9	128.7	145.2	160.9	165.4	164.4	163.9
2007-11LdRC	4/12/2007	100.6	99.1	96.4	95.7	100.3	114.5	122.7	139.8	153.9	158.9	163.9	164.8
2007-11LdRC	4/13/2007	100.9	99.3	96.2	96.2	100.9	112	128.4	150	165.5	169.7	172.9	171.3
2007-11LdRC	4/14/2007	106.2	102.4	99.5	98.5	98.6	104	120.4	135.8	150.4	158.5	158.3	158.9
2007-11LdRC	4/15/2007	104.3	98.7	96.8	96	97.8	100.6	109.5	130.5	144.2	149	153.9	154.1
2007-11LdRC	4/16/2007	102.1	98.2	98.1	96.2	99.8	109.8	133.1	146.9	164.4	171.2	173.2	174
2007-11LdRC	4/17/2007	104	100.3	97.1	97.4	99.9	111.7	124.9	152.1	165.1	172.2	171.3	171.8
2007-11LdRC	4/18/2007	103.6	99.8	97.7	97.1	99.5	109.5	127.7	144.4	157.4	166.8	170.4	172
2007-11LdRC	4/19/2007	103.2	99.8	97.3	95.7	98	107.7	127.2	141.2	157.4	168.9	173.5	173.7
2007-11LdRC	4/20/2007	105.6	101.8	98.8	97.7	99.8	108.3	126.5	145.3	158.5	168.2	171.2	171.2
2007-11LdRC	4/21/2007	107.7	102	98.5	96.9	98	102.4	112.9	130.5	147.1	159	163.9	163.6
2007-11LdRC	4/22/2007	106.8	101.4	98.6	97.1	98.1	103	110.1	124.9	141.7	152.1	156	157.4
2007-11LdRC	4/23/2007	103.2	100.9	97.7	97.3	101.2	117.4	126.1	144.1	157.1	166.2	170.4	172.1
2007-11LdRC	4/24/2007	99.2	98.5	96.6	95.5	101.8	114.8	123.3	138.6	150.3	163.2	168.5	169.4
2007-11LdRC	4/25/2007	100.3	98	96.2	95.7	100	106.5	124.9	140.5	154.9	162	166.4	167.9
2007-11LdRC	4/26/2007	102.1	98.1	96.7	95.4	97.5	106.2	124.9	138.8	152.8	161.7	165.6	167.1
2007-11LdRC	4/27/2007	103.6	99.8	97.7	95.7	98.1	105.9	124	139.5	153.7	166.2	164.7	165.8
2007-11LdRC	4/28/2007	104.4	98.5	96.2	95.5	96.8	101.3	110.1	130.4	140.1	151.1	154.9	154.8
2007-11LdRC	4/29/2007	102.9	98.5	95.7	94.6	95.9	100.2	107.3	118	131.8	142.3	148.4	149.7
2007-11LdRC	4/30/2007	101.5	97.4	95.2	95.5	98.6	107	118.6	138.7	151.7	161.5	164.5	166.2
2007-11LdRC	5/1/2007	98.3	93.9	92.2	92.4	95.2	104	119.6	134.6	147.7	158.1	161.9	161
2007-11LdRC	5/2/2007	97.7	94.8	93.6	93.8	95.6	104.1	120.3	135.7	147.5	158.1	162.5	165.2
2007-11LdRC	5/3/2007	102.6	97.6	95.4	93.6	96.3	104.2	127.7	137	151.1	158.1	157.9	156.8
2007-11LdRC	5/4/2007	100.4	96	94.1	93	95.7	104	121.9	137.1	152.7	160.4	161	163.9
2007-11LdRC	5/5/2007	102.4	97.7	94.3	93.7	95.4	100	107.7	122.7	139.2	150.3	152.3	152.6
2007-11LdRC	5/6/2007	103.8	99.4	97	95.8	96.3	100.3	106.3	119.3	134.6	144.4	148.2	149.2
2007-11LdRC	5/7/2007	102.4	98.3	96.1	95.5	97.3	105.9	122.3	138.6	153.5	164.8	169	169.7
2007-11LdRC	5/8/2007	104.6	99.9	97.4	97.1	99.4	108.4	125.2	139.4	154.4	164.1	170	172.8
2007-11LdRC	5/9/2007	105.8	101.5	99	98.7	101.4	110.3	126.2	140.4	157.1	168	172.8	175.8
2007-11LdRC	5/10/2007	106.3	102.2	100.1	99.7	101.9	110.5	126.2	141.4	158.3	169.5	172.7	173.9
2007-11LdRC	5/11/2007	108.5	103.3	100.9	100.4	102.3	111.2	126.5	144	160.2	168.7	174.5	176.7
2007-11LdRC	5/12/2007	109	104.2	101.2	100.6	101.5	106.3	114.4	130.4	147.6	157.7	162	160.9
2007-11LdRC	5/13/2007	107.3	101.8	99.2	98.1	100.6	104	109.4	123.4	138.5	148.6	152.4	153
2007-11LdRC	5/14/2007	106.1	102.8	100	99.9	101.2	110.6	126.5	142.3	158	169.7	175.9	177.6
2007-11LdRC	5/15/2007	104.7	100.2	97.2	97.7	100.4	109.8	127.1	141.4	157.9	167	170.2	172.7
2007-11LdRC	5/16/2007	103.8	100.3	98.2	97.3	98.9	108.2	116.3	140.8	156	165.4	170.7	175.2
2007-11LdRC	5/17/2007	106.9	102.7	99.7	99.2	100.7	109.7	126.8	144.2	160.1	167.2	170.2	173.4
2007-11LdRC	5/18/2007	106.1	103.1	100.7	100.6	103.1	111.5	127.5	141.4	156.7	166.8	170.2	173.1
2007-11LdRC	5/19/2007	111.9	102.8	95.6	100.1	103.7	109.1	114.9	129.3	144.2	154.5	159	159.8
2007-11LdRC	5/20/2007	104.7	103.1	100.4	99.9	101.6	107.2	111.1	123.9	137.1	147.1	153.1	155.9
2007-11LdRC	5/21/2007	105	102.8	100.1	100.2	105.9	116.5	128.5	143.1	158.3	169.3	174.9	176.8
2007-11LdRC	5/22/2007	106.6	102	100.2	99.7	102.3	110.8	127.7	143.2	159	168.4	172	175.4
2007-11LdRC	5/23/2007	108.1	103.2	101.2	100.4	102.8	111.7	129.8	144.7	157.9	168.7	174.7	176.7
2007-11LdRC	5/24/2007	108.8	105.2	102.5	102.1	103.6	111.5	129	145.3	159.7	166.6	170.1	170
2007-11LdRC	5/25/2007	104.4	101.2	99.3	97.8	100.1	110	128.7	144.3	158.2	166.6	172	170.1
2007-11LdRC	5/26/2007	107.7	103.6	101.2	100.1	100.7	106.5	113.3	132	143.4	150.9	158.3	162.5
2007-11LdRC	5/27/2007	108.7	103.9	100.8	99.3	100.9	104.4	111.2	123.4	135.1	146	152.4	157.2
2007-11LdRC	5/28/2007	107.6	102.7	100.2	99.2	100.6	104	111.9	123.9	136.8	147.6	154.4	158.2
2007-11LdRC	5/29/2007	108.2	103.9	101.7	102.3	102.9	112.7	129.3	148.2	164.9	174.4	178	178.7
2007-11LdRC	5/30/2007	108.1	103.2	101.2	100.4	102.8	111.7	129.8	144.7	157.9	168.7	174.7	176.7
2007-11LdRC	5/31/2007	106.9	102.4	100.8	99.9	101.6	110.8	128.5	146.5	162.9	172.9	177.4	177.8
2007-11LdRC	6/1/2007	109.7	104	101.4	101.3	101.3	111.9	131.8	148.3	165.7	172.4	178.7	179.5
2007-11LdRC	6/2/2007	112.9	104.3	100.9	98.7	100.2	108	118.2	133.9	148.3	157.1	163.8	167.7
2007-11LdRC	6/3/2007	111.5	106	101.6	98.7	99.9	103	111.1	124.6	139.4	150.8	158.5	161.3
2007-11LdRC	6/4/2007	108.5	102.4	99.1	97.9	99.7	104	113.8	128.1	142.4	153.6	160.3	164
2007-11LdRC	6/5/2007	108.9	105.5	101.6	99	101.8	111.5	132.8	147.2	169.1	179.1	183.1	185.6
2007-11LdRC	6/6/2007	113.5	107.8	104.8	103.9	105.1	114.9	132.8	151.9	167	177.2	179.6	182
2007-11LdRC	6/7/2007	112.9	107.6	104.5	102.8	105.1	114.6	131.5	150.5	166.6	176.2	178.9	182.7

SetID	Date	HR1	HR2	HR3	HR4	HR5	HR6	HR7	HR8	HR9	HR10	HR11	HR12
2007-11LdRC	6/8/2007	112.9	107.3	104.8	103.9	106.2	117	134.5	153	170.9	177.9	181.9	183.3
2007-11LdRC	6/9/2007	117.6	110.1	106	104.8	105.3	109.3	118.3	137	157.4	168.2	173.7	173.3
2007-11LdRC	6/10/2007	114.1	108.8	104.7	103	103.5	108.5	115.7	130.7	146.8	159.2	164.1	166
2007-11LdRC	6/11/2007	111.7	106.2	103.9	102.2	104.5	114.2	131.1	150.2	165.8	177.8	179.8	180.5
2007-11LdRC	6/12/2007	111.9	105.9	102.8	102.9	105.2	113.8	130.2	152	168.4	177.6	178.9	179.9
2007-11LdRC	6/13/2007	111.2	105.3	103.6	101.4	103.6	110.6	125.6	146.5	163.1	176	179.6	181.1
2007-11LdRC	6/14/2007	112.1	107.3	103.5	102.5	101.8	111.5	127.7	148	165.2	177.1	179.8	181
2007-11LdRC	6/15/2007	112.8	107	103.5	102.8	104	111.4	122.4	142.4	159.3	169.8	173.4	176.5
2007-11LdRC	6/16/2007	114.2	107.3	104.1	102.6	103.6	109.4	116.2	132.9	151	164.5	167.4	167.5
2007-11LdRC	6/17/2007	111	105.3	102	101.2	102.4	107.3	114.2	130.6	144.9	154.5	160.2	161.6
2007-11LdRC	6/18/2007	111.1	106.2	102.8	100.5	102.9	112.1	126.7	147.8	166	178.3	182.4	185.2
2007-11LdRC	6/19/2007	114.2	108.1	104.4	102.9	105.3	116.1	127.8	149.1	165.3	175.5	178	182.4
2007-11LdRC	6/20/2007	113.2	107.6	105.1	103.9	105.9	114.2	128.8	148.1	164.4	175.4	178.7	180.2
2007-11LdRC	6/21/2007	114.6	108.4	104.1	102.5	104.4	113.2	126.5	146.1	161.9	174.5	179.1	181
2007-11LdRC	6/22/2007	114.9	108.9	105.7	104.4	106	115.5	130	150	167.6	177.2	179.6	182.3
2007-11LdRC	6/23/2007	114.7	108.4	105.2	103.5	104.4	111.5	117.7	134.7	152.2	163.1	168.2	170
2007-11LdRC	6/24/2007	114.2	108	104	102.9	102.9	108.8	118.3	132.6	150	158.5	164.6	166.8
2007-11LdRC	6/25/2007	112.1	105.3	103.6	102	105.7	114.6	123.2	137.5	163.6	178	182.5	183.5
2007-11LdRC	6/26/2007	111.7	106.1	103.2	101.8	103.5	112.3	134.3	157.1	167.5	174.5	177.4	177.7
2007-11LdRC	6/27/2007	110.1	105.3	102.5	100.5	103.6	111.9	127.1	149.5	167.2	176.5	180.5	180.3
2007-11LdRC	6/28/2007	112.1	106.6	103.5	102.1	104.7	114.1	130	148.5	164.2	177.1	180.6	181.2
2007-11LdRC	6/29/2007	111.7	107.4	103.2	102.8	104.8	113.5	128.2	148.2	161.7	176	179.1	180.6
2007-11LdRC	6/30/2007	114.9	108.9	104.7	103	103.6	109.4	119.1	136.5	154.2	165.5	170.1	170.8
2007-11LdRC	7/1/2007	113.5	108.4	105.2	104.1	104.9	108.8	115.3	126.5	141.9	153.8	159	159.7
2007-11LdRC	7/2/2007	111.2	107.8	105.2	104.5	106.7	112.2	126.5	143.2	162	173.8	179.4	182.8
2007-11LdRC	7/3/2007	111.8	107.4	104.8	103.5	105.6	112.5	125	144.1	163.4	174.9	179	180.6
2007-11LdRC	7/4/2007	113.5	108.6	106.1	104.8	105.3	107.9	112.2	126.5	148.2	160	168.6	166.7
2007-11LdRC	7/5/2007	114	108.7	106.8	105.4	107	114.5	128.8	146.3	167.1	181.4	183.9	185.8
2007-11LdRC	7/6/2007	113.1	109.1	106.7	106.1	107.7	111.9	125.6	142.8	162.1	175.1	180.2	182.1
2007-11LdRC	7/7/2007	114.8	109.7	107.4	105.9	106.1	110.4	115.8	128.4	146.5	157.5	161.8	164
2007-11LdRC	7/8/2007	113.3	109.7	106.9	104.8	105.7	108.7	114.1	125.2	141.3	153.1	158.7	159.2
2007-11LdRC	7/9/2007	113.5	108.6	106.1	104.8	105.3	107.9	112.2	126.5	148.2	160	168.6	166.7
2007-11LdRC	7/10/2007	113.8	109.9	108.8	107.7	108.3	113.9	124.8	145.1	164.6	181.4	185.6	188.5
2007-11LdRC	7/11/2007	115.5	110.8	108.3	107	108.2	114.9	127.1	145.7	166.3	180.9	182.8	186
2007-11LdRC	7/12/2007	115.7	110.7	108.5	107.8	109.8	116	126.5	145.4	163.4	176.7	182.7	184.7
2007-11LdRC	7/13/2007	114.7	110.5	108.6	107.4	109	114.4	125.3	141.9	161.3	176.2	182.5	182.7
2007-11LdRC	7/14/2007	116.6	111.7	109	108.5	109.1	112.3	116.8	133	151.6	165.3	171.6	172.8
2007-11LdRC	7/15/2007	114.8	110.3	107.7	106.6	107	109.5	113.7	127.2	143.7	155.4	162.4	164.5
2007-11LdRC	7/16/2007	113.3	108.7	106.7	106.1	107.6	113.6	124.4	143.4	162	175.9	182.9	185.8
2007-11LdRC	7/17/2007	114.6	110.4	107.9	107.7	108.7	114.7	124.9	144	163.1	177.2	184.6	185.2
2007-11LdRC	7/18/2007	114.8	110.7	108.7	107.8	108.7	114.8	125	142.8	162	175.9	181.7	184
2007-11LdRC	7/19/2007	114.2	110.4	107.8	107.2	108.8	114.8	117.8	142.9	162.3	176.2	182.5	186.1
2007-11LdRC	7/20/2007	115.7	111.4	109	108.3	109.7	116.5	125.9	142.9	160.6	173.8	179.7	182.7
2007-11LdRC	7/21/2007	115.1	110.9	108.3	106.9	107.9	111.2	116.6	132.1	152.2	165.9	172.8	174.2
2007-11LdRC	7/22/2007	114.9	110.2	108.1	106.9	107.6	110.6	114.1	126.9	145.2	158.9	163.8	165.1
2007-11LdRC	7/23/2007	114.3	109.4	108	107.1	108.7	109.3	125.1	143.7	165.1	181	185.6	187.4
2007-11LdRC	7/24/2007	116.5	111.4	108.7	107.8	109.5	115.6	125.4	143.6	163.8	179.8	186.9	188.5
2007-11LdRC	7/25/2007	114.9	110.4	107.8	107.1	109	115.1	125	142.3	160.6	172.1	176	181.3
2007-11LdRC	7/26/2007	113.9	109.6	107.5	106.3	108.1	114.1	125.1	140.8	158.1	171.6	175.9	177.1
2007-11LdRC	7/27/2007	113.7	109	107	105.5	107.9	113.3	125.7	142.5	160.4	176.6	182.9	186.1
2007-11LdRC	7/28/2007	115.7	110.3	107.9	106.1	107.3	110.3	117.8	130.6	150.2	164.2	171.1	171.4
2007-11LdRC	7/29/2007	116.8	111.5	108.6	106.8	107.3	110.8	115.7	128.2	145.4	158.2	165.1	166.3
2007-11LdRC	7/30/2007	117.7	111.2	109	107.8	109.3	115.1	127.5	148.3	168.7	183.3	193.2	196.1
2007-11LdRC	7/31/2007	118.6	113.4	110.6	110.1	111.4	118.6	130.9	147.8	168.7	183.8	189.2	190.9
2007-11LdRC	8/1/2007	116.8	111.3	109	107.4	109.2	115.3	128.6	148.1	167.6	181.2	187	189.2
2007-11LdRC	8/2/2007	116.6	111.3	108.8	107.2	109.2	116.3	128.7	144.5	167.2	182.4	187.6	188.9
2007-11LdRC	8/3/2007	116.9	112.7	110	108.8	110.9	118.1	130.3	150.3	167.3	182.1	185.9	187.3
2007-11LdRC	8/4/2007	116.9	111.3	108.1	106.5	107.2	111.9	117.8	135.1	152.8	168	174.7	176.4
2007-11LdRC	8/5/2007	115.5	111.5	107.9	106.8	107.1	110.6	114.7	129.3	148.2	161	168.5	169.3
2007-11LdRC	8/6/2007	114.7	110	108.3	106.7	109.1	114.9	126.8	146	167.4	182.5	187.2	186.9
2007-11LdRC	8/7/2007	115.5	111.3	108.6	108.3	109.6	115.5	127.6	146.9	168.9	182.6	187.7	190
2007-11LdRC	8/8/2007	115.7	111	108.1	107.6	109.5	116.8	129.2	146.2	164.7	179.4	186.1	188.7
2007-11LdRC	8/9/2007	114	109.5	107.3	106.7	107.7	115.1	126.6	143.9	163.7	177.4	184	184.6
2007-11LdRC	8/10/2007	113.1	108.8	106.5	105.6	107.3	114.6	125.7	144.9	163.6	177.3	181.2	182.1
2007-11LdRC	8/11/2007	116.9	111.2	108.5	106.5	107.3	111.3	116.8	130.8	150.3	166	171.9	174.5
2007-11LdRC	8/12/2007	116.3	111.6	108.7	107.7	108.3	111.6	116	129.3	148.3	161.7	168.2	171.8
2007-11LdRC	8/13/2007	117	111.7	109.2	108.1	109.6	116.8	129.8	152.4	172.1	187.5	193.5	197.4
2007-11LdRC	8/14/2007	116.8	111.6	109	108.6	110.3	117.3	130.7	151.7	173.6	188.8	195.9	197.9
2007-11LdRC	8/15/2007	117.5	112.1	108.6	107.8	109.1	115.7	127.8	147.7	168.5	183.9	190.5	194.6
2007-11LdRC	8/16/2007	118.7	113.7	110.9	109.5	110.5	118.4	130.5	151.7	172.8	186.2	190	188.7
2007-11LdRC	8/17/2007	116.1	110.9	108.3	107.2	107.6	112.5	123.1	146.9	164.7	179	186.3	189.6
2007-11LdRC	8/18/2007	116.6	110.9	108.1	106.3	106.5	111.3	115.8	129.2	150	166.7	172	173.1
2007-11LdRC	8/19/2007	115	109.8	107.8	105.7	106.3	109.1	113.4	135.4	144.2	158.3	162.4	160.3
2007-11LdRC	8/20/2007	113.9	109.4	106.4	106.7	109.3	114.7	128.1	147.2	166	184.5	190	192.9
2007-11LdRC	8/21/2007	117	110.8	110.1	107.7	109.9	116.2	127	147.3	167.6	183.6	189.4	191.8
2007-11LdRC	8/22/2007	114.2	109	107.3	105.3	107.6	114	126.3	144.6	163.6	178.9	184.9	188.1
2007-11LdRC	8/23/2007	115.1	110.8	107.6	106.7	108.6	109	127.5	145.8	168.6	182.8	188.4	191.5
2007-11LdRC	8/24/2007	115.8	110.2	107.6	106.6	108.7	114.4	125.1	141.1	160.5	172.1	180.4	183
2007-11LdRC	8/25/2007	119.8	113.2	110	108.1	108.5	112.7	117.9	133.5	155	170.2	174.9	174.7

SetID	Date	HR1	HR2	HR3	HR4	HR5	HR6	HR7	HR8	HR9	HR10	HR11	HR12
2007-11LdRC	8/26/2007	114.3	109.1	106	104.5	104.7	107.4	111.3	122.2	141.5	154.3	159.9	161
2007-11LdRC	8/27/2007	112.3	107.6	105.1	104.1	105.8	111.5	122.6	141.3	162.3	178.8	186.6	188.3
2007-11LdRC	8/28/2007	113.4	108.7	106.4	105.8	107.4	113.9	125.4	144.4	161.3	175.1	181	182.6
2007-11LdRC	8/29/2007	111.7	108.3	106.3	105.3	107.4	114.9	124.7	144.8	164.4	175.9	181	182.5
2007-11LdRC	8/30/2007	113.7	109.8	107.7	106.7	108.8	116.7	131.9	146.9	163.8	177.7	184.2	188.7
2007-11LdRC	8/31/2007	114.3	110	108.1	106.6	108.1	116.6	133.5	149.3	168.5	182.4	185.7	187.2
2007-11LdRC	9/1/2007	115.4	110.8	108	106.8	107.2	109.7	115.5	129.3	149.8	163.9	171	172.8
2007-11LdRC	9/2/2007	112.8	108.7	105.8	104.2	104.9	107.9	111.7	122.4	140	151.3	159.7	161
2007-11LdRC	9/3/2007	116.3	111.1	108.3	107.2	108	112.5	118.5	131.9	150.7	165.8	172.2	174.5
2007-11LdRC	9/4/2007	114.5	109.2	106.7	106.1	107.9	113.5	129.5	145.3	165	176.4	184.4	188.9
2007-11LdRC	9/5/2007	110.6	107.5	105.7	104.9	106.7	113.4	122.3	141.1	160.3	172.1	177.3	178.9
2007-11LdRC	9/6/2007	114.9	110.6	107.7	107.1	107.8	117	133.7	148.5	165.5	177.9	184.1	186.5
2007-11LdRC	9/7/2007	114.1	108.1	106.4	105.2	105.9	114.8	131.7	146.6	164.8	175.9	181.1	184.8
2007-11LdRC	9/8/2007	116.5	110.3	107.7	106.7	107.5	112.8	118.5	132.9	150.1	164	172.6	175.8
2007-11LdRC	9/9/2007	115.5	111.1	107.5	106.1	107.5	110.5	115	128.6	145.5	157.4	160.7	164.2
2007-11LdRC	9/10/2007	116.3	111.1	108.3	107.2	108	112.5	118.5	131.9	150.7	165.8	172.2	174.5
2007-11LdRC	9/11/2007	114.5	110.3	108.4	107.1	109	117	131.9	148.5	166.4	178.4	183.4	183.7
2007-11LdRC	9/12/2007	112.1	108	106	105.5	106.7	115.1	130.3	146.6	162.4	174.4	179.3	181.7
2007-11LdRC	9/13/2007	112.5	108.6	106.1	105.1	107.5	115.5	131.5	145.5	162.7	174.5	178	183.4
2007-11LdRC	9/14/2007	112.8	109.3	106.5	105.6	107.5	116.8	132	147.1	160.9	173.9	179	182.2
2007-11LdRC	9/15/2007	116.8	111.2	108.6	107.6	108.8	113.1	118.7	134.4	152.5	166	176.3	176.7
2007-11LdRC	9/16/2007	115.8	110.8	107.5	105.8	109.7	110.7	115.2	127.1	144.4	156.9	162.2	164.8
2007-11LdRC	9/17/2007	112.7	108.4	106.6	106.2	108.4	115.9	132	149.1	166.5	177.6	182.2	187.8
2007-11LdRC	9/18/2007	112.8	108.2	105.9	105.1	107.7	116.1	133.5	147.3	163.5	175.7	181.7	185.2
2007-11LdRC	9/19/2007	116.8	109.3	107.5	106.7	109.2	117.2	136.5	147.6	164.1	173.3	180.6	183
2007-11LdRC	9/20/2007	113.6	108.2	107.3	105.6	109.4	116.3	132.8	148.1	165.9	177	180.7	181.3
2007-11LdRC	9/21/2007	112.8	108.6	107.1	106.2	107.4	116.8	133.1	149.7	167.5	178.3	182.5	181.7
2007-11LdRC	9/22/2007	114.1	109.2	107	105	106.4	111.1	118.7	132.6	149.5	161	163.4	165.8
2007-11LdRC	9/23/2007	110.7	106.3	104.3	103.1	104.3	108	112.8	124.2	139.2	150.2	157.4	159.6
2007-11LdRC	9/24/2007	106.7	103.8	102.6	101.5	101.7	110.3	125.6	140.1	157.5	170.2	174.5	176.2
2007-11LdRC	9/25/2007	109.9	105.9	104	103.1	105.2	112.8	128	141.9	158.7	170.6	177.6	179
2007-11LdRC	9/26/2007	110.2	105.8	104.3	103.4	105.8	114	120.7	143.8	160	173.1	175.5	177.5
2007-11LdRC	9/27/2007	111.3	107.7	105.2	103.5	105.4	114.6	131.8	143.1	160.1	170.7	176.6	178.9
2007-11LdRC	9/28/2007	113.6	108.9	107.1	106.3	108.3	117.5	132.8	148.6	165.3	180.5	184.6	185.6
2007-11LdRC	9/29/2007	114.2	108.4	106.7	105.4	106.3	110.9	117.1	133.1	153.9	166.4	171.8	172.6
2007-11LdRC	9/30/2007	115.8	110.6	107.9	105.6	105.7	110.7	115.6	129.9	146.5	161	167.4	171.1
2007-11LdRC	10/1/2007	116.4	112.4	109.1	107.8	110	117.6	135.1	153.4	168.2	176.9	185.3	183
2007-11LdRC	10/2/2007	112.6	107.8	106.3	105.2	108.1	115.9	130.3	144.3	162.2	172.7	177.8	178.3
2007-11LdRC	10/3/2007	111.5	107.2	105.2	104.8	107.5	115.3	130.9	145	157	166.9	173.2	179.4
2007-11LdRC	10/4/2007	110.7	107.7	105.2	107.6	106.2	115.6	130.6	145.6	161.8	173.1	176.9	179.7
2007-11LdRC	10/5/2007	112.1	108.6	105.9	105.6	106	115.1	129.3	146.5	162.9	173.6	177.3	176.4
2007-11LdRC	10/6/2007	111.5	107.6	105.8	104.7	106	110.1	115.2	130.8	152	168.5	173.9	175
2007-11LdRC	10/7/2007	112.4	108	105.2	104	104.4	109.3	113.2	125.4	143.4	155.8	165.6	165.6
2007-11LdRC	10/8/2007	111	107.4	105.8	104.9	106.5	113.2	128.4	143.5	160.7	174.9	180.4	184.2
2007-11LdRC	10/9/2007	109.4	106.3	104.6	104.6	106.5	112.9	124.4	140.9	160.3	169.3	174.5	176.7
2007-11LdRC	10/10/2007	110	105.9	104.4	104	106.3	113.2	127.7	143.4	160.2	171.3	174.2	179.1
2007-11LdRC	10/11/2007	110.5	106.5	104.9	104.5	106.6	112.8	129.1	144	163.2	173.7	178.2	181.1
2007-11LdRC	10/12/2007	115.4	110.5	106.9	105.4	107.5	113.1	129.8	153.1	170.2	180.2	184.1	180.2
2007-11LdRC	10/13/2007	110.5	107.1	104.7	104	104.7	109.3	113.9	138.2	150.9	163.2	164.8	165.3
2007-11LdRC	10/14/2007	109.6	106.2	103.7	102.8	104.7	106.6	111.6	132	143.5	161.3	158.6	159.4
2007-11LdRC	10/15/2007	109	106.2	104.8	103.8	105.9	110.8	129.8	150.8	164.9	174.8	178.9	183
2007-11LdRC	10/16/2007	111	106	104.7	105.6	106.4	111.3	132.6	156.8	169.8	178.3	179.4	179.9
2007-11LdRC	10/17/2007	109.4	106.2	105.6	103.9	105.2	113.1	130.6	145	160.4	171.4	177.6	180.2
2007-11LdRC	10/18/2007	107.4	105.8	103.9	103.6	105.7	111.2	120.8	142.1	159.7	171.9	177.9	179.8
2007-11LdRC	10/19/2007	109.4	105.8	104	103.9	104.8	111.9	127.7	142.2	158.8	173.5	177.6	177.7
2007-11LdRC	10/20/2007	109.7	105.4	102.9	102	102.8	105.8	111.2	124.3	141.3	155.1	158.8	161.2
2007-11LdRC	10/21/2007	109.4	105.8	103.7	102.9	104	106.9	112.2	124.4	141.3	150	159.5	165.6
2007-11LdRC	10/22/2007	111.3	107.3	105.4	104.5	106.9	115.2	133.3	150.1	168.6	182.3	185.4	189.4
2007-11LdRC	10/23/2007	109.9	106	104.2	103.8	105.2	113.1	128.5	143.9	161.7	174.3	179.9	180.8
2007-11LdRC	10/24/2007	109.4	106.1	104.6	104.4	106.6	115.1	132.3	147.3	165.7	175.9	182.7	187.4
2007-11LdRC	10/25/2007	109.8	106.8	104.8	104	105.1	112.8	130.7	145.2	165.8	179.9	184.5	188.8
2007-11LdRC	10/26/2007	113.1	108.9	105.2	104.4	106.5	114.6	132.1	147	164.9	178.5	180.7	184.8
2007-11LdRC	10/27/2007	112.6	107.8	106	104.9	106	110.5	118.5	132.7	149.4	162.7	167.5	170.2
2007-11LdRC	10/28/2007	109.5	106.3	104.2	103.3	104	107.6	114.7	125.9	140.2	151.1	155.2	155.6
2007-11LdRC	10/29/2007	106.2	102.5	101.5	101.4	103.5	110.9	129.4	145.1	160.9	172	175.6	178.6
2007-11LdRC	10/30/2007	107.6	104.8	103.2	103	104.8	112.1	129.4	143.7	161.6	171.3	175.6	174.6
2007-11LdRC	10/31/2007	107.5	104.9	103.5	102.4	104.6	112.7	129.6	144.6	160	172.3	178	178.6
2007-11LdRC	11/1/2007	106.1	102.8	100.9	100.5	102.4	110.1	124.6	140.5	157.8	168.3	170.8	173.5
2007-11LdRC	11/2/2007	107.8	104	102.4	102.1	103.9	110.9	128.9	145.1	160.1	170.1	173.1	174.8
2007-11LdRC	11/3/2007	113.9	108.2	104.9	103.1	103.6	106.2	112.9	128	143.6	156.3	159.5	158
2007-11LdRC	11/4/2007	110.7	106	102.2	101.1	100.9	104	107.7	122	134.2	145.9	154.9	156.6
2007-11LdRC	11/5/2007	111.8	105.4	103.6	102.2	104.1	110.6	123.4	145.1	156.1	173.3	179.3	181.9
2007-11LdRC	11/6/2007	117.1	111.3	107	105.5	108.1	115.3	132.1	148.6	163.5	173.3	178.1	180.5
2007-11LdRC	11/7/2007	113.8	107.4	103.5	102.2	104.8	114.5	132.1	144.7	160.1	169.8	174.9	177
2007-11LdRC	11/8/2007	107.7	102	99.9	99.3	102.2	111.4	130.5	143.7	158.8	168.9	172.6	173.7
2007-11LdRC	11/9/2007	107.4	102.1	98.9	98.9	101.5	112	132.1	144.4	160.6	171	173.2	173.3
2007-11LdRC	11/10/2007	110.4	104.1	100.6	98.7	100.8	107.1	115.5	128.9	147.6	159.9	163.4	163.7
2007-11LdRC	11/11/2007	109	102.5	99	97.7	98.9	104.1	111.2	126.4	143.2	153.3	157.4	160.6
2007-11LdRC	11/12/2007	104.5	100.5	97.7	96.9	100.5	110.8	128.2	145.5	158.8	168.5	172.6	173.8

SetID	Date	HR1	HR2	HR3	HR4	HR5	HR6	HR7	HR8	HR9	HR10	HR11	HR12
2007-11LdRC	11/13/2007	107.1	102.2	100.2	99.4	102.4	113.8	131.9	147.1	161.1	172.2	175.5	177.7
2007-11LdRC	11/14/2007	107.5	103.3	100.2	100.7	102.1	113	132.5	148.5	162.2	171.3	173.7	175
2007-11LdRC	11/15/2007	107.6	103.3	100.6	100.5	101.6	112.6	124.3	142.3	154.5	164.6	170.7	171.3
2007-11LdRC	11/16/2007	105.5	100.8	97.1	96.8	98.8	106.8	117.2	133.7	151.5	162.2	167	167.4
2007-11LdRC	11/17/2007	106.4	101.1	98.1	96.8	98.2	103.3	111.1	126.2	145.6	156	158.5	160.3
2007-11LdRC	11/18/2007	106.3	100.9	98.2	97.4	98.2	103.2	110.8	123.1	139.6	149.6	156.3	157.8
2007-11LdRC	11/19/2007	105	99.9	96.3	95.7	98.2	108.8	123.4	139.4	152.1	158.9	164.1	168.3
2007-11LdRC	11/20/2007	107.4	103.2	100.6	99.4	102.7	113	136	147.9	163.5	173.4	178.1	179.5
2007-11LdRC	11/21/2007	104.9	101.3	99	98.3	100.7	111.3	130	144	158.1	169.7	168.9	173.3
2007-11LdRC	11/22/2007	112.2	104.8	100	99.8	102.8	109.5	119.9	136	155.3	171.9	176.6	177.7
2007-11LdRC	11/23/2007	105.9	100.7	99	98.8	101.8	106.1	119.1	132.3	151.6	165.4	170.6	172.2
2007-11LdRC	11/24/2007	106.4	101.1	98.1	96.8	98.2	103.3	111.1	126.2	145.6	156	158.5	160.3
2007-11LdRC	11/25/2007	106.3	100.9	98.2	97.4	98.2	103.2	110.8	123.1	139.6	149.6	156.3	157.8
2007-11LdRC	11/26/2007	106.3	100.8	98.2	98	100.5	111.8	131.6	145.9	166.1	174.5	179.7	181.5
2007-11LdRC	11/27/2007	111.1	106.6	104	103.2	105.7	116.2	137.7	154.3	173.7	180.5	182	182.4
2007-11LdRC	11/28/2007	112.7	106.8	103.3	103.4	107	116.9	137.8	153.8	168.1	175.4	180.8	179.7
2007-11LdRC	11/29/2007	112.2	104.8	100	99.8	102.8	109.5	119.9	136	155.3	171.9	176.6	177.7
2007-11LdRC	11/30/2007	105.9	100.7	99	98.8	101.8	106.1	119.1	132.3	151.6	165.4	170.6	172.2
2007-11LdRC	12/1/2007	110.2	105.9	102.7	101.3	102.8	105.8	112.9	124.1	142	156	162.7	164
2007-11LdRC	12/2/2007	112.7	107.2	104.7	102.8	105.1	108.8	112.8	121.7	135	142.1	149.7	150.9
2007-11LdRC	12/3/2007	107.5	102.4	101.1	99.4	102.2	109.2	123.7	137.8	150.5	165	166.5	169.3
2007-11LdRC	12/4/2007	107.8	104.2	101.5	100.6	102.2	110.7	124.8	138.8	154.5	166.2	169.9	171.7
2007-11LdRC	12/5/2007	104.7	102.5	100.5	99.6	101.5	114.1	123.5	131.3	146.4	157.8	163.7	167.1
2007-11LdRC	12/6/2007	106.4	102.8	100.2	99.5	101.6	109.7	127.4	135.3	147.6	163.4	170.1	172.5
2007-11LdRC	12/7/2007	106.8	102.5	100.7	100.6	103	110.8	127.7	135	149.3	161.7	167.8	171.3
2007-11LdRC	12/8/2007	108.3	104.1	101.4	101	102.3	105.7	113.2	122	133.8	151.5	155.2	160.2
2007-11LdRC	12/9/2007	108.9	104.6	102.7	100.4	101.5	104.8	110.7	121.2	135.4	148.5	152.4	153.7
2007-11LdRC	12/10/2007	104.2	100.7	100.1	101.1	104.2	117.4	133.1	147.1	160.7	167	169.5	169.4
2007-11LdRC	12/11/2007	106.9	102.1	100.9	99.9	102.5	111.2	127	137.9	150.4	159.4	164.4	165.7
2007-11LdRC	12/12/2007	104.5	101.1	98.3	98.4	101	108	118.2	132.6	143	148.9	153.2	155
2007-11LdRC	12/13/2007	105.8	101.8	99.1	98.6	101.2	110	122.3	132.2	150.7	158.9	161.6	162.3
2007-11LdRC	12/14/2007	105.7	102.3	100	100.5	103	110.3	128.8	140.5	142.6	152	163.5	164.8
2007-11LdRC	12/15/2007	107.1	102.9	101.2	100	101.6	106.7	113.2	124	139.9	151.4	153.7	154.5
2007-11LdRC	12/16/2007	106.1	102	100	98.6	99.7	103.4	109.1	118.8	134.2	145.9	149.6	148.8
2007-11LdRC	12/17/2007	104.7	101	99.1	99	101.1	109.4	126	137.4	150.9	162.3	163.3	160.7
2007-11LdRC	12/18/2007	105.6	101.9	99.6	99.4	102	109.6	124.8	135.6	146.7	155	156.9	158.7
2007-11LdRC	12/19/2007	104	100.3	98.3	97.9	100.1	113.2	124.1	134.6	145.9	152.3	153.7	157
2007-11LdRC	12/20/2007	103.5	99	98.8	98	100.1	106.8	121.7	132.8	142.2	153.6	154.3	157.6
2007-11LdRC	12/21/2007	104.8	101.4	99	98.4	100.3	107.9	124.3	130.6	143.7	153	156.7	157.6
2007-11LdRC	12/22/2007	105.1	101.2	99	98.3	100.7	104.7	113.2	122.5	137.6	146.2	150	149.3
2007-11LdRC	12/23/2007	106.7	101.6	99.4	98.8	100.5	105	109.6	119.6	133.6	144.3	144.4	144.6
2007-11LdRC	12/24/2007	107.7	102.8	100.6	99.7	101.6	110	123.6	135.9	150	162	166	165.1
2007-11LdRC	12/25/2007	108.9	102.7	99.7	98.2	99.2	102.5	108.1	116.4	130.3	137.8	139.6	139.8
2007-11LdRC	12/26/2007	105.9	101.5	99.5	99.4	101.5	109	124.4	136.3	150.2	165.1	167.3	167.8
2007-11LdRC	12/27/2007	115	104.3	101.9	100.7	102	108.9	119.8	134.9	153.4	169.1	174.1	172.9
2007-11LdRC	12/28/2007	107.2	104.5	102.4	101.4	107.3	115	123.5	137.5	150.8	160.4	163.9	164.2
2007-11LdRC	12/29/2007	107.9	102.8	100.1	99.6	100.6	104.2	110.7	121	137.8	151.9	154.8	153.3
2007-11LdRC	12/30/2007	108.9	102.7	99.7	98.2	99.2	102.5	108.1	116.4	130.3	137.8	139.6	139.8
2007-11LdRC	12/31/2007	105.6	101.2	99.6	98.6	100.9	104.7	110.7	120.2	136.4	152.3	156.7	157.6

tblHrLoad 2007

SetID	Date	HR1	HR2	HR3	HR4	HR5	HR6	HR7	HR8	HR9	HR10	HR11	HR12
Based on Hour Ending		1	2	3	4	5	6	7	8	9	10	11	12
Total MW by Hour		39,327	37,609	36,664	36,357	37,112	39,849	44,826	50,459	56,317	60,436	61,927	62,298
Total Obs by Hour		365	365	365	365	365	365	365	365	365	365	365	365
Off Peak Hrs MW		39,327	37,609	36,664	36,357	37,112	39,849	44,826					
Total Off Peak Obs by Hour		365	365	365	365	365	365	365					
Mid Peak Hrs MW									50,459	56,317	60,436	61,927	62,298
Mid Peak Obs by Hour									365	365	365	365	365
Priority Peak Hrs MW													
Priority Peak Obs by Hour													
Total MW Check		0.00	0.00	0.00	0.00	0.00	0.00	0.00	0.00	0.00	0.00	0.00	0.00
Total Obs Check		0	0	0	0	0	0	0	0	0	0	0	0
Total Avg. MW			147.42										
Off Peak Avg. MW			115.89										
Mid Peak Avg. MW			166.77										
Priority Peak Avg. MW			182.35										

SetID	Date	HR13	HR14	HR15	HR16	HR17	HR18	HR19	HR20	HR21	HR22	HR23	HR24	DOW
2007-11LdRC	1/1/2007	166.7	165.7	164.6	161.2	168.4	177.6	183.2	174.3	162.5	149.5	132.2	112.1	1
2007-11LdRC	1/2/2007	159.2	162.2	161.1	162.1	164.1	172.6	190.3	185.1	173	153.5	141.9	110.1	2
2007-11LdRC	1/3/2007	162.7	164.2	164.6	165.7	165.8	171.2	190.2	187.6	173.9	154.2	134.5	110.2	3
2007-11LdRC	1/4/2007	166.4	169.3	165.8	167.4	168.5	174	191	187.2	173.9	158.1	133.4	112.4	4
2007-11LdRC	1/5/2007	164.2	164.6	164.3	163.7	164.8	169.1	184.5	180.9	167	153.2	132.6	114.1	5
2007-11LdRC	1/6/2007	166.7	165.7	164.6	161.2	168.4	177.6	183.2	174.3	162.5	149.5	132.2	112.1	6
2007-11LdRC	1/7/2007	163	156.6	152.5	154	158.9	168.4	183	180.3	168.4	149.6	133.8	110.4	7
2007-11LdRC	1/8/2007	165.1	164.7	162.1	164.3	166.5	172.4	191.3	189.7	175.8	155.4	132.3	110.7	1
2007-11LdRC	1/9/2007	159.2	162.2	161.1	162.1	164.1	172.6	190.3	185.1	173	153.5	141.9	110.1	2
2007-11LdRC	1/10/2007	162.7	164.2	164.6	165.7	165.8	171.2	190.2	187.6	173.9	154.2	134.5	110.2	3
2007-11LdRC	1/11/2007	166.4	169.3	165.8	167.4	168.5	174	191	187.2	173.9	158.1	133.4	112.4	4
2007-11LdRC	1/12/2007	164.2	164.6	164.3	163.7	164.8	169.1	184.5	180.9	167	153.2	132.6	114.1	5
2007-11LdRC	1/13/2007	155.8	156.3	158.4	160.1	162.5	169.9	182.1	181.6	169.3	154.9	131.9	114.6	6
2007-11LdRC	1/14/2007	152	149.8	146.6	149.6	151.5	167.3	179.3	174.3	162.3	145.6	124.6	107	7
2007-11LdRC	1/15/2007	158.4	160.9	156.3	160.3	162.6	166.9	187	183.5	170.7	153.2	127.5	107.9	1
2007-11LdRC	1/16/2007	161.6	162.1	160.1	162.5	165.3	165.4	184.8	182.8	167.6	152.7	126.7	106.4	2
2007-11LdRC	1/17/2007	152.7	155.9	157.3	157.6	158	162.6	180.9	179.4	167.4	150.7	125.5	106.3	3
2007-11LdRC	1/18/2007	163.6	162.2	162.1	164.9	166.7	171.8	189.7	187.9	172.7	155.8	129.8	111.1	4
2007-11LdRC	1/19/2007	166.4	164.8	164.8	167.4	166.3	170.3	185.1	177.9	171.9	157.2	137.2	116.8	5
2007-11LdRC	1/20/2007	162.5	162.1	161.2	162.7	167.5	172.8	186	184.3	171.4	158.8	137.7	118.9	6
2007-11LdRC	1/21/2007	162.1	161.6	160.5	161.8	163.3	168.9	186.2	183.8	175.7	163.3	140.9	121.4	7
2007-11LdRC	1/22/2007	176.2	172.6	169.4	169.5	170.2	175.2	194.1	190.8	180.9	165.1	139.5	117.1	1
2007-11LdRC	1/23/2007	169.3	166	164.1	164.5	166	172.2	188.2	187.2	174.3	161.1	130.4	111.8	2
2007-11LdRC	1/24/2007	171.3	169.4	170.4	170.7	171.9	175.9	190.5	187.2	174.5	156.1	132.8	112.2	3
2007-11LdRC	1/25/2007	167.3	165.3	164.5	167.1	168.1	175.7	190.5	187.6	172.7	158.2	132.5	112.2	4
2007-11LdRC	1/26/2007	174.3	173.1	172.4	170.3	168.8	174.4	181.9	176.6	163.5	149.1	129.3	111.7	5
2007-11LdRC	1/27/2007	148.7	148.3	146	150.7	154.9	160.8	173.4	174.7	160.9	146.3	127.4	110.4	6
2007-11LdRC	1/28/2007	156.7	155	157.3	160.5	163.1	164.7	179.1	182.4	169.6	155.4	129.9	112	7
2007-11LdRC	1/29/2007	171.9	171.2	173.3	173.9	175.5	181.4	195.3	195.9	178.1	154.6	134.8	114.2	1
2007-11LdRC	1/30/2007	173	173.9	174.8	174.4	177.9	181.7	197.6	193.8	181	162.1	134.3	113.4	2
2007-11LdRC	1/31/2007	173.7	173.7	175.3	175.8	176.5	177.3	190.8	192.1	179.1	160.6	135.8	114.7	3
2007-11LdRC	2/1/2007	164.8	170.6	171.6	174.3	174.2	176.7	191.7	191.8	178.1	161.2	135.7	115.8	4
2007-11LdRC	2/2/2007	172	175	174.2	176.1	176.4	177.1	185.7	185.1	171	157	137.8	117.7	5
2007-11LdRC	2/3/2007	160.9	162.1	161.8	162.8	167	172	179.3	176.2	165.1	150.1	131	112.7	6
2007-11LdRC	2/4/2007	157	157.1	159.3	161.1	166	169.7	182.1	183.8	173.4	153.5	131.1	109.9	7
2007-11LdRC	2/5/2007	170.5	171.6	170.9	172.5	174	173.4	193.5	192.4	179.6	160.4	136.1	115.8	1
2007-11LdRC	2/6/2007	161.3	158.8	156.8	157.4	161.1	168.8	186.6	183.6	170.8	149.7	125.4	106.4	2
2007-11LdRC	2/7/2007	158.9	156.2	155.7	158.8	163.1	170.2	184.4	182.3	168.7	149	123.5	103.7	3
2007-11LdRC	2/8/2007	156.8	155.8	152	155.4	162.6	170.6	188.4	183.6	168.8	149	126.7	106	4
2007-11LdRC	2/9/2007	160.7	160	158.9	161.3	165.8	169.5	182.3	180.1	169.4	152	131.5	110.8	5
2007-11LdRC	2/10/2007	161.3	161.8	162.6	167.7	174.7	174	185.8	188.9	174.8	156.5	131.4	112.3	6
2007-11LdRC	2/11/2007	167.3	167.7	164.1	166	167	169.5	184.1	193.8	180.9	159.4	132.6	111.2	7
2007-11LdRC	2/12/2007	178.9	177.6	178.2	180.2	181.3	182.4	195.4	195.8	185.1	164.9	137.5	114 4	1
2007-11LdRC	2/13/2007	173.1	173.9	171.8	175.9	174.8	178	189.6	193.8	180.9	163.3	133.7	111.3	2
2007-11LdRC	2/14/2007	173.4	172.2	174.6	176.4	178.3	180	189.8	191.9	179.3	163.7	137.5	113.7	3
2007-11LdRC	2/15/2007	170.5	173.7	173.8	176.6	176.5	177	188.4	193	179.9	161.2	134.2	111.9	4
2007-11LdRC	2/16/2007	167.6	168	168.1	168.8	165.8	170.5	183.1	181.8	172.6	156	130.5	112.4	5
2007-11LdRC	2/17/2007	148.5	147.3	147.7	150.2	153.5	159.8	172.7	173.5	162.1	148.8	126.7	109.6	6
2007-11LdRC	2/18/2007	144	143.8	142.6	143.8	148.9	155.4	169.7	175.6	162.5	147.5	123.3	101.5	7
2007-11LdRC	2/19/2007	158.4	159.4	158.6	160.4	161.6	165.3	176.8	181.6	168.8	149.7	125.4	106.8	1
2007-11LdRC	2/20/2007	159.7	163.7	163.8	165	166.4	169.9	183.1	185.6	176.2	154.2	126.8	108.3	2
2007-11LdRC	2/21/2007	162.1	160.5	159.3	162.2	163.7	167.2	180.1	186.1	170.6	153.5	129	107.7	3
2007-11LdRC	2/22/2007	162.4	160.7	162.4	166.1	168.3	168.8	181.5	187	172.9	156.2	132.8	108.7	4
2007-11LdRC	2/23/2007	162.9	163	165.5	165.9	163.7	165.7	177.5	180.3	166.5	155.9	131.6	113.2	5
2007-11LdRC	2/24/2007	149.2	146.7	146.4	148.2	154.5	159.1	168.8	172.4	161	147.4	126.9	109.2	6
2007-11LdRC	2/25/2007	145.3	144.1	145.8	149.1	152.2	156.9	169.1	176.4	164.6	148.5	125.5	108.4	7
2007-11LdRC	2/26/2007	153.4	153.7	156.2	157.9	164.2	168.4	182.3	189	174.6	156.6	126.5	108.2	1
2007-11LdRC	2/27/2007	160.7	161.2	164.9	169.4	170.1	173.4	183.8	191.5	178.6	144.8	131.2	110.2	2
2007-11LdRC	2/28/2007	165	164.9	167	168.3	169.9	171.6	181.2	189	176.2	160.7	133.5	112.9	3
2007-11LdRC	3/1/2007	167.6	168.8	169.5	170.9	172.1	172.9	182.3	191.2	178.8	162.2	134.9	113.6	4
2007-11LdRC	3/2/2007	168.1	166.3	164.8	166.1	165.4	166.3	173.1	177.7	167.8	154.1	130.8	113.3	5
2007-11LdRC	3/3/2007	155.9	154.4	155.2	157.8	161.9	165.1	173.8	178.6	167.1	152.2	132.4	112.9	6
2007-11LdRC	3/4/2007	152.2	154	153.9	155.6	160.5	166.2	174.9	181.1	169.2	149.9	127.4	106.8	7
2007-11LdRC	3/5/2007	165	165.4	166.9	169.6	167.3	170.9	181.4	188.5	176.7	157.4	132.1	111.3	1
2007-11LdRC	3/6/2007	162.7	164	164.9	168.8	169.8	170	177.6	183.3	173	156.2	133.1	110.1	2
2007-11LdRC	3/7/2007	162.4	164	165.5	167.2	168.2	170.1	178.9	184.1	173.3	158.4	132	109.6	3
2007-11LdRC	3/8/2007	165.6	167.7	166.4	168.5	172.4	170.9	179.6	186.3	176.5	153.8	135.4	112.8	4
2007-11LdRC	3/9/2007	167.4	168.2	169.8	170.9	167.8	167.7	175.8	179	168.6	155.6	135.5	116.4	5
2007-11LdRC	3/10/2007	162.4	159.6	161.5	164.3	166.2	168.6	174	180.1	169.6	156.6	137.5	118.3	6
2007-11LdRC	3/11/2007	155.4	156.9	156	155.7	160.3	165	175	183.8	173.5	156.2	133	113.8	7
2007-11LdRC	3/12/2007	170.9	172.7	173.8	175	174.8	176.5	184.1	192	182.1	166	141.7	118.6	1
2007-11LdRC	3/13/2007	180	180.9	182.4	183.7	182.8	182.8	190.5	195.5	186	170.8	146.1	124	2
2007-11LdRC	3/14/2007	171	167.3	167.2	169.8	170.3	174.1	187	190.9	178.4	163.2	138	114.8	3
2007-11LdRC	3/15/2007	158.2	156.6	155.7	156.4	160.1	164.7	174.4	177.7	167.5	151.7	129	109	4
2007-11LdRC	3/16/2007	158.7	158.5	159	159.3	161.1	163.4	170.9	177.3	164.7	154.3	131.4	113.4	5
2007-11LdRC	3/17/2007	155.7	151.9	148.5	148.6	152.2	155.2	164.2	170	160.6	145.7	125.8	107.8	6
2007-11LdRC	3/18/2007	143.8	144.8	145.3	145.9	151.6	157.3	166.2	170.8	162.7	145	121.6	103.5	7
2007-11LdRC	3/19/2007	151.3	149.4	147.8	149.2	151.3	157.3	167.3	180.3	169.1	151.6	125.4	106.4	1
2007-11LdRC	3/20/2007	151.6	150.6	147.7	148.5	150.8	154.2	167.7	176.7	167.2	152.4	123.8	103.9	2

SetID	Date	HR13	HR14	HR15	HR16	HR17	HR18	HR19	HR20	HR21	HR22	HR23	HR24	DOW
2007-11LdRC	3/21/2007	150.2	148.4	152.8	154.6	156.8	160.4	171.8	177.8	168.4	151.6	127.1	106.5	3
2007-11LdRC	3/22/2007	158.6	160.1	159.9	163.5	164.3	166	170.4	178.5	168.8	154.4	129.7	109.7	4
2007-11LdRC	3/23/2007	159.7	159.6	158.9	159.7	159.4	163.7	174.9	174.9	166.2	153	132.4	113.4	5
2007-11LdRC	3/24/2007	153.6	150.7	151.2	151.9	156.9	161.3	171.2	174	164.7	152.9	131.9	113.4	6
2007-11LdRC	3/25/2007	151.9	150.7	150.7	151.7	154.7	160.1	167.7	176.3	167.2	152.7	131.7	112.6	7
2007-11LdRC	3/26/2007	168	167.4	169.8	171.8	171.5	174.5	181.1	189.2	178.4	163.2	136.9	117	1
2007-11LdRC	3/27/2007	170.9	171.5	174.4	175.8	178.4	179.8	184.5	192.1	182.1	169.3	141.5	121.3	2
2007-11LdRC	3/28/2007	177.1	177.7	177.8	180.4	182.8	182.6	188.7	195.2	187	172	147.6	124.9	3
2007-11LdRC	3/29/2007	181.8	184.3	186.5	185.5	185.6	185.5	189.8	194.8	185.5	171.3	145.5	125	4
2007-11LdRC	3/30/2007	177.1	177.3	176.3	176.1	176.3	180.2	187.1	188	178.5	165	143.8	122.7	5
2007-11LdRC	3/31/2007	156.7	153	151.9	151.2	155.6	161.4	170.8	173.4	163.3	152.8	131	114.1	6
2007-11LdRC	4/1/2007	145.9	143.2	144	145.4	151.3	157	162.3	170.9	162.9	149.1	126.9	106.9	7
2007-11LdRC	4/2/2007	163.1	163.3	163.2	165.1	169.2	174.3	181.4	191.9	178.7	158.4	136.1	113.5	1
2007-11LdRC	4/3/2007	168.4	167.9	168.8	171.3	169.5	176.5	184.9	190.7	180.2	163.7	138.8	114.9	2
2007-11LdRC	4/4/2007	174.7	174.2	173.7	174.7	174.8	177.7	184.8	188.7	177.8	160.9	138.1	113.6	3
2007-11LdRC	4/5/2007	168.9	169	169.3	168.7	168.8	171.4	178.4	187.1	176.5	157.9	137.1	114.8	4
2007-11LdRC	4/6/2007	165.9	164.9	165.8	165.8	165.4	165.8	177	170.1	164.6	153.8	123.2	107.7	5
2007-11LdRC	4/7/2007	154.8	156.3	154.5	154.9	158.3	163.2	170.6	175	162.1	145.6	124	105.4	6
2007-11LdRC	4/8/2007	150.4	151.3	153.2	152.3	160.9	161.2	175.1	172.4	158.9	146	118.9	103.2	7
2007-11LdRC	4/9/2007	163	165.9	163.6	166.7	165.1	165.6	179.1	180.1	162.5	152	117.8	104.6	1
2007-11LdRC	4/10/2007	165.4	164.8	168	164	165.6	170.1	185.5	178.4	165.1	151.2	119.3	105.1	2
2007-11LdRC	4/11/2007	164.4	165.4	166.4	165.8	166.9	169.6	180.1	183.8	170.8	151.6	123	105.4	3
2007-11LdRC	4/12/2007	166.8	168.2	170.2	170.5	169.4	170.9	180.5	184.5	176.5	156.1	123.4	107.1	4
2007-11LdRC	4/13/2007	173.2	173.7	174.7	174.7	178.7	177.1	184.4	181.5	174.1	158.9	140.1	120.9	5
2007-11LdRC	4/14/2007	164	160.9	160.7	160.6	165.9	168.5	174.4	182	171.8	152.8	134.8	118.3	6
2007-11LdRC	4/15/2007	154.8	154.2	156.5	157.8	162.7	167.3	175.8	176.7	167.2	153.2	133.1	113.2	7
2007-11LdRC	4/16/2007	175	172.9	174.6	174.6	173.7	175.1	184.7	190.4	181.8	155	142.3	118	1
2007-11LdRC	4/17/2007	171.2	170.9	169.8	169.7	171.2	173.5	182.4	191.4	181.4	160.9	134.1	115.3	2
2007-11LdRC	4/18/2007	173.1	173.7	175.1	175.1	173.6	174.3	179.5	189.5	176.8	160.5	135.3	118	3
2007-11LdRC	4/19/2007	174.6	173.7	174.1	175	175.5	176.4	182	192.2	182.2	158.4	135.9	116.5	4
2007-11LdRC	4/20/2007	173.6	173.3	172.2	173.9	172.9	171.8	175.8	181.7	171.2	158.8	135.5	119.3	5
2007-11LdRC	4/21/2007	163.1	160.4	160.9	163	166.2	168	171.7	179.1	169.7	155.2	134.4	118.3	6
2007-11LdRC	4/22/2007	158.3	157.3	157.3	159	163.4	168.1	172.7	184.2	166.3	151.8	122.3	107.8	7
2007-11LdRC	4/23/2007	174.4	174.6	175.9	175.7	174.1	176.1	185.3	184.2	174.6	154.5	121.3	107.5	1
2007-11LdRC	4/24/2007	170.2	168.2	167.7	171.2	167.6	170.9	187.8	181.6	167.3	151.7	121.9	105.3	2
2007-11LdRC	4/25/2007	170.4	168	170.2	170.9	169.6	170.1	174.3	184.8	173.3	157.9	132.8	114.4	3
2007-11LdRC	4/26/2007	168	170.6	171.2	173.5	172.2	172.7	177.4	188.2	178.1	162	133.8	115.4	4
2007-11LdRC	4/27/2007	167.7	170.1	170.6	170.9	169.3	167.6	168.4	174.4	164.2	153.5	132.2	115	5
2007-11LdRC	4/28/2007	155.2	155.4	154.1	155.4	157.4	160.2	165.8	170.4	162.9	144.3	127.7	112.1	6
2007-11LdRC	4/29/2007	149.1	149.7	149	149.9	154.2	158.4	164	173.3	162.8	143.8	126.1	110.2	7
2007-11LdRC	4/30/2007	166.7	166.8	166.3	168.5	168.8	168.9	173.2	184.2	173.3	155.3	128.8	110.1	1
2007-11LdRC	5/1/2007	161.9	164	164.6	167.7	168.4	165.2	170.7	180.8	170.5	149.5	125.8	106.8	2
2007-11LdRC	5/2/2007	166.3	170.4	170.3	171.2	170.5	169.7	175.2	187.5	173.1	144.6	130	112.8	3
2007-11LdRC	5/3/2007	154.5	154.9	159.6	159.2	159.9	165.2	176.1	172.2	159.1	144.6	125.1	108.9	4
2007-11LdRC	5/4/2007	164	162.6	164.2	166.4	165.6	164.4	167.5	174.7	163.9	151.1	129.4	112.6	5
2007-11LdRC	5/5/2007	152.2	153.2	155.3	156.7	159.8	162.4	167.9	173.1	162.4	149.2	129.2	109.8	6
2007-11LdRC	5/6/2007	150.1	151.7	152	154.9	157.5	162.5	167.2	177.4	168	150.9	129	114.3	7
2007-11LdRC	5/7/2007	171.1	173.1	173.4	173.4	171.8	171.4	174.8	186.8	175.8	158.8	133.3	111.5	1
2007-11LdRC	5/8/2007	175.2	177.1	177.6	178	176.1	177.8	182.6	190.7	179.8	162.5	136.2	115.8	2
2007-11LdRC	5/9/2007	176.4	177.5	180.3	181.1	181.8	179.1	181.9	192.8	182.2	164.3	134.8	116.3	3
2007-11LdRC	5/10/2007	175.9	179.3	181.7	184.3	181.9	179.3	179.7	190.6	181.2	164.4	138.8	119.2	4
2007-11LdRC	5/11/2007	178.3	182.7	181.6	179.5	177.9	174.4	173.1	183	174.9	161.4	139.8	121.3	5
2007-11LdRC	5/12/2007	160.8	161.6	163.1	164.1	165.1	166	167.3	176	167.5	157.8	135.3	118.5	6
2007-11LdRC	5/13/2007	153.5	154	155.6	156.7	159.8	162.6	165.3	173.3	165.9	151.7	131.4	114.9	7
2007-11LdRC	5/14/2007	178.4	179.9	179	177.4	174.9	172.6	178.2	189.1	177.4	161.8	133.1	115.5	1
2007-11LdRC	5/15/2007	172.6	174.8	176.7	179.3	177	173.6	177.1	189.4	178.7	161.4	135.2	114.3	2
2007-11LdRC	5/16/2007	175.2	175.5	179.5	181.3	179.9	176.5	178.7	188.3	178.2	162.2	134.9	115.8	3
2007-11LdRC	5/17/2007	174.4	177.4	176.3	176.8	174.4	172.8	173.6	184.5	178	161.7	136.9	115.7	4
2007-11LdRC	*5/18/2007*	*175.2*	*177*	*176.9*	*174*	*169.8*	*168.5*	*170.9*	*180.9*	*170.3*	*145.8*	*136.4*	*118.2*	*5*
2007-11LdRC	5/19/2007	163.1	163.4	164	165.6	166.5	167.8	169.8	171.8	166.9	151.6	126.8	111.4	6
2007-11LdRC	5/20/2007	156.1	156.1	157.5	161.4	165.5	166.7	171.3	178.7	174.7	148.9	121.6	110.9	7
2007-11LdRC	5/21/2007	178.6	178.3	179.3	180.5	179.7	176.1	176.4	187.4	178.6	161.8	136.1	115.2	1
2007-11LdRC	5/22/2007	177.9	178.4	179.9	179	178.2	175.9	177.2	187.8	179.8	161.8	135.9	117.9	2
2007-11LdRC	5/23/2007	177.4	178.3	178.2	177.2	173.4	170.5	175.1	184.7	177.4	162.2	138	117	3
2007-11LdRC	5/24/2007	170.1	167.7	165.5	165.1	166.1	165.3	169.3	176	169	152.7	129.6	112.6	4
2007-11LdRC	5/25/2007	170.5	173.9	172.6	173.2	171.2	168.9	169.7	175.6	169.3	156.4	136.4	117.7	5
2007-11LdRC	5/26/2007	166.1	157.6	159.5	159.7	161.9	163.6	166.3	171.9	166.7	149.9	135.3	117.9	6
2007-11LdRC	5/27/2007	159.6	160.4	159.5	160.8	163.9	167.8	171.9	178	173.2	160.8	127.2	115.9	7
2007-11LdRC	5/28/2007	159.6	160.2	162.5	164.5	168	171	175.5	181.7	176	155.1	137.6	118.1	1
2007-11LdRC	5/29/2007	179.7	180.3	180.4	178.2	179.1	175.6	178	187.1	182.6	164.3	137.4	118.9	2
2007-11LdRC	5/30/2007	177.4	178.3	178.2	177.2	173.4	170.5	175.1	184.7	177.4	162.2	138	117	3
2007-11LdRC	5/31/2007	178.3	179.9	180.7	182.9	180.3	177	175.8	186.7	180.4	165.5	138.5	119.6	4
2007-11LdRC	6/1/2007	180	180.3	180.6	180.7	178.4	176	174.9	180.9	174.7	164.1	143.9	129.7	5
2007-11LdRC	6/2/2007	168.9	169.3	169.6	169.7	168.3	171.8	173.8	176	173.3	162.2	143.6	126.8	6
2007-11LdRC	6/3/2007	163.4	163.5	164.7	166.2	167.4	169.6	170.5	177.9	172.6	161	140.5	119.7	7
2007-11LdRC	6/4/2007	165.2	165.8	167.9	169.7	172.8	175.3	179.1	183.9	179.5	161	143.3	121.2	1
2007-11LdRC	6/5/2007	182.2	185.7	186.5	189.3	188.2	185.3	186.2	192.9	189.4	175.4	150.2	127.3	2
2007-11LdRC	6/6/2007	181.5	182.8	185.8	187.8	187.8	185.6	186	193.3	187	174	148.9	126.5	3
2007-11LdRC	6/7/2007	183.7	183.3	184.6	185.6	183.4	180.8	181.2	188	184.6	171.4	147.5	125.5	4

SetID	Date	HR13	HR14	HR15	HR16	HR17	HR18	HR19	HR20	HR21	HR22	HR23	HR24	DOW
2007-11LdRC	6/8/2007	184.4	184.9	185.6	186.7	186	182.8	181.5	186.9	182.5	170.5	150.4	130.8	5
2007-11LdRC	6/9/2007	174.1	172.9	173.4	174.6	176.6	175.6	175.8	181.1	177.3	166.4	147.3	127.7	6
2007-11LdRC	6/10/2007	165.9	165.3	167	168.4	171.5	173.1	172.8	181.4	178.4	165.9	144.3	124	7
2007-11LdRC	6/11/2007	180.9	183.4	184.6	184.5	182.7	178.9	179.6	187.5	183.5	169.5	145.4	122.8	1
2007-11LdRC	6/12/2007	179.8	181.3	182.1	183.6	181.7	178.4	178.3	185.8	180.8	158.9	144.8	123.4	2
2007-11LdRC	6/13/2007	181.9	182.3	184.1	184.9	184.4	180.8	180.5	187.2	182.3	170.2	146.8	124.5	3
2007-11LdRC	6/14/2007	181.9	183.1	183.1	184.8	184.3	178.6	179.2	185.5	180.9	167.4	146	133.6	4
2007-11LdRC	6/15/2007	176.7	177	177.1	179.8	181.3	180.8	177.1	183.3	178.8	166.8	146.8	130	5
2007-11LdRC	6/16/2007	167.1	168.9	168.9	170.4	171.3	173.2	171.8	177.8	174.7	161.9	141.6	127.5	6
2007-11LdRC	6/17/2007	161.9	160.3	162.7	164.2	169.2	170.6	172.3	179.9	176	163.6	143.1	123.2	7
2007-11LdRC	6/18/2007	185.1	181.1	186.2	186.6	185.7	184.8	183.7	190.3	186.5	172.7	149.3	127.7	1
2007-11LdRC	6/19/2007	182.8	185.2	186.5	187.2	183.6	182.5	183.1	187	186.5	172.7	148.5	126.3	2
2007-11LdRC	6/20/2007	180.3	184.9	185.3	184.1	184.6	181.5	179.2	185.6	182.8	168.8	146.8	126.5	3
2007-11LdRC	6/21/2007	181.1	183.8	186.3	186.8	186	182.7	181.7	187.7	186	173.4	150	128	4
2007-11LdRC	6/22/2007	182.3	180.8	182.3	184.5	183.7	182.1	179.6	184	181	169.6	137.2	127.4	5
2007-11LdRC	6/23/2007	170.7	169.9	172	173.3	175.4	175.1	173.8	179.4	176.2	166.2	146.3	127.8	6
2007-11LdRC	6/24/2007	166	165.3	165.8	168.7	170.7	170.1	170.6	176.2	173.8	163.5	146.1	124.6	7
2007-11LdRC	6/25/2007	184.5	182.4	181.4	178.7	177.5	177.5	179.8	185.9	182.3	167.8	146.1	125.8	1
2007-11LdRC	6/26/2007	177.4	178	178.2	177.5	177.1	178.1	180.8	182.7	178.5	150.3	139.4	124	2
2007-11LdRC	6/27/2007	179.2	179.4	179.5	178.4	177.3	178.5	182.1	186.6	181.8	168.3	151.5	123.4	3
2007-11LdRC	6/28/2007	181.5	182.5	184.4	185.4	182.8	179.2	180.5	186.5	182.2	152.6	138.4	124.6	4
2007-11LdRC	6/29/2007	181	182	182.2	178.7	176.5	177	178.6	181.7	177	168.9	145.6	127.5	5
2007-11LdRC	6/30/2007	171.3	172.4	173.6	174.7	176.3	176.6	175.1	180.2	174.8	162.6	145.6	127.5	6
2007-11LdRC	7/1/2007	160	159.7	160.3	161.4	164.2	167	170.5	177.7	174.6	158.7	138.4	121	7
2007-11LdRC	7/2/2007	181	179.6	179.4	177.9	177.2	176.7	177.6	188.1	186	163	142.9	121.9	1
2007-11LdRC	7/3/2007	181.7	180.4	183.4	182	181.8	181	181.1	190.9	186.2	171.3	142.9	124	2
2007-11LdRC	7/4/2007	168.7	168.8	169.7	172	174.6	175.1	171.4	171	163.6	162.4	142.7	126.3	3
2007-11LdRC	7/5/2007	188.2	186.5	187	185.3	185.5	184.1	183	191.9	188.9	172.6	146.8	125.2	4
2007-11LdRC	7/6/2007	180.5	183.2	187.1	188.5	186.5	183.8	180.2	184	181.1	167.9	145.1	125.9	5
2007-11LdRC	7/7/2007	164.1	165.6	166.8	168.4	171	171.5	172.8	178.6	176.3	162.3	140.4	123	6
2007-11LdRC	7/8/2007	158.1	158.6	159.5	161.1	164	166.7	169.7	177.2	175.3	161.5	140	121.9	7
2007-11LdRC	7/9/2007	168.7	168.8	169.7	172	174.6	175.1	171.4	171	163 6	162.4	142.7	126.3	1
2007-11LdRC	7/10/2007	190.9	191.9	192.1	189.9	187.9	186	187.5	195.4	192.7	173	146.1	125.4	2
2007-11LdRC	7/11/2007	186	188.1	189.5	191.2	189.8	187.9	186.7	195.4	191.1	171.4	148.4	129.5	3
2007-11LdRC	7/12/2007	184.5	182.9	182.7	182.5	180.9	181.1	183.6	196	185	170.5	144.6	124	4
2007-11LdRC	7/13/2007	186.1	184.9	187.9	183.9	181.8	179.8	180.6	186.2	182	166.9	144.1	126.3	5
2007-11LdRC	7/14/2007	174	172.5	171.6	173.7	174.5	176.2	175.7	181.6	179.3	165.5	142.6	124.5	6
2007-11LdRC	7/15/2007	164.5	164.1	162.1	163.7	168.2	172.9	174	180.5	177.6	163.7	140.6	122.8	7
2007-11LdRC	7/16/2007	188.1	191.2	192.7	190.2	187.1	186	186.2	196.4	188.7	171.7	145.5	124.6	1
2007-11LdRC	7/17/2007	184.6	184.9	186.7	188.5	188.1	185.4	186.7	195.5	191.8	172.4	144.6	124.9	2
2007-11LdRC	7/18/2007	186.4	186.1	189.8	190.2	189.7	188.5	186.9	195.4	189.4	173.2	145.9	125.1	3
2007-11LdRC	7/19/2007	188.1	190.2	192.4	193.7	191.3	188.5	188.2	196.1	193.5	174.5	148.8	127.1	4
2007-11LdRC	7/20/2007	182.9	184.9	184.3	182.7	183.2	180.5	179.9	187.4	182.2	157.7	146.3	126.7	5
2007-11LdRC	7/21/2007	175.3	176.7	176.4	175.7	179.8	180.4	178.3	186	180.9	168.4	144	125.5	6
2007-11LdRC	7/22/2007	164.3	166.8	165.5	167.9	170.6	174.1	175.7	185	182.4	165.6	142.4	123.4	7
2007-11LdRC	7/23/2007	187.8	191.3	188.8	188.8	189.8	186.9	186.2	196	192.1	173.6	146.7	126.1	1
2007-11LdRC	7/24/2007	190.5	190.5	192.2	190.2	187.2	184.9	184.7	193.8	189.5	171.6	145.1	125.2	2
2007-11LdRC	7/25/2007	182.2	182.8	182	184.3	185.2	183.5	184.3	193 4	190.1	170.6	143.7	123.2	3
2007-11LdRC	7/26/2007	175.9	177.8	179.8	179.9	181.1	179.9	179.9	192.9	187.5	170.7	143.3	123.8	4
2007-11LdRC	7/27/2007	186	184.6	187.1	185.3	185.2	181.6	179.8	187.2	183.5	171.9	146.3	126.8	5
2007-11LdRC	7/28/2007	174.5	175.5	176.2	177.8	180.9	181.8	180.5	187.7	182.1	170.1	146.1	127.2	6
2007-11LdRC	7/29/2007	167.2	166.8	169.5	171.9	175.1	177.8	180.9	191.3	186.1	170.1	144.6	125.1	7
2007-11LdRC	7/30/2007	196.7	199.6	198.8	199	196.7	192.8	191.2	202.4	196.9	180.6	151.6	130.3	1
2007-11LdRC	7/31/2007	191.9	194.8	198.8	198.4	197.3	191.5	190.8	199.6	195.4	177.6	146.9	125.6	2
2007-11LdRC	8/1/2007	190.1	193.1	194.1	190.5	192.3	190.7	188.9	196.2	189.4	173.9	149.5	128.3	3
2007-11LdRC	8/2/2007	192.2	190.5	193.2	195.3	193.6	192	194.1	200.8	194.5	177.6	149.2	127.7	4
2007-11LdRC	8/3/2007	187.8	186.8	187.1	186.4	185.5	182.1	181.2	186.8	184	171	148.7	129.1	5
2007-11LdRC	8/4/2007	174.4	175.1	177.1	175.9	178.3	180.8	179.9	186.3	183.3	171.1	147.2	128.2	6
2007-11LdRC	8/5/2007	169.7	170.8	171.7	173.2	174.8	176.6	178.2	189.6	187	171.7	145.5	125.2	7
2007-11LdRC	8/6/2007	189.6	189.5	191.4	191.8	190.6	188.1	189.4	201.7	195.4	178.5	150	128	1
2007-11LdRC	8/7/2007	191.6	192	194	194.3	192.3	189.5	191.4	201.5	195.6	179.3	149.1	127.4	2
2007-11LdRC	8/8/2007	190.8	193.4	192.5	191.4	188.8	187.2	185.6	193.4	188.1	173.1	148	126	3
2007-11LdRC	8/9/2007	183.2	185.5	187.4	190.5	188.3	187.4	185.7	193.5	188.6	174.2	145.5	124.9	4
2007-11LdRC	8/10/2007	183.2	186.6	187.9	189.6	189.3	186.9	185.9	192.9	186.8	172.9	150.5	129.4	5
2007-11LdRC	8/11/2007	173.8	175.6	176.9	177.7	179.6	181.2	183.6	190.9	184.6	171.2	149.1	128.7	6
2007-11LdRC	8/12/2007	172	173.2	172.1	173.4	176.1	180.7	183.2	192.9	184.6	168.4	146.6	127.4	7
2007-11LdRC	8/13/2007	198.9	200.9	202.5	202.9	199.9	197	199.3	208.8	201.5	180.4	152	129.7	1
2007-11LdRC	8/14/2007	199.1	200.7	203.2	203.4	199.1	192.4	192.6	202.5	196.8	176.7	149.8	128.7	2
2007-11LdRC	8/15/2007	197.6	200.2	200.5	200.4	198.1	197.3	197	206.9	198.4	181.6	154.4	130.9	3
2007-11LdRC	8/16/2007	194.6	197.4	196.6	197.3	194.5	193.4	194	204.5	197.3	178	149.8	127.7	4
2007-11LdRC	8/17/2007	189.3	190	192.3	194.9	194.3	189.6	187.2	195.4	187.5	170.1	149.2	128.3	5
2007-11LdRC	8/18/2007	173.2	175.1	175.1	178	181.6	183	183.2	191.6	182.5	168.2	145.4	126.7	6
2007-11LdRC	8/19/2007	165.7	166.6	170.1	170.1	173.2	176.9	180.3	190.9	183.6	167.2	144.6	124.4	7
2007-11LdRC	8/20/2007	196.3	195.1	195.1	192.3	192.6	191.6	193.7	206.3	196.8	176.3	149.6	127.7	1
2007-11LdRC	8/21/2007	191.4	192.9	190.2	189.3	188.7	186.9	187.8	198.4	189.7	172.1	147.2	128.3	2
2007-11LdRC	8/22/2007	189.5	193.2	190.9	191.7	190.6	188.3	188.3	199.4	191.1	172.7	147.5	127	3
2007-11LdRC	8/23/2007	191.6	193.8	195.6	195.3	192.1	186.1	187.2	196.3	188.3	172.5	149.1	134.1	4
2007-11LdRC	8/24/2007	185.9	185.9	186.9	187.1	188.1	187.2	197.3	196.2	186.1	168.6	150.5	131.4	5
2007-11LdRC	8/25/2007	174	175.1	175.5	175.3	176.2	176.1	175	185.3	177	163.9	142.6	124.3	6

SetID	Date	HR13	HR14	HR15	HR16	HR17	HR18	HR19	HR20	HR21	HR22	HR23	HR24	DOW
2007-11LdRC	8/26/2007	163.1	165.4	167.4	170.2	172.6	174.4	176.9	188.3	181.9	162.7	140.7	122.9	7
2007-11LdRC	8/27/2007	189.5	191.8	189.5	192.4	189	188.2	189.9	202.4	190.6	170.4	142.9	123.7	1
2007-11LdRC	8/28/2007	184.9	188.7	186.3	183.3	182.6	178.8	182.8	197	185.7	166.8	140.6	121	2
2007-11LdRC	8/29/2007	184.8	187.5	189.5	189.6	187.1	186.2	187.8	197.8	187.2	168.7	143	123.9	3
2007-11LdRC	8/30/2007	188.8	189.6	190.8	191.7	190.9	186.1	189.6	202.1	190.6	171.5	144.6	125.1	4
2007-11LdRC	8/31/2007	188.2	189.6	190.9	194.1	191.8	187.1	185.2	197.1	187.5	173.1	151	130.3	5
2007-11LdRC	9/1/2007	172	171.1	174.6	175.4	176.6	174.2	175.4	181.1	171.9	157.8	138.6	122.9	6
2007-11LdRC	9/2/2007	159.2	157.3	157.9	158.9	162.3	165.9	172.4	186.2	175.6	160	135.9	119.1	7
2007-11LdRC	9/3/2007	176.2	177.1	177	176.7	179	181.3	184.9	198.7	186	166.6	142.2	124.4	1
2007-11LdRC	9/4/2007	191.2	193.3	194.4	193.4	187.2	183.9	190.1	201.6	189.2	168.9	141.5	123.4	2
2007-11LdRC	9/5/2007	181.4	184.3	186.4	186.5	183.8	182.9	184.5	195.5	184	164.7	139.4	121.6	3
2007-11LdRC	9/6/2007	188.2	192.2	191.7	190.8	188.3	187.2	188.9	201.2	188.7	169.7	143.5	123.7	4
2007-11LdRC	9/7/2007	187.2	191.4	192.5	192.2	189.7	183.4	183	193.8	178.9	167.7	146.2	128.1	5
2007-11LdRC	9/8/2007	176.7	178.4	178.6	178.9	177.7	177.3	181.5	186.5	177.5	164	143	125.8	6
2007-11LdRC	9/9/2007	166.1	174	169.3	169.2	169.8	167.6	177.7	188.2	175.8	162.9	142.9	126.2	7
2007-11LdRC	9/10/2007	176.2	177.1	177	176.7	179	181.3	184.9	198.7	186	166.6	142.2	124.4	1
2007-11LdRC	9/11/2007	185.3	190.4	187.9	187.4	186.5	181.7	188.3	199.1	184.5	164.9	139.7	121.3	2
2007-11LdRC	9/12/2007	183.5	184.6	187.6	188	186.5	182.1	185.6	197.4	189.4	163.6	139.9	121.9	3
2007-11LdRC	9/13/2007	184.5	186.3	188.7	190	187.6	181.8	186.5	198.2	185.6	167.2	140.8	121.5	4
2007-11LdRC	9/14/2007	186.3	186.8	188.5	191.7	189.1	183.5	188.2	193.1	180	166.9	143.8	129.3	5
2007-11LdRC	9/15/2007	179.2	179.3	180.2	180.1	181.5	179.7	181.7	186.8	176.1	163.4	144	127.1	6
2007-11LdRC	9/16/2007	166.3	167.4	169	169.5	172.6	172.6	179.6	191.4	178.3	161.8	139.5	121.7	7
2007-11LdRC	9/17/2007	189.6	187.9	186.3	184.2	181.8	179.7	187.1	196.1	181.7	164.2	139.3	122.6	1
2007-11LdRC	9/18/2007	188.6	187.6	191.4	190.3	187.4	184.8	193.5	202.8	188.9	171	143.5	124.5	2
2007-11LdRC	9/19/2007	181.5	184.6	188.5	186.4	183.1	180.5	186.4	196.8	185.3	156.9	142.2	122.7	3
2007-11LdRC	9/20/2007	182.5	181.3	179.6	180.1	178	175.4	188.6	194.4	183.4	161	139.3	121.9	4
2007-11LdRC	9/21/2007	183.9	184.9	181.8	180.6	176.3	172.8	183.1	183.8	172	157.8	140.3	123.4	5
2007-11LdRC	9/22/2007	166.4	167.9	166.8	168.1	170	171.7	174.5	180.6	168.6	151.6	135.1	123.6	6
2007-11LdRC	9/23/2007	158.6	159.6	160	160.3	163.3	165.5	174.8	180.5	167.4	152	133.2	117.8	7
2007-11LdRC	9/24/2007	176.4	178.9	179	178.6	178.3	175.5	186.4	193.4	179	159.8	135.4	118.9	1
2007-11LdRC	9/25/2007	179	182.1	182.5	183.9	181.4	177.5	187.1	193.9	178	152.4	136	119.6	2
2007-11LdRC	9/26/2007	179.7	177.2	180	181	179.8	178.9	188.2	191.7	175.8	157.9	136.5	120.4	3
2007-11LdRC	9/27/2007	177.3	178.9	178.9	179.8	179.4	176.2	188	192.8	181.4	163.7	140	123.1	4
2007-11LdRC	9/28/2007	188.5	187.6	185.7	183.3	180.2	176.7	185.3	186.5	174.3	160.3	141.3	124.8	5
2007-11LdRC	9/29/2007	178.1	176.6	177.7	180.3	182.2	182.7	191.4	192.5	181	167.1	142.2	125	6
2007-11LdRC	9/30/2007	171.6	173.6	174.3	173.1	175.3	177.3	188.2	193.2	179	163.9	138.6	121.9	7
2007-11LdRC	10/1/2007	183.8	184.9	186.2	184.7	182.9	181.3	192.1	196.8	182.5	163.6	140.4	122	1
2007-11LdRC	10/2/2007	179.7	179.3	179.8	178.3	178.3	176.1	186.8	190.5	176.3	160.4	135.4	119.3	2
2007-11LdRC	10/3/2007	181.3	181.2	182.2	180.6	179.1	178.1	187.3	188.9	176.6	161.4	138.3	120.4	3
2007-11LdRC	10/4/2007	180	182.1	179.8	176.6	171.9	172.7	179.3	184.1	178.5	158.4	138.2	122.1	4
2007-11LdRC	10/5/2007	176.9	179.5	184.9	182.6	181.2	173.8	184.3	178.1	168.7	154.3	136.1	121.8	5
2007-11LdRC	10/6/2007	174.5	175.6	172	173.2	172.3	172.8	182.3	182.6	168.9	153.1	134.4	121.3	6
2007-11LdRC	10/7/2007	169.3	169.8	167.8	169.9	170.9	171	185.7	186.6	172.4	155.2	133.8	118.3	7
2007-11LdRC	10/8/2007	183.9	185.9	183.5	180.4	177.2	179.5	194.3	195.6	180.8	159.5	134.3	116.4	1
2007-11LdRC	10/9/2007	178.8	183.5	183.5	181.8	175.6	174.2	192.4	195.7	178.6	157.9	134.8	118.7	2
2007-11LdRC	10/10/2007	179.8	184.6	177.5	183.2	182.4	181.1	195.7	196.9	180.2	161.3	136.1	118.6	3
2007-11LdRC	10/11/2007	182.7	182.9	179.2	180.8	179.4	181.7	191.3	190.2	179.2	165.2	138.8	125.6	4
2007-11LdRC	10/12/2007	182.6	182.3	185.8	186.8	185.1	180.4	191	187.4	171.7	156.7	135.8	118.9	5
2007-11LdRC	10/13/2007	166.2	167.4	169.1	169.9	173.8	176.2	188.3	185.8	168.7	150.8	133.7	119.6	6
2007-11LdRC	10/14/2007	160.5	161.7	162.8	164.6	169.4	173.9	179.8	180.2	174.8	167.3	132.4	116.5	7
2007-11LdRC	10/15/2007	181.8	183.2	185.5	184.9	182.6	184.8	195.6	193	181.8	162.1	134.3	117.7	1
2007-11LdRC	10/16/2007	184.9	188.2	188.8	188.5	185.9	185.2	201.5	196.4	181.4	161.2	135.8	117.7	2
2007-11LdRC	10/17/2007	180.5	179.4	180.5	180.4	180.4	180.1	197.4	194.8	177.2	159.5	133.3	117.1	3
2007-11LdRC	10/18/2007	178	179.8	179.8	180.8	179.2	179.1	196.1	192.7	176.6	158.8	134.4	116.9	4
2007-11LdRC	10/19/2007	178.3	180.5	182.7	184.4	182.4	175.9	188.5	183.2	168.5	153.6	134.9	118.4	5
2007-11LdRC	10/20/2007	163.1	164.8	166.1	167.8	171.3	171	184.5	178.9	165.6	150.2	132.8	118.3	6
2007-11LdRC	10/21/2007	160	166.1	173.7	175.8	177.6	182.4	199.5	194.6	178.2	158.6	136.6	119.3	7
2007-11LdRC	10/22/2007	191.8	193.8	195.1	195.4	191	185.7	205.4	204.9	184.8	162.2	136.8	119.1	1
2007-11LdRC	10/23/2007	182.9	182.3	181.4	180.4	181.7	184.5	200	196.2	178.5	157.8	133.7	116.2	2
2007-11LdRC	10/24/2007	187	183.2	182.3	181.4	182	182.4	205.6	201.2	183.5	162.8	137	118.7	3
2007-11LdRC	10/25/2007	190.4	193.6	196.7	197.6	193.6	183.8	201.3	207	191.9	164.8	138.3	121.4	4
2007-11LdRC	10/26/2007	186.3	189.1	191	190.7	187.7	184.9	197.1	188.5	174.3	159.1	138.3	121.5	5
2007-11LdRC	10/27/2007	169.8	170.6	171.4	171.4	173.7	177	190.5	176.6	167.4	152.3	134.6	117.4	6
2007-11LdRC	10/28/2007	153.1	150.6	150.6	153.8	159.1	169.3	187.4	180.7	165.2	148.2	127.6	112.8	7
2007-11LdRC	10/29/2007	179.7	181.5	181.1	180.2	176.7	179.4	202.1	196.7	178.5	157.4	132.1	114.8	1
2007-11LdRC	10/30/2007	177.7	180.1	182.4	185.7	185.2	183.3	202.5	193.2	178.9	159.2	132.4	114.3	2
2007-11LdRC	10/31/2007	178.3	183	188.2	188	186.3	182.7	201.9	195.1	177.7	157.8	132.4	115.5	3
2007-11LdRC	11/1/2007	174.5	172.7	179.3	180.8	180.3	179.6	197.7	191.3	175.4	157.8	135.5	116.8	4
2007-11LdRC	11/2/2007	177.3	179.5	177.3	179.5	173.7	185.9	180.8	175.4	162.6	151.7	134.7	123.4	5
2007-11LdRC	11/3/2007	158.6	158	164.7	159.3	161.8	178.1	184.7	167.2	154.1	145.7	130.3	119.8	6
2007-11LdRC	11/4/2007	158.5	159.5	159.8	161.3	167.9	182.7	194.4	178.7	160.6	152.9	133.2	122.4	7
2007-11LdRC	11/5/2007	185.1	190.2	188.1	190.4	187.3	183.6	179.3	171.2	161.3	152.9	137.1	124.9	1
2007-11LdRC	11/6/2007	181.3	181.3	181	180.6	179.4	182.4	200	192.5	177.4	158.9	135.5	123.5	2
2007-11LdRC	11/7/2007	177.4	179.1	178.6	180.5	180	180.5	197.3	190.2	176.9	159.5	136.2	117.9	3
2007-11LdRC	11/8/2007	175.1	177.2	177.1	174.9	175	177.6	195.5	187.7	174.8	158.2	136.9	117.6	4
2007-11LdRC	11/9/2007	174.6	176.2	177.5	178.3	176.4	176.4	190.1	181.9	170.4	156.6	138.8	121.3	5
2007-11LdRC	11/10/2007	163.6	162.4	162.2	163.4	165.5	171.5	184.1	175.5	163.2	151.4	135.7	119.7	6
2007-11LdRC	11/11/2007	160.6	160.8	160.2	160.8	161.9	168	184.7	178.6	167	152.1	133.3	115.1	7
2007-11LdRC	11/12/2007	173.8	174.4	174.6	174.9	174.4	176.5	195.5	189.1	175.5	158.4	136.2	118.8	1

SetID	Date	HR13	HR14	HR15	HR16	HR17	HR18	HR19	HR20	HR21	HR22	HR23	HR24	DOW
2007-11LdRC	11/13/2007	177	177.2	175	176	177	182.4	198.6	190.6	176.6	159.7	137.1	117.4	2
2007-11LdRC	11/14/2007	174.4	173.8	174.9	175.5	174.6	177.1	193.5	187.2	172	157.6	136.1	118.3	3
2007-11LdRC	11/15/2007	171.7	172	173	173.4	172.7	175.1	189.8	182	169.4	156.4	134.8	116.8	4
2007-11LdRC	11/16/2007	167.2	165.9	166.4	169.5	172	175	188.5	179.2	169.3	156.1	135.8	118.2	5
2007-11LdRC	11/17/2007	160.1	164.5	161.9	165.3	168.9	173.3	186.2	178.3	167.5	152.9	124	117.7	6
2007-11LdRC	11/18/2007	159.5	161	161.6	162.2	165.3	174.3	187.7	179	166	147.1	127.8	114.2	7
2007-11LdRC	11/19/2007	172.2	173	174.4	174.3	174	183.6	190.1	187.5	178.7	163.6	139.4	115.1	1
2007-11LdRC	11/20/2007	180.1	179	179.1	176.6	175.5	177	194.9	188.7	173.8	157.9	135.4	116.3	2
2007-11LdRC	11/21/2007	170.5	168.6	172.7	174.2	172.1	175.9	193.8	186.5	171.7	158.8	133.3	115.9	3
2007-11LdRC	11/22/2007	176.5	176.3	173.5	174	170.9	168.4	170.7	165.3	156.5	146.3	132.8	116.5	4
2007-11LdRC	11/23/2007	172.2	172.5	174.6	175.9	174.2	186.9	190.4	175.6	160.8	149.5	132.5	121.7	5
2007-11LdRC	11/24/2007	160.1	164.5	161.9	165.3	168.9	173.3	186.2	178.3	167.5	152.9	124	117.7	6
2007-11LdRC	11/25/2007	159.5	161	161.6	162.2	165.3	174.3	187.7	179	166	147.1	127.8	114.2	7
2007-11LdRC	11/26/2007	180.8	178	179.1	178	180.1	184.9	203.2	197.3	183.8	165.8	141.3	122.3	1
2007-11LdRC	11/27/2007	182.4	182.1	183.6	181.5	181.5	188.7	206	198.5	173.9	170.5	144.8	125.3	2
2007-11LdRC	11/28/2007	179.6	178.4	177	170.5	181.3	191.3	199.6	190.7	179	173.7	144.6	124.1	3
2007-11LdRC	11/29/2007	176.5	176.3	173.5	174	170.9	168.4	170.7	165.3	156.5	146.3	132.8	116.5	4
2007-11LdRC	11/30/2007	172.2	172.5	174.6	175.9	174.2	186.9	190.4	175.6	160.8	149.5	132.5	121.7	5
2007-11LdRC	12/1/2007	160.6	160	158.2	164.2	164.4	188.4	188.2	169.7	159.5	145.3	129.1	121.1	6
2007-11LdRC	12/2/2007	149.2	147.4	145.7	147.7	152	179.4	184.8	167.4	148	137	124.7	114.8	7
2007-11LdRC	12/3/2007	166.5	170.2	167.1	165	178	173.5	197.9	187.6	169.9	146.8	127.3	117.2	1
2007-11LdRC	12/4/2007	171.5	173	164.3	168	167.1	174.4	196.5	189.4	167.8	148.5	125.6	111.7	2
2007-11LdRC	12/5/2007	167.1	170.5	173.8	174.4	172.9	179.8	202.1	192.5	171.6	146.9	129.1	114.4	3
2007-11LdRC	12/6/2007	174.8	172.8	175.1	175.6	174.9	180.5	203.3	195.7	176.5	157	132.7	115.9	4
2007-11LdRC	12/7/2007	170.5	173	175.2	177	175.6	179.4	197.1	186.8	170.1	157	136.8	117.3	5
2007-11LdRC	12/8/2007	158.7	161	161.3	162	163.2	170.3	186.6	178.2	165.1	151.9	132.6	117.8	6
2007-11LdRC	12/9/2007	152.5	150.2	150.8	153.3	157.6	172.2	193.5	186.8	160.6	142.9	127.5	110.3	7
2007-11LdRC	12/10/2007	168.4	169.9	169	167.1	165.7	173.2	198.2	188.5	172.1	153.5	132	112.6	1
2007-11LdRC	12/11/2007	165	164.8	164.6	164.2	163.5	167.9	189.3	182.9	166.8	150.3	129	114.2	2
2007-11LdRC	12/12/2007	157.2	160.5	160.5	158.3	159.7	170.9	184.6	183.8	167.8	149.8	130.9	114.6	3
2007-11LdRC	12/13/2007	163.7	167.3	167	167.4	167.1	173	189.9	189.3	172.9	155.1	132.2	116.8	4
2007-11LdRC	12/14/2007	165.9	164.8	166.2	167.4	167.9	172.9	190.4	178.9	164.2	150.6	134.2	117.4	5
2007-11LdRC	12/15/2007	153.5	151.4	152.1	153.3	156.9	163.9	180.8	171.1	162.2	147.6	131.1	115.6	6
2007-11LdRC	12/16/2007	148	147.3	148.3	150.9	154.6	165.1	188.8	183.8	167.7	147.4	127.7	112.4	7
2007-11LdRC	12/17/2007	161	161.5	162.5	162.6	163.4	168.5	194.2	188.4	169.9	150	128.7	115.1	1
2007-11LdRC	12/18/2007	159.8	158.1	151.4	157.6	158.6	162.5	187.9	177.5	167.3	145.7	127.4	112.2	2
2007-11LdRC	12/19/2007	157.1	158.7	161.5	161	160.7	166.9	188.3	182.1	167.6	150.4	129.5	112.8	3
2007-11LdRC	12/20/2007	157.2	157.1	158.5	160	160.6	166.7	189.3	182.2	168.7	153.6	130.7	114	4
2007-11LdRC	12/21/2007	158.7	159.4	159.4	159.4	160.4	165.5	172.5	171.3	163.5	146.2	124	114.5	5
2007-11LdRC	12/22/2007	150.7	147	148	149.5	152.8	159.7	178.9	172.9	159.1	147.2	128.7	115.2	6
2007-11LdRC	12/23/2007	143.1	142.6	145.1	146.3	152	165	189.8	187.4	175.6	159.2	136.1	118.5	7
2007-11LdRC	12/24/2007	164.5	165.3	167.3	166.9	166.1	179.5	189.4	187.1	178	163.6	134.6	114	1
2007-11LdRC	12/25/2007	138.3	137.9	140.1	143.1	146.8	154.8	168.6	164.8	154.1	143.8	128.5	114.6	2
2007-11LdRC	12/26/2007	170.2	170.2	173	174.2	175.1	182.2	206.7	199.4	182.2	165.2	137.8	119.5	3
2007-11LdRC	12/27/2007	170.9	173.2	171.8	170.1	172	181.4	205.5	198.6	181.6	164.6	143.1	117.3	4
2007-11LdRC	12/28/2007	164.3	164.1	163.9	163.3	162.7	171	190.9	185.4	170.9	157.6	136.5	119.4	5
2007-11LdRC	12/29/2007	153.2	153.6	152.9	156.9	163.5	169.3	184.3	169.9	156.1	147.9	133.2	119.3	6
2007-11LdRC	12/30/2007	138.3	137.9	140.1	143.1	146.8	154.8	168.6	164.8	154.1	143.8	128.5	114.6	7
2007-11LdRC	12/31/2007	155.7	154.1	155.1	157.6	162	172.9	201.4	200.7	182.1	161.6	137	119.1	1

tblHrLoad 2007

SetID	Date	HR13	HR14	HR15	HR16	HR17	HR18	HR19	HR20	HR21	HR22	HR23	HR24	DOW
Based on Hour Ending		13	14	15	16	17	18	19	20	21	22	23	24	
Total MW by Hour		62,387	62,592	62,754	63,042	63,277	63,942	66,970	67,942	64,115	58,205	49,877	43,156	
Total Obs by Hour		365	365	365	365	365	365	365	365	365	365	365	365	
Off Peak Hrs MW											58,205	49,877	43,156	
Total Off Peak Obs by Hour											365	365	365	
Mid Peak Hrs MW		62,387	62,592	62,754	63,042	63,277	17,684	18,493	18,720	17,701				
Mid Peak Obs by Hour		365	365	365	365	365	104	104	104	104				
Priority Peak Hrs MW							46,258	48,477	49,223	46,415				
Priority Peak Obs by Hour							261	261	261	261				
Total MW Check		0.00	0.00	0.00	0.00	0.00	0.00	0.00	0.00	0.00	0.00	0.00	0.00	
Total Obs Check		0	0	0	0	0	0	0	0	0	0	0	0	

Total Avg. MW
Off Peak Avg. MW
Mid Peak Avg. MW
Priority Peak Avg. MW

SetID	Date	HR1	HR2	HR3	HR4	HR5	HR6	HR7	HR8	HR9	HR10	HR11	HR12
2007-11LdRC	1/1/2008	127.1	120	111.2	107.2	104.7	109.9	114.3	122.9	140	160.2	173.8	173.7
2007-11LdRC	1/2/2008	101.4	97.2	94.1	93.1	95.7	108.2	127.1	141.3	152.7	161.9	166	165.6
2007-11LdRC	1/3/2008	105.2	97.7	93.8	94.5	98.3	110.6	129.7	142.8	155.7	168.4	171.1	170.7
2007-11LdRC	1/4/2008	104.5	98.5	95.3	94.9	97.7	110.2	131.2	144.6	157.1	167.2	168.6	168.4
2007-11LdRC	1/5/2008	127.1	120	111.2	107.2	104.7	109.9	114.3	122.9	140	160.2	173.8	173.7
2007-11LdRC	1/6/2008	108.8	101.2	97.2	96.3	100.9	106	114.5	127.9	146.4	163.4	171.9	169.5
2007-11LdRC	1/7/2008	101.5	96.5	94	94.9	98.6	109.7	130.2	144.9	158.3	171.1	172.6	170.6
2007-11LdRC	1/8/2008	102.5	96.3	91.9	92.6	96.6	112.1	128.4	141.6	153.7	162.9	165.9	166.4
2007-11LdRC	1/9/2008	101.4	97.2	94.1	93.1	95.7	108.2	127.1	141.3	152.7	161.9	166	165.6
2007-11LdRC	1/10/2008	105.2	97.7	93.8	94.5	98.3	110.6	129.7	142.8	155.7	168.4	171.1	170.7
2007-11LdRC	1/11/2008	104.5	98.5	95.3	94.9	97.7	110.2	131.2	144.6	157.1	167.2	168.6	168.4
2007-11LdRC	1/12/2008	106.6	99.2	95	93.6	97	103.8	112	129.8	147.3	158.1	161.2	159.9
2007-11LdRC	1/13/2008	107.3	100.7	98.7	97.4	99.9	104.2	109.1	120.8	140.1	153	160.3	160.9
2007-11LdRC	1/14/2008	99.6	94.6	92.7	91.7	96.4	101.5	129.9	143.8	155.5	164.8	166.2	164.7
2007-11LdRC	1/15/2008	100.8	95.4	92.8	92.8	97	108.6	129.9	141.9	153.7	162.3	165.8	165.7
2007-11LdRC	1/16/2008	97.7	92.7	90.5	90.6	94.6	106.8	127.8	139.9	148.4	159.4	161.5	160.4
2007-11LdRC	1/17/2008	99.6	94.3	91.4	92.3	95.8	110.5	133.1	146	157.2	166.6	167.3	166.2
2007-11LdRC	1/18/2008	103.7	98.5	96.8	97.7	102	114.9	135.8	151.3	159.6	171.3	172.9	171.5
2007-11LdRC	1/19/2008	109.4	103.9	102.8	101.6	105.3	112.1	119.7	134.7	155.3	167	167.3	167.9
2007-11LdRC	1/20/2008	111.4	104.8	102.7	102.2	103.4	109.1	120.2	133.9	151	163.4	168.4	168.2
2007-11LdRC	1/21/2008	113.9	109	103.9	104.1	107.5	117.3	131.8	151.8	166.9	179.8	182.7	180.2
2007-11LdRC	1/22/2008	110.2	105.4	102.2	101.9	105.4	116.9	140.5	155.3	166.6	176.3	177	175.2
2007-11LdRC	1/23/2008	104	97.4	94.8	94.6	99.9	112.6	135.4	149.5	160.3	173	173.9	174.1
2007-11LdRC	1/24/2008	102.8	100	97.1	95.9	100.8	113.2	137.6	151.4	162.9	173.5	172.9	174
2007-11LdRC	1/25/2008	104.9	100.4	97.4	95.9	101.2	111.8	130.8	148.7	164.4	175.9	179.8	177.6
2007-11LdRC	1/26/2008	104	96.3	93.3	92.8	96.3	101.6	111.7	125.9	143.5	155	156.6	156.6
2007-11LdRC	1/27/2008	101	95.3	92.9	91.9	94.5	101	110.3	122.7	141.1	153.1	158.1	159.1
2007-11LdRC	1/28/2008	104.1	96.5	95.1	95.5	99.3	111	134.5	146.6	160.4	172.2	176.6	176.1
2007-11LdRC	1/29/2008	105.4	99.9	96.2	95.8	99.1	113.5	135.6	146.4	160.4	173.2	178.4	175.2
2007-11LdRC	1/30/2008	103.7	97.8	95.2	93.9	98.3	109.3	133.9	145.5	159.1	170.9	176.1	176
2007-11LdRC	1/31/2008	106.1	99.8	97.2	96.3	101	112.7	135	148.3	161.9	169.3	171.4	165.8
2007-11LdRC	2/1/2008	102.6	98.1	95.1	94.8	96.6	104.5	124.4	137.1	151.4	166.3	170.1	170.5
2007-11LdRC	2/2/2008	101.5	97.4	95.4	94.6	96	100.6	108	120.6	136.8	151.7	155.4	155.9
2007-11LdRC	2/3/2008	100.4	96.4	94.4	93.6	94.6	99.1	130.7	150.3	159	168.1	152.6	156.1
2007-11LdRC	2/4/2008	100.1	96.4	94.2	95.3	97.5	105.7	125.8	138.7	152.3	164.2	168.5	169.6
2007-11LdRC	2/5/2008	102.8	98.5	95.3	94.9	97.6	104.8	125.1	139.5	151.5	158.5	160.4	158.9
2007-11LdRC	2/6/2008	97.3	94.6	92.7	92.1	95.7	104.2	124.6	138.4	149.2	157.6	159.9	158.3
2007-11LdRC	2/7/2008	97.2	93.5	91.5	91.9	95.2	104.1	123.4	136.6	146.8	155.4	157.9	155.4
2007-11LdRC	2/8/2008	96.8	94.2	92.8	92.5	95.1	103.6	124.3	138.9	150.5	160.4	162.5	161.1
2007-11LdRC	2/9/2008	99.7	96.2	93.5	93.6	95.7	100.2	109.7	123.7	143	156.3	158.3	158.5
2007-11LdRC	2/10/2008	101.4	96.9	94.8	93.9	94.2	99.2	105.3	116.7	135.1	147.4	156.4	160.6
2007-11LdRC	2/11/2008	101.3	97.4	95.5	94.6	97.1	106.1	125.8	140.1	156.3	169.5	174.1	176.4
2007-11LdRC	2/12/2008	102.8	98.8	97.2	96	98.4	106.6	124.7	141.6	157.1	165.6	169.5	170.1
2007-11LdRC	2/13/2008	101.3	98.5	96.5	95.6	97.6	106.2	126.5	142.1	151.6	161.7	164.7	168.9
2007-11LdRC	2/14/2008	99	97.6	96.2	95.8	98.4	106.1	125.1	140.4	154.3	166.8	169.7	166.5
2007-11LdRC	2/15/2008	101	97.5	95	94.3	95.9	104.5	123.4	137.2	151.2	160.8	161.8	164.6
2007-11LdRC	2/16/2008	100.4	96.3	93.6	92.8	94.2	98.8	107.1	119.9	132.4	149.7	151.8	149.9
2007-11LdRC	2/17/2008	100.1	95.5	93.1	92	93.7	97.5	104.5	116.9	132.4	142.7	145.2	143.7
2007-11LdRC	2/18/2008	96.3	93.7	92	92.3	94.3	102	120.5	125.9	146.4	155.4	157.3	155
2007-11LdRC	2/19/2008	97	93.7	91.8	91.4	94.3	103	120.7	136.4	149.9	159.9	158.6	155.5
2007-11LdRC	2/20/2008	100.2	94.9	92.6	92.4	94.3	102.5	121.7	135.6	146.5	156.5	158.3	158.9
2007-11LdRC	2/21/2008	98.7	95.7	93.8	92.2	94.8	103.1	124.8	136	149.3	157.6	162	162
2007-11LdRC	2/22/2008	98.9	96.3	94.4	93.5	96.3	103.7	123.2	136.9	149.6	158.9	161.6	160.9
2007-11LdRC	2/23/2008	101.3	97.4	95	93.7	95	98.9	108	122	139.1	150.2	152	149.2
2007-11LdRC	2/24/2008	98.3	94.8	93.1	92.4	94	97.8	104.3	115.7	131.3	141.6	144.3	143.1
2007-11LdRC	2/25/2008	98.5	94.5	92.6	91.8	93.5	99.4	109.5	120.6	136.9	150.9	153.9	151
2007-11LdRC	2/26/2008	98	94.2	92.8	91.7	94.8	102.5	120.1	132.3	145.9	157.1	159.7	158.5
2007-11LdRC	2/27/2008	100.2	96	93.9	93.3	95.9	104.2	122.7	135.9	150.3	162.2	165.9	163.5
2007-11LdRC	2/28/2008	100.3	96.5	94.5	94.2	96.5	106	126.8	137.2	154	161.3	167.9	166.9
2007-11LdRC	2/29/2008	101	96.9	94.5	94	96.1	105.3	124.8	137.5	154.5	165.7	168	167.2
2007-11LdRC	3/1/2008	106.1	100.3	95.6	93.2	96.3	103.4	118.6	132.5	151.5	162.9	167.8	163.7
2007-11LdRC	3/2/2008	106	100.2	95.3	93.5	97.1	103.9	113.9	129.4	146.4	156.5	161.7	162.1
2007-11LdRC	3/3/2008	100.9	98.3	95.3	94.2	97.2	109.9	137.4	148.3	165.3	167.3	169.9	169.2
2007-11LdRC	3/4/2008	102	97.2	94.1	93.6	94.3	108.8	136.2	148.3	156.3	166.5	166.3	167.7
2007-11LdRC	3/5/2008	102.9	96.1	92.8	93	97.1	109.1	133.6	144.8	157.5	167.5	166.9	166.1
2007-11LdRC	3/6/2008	103.6	96.5	95.2	93.5	96.7	111.5	132.4	147.3	159.1	165.6	168.9	169.9
2007-11LdRC	3/7/2008	107.4	99.2	94.1	93.8	96	110.1	133.7	146.7	158.3	167.5	168.8	169.6
2007-11LdRC	3/8/2008	107.3	100.6	97	95.7	98.5	107.2	119.5	135.6	154.6	165.7	167.4	166.4
2007-11LdRC	3/9/2008	108.8	102.4	98.3	95.7	97.1	104.1	112.9	126.8	147	157.9	159.9	159.8
2007-11LdRC	3/10/2008	104.9	99.3	95.8	93.3	98.8	112.2	136.1	150.8	164.8	174.2	175.4	175.5
2007-11LdRC	3/11/2008	111.2	104.5	100.7	98.8	102.8	115.6	140.1	156.7	172	181.2	184.5	184.2
2007-11LdRC	3/12/2008	117.5	111.6	106.1	104.5	106.9	119.3	144.8	159.8	170.9	176.7	177.3	177
2007-11LdRC	3/13/2008	106.1	99.6	95.5	94.6	99.3	111.9	136.5	151.8	160.9	168.1	166.2	164.4
2007-11LdRC	3/14/2008	100.1	93.9	91	90.2	94.7	108.3	133.7	147.4	157.8	163.1	164.9	164.5
2007-11LdRC	3/15/2008	103.2	97.2	95.7	92.9	96	102.9	114.3	131.6	149.3	161	163.2	163.5
2007-11LdRC	3/16/2008	98.5	93.5	87.9	88	91.3	98.5	107.2	130.7	142.8	150.5	151	150.6
2007-11LdRC	3/17/2008	98	89.6	88.5	87.7	92.3	106.8	130.9	143	154	158	163.5	156.5
2007-11LdRC	3/18/2008	96.3	91.2	88.5	88.2	93.5	107.9	132.2	145.8	155.5	161.5	162.1	159.5
2007-11LdRC	3/19/2008	93.4	89.6	86.4	85.7	91.3	104.6	127.7	142.1	149.4	156.8	155.7	154.2

SetID	Date	HR1	HR2	HR3	HR4	HR5	HR6	HR7	HR8	HR9	HR10	HR11	HR12
2007-11LdRC	3/20/2008	96.9	93.1	88.7	89.1	93.1	107.9	130.2	143.6	152.4	160.6	162.8	162.9
2007-11LdRC	3/21/2008	99.7	94.4	90.7	89.4	94.5	106.7	129.7	142.5	155.3	164.4	165.2	163.8
2007-11LdRC	3/22/2008	103.8	98.4	94.2	93.3	94.8	102.7	114.3	131.9	150	160.7	160	159.5
2007-11LdRC	3/23/2008	104.4	97	93.5	93.2	96.5	102.5	114	129.9	147.3	156.6	158.5	157
2007-11LdRC	3/24/2008	102.6	98.2	91.7	93.4	97.1	109.2	127.6	144.2	162	170.5	172.5	171.6
2007-11LdRC	3/25/2008	107.4	101	96.8	94.8	98.4	111.3	128.6	145.4	163.7	174	176.5	175.1
2007-11LdRC	3/26/2008	110.3	104.2	99.7	98.6	102.9	112.8	129.6	145.9	164.9	174.9	178.2	179.4
2007-11LdRC	3/27/2008	116.1	109.8	105.7	103.4	105.5	115.7	131.5	148.1	167.1	181.2	185.1	184.4
2007-11LdRC	3/28/2008	115	106.7	103.6	101.4	98.6	113.5	129	145.6	165.2	177.4	182.1	181.6
2007-11LdRC	3/29/2008	112.7	106.5	103	101.7	103.9	108.9	115.5	134.4	151	163.8	164.4	163.4
2007-11LdRC	3/30/2008	103.8	97.3	94.7	93	95.4	102.8	111.7	128.6	146.9	155.4	157.1	155.3
2007-11LdRC	3/31/2008	103.7	96.3	91.2	92.8	98.3	109.8	130.7	146.7	161.2	169.1	170.8	171.6
2007-11LdRC	4/1/2008	104.4	98.9	95.2	97.1	100.2	109.3	130.4	144.8	160.2	170.9	172.1	169.9
2007-11LdRC	4/2/2008	105.7	100.1	97.5	96.2	100.5	109.4	128.5	146.2	161.9	169.9	170.8	174.1
2007-11LdRC	4/3/2008	103.5	100.1	97.5	96	100.4	109.7	133.1	143.7	160.2	167.6	171.6	169.4
2007-11LdRC	4/4/2008	104	100.1	96.7	96.2	98.9	110.1	126.7	140.6	161.9	168.2	169.6	168.2
2007-11LdRC	4/5/2008	101.2	98.5	96.7	95.6	100.3	107.4	110.7	134.7	150.2	161.1	160.1	158.8
2007-11LdRC	4/6/2008	102	98.5	96.1	95.2	98	102.9	110	129.2	145.8	152.7	153.5	153.5
2007-11LdRC	4/7/2008	100.8	95.6	95.6	94.8	100.3	116.1	126.9	145.9	155.9	164.9	165.6	165
2007-11LdRC	4/8/2008	101.6	98	96	95.6	98.7	114.3	122.6	142.5	151.9	162.3	166.9	167.6
2007-11LdRC	4/9/2008	100.2	97.9	95.9	96.2	101.6	115.8	131.6	147.9	163.6	168.2	167.1	166.7
2007-11LdRC	4/10/2008	102.9	101.2	98.2	97.5	102.5	117.4	125.6	142.6	156.6	161.7	166.7	167.6
2007-11LdRC	4/11/2008	103.3	101.5	98.1	98	103.3	114.9	131.3	152.7	168.4	172.6	175.9	174.3
2007-11LdRC	4/12/2008	108.9	104.8	101.6	100.5	100.6	106.5	123.3	138.7	153.2	161.2	161	161.7
2007-11LdRC	4/13/2008	106.8	100.8	98.7	97.9	99.8	102.9	112.3	133.4	147	151.7	156.6	156.8
2007-11LdRC	4/14/2008	104.4	100.3	100.1	98	102	112.5	136	149.7	167.1	174.2	176.2	177.1
2007-11LdRC	4/15/2008	106.5	102.6	99	99.4	102.1	114.5	127.8	154.9	168	175.2	174.3	174.8
2007-11LdRC	4/16/2008	106.1	102	99.6	98.9	101.6	112.3	130.7	147.2	160.2	169.7	173.3	175
2007-11LdRC	4/17/2008	105.7	102	99.2	97.4	100	110.4	130.1	144	160.2	171.8	176.6	176.8
2007-11LdRC	4/18/2008	108.2	104.2	100.9	99.7	101.9	111	131.4	148	161.3	171.1	174.2	174.2
2007-11LdRC	4/19/2008	110.4	104.3	100.5	98.8	100	104.8	115.8	133.4	149.8	161.8	166.7	166.4
2007-11LdRC	4/20/2008	109.4	103.8	100.6	99	100.1	105.4	112.9	127.9	144.6	154.9	158.8	160.2
2007-11LdRC	4/21/2008	105.8	103.2	99.7	99.3	103.4	120.4	129.1	146.8	159.8	169.1	173.3	175.1
2007-11LdRC	4/22/2008	101.3	100.5	98.4	97.3	104.3	117.7	126.3	141.5	153.1	166.1	171.4	172.4
2007-11LdRC	4/23/2008	102.5	100	98.1	97.5	102.2	109.1	127.8	143.3	157.6	164.8	169.3	170.8
2007-11LdRC	4/24/2008	104.4	100.2	98.6	97.1	99.5	108.9	127.9	141.7	155.6	164.5	168.5	169.9
2007-11LdRC	4/25/2008	106.1	101.9	99.6	97.4	100.2	108.5	127	142.3	156.4	169	167.5	168.6
2007-11LdRC	4/26/2008	106.9	100.5	98.1	97.3	98.7	103.6	112.9	133.3	142.8	153.9	157.6	157.5
2007-11LdRC	4/27/2008	105.3	100.5	97.4	96.2	97.6	102.5	109.9	120.9	134.7	145.1	151.2	152.5
2007-11LdRC	4/28/2008	103.8	99.3	96.8	97.3	100.6	109.7	121.6	141.6	154.4	164.3	167.3	169
2007-11LdRC	4/29/2008	103.4	98.2	96	96.4	99.7	110	126.9	142.3	155.4	165.7	169.4	168.6
2007-11LdRC	4/30/2008	102.9	99.3	97.9	98	100.3	110.2	127.6	143.4	155.2	165.7	170	172.7
2007-11LdRC	5/1/2008	106.9	101.7	99.3	97.4	100.3	108.6	132.1	141.2	155.1	162	161.8	160.7
2007-11LdRC	5/2/2008	104.6	100	97.9	96.7	99.7	108.4	126.4	141.3	156.7	164.2	164.8	167.6
2007-11LdRC	5/3/2008	106.7	101.8	98.1	97.4	99.3	104.2	112.1	127.2	143.5	154.3	156.3	156.6
2007-11LdRC	5/4/2008	105.8	101.2	98.6	97.3	97.9	102.1	108.5	121.8	137.3	147.2	151.1	152.1
2007-11LdRC	5/5/2008	104.4	100	97.7	97	99	108	124.8	141.3	156.5	168	172.3	173.1
2007-11LdRC	5/6/2008	106.7	101.6	99.1	98.7	101.3	110.6	127.8	142.2	157.4	167.4	173.3	176.2
2007-11LdRC	5/7/2008	107.9	103.3	100.8	100.5	103.2	112.6	128.8	143.1	160.2	171.3	176.2	179.3
2007-11LdRC	5/8/2008	108.4	104.1	101.9	101.4	103.8	112.8	128.8	144.2	161.4	172.8	176.1	177.4
2007-11LdRC	5/9/2008	110.7	105.3	102.8	102.2	104.2	113.5	129.1	146.8	163.3	171.9	178	180.2
2007-11LdRC	5/10/2008	111.2	106.2	103.1	102.5	103.3	108.5	116.8	133	150.4	160.8	165.2	164.1
2007-11LdRC	5/11/2008	109.5	103.7	101	99.8	102.4	106.1	111.6	126	141.2	151.4	155.4	156
2007-11LdRC	5/12/2008	108.3	104.8	101.8	101.6	103.2	112.9	129.1	145.1	161.1	173.1	179.4	181.2
2007-11LdRC	5/13/2008	106.8	102	98.8	99.4	102.2	112.1	129.7	144.2	161	170.3	173.6	176.1
2007-11LdRC	5/14/2008	105.8	102.1	99.9	98.9	100.7	110.4	118.7	143.6	159	168.6	174.1	178.7
2007-11LdRC	5/15/2008	109	104.7	101.4	101	102.6	112	129.4	147	163.1	170.4	173.6	176.9
2007-11LdRC	5/16/2008	108.3	105.1	102.6	102.4	105.1	113.7	130.2	144.2	159.7	170.1	173.6	176.5
2007-11LdRC	5/17/2008	114.2	104.8	97.1	101.8	105.7	111.2	117.3	131.9	147	157.5	162.1	162.9
2007-11LdRC	5/18/2008	106.8	105	102.3	101.7	103.5	109.4	113.3	126.5	139.9	150	156.1	158.9
2007-11LdRC	5/19/2008	107.1	104.8	101.8	102.1	108	118.9	131.1	145.9	161.4	172.7	178.4	180.3
2007-11LdRC	5/20/2008	108.8	103.9	102	101.4	104.2	113	130.4	146	162.1	171.7	175.5	178.9
2007-11LdRC	5/21/2008	110.3	105.1	103.1	102.2	104.8	114	132.4	147.6	161	171.9	178.1	180.2
2007-11LdRC	5/22/2008	110.9	107.2	104.5	104	105.6	113.7	131.6	148.1	162.8	169.8	173.4	173.3
2007-11LdRC	5/23/2008	106.4	103.1	101.1	99.5	101.8	112.2	131.2	147.1	161.2	169.8	175.5	173.4
2007-11LdRC	5/24/2008	109.9	105.6	103.1	101.8	102.6	108.7	115.6	134.7	146.3	153.8	161.4	165.7
2007-11LdRC	5/25/2008	110.8	105.9	102.7	101.1	102.8	106.4	113.5	126	137.8	148.9	155.4	160.3
2007-11LdRC	5/26/2008	109.8	104.7	102	101	102.5	106.1	114.2	126.5	139.5	150.4	157.4	161.2
2007-11LdRC	5/27/2008	110.4	105.9	103.6	104.3	104.9	115.1	131.9	151.1	168.1	177.9	181.6	182.3
2007-11LdRC	5/28/2008	109.1	105.3	101.8	102.1	103.8	113.6	131.1	147.9	165.3	176	180.1	182.4
2007-11LdRC	5/29/2008	109.1	104.4	102.7	101.6	103.5	113.1	131.1	149.3	166	176.4	181	181.4
2007-11LdRC	5/30/2008	106.4	103.1	101.1	99.5	101.8	112.2	131.2	147.1	161.2	169.8	175.5	173.4
2007-11LdRC	5/31/2008	113.5	106.3	103.5	101.6	103	109.4	117.9	131.7	145.2	153.9	161.1	165.4
2007-11LdRC	6/1/2008	116.3	110.4	105.4	102.1	103.6	107.2	115.9	129.4	143.5	153.9	161	163.5
2007-11LdRC	6/2/2008	113.1	106.4	102.6	101.1	103.3	108.2	118.7	132.8	146.2	156.4	162.6	165.9
2007-11LdRC	6/3/2008	113.5	109.8	105.4	102.5	105.8	116.3	137.2	150.6	170.7	180.3	184.3	186.9
2007-11LdRC	6/4/2008	117.7	111	107.4	106.4	107.7	119.2	137.7	156.2	170.5	180.5	182.9	185.4
2007-11LdRC	6/5/2008	117	110.8	107.2	104.9	107.8	118.8	136.4	154.8	170.1	179.5	182.3	186.1
2007-11LdRC	6/6/2008	117	110.5	107.4	106.3	109.3	121.4	139.4	157.3	174.3	181.2	185.3	186.7

SetID	Date	HR1	HR2	HR3	HR4	HR5	HR6	HR7	HR8	HR9	HR10	HR11	HR12
2007-11LdRC	6/7/2008	122.1	113.6	108.9	107.5	108	112.8	123	141.8	161.4	171.6	177	176.7
2007-11LdRC	6/8/2008	118.2	112.2	107.3	105.3	105.8	111.9	120.1	135.6	151.3	163.1	167.8	169.6
2007-11LdRC	6/9/2008	115.6	109.3	106.3	104.3	107.1	118.4	136.1	154.5	169.3	181.1	183.1	183.9
2007-11LdRC	6/10/2008	115.7	108.8	105	105.1	107.9	117.9	135.2	156.3	171.9	180.9	182.3	183.2
2007-11LdRC	6/11/2008	115	108	106	103.3	106	114.4	130.5	151	166.8	179.3	182.9	184.5
2007-11LdRC	6/12/2008	116	110.5	105.7	104.6	103.9	115.3	132.6	152.5	168.8	180.4	183.1	184.4
2007-11LdRC	6/13/2008	116.9	110.2	105.8	104.9	106.5	115.2	127.2	147.1	163.2	173.2	176.8	179.8
2007-11LdRC	6/14/2008	118.3	110.5	106.7	104.8	106	113	120.6	137.9	155.3	168.1	170.9	171
2007-11LdRC	6/15/2008	114.8	108.1	104	102.9	104.5	110.4	118.3	135.5	149.5	158.7	164	165.3
2007-11LdRC	6/16/2008	114.9	109.3	104.9	102	105.1	116.1	131.6	152.3	169.6	181.6	185.8	188.7
2007-11LdRC	6/17/2008	118.3	111.5	106.9	105.1	108	120.5	132.8	153.5	168.9	178.8	181.3	185.8
2007-11LdRC	6/18/2008	117.3	110.8	107.7	106.3	108.8	118.3	133.8	152.6	168	178.7	182	183.6
2007-11LdRC	6/19/2008	118.8	111.8	106.7	104.6	107	117.2	131.5	150.7	165.7	177.8	182.4	184.4
2007-11LdRC	6/20/2008	119.2	112.4	108.6	106.9	109	119.8	134.9	154.3	171.1	180.5	183	185.7
2007-11LdRC	6/21/2008	118.9	111.8	107.9	105.7	106.9	115.3	122.2	139.7	156.4	166.8	171.6	173.4
2007-11LdRC	6/22/2008	118.3	111.2	106.5	105.2	105.2	112.2	123	137.6	154.3	162.5	168.2	170.3
2007-11LdRC	6/23/2008	116.1	108	106	104	108.5	118.8	128	142.4	167.3	181.3	185.9	186.9
2007-11LdRC	6/24/2008	115.6	109.1	105.5	103.9	105.8	116.2	139.2	161.1	171	177.8	180.7	181
2007-11LdRC	6/25/2008	113.7	108.1	104.6	102	106	115.7	132.1	153.9	170.7	179.8	183.8	183.7
2007-11LdRC	6/26/2008	116.1	109.7	105.8	104.2	107.3	118.2	135	153	167.9	180.4	184	184.6
2007-11LdRC	6/27/2008	115.6	110.6	105.4	105	107.4	117.7	133.1	152.7	165.5	179.3	182.4	184
2007-11LdRC	6/28/2008	119.1	112.4	107.3	105.3	105.9	113	123.7	141.4	158.4	169.1	173.5	174.2
2007-11LdRC	6/29/2008	118.5	111	105.9	104.2	105.5	111.7	121	134.9	151.3	162.5	167	167.6
2007-11LdRC	6/30/2008	115.2	110.2	105.9	104.8	108.4	116.6	135	152.6	169.5	179.1	183.4	186
2007-11LdRC	7/1/2008	113.7	110.1	108	107.1	108.7	114.3	125.7	144.6	164.8	177.2	181.6	183.5
2007-11LdRC	7/2/2008	114.9	110.3	108.4	108	109.4	115.6	128	145.2	166.4	179.8	186.3	189.1
2007-11LdRC	7/3/2008	115.6	111.2	109.7	108.5	109.8	116.1	129.2	146.8	168.7	184.2	187	189.1
2007-11LdRC	7/4/2008	115.4	110.7	108.3	107.1	107.6	110.1	114.1	128.3	150.4	162.6	171.5	169.5
2007-11LdRC	7/5/2008	116.7	111.8	109.6	108.1	108.3	112.4	117.6	130.1	148.6	160	164.4	166.7
2007-11LdRC	7/6/2008	115.2	111.8	109	107.1	108	110.9	116	127	143.2	155.5	161.2	161.7
2007-11LdRC	7/7/2008	115.4	110.7	108.3	107.1	107.6	110.1	114.1	128.3	150.4	162.6	171.5	169.5
2007-11LdRC	7/8/2008	115.7	112	110.9	109.9	110.5	115.8	126.6	147.1	167.4	184.8	189.3	192.3
2007-11LdRC	7/9/2008	117.4	112.8	110.4	109.1	110.3	116.8	128.9	147.8	169.1	184.2	186.3	189.6
2007-11LdRC	7/10/2008	117.6	112.6	110.6	110	111.9	117.9	128.3	147.4	166.1	179.9	186.2	188.4
2007-11LdRC	7/11/2008	116.6	112.5	110.7	109.6	111.1	116.3	127.1	143.9	163.9	179.4	186	186.2
2007-11LdRC	7/12/2008	118.3	113.6	111.1	110.6	111.2	114.2	118.6	134.9	153.8	168.1	174.6	175.8
2007-11LdRC	7/13/2008	116.7	112.2	109.9	108.8	109.2	111.6	115.6	129.1	145.8	157.8	165	167.2
2007-11LdRC	7/14/2008	115.2	110.9	108.9	108.3	109.8	115.5	126.2	145.5	164.6	179.1	186.5	189.4
2007-11LdRC	7/15/2008	116.5	112.4	110.1	109.8	110.8	116.6	126.7	146.1	165.8	180.5	188.2	188.8
2007-11LdRC	7/16/2008	116.7	112.6	110.9	110	110.9	116.7	126.8	144.8	164.6	179.1	185.1	187.6
2007-11LdRC	7/17/2008	116.1	112.3	110	109.4	110.9	116.7	119.6	144.9	164.9	179.4	186	189.7
2007-11LdRC	7/18/2008	117.6	113.4	111.1	110.5	111.8	118.3	127.7	144.9	163.1	177	183.1	186.2
2007-11LdRC	7/19/2008	117	112.8	110.5	109	110.1	113.2	118.4	134	154.5	168.7	175.8	177.4
2007-11LdRC	7/20/2008	116.8	112.2	110.2	109	109.7	112.6	116	128.7	147.2	161.5	166.6	167.9
2007-11LdRC	7/21/2008	116.2	111.5	110.1	109.3	110.9	111.4	126.9	145.8	167.9	184.4	189.3	191.1
2007-11LdRC	7/22/2008	118.3	113.3	110.8	109.9	111.6	117.5	127.2	145.7	166.6	183.2	190.6	192.3
2007-11LdRC	7/23/2008	116.8	112.4	109.9	109.3	111.1	117	126.8	144.3	163.1	175.2	179.2	184.7
2007-11LdRC	7/24/2008	115.8	111.6	109.7	108.5	110.2	116	126.9	142.7	160.6	174.6	179.1	180.4
2007-11LdRC	7/25/2008	115.6	111.1	109.2	107.7	110	115.2	127.5	144.5	163	179.8	186.5	189.7
2007-11LdRC	7/26/2008	117.6	112.2	110	108.3	109.5	112.2	119.6	132.4	152.4	167	174.1	174.3
2007-11LdRC	7/27/2008	118.6	113.4	110.7	109	109.5	112.8	117.6	129.9	147.4	160.7	167.9	169.1
2007-11LdRC	7/28/2008	119.5	113.2	111.1	110	111.4	117	129.3	150.5	171.6	186.9	197.3	200.3
2007-11LdRC	7/29/2008	120.4	115.3	112.5	112	113.3	120.4	132.7	150	171.6	187.3	193.1	194.8
2007-11LdRC	7/30/2008	117.9	113.2	111.2	110	111.4	116.6	128.5	147.1	167.4	182.2	188.8	191.4
2007-11LdRC	7/31/2008	117.6	113.1	111.1	109.8	111.4	117.5	128.6	143.6	166.8	183.7	189.6	191.1
2007-11LdRC	8/1/2008	121.7	117.2	114.2	112.8	115.2	122.9	135.4	154.8	171.1	185.5	189.2	190.6
2007-11LdRC	8/2/2008	121.7	115.7	112.1	110.1	111	116.2	122.7	140.1	157.2	171.8	178.2	179.9
2007-11LdRC	8/3/2008	120.2	115.9	111.7	110.6	110.8	114.9	119.4	134.4	152.8	165.1	172.3	173.1
2007-11LdRC	8/4/2008	119.6	114	111.9	109.9	112.8	119.6	132.7	151.7	172.5	187.1	191.8	191.5
2007-11LdRC	8/5/2008	120.5	115.5	112.3	111.8	113.5	120.5	133.4	152.7	173.9	187.3	192.2	194.5
2007-11LdRC	8/6/2008	120.6	115.3	111.7	111	113.4	121.8	135	151.9	169.8	184.1	190.7	193.3
2007-11LdRC	8/7/2008	118.8	113.4	110.6	109.9	111.1	120	132.4	149.7	168.9	182.1	188.6	189.2
2007-11LdRC	8/8/2008	117.7	112.6	109.6	108.4	110.7	119.5	131.5	150.7	168.8	182	185.9	186.8
2007-11LdRC	8/9/2008	122	115.4	112.1	109.6	110.7	115.6	121.9	136.7	155.9	171.1	176.8	179.3
2007-11LdRC	8/10/2008	121.3	115.9	112.4	111.1	111.8	115.9	121	135.1	153.9	166.9	173.3	176.7
2007-11LdRC	8/11/2008	122.2	116.1	113	111.7	113.6	121.9	135.7	158.1	177	192.1	198.1	201.9
2007-11LdRC	8/12/2008	121.8	116	112.7	112.3	114.4	122.3	136.6	157.3	178.5	193.4	200.3	202.5
2007-11LdRC	8/13/2008	122.7	116.5	112.3	111.3	112.9	120.6	133.7	153.5	173.6	188.5	195.1	199.1
2007-11LdRC	8/14/2008	124.1	118.4	115.1	113.4	114.6	123.6	136.3	157.3	177.8	190.8	194.5	193.3
2007-11LdRC	8/15/2008	121.1	115.1	111.9	110.5	110.9	117	128.7	152.7	169.8	183.8	190.9	194.2
2007-11LdRC	8/16/2008	121.6	115.2	111.7	109.3	109.6	115.6	120.7	135	155.7	171.8	176.9	178
2007-11LdRC	8/17/2008	119.8	113.8	111.2	108.6	109.3	112.9	118	141.4	149.9	163.7	167.6	165.7
2007-11LdRC	8/18/2008	118.6	113.3	109.4	109.9	113.1	119.6	133.9	153	171.1	189	194.5	197.4
2007-11LdRC	8/19/2008	122.1	115	114.2	111.1	113.8	121.2	132.8	153.1	172.7	188.3	193.9	196.4
2007-11LdRC	8/20/2008	118.9	112.7	110.7	108.2	110.9	118.8	132	150.3	168.8	183.6	189.5	192.6
2007-11LdRC	8/21/2008	119.9	115	110.9	109.9	112.3	112.7	133.3	151.6	173.7	187.4	193	196
2007-11LdRC	8/22/2008	120.7	114.3	111	109.8	112.4	119.1	130.7	146.9	165.9	177	185.1	187.6
2007-11LdRC	8/23/2008	125.1	117.8	114	111.7	112.1	117.1	123.2	139.4	160.6	175.2	179.7	179.6
2007-11LdRC	8/24/2008	119	112.9	109	106.9	107.4	110.8	115.6	127.8	147.3	159.8	165.3	166.3

SetID	Date	HR1	HR2	HR3	HR4	HR5	HR6	HR7	HR8	HR9	HR10	HR11	HR12
2007-11LdRC	8/25/2008	116.7	110.9	107.8	106.5	108.7	115.8	128.2	147.1	167.5	183.5	191.2	192.9
2007-11LdRC	8/26/2008	118	112.4	109.5	108.7	110.8	118.6	131.1	150.1	166.6	179.9	185.6	187.3
2007-11LdRC	8/27/2008	116.1	111.8	109.3	108.2	110.8	119.6	130.5	150.6	169.6	180.8	185.6	187.1
2007-11LdRC	8/28/2008	118.3	113.8	111.1	109.9	112.6	121.7	137.9	152.7	169	182.4	188.8	193.3
2007-11LdRC	8/29/2008	119.1	114	111.7	109.7	111.7	121.7	139.4	155	173.6	187	190.3	191.8
2007-11LdRC	8/30/2008	122.3	116.4	112.6	111	111.4	114.9	122.4	138.2	159.4	173	179.7	181.4
2007-11LdRC	8/31/2008	119	113.5	109.4	107	108	112.4	117.5	130.5	149.4	160.8	169	170.3
2007-11LdRC	9/1/2008	118.6	113.4	110.6	109.4	110.3	114.9	120.9	134.4	153.5	168.8	175.4	177.9
2007-11LdRC	9/2/2008	116.9	110.9	108	107.1	109.2	115.8	133.1	149.4	169.2	180.7	188.5	193
2007-11LdRC	9/3/2008	116.7	111.4	108	107.4	109	117.3	133.8	149.2	167.3	181.7	186.6	190.1
2007-11LdRC	9/4/2008	117.2	112.9	110	109.4	110.1	119.3	136.1	151.1	168.6	181.3	187.7	190.3
2007-11LdRC	9/5/2008	115.1	110.6	108.7	107	108.7	117.4	134.1	149.6	168.7	182.9	186.5	188.1
2007-11LdRC	9/6/2008	118.7	112.5	109.9	109	109.7	115.1	120.8	135.3	152.8	167	175.8	179.2
2007-11LdRC	9/7/2008	117.8	113.4	109.8	108.4	109.8	112.8	117.4	131	148.1	160.2	163.6	167.2
2007-11LdRC	9/8/2008	118.6	113.4	110.6	109.4	110.3	114.9	120.9	134.4	153.5	168.8	175.4	177.9
2007-11LdRC	9/9/2008	116.8	112.5	110.6	109.3	111.3	119.3	134.4	151.1	169.5	181.9	187	187.3
2007-11LdRC	9/10/2008	114.4	110.3	108.3	107.8	109.1	117.4	132.7	149.3	165.4	177.8	182.8	185.2
2007-11LdRC	9/11/2008	114.9	110.9	108.4	107.3	109.7	117.9	133.9	148.1	165.6	177.9	181.5	187
2007-11LdRC	9/12/2008	115.1	111.6	108.9	107.8	109.7	119.1	134.5	149.7	163.8	177.2	182.5	185.8
2007-11LdRC	9/13/2008	119.1	113.5	110.9	109.8	111.1	115.3	121	136.9	155.3	169.1	179.7	180.1
2007-11LdRC	9/14/2008	118.2	113.1	109.8	108.1	112	113	117.5	129.5	147	159.7	165.1	167.8
2007-11LdRC	9/15/2008	115	110.6	108.9	108.5	110.6	118.3	134.5	151.8	169.6	181.1	185.8	191.6
2007-11LdRC	9/16/2008	115.1	110.5	108.2	107.3	110	118.4	135.9	149.9	166.5	179.1	185.2	188.9
2007-11LdRC	9/17/2008	119.1	111.6	109.8	109	111.5	119.5	139	150.2	167.1	176.6	184.2	186.6
2007-11LdRC	9/18/2008	115.8	110.4	109.6	107.9	111.7	118.6	135.2	150.8	169	180.4	184.3	184.8
2007-11LdRC	9/19/2008	115.2	110.9	109.3	108.5	109.6	119.1	135.6	152.5	170.6	181.7	186.1	185.2
2007-11LdRC	9/20/2008	116.4	111.5	109.2	107.3	108.7	113.4	121	135	152.2	163.9	166.4	168.8
2007-11LdRC	9/21/2008	112.9	108.6	106.6	105.3	106.5	110.3	115.1	126.5	141.7	152.9	160.2	162.5
2007-11LdRC	9/22/2008	109.1	106.1	104.9	103.7	103.9	112.6	128	142.6	160.4	173.4	177.9	179.6
2007-11LdRC	9/23/2008	112.2	108.1	106.3	105.3	107.5	115.2	130.3	144.5	161.5	173.8	181.1	182.5
2007-11LdRC	9/24/2008	112.4	108.1	106.5	105.7	108.1	116.3	123	146.5	162.9	176.3	178.9	180.9
2007-11LdRC	9/25/2008	113.6	109.9	107.4	105.8	107.7	116.9	134.3	145.7	163	173.9	180	182.4
2007-11LdRC	9/26/2008	115.8	111.2	109.4	108.6	110.6	119.8	135.2	151.2	168.3	184	188.4	189.4
2007-11LdRC	9/27/2008	116.5	110.6	109.1	107.7	108.6	113.1	119.4	135.6	156.8	169.5	175	175.8
2007-11LdRC	9/28/2008	118.1	112.9	110.2	107.9	108	113	118	132.3	149.2	163.9	170.5	174.3
2007-11LdRC	9/29/2008	116.4	112.6	109.4	108.2	110.3	117.5	134.6	152.7	167.6	176.6	185.2	182.9
2007-11LdRC	9/30/2008	112.7	108.1	106.7	105.7	108.4	115.9	129.9	143.6	161.5	172.2	177.5	178
2007-11LdRC	10/1/2008	113.9	109.7	107.8	107.4	110	117.6	133.5	148.3	161.5	172.4	179.7	186.9
2007-11LdRC	10/2/2008	113	110.2	107.8	110.1	108.7	117.9	133.1	149	166.9	179.5	184	187.2
2007-11LdRC	10/3/2008	114.4	111	108.4	108.1	108.6	117.4	131.8	150	168	180.1	184.4	183.4
2007-11LdRC	10/4/2008	114.9	110.8	108.7	107.5	108.9	113.5	118.8	134.7	155.9	172.3	177.8	179
2007-11LdRC	10/5/2008	115.8	111	108	106.7	107.1	112.4	116.6	129.2	147.3	159.7	169.5	169.5
2007-11LdRC	10/6/2008	114.4	110.4	108.6	107.7	109.5	116.6	132.2	147.4	164.5	178.8	184.4	188.2
2007-11LdRC	10/7/2008	112.6	109.2	107.4	107.3	109.5	116.4	128.3	144.8	164.1	173.1	178.4	180.7
2007-11LdRC	10/8/2008	113.2	108.7	107.1	106.7	109.2	116.6	131.6	147.3	164	175.2	178.1	183.1
2007-11LdRC	10/9/2008	113.8	109.5	107.7	107.2	109.6	116.3	133	148	167.1	177.5	182.1	185.1
2007-11LdRC	10/10/2008	119	113.8	109.9	108.3	110.6	116.5	133.7	157	174.1	184.2	188.1	184.2
2007-11LdRC	10/11/2008	113.8	110.1	107.4	106.7	107.5	112.5	117.5	142.1	154.8	167.1	168.7	169.2
2007-11LdRC	10/12/2008	112.8	109.2	106.3	105.3	107.4	109.7	115	135.8	147.4	165.2	162.5	163.2
2007-11LdRC	10/13/2008	112.2	109.2	107.6	106.5	108.7	114.2	133.7	154.7	168.8	178.7	182.9	187
2007-11LdRC	10/14/2008	114.3	108.9	107.5	108.4	109.4	114.7	136.5	160.7	173.7	182.2	183.4	184
2007-11LdRC	10/15/2008	112.6	109.1	108.4	106.6	108.1	116.5	134.4	148.9	164.3	175.3	181.5	184.2
2007-11LdRC	10/16/2008	110.4	108.7	106.6	106.2	108.6	114.5	124.6	146.1	163.5	175.7	181.8	183.8
2007-11LdRC	10/17/2008	112.6	108.6	106.7	106.6	107.6	115.2	131.6	146.2	162.7	177.4	181.5	181.7
2007-11LdRC	10/18/2008	112.9	108.3	105.5	104.3	105.3	108.7	114.6	128.1	145.2	159	162.7	165

SetID	Date	HR1	HR2	HR3	HR4	HR5	HR6	HR7	HR8	HR9	HR10	HR11	HR12
2007-11LdRC	10/19/2008	112.6	108.6	106.3	105.4	106.7	109.9	115.6	128.3	145.2	153.9	163.4	169.5
2007-11LdRC	10/20/2008	114.7	110.3	108.3	107.2	109.9	118.8	137.2	154	172.4	186.3	189.4	193.5
2007-11LdRC	10/21/2008	113.2	108.9	107	106.5	108.1	116.5	132.3	147.8	165.6	178.2	184	184.8
2007-11LdRC	10/22/2008	112.6	109	107.4	107.1	109.7	118.7	136.2	151.3	169.6	179.8	186.7	191.5
2007-11LdRC	10/23/2008	113	109.8	107.6	106.7	108	116.3	134.5	149.1	169.8	184	188.5	192.9
2007-11LdRC	10/24/2008	116.5	112.2	108	107.1	109.5	118.1	135.9	150.9	168.8	182.4	184.7	188.8
2007-11LdRC	10/25/2008	116	110.9	108.9	107.7	108.9	113.7	122.2	136.6	153.3	166.6	171.4	174.1
2007-11LdRC	10/26/2008	112.7	109.3	106.9	105.9	106.7	110.7	118.2	129.8	144.1	154.9	159.1	159.5
2007-11LdRC	10/27/2008	109.1	105	103.8	103.7	106.1	114.2	133.3	149	164.8	175.9	179.5	182.7
2007-11LdRC	10/28/2008	110.7	107.5	105.8	105.5	107.5	115.4	133.3	147.6	165.4	175.2	179.5	178.5
2007-11LdRC	10/29/2008	110.6	107.7	106	104.8	107.4	116.2	133.6	148.5	163.9	176.2	181.9	182.7
2007-11LdRC	10/30/2008	110.6	107.2	105.2	104.7	106.7	114.7	128.9	144.5	162	172.9	175.6	178.5
2007-11LdRC	10/31/2008	112.4	108.4	106.7	106.5	108.3	115.5	133.1	149.1	164.4	174.8	178	179.8
2007-11LdRC	11/1/2008	118.7	112.3	108.4	106	106.7	109.9	117.5	133.1	148.3	160.4	163.5	162.1
2007-11LdRC	11/2/2008	115.2	109.6	104.9	103.3	103.2	107.2	111.7	127.2	139.2	150.5	159.2	160.8
2007-11LdRC	11/3/2008	116.3	109	106.8	104.9	107.3	115	128.6	149.7	160.2	176.8	182.6	185.2
2007-11LdRC	11/4/2008	120.1	114.6	110.7	109.4	111.7	118.3	134.6	151.2	167.2	178.2	183.7	186.5
2007-11LdRC	11/5/2008	117	111.1	107.5	106.4	108.7	117.6	134.6	147.2	163.5	174.3	180.1	182.4
2007-11LdRC	11/6/2008	111.3	106.2	104.2	103.7	106.3	114.8	132.9	146.2	162.1	173.3	177.4	178.7
2007-11LdRC	11/7/2008	111	106.2	103.4	103.3	105.7	115.3	134.6	146.9	164	175.6	178.1	178.2
2007-11LdRC	11/8/2008	113.8	108	104.9	103.1	105.1	110.8	118.5	131.3	150.3	163.3	167.1	167.5
2007-11LdRC	11/9/2008	112.5	106.5	103.5	102.4	103.3	108	114.5	128.8	145.6	156.2	160.6	164
2007-11LdRC	11/10/2008	108.4	104.7	102.4	101.6	104.8	114.2	130.7	148	162.1	172.8	177.4	178.8
2007-11LdRC	11/11/2008	110.8	106.3	104.6	103.8	106.5	116.9	134.3	149.7	164.6	177	180.8	183.4
2007-11LdRC	11/12/2008	111.1	107.3	104.5	105	106.2	116.3	134.9	151.1	165.8	175.9	178.7	180.2
2007-11LdRC	11/13/2008	111.2	107.3	104.9	104.7	105.8	115.8	126.9	144.8	157.5	168.5	175.3	175.9
2007-11LdRC	11/14/2008	109.3	105.1	101.8	101.5	103.3	110.5	120.1	136.2	154.3	165.8	171.2	171.5
2007-11LdRC	11/15/2008	110.1	105.2	102.6	101.5	102.8	107.3	114.5	128.8	148.1	159	161.8	163.8
2007-11LdRC	11/16/2008	110	105.2	102.8	102	102.7	107.2	114.2	125.8	142.1	152.3	159.3	161.1
2007-11LdRC	11/17/2008	108.9	104.2	101	100.5	102.7	112.3	126	141.8	155	162.2	167.8	172.5
2007-11LdRC	11/18/2008	111.1	107.2	104.9	103.8	106.8	116.3	138.4	150.6	167.2	178.3	183.7	185.3
2007-11LdRC	11/19/2008	108.8	105.5	103.5	102.8	105	114.6	132.5	146.5	161.4	174.1	173.3	178.2
2007-11LdRC	11/20/2008	109.1	105.2	101.6	100.9	104.9	114.2	131.9	144.5	160.2	168.3	173.4	175.6
2007-11LdRC	11/21/2008	109	104.4	102.8	100.7	103.6	113.7	130.7	144.9	160.5	167.7	171.9	171.4
2007-11LdRC	11/22/2008	110.7	105.2	102.6	101.6	102.5	107.8	119.9	136.5	156.7	167.2	166.6	168.2
2007-11LdRC	11/23/2008	117.1	110.9	105.9	103.5	106.9	109.2	114.3	126	144.8	152.2	157.7	159.7
2007-11LdRC	11/24/2008	108.9	104.2	101	100.5	102.7	112.3	126	141.8	155	162.2	167.8	172.5
2007-11LdRC	11/25/2008	111.1	107.2	104.9	103.8	106.8	116.3	138.4	150.6	167.2	178.3	183.7	185.3
2007-11LdRC	11/26/2008	115.9	110.4	107.3	107.4	110.7	119.9	140.2	156.8	172.3	180.6	186.9	185.7
2007-11LdRC	11/27/2008	115.4	108.7	104.4	104.2	106.8	112.9	122.8	138.4	158.3	176.5	182	183.4
2007-11LdRC	11/28/2008	109.7	105	103.5	103.3	105.9	109.8	122	134.8	154.4	169.3	175.1	177
2007-11LdRC	11/29/2008	114.4	109	104.9	103	105.1	108.9	117.8	130.9	150.4	164.6	171.2	172.3
2007-11LdRC	11/30/2008	117.5	110.7	107.5	105.1	107.9	112.6	117.6	128.2	143	150.5	158.3	159.5
2007-11LdRC	12/1/2008	109	102.6	100.9	98.6	102.4	111.1	128.2	143.6	156.5	170.5	171.9	174.5
2007-11LdRC	12/2/2008	109.5	105	101.5	100.3	102.4	113.1	129.5	144.7	160.5	171.6	175	176.8
2007-11LdRC	12/3/2008	105.5	102.8	100.1	99	101.5	117.2	128	136.6	152.5	163.6	169.3	172.5
2007-11LdRC	12/4/2008	107.2	103.1	100	99.2	101.7	111.1	130.7	138.9	151.4	166.8	173	175.3
2007-11LdRC	12/5/2008	107.7	102.8	100.7	100.5	103.4	112.3	130.9	138.6	153.2	165.2	170.9	174.1
2007-11LdRC	12/6/2008	109.5	104.6	101.4	101	102.5	106.4	115	124.7	137.3	155.3	159	163.6
2007-11LdRC	12/7/2008	110	105.2	102.9	100.3	101.6	105.4	112.2	123.9	139	152.3	156.2	157.5
2007-11LdRC	12/8/2008	104.6	100.7	99.9	101.1	104.8	119.7	136.6	150.9	164.2	170.2	172.5	172.4
2007-11LdRC	12/9/2008	107.8	102.3	100.9	99.7	102.7	112.7	130.1	141.6	154.2	162.9	167.7	168.9
2007-11LdRC	12/10/2008	105.1	101.1	97.8	97.9	101	109.1	120.6	136.1	146.8	152.7	156.9	158.7
2007-11LdRC	12/11/2008	106.6	101.9	98.8	98.1	101.3	111.3	125.1	135.6	154.5	162.5	165.1	165.7
2007-11LdRC	12/12/2008	106.4	102.4	99.8	100.4	103.4	111.8	132	144.2	146.4	155.8	166.9	168.1
2007-11LdRC	12/13/2008	108.1	103.2	101.3	99.8	101.8	107.5	115	127	143.7	155.2	157.5	158.2
2007-11LdRC	12/14/2008	106.9	102.2	99.8	98.1	99.4	103.8	110.4	121.2	137.7	149.7	153.4	152.6
2007-11LdRC	12/15/2008	105.4	101	98.8	98.6	101.1	110.7	129.1	141.1	154.7	165.7	166.6	164.2
2007-11LdRC	12/16/2008	106.3	102	99.4	99.1	102.2	110.9	127.7	139.3	150.5	158.7	160.5	162.3
2007-11LdRC	12/17/2008	104.4	100.1	97.8	97.4	99.9	115	127.1	138.2	149.7	156.1	157.5	160.6
2007-11LdRC	12/18/2008	103.9	98.6	98.5	97.5	99.9	107.7	124.4	136.3	145.9	157.3	158	161.3
2007-11LdRC	12/19/2008	105.4	101.4	98.6	97.9	100.2	109	127.3	133.9	147.6	156.8	160.4	161.3
2007-11LdRC	12/20/2008	105.7	101.3	98.6	97.8	100.7	105.4	115	125.3	141.3	150.1	153.8	153.2
2007-11LdRC	12/21/2008	107.5	101.8	99.1	98.5	100.4	105.7	111	122.1	137.1	148.1	148.2	148.4
2007-11LdRC	12/22/2008	108.7	103.1	100.5	99.4	101.8	111.4	126.4	139.6	153.8	165.4	169.2	168.3
2007-11LdRC	12/23/2008	107.4	102.3	99.4	98.3	100.1	110.1	125	138.7	151.7	162.8	165.2	169.7
2007-11LdRC	12/24/2008	106.7	101.5	99.2	99	101.6	110.3	127.4	140	153.9	168.3	170.4	170.9
2007-11LdRC	12/25/2008	110.2	102.9	99.4	97.7	98.9	102.7	109.2	118.5	133.7	141.5	143.4	143.6
2007-11LdRC	12/26/2008	108.1	105	102.7	101.5	108.3	117	126.3	141.2	154.6	163.9	167.2	167.5
2007-11LdRC	12/27/2008	109	103	100	99.4	100.5	104.8	112.1	123.6	141.5	155.6	158.5	157
2007-11LdRC	12/28/2008	110.2	102.9	99.4	97.7	98.9	102.7	109.2	118.5	133.7	141.5	143.4	143.6
2007-11LdRC	12/29/2008	106.3	101.3	99.4	98.1	100.9	105.3	112.2	122.8	140.1	156.1	160.4	161.3
2007-11LdRC	12/30/2008	108.4	103.4	101.5	100.9	103.1	109.5	121.5	135.1	155.4	170.5	175.4	174.5
2007-11LdRC	12/31/2008	111.5	105.8	102.6	101.5	104	111.9	123.4	138.3	156.8	172.6	177.7	178.7

tblHrLoad 2008

SetID	Date	HR1	HR2	HR3	HR4	HR5	HR6	HR7	HR8	HR9	HR10	HR11	HR12
Based on Hour Ending		1	2	3	4	5	6	7	8	9	10	11	12
Total MW by Hour		40,476	38,662	37,638	37,290	38,118	41,019	46,092	51,738	57,588	61,734	63,245	63,636
Total Obs by Hour		366	366	366	366	366	366	366	366	366	366	366	366
Off Peak Hrs MW		40,476	38,662	37,638	37,290	38,118	41,019	46,092					
Total Off Peak Obs by Hour		366	366	366	366	366	366	366					
Mid Peak Hrs MW									51,738	57,588	61,734	63,245	63,636
Mid Peak Obs by Hour									366	366	366	366	366
Priority Peak Hrs MW													
Priority Peak Obs by Hour													
Total MW Check		0.00	0.00	0.00	0.00	0.00	0.00	0.00	0.00	0.00	0.00	0.00	0.00
Total Obs Check		0	0	0	0	0	0	0	0	0	0	0	0

Total Avg. MW	150.52
Off Peak Avg. MW	118.70
Mid Peak Avg. MW	169.98
Priority Peak Avg. MW	185.96

SetID	Date	HR13	HR14	HR15	HR16	HR17	HR18	HR19	HR20	HR21	HR22	HR23	HR24	DOW
2007-11LdRC	1/1/2008	169.9	169	167.9	164.6	171.6	180.8	186.6	177.5	165.8	153.2	136.4	116.3	2
2007-11LdRC	1/2/2008	166	167.5	167.9	169	169.1	174.4	193.9	191.2	177.1	157.8	138.6	114.4	3
2007-11LdRC	1/3/2008	169.6	172.6	169.1	170.6	171.8	177.2	194.8	190.8	177.1	161.5	137.6	116.6	4
2007-11LdRC	1/4/2008	167.5	167.9	167.7	167	168.1	172.3	188	184.3	170.3	156.7	136.8	118.4	5
2007-11LdRC	1/5/2008	169.9	169	167.9	164.6	171.6	180.8	186.6	177.5	165.8	153.2	136.4	116.3	6
2007-11LdRC	1/6/2008	166.4	160	156	157.5	162.3	171.6	186.4	183.6	171.6	153.3	137.9	114.5	7
2007-11LdRC	1/7/2008	168.3	168	165.4	167.7	169.8	175.6	195.2	193.5	179.1	158.9	136.5	114.9	1
2007-11LdRC	1/8/2008	162.6	165.5	164.4	165.4	167.4	175.7	194	188.6	176.2	157.1	145.8	114.3	2
2007-11LdRC	1/9/2008	166	167.5	167.9	169	169.1	174.4	193.9	191.2	177.1	157.8	138.6	114.4	3
2007-11LdRC	1/10/2008	169.6	172.6	169.1	170.6	171.8	177.2	194.8	190.8	177.1	161.5	137.6	116.6	4
2007-11LdRC	1/11/2008	167.5	167.9	167.7	167	168.1	172.3	188	184.3	170.3	156.7	136.8	118.4	5
2007-11LdRC	1/12/2008	159.3	159.8	161.8	163.4	165.8	173.1	185.5	184.9	172.6	158.4	136.1	118.9	6
2007-11LdRC	1/13/2008	155.5	153.4	150.4	153.3	155.1	170.5	182.6	177.5	165.6	149.4	128.9	111.1	7
2007-11LdRC	1/14/2008	161.8	164.2	159.8	163.7	165.9	170.2	190.5	186.9	173.9	156.7	131.8	111.9	1
2007-11LdRC	1/15/2008	165	165.4	163.4	165.8	168.5	168.7	188.3	186.2	170.9	156.3	131.1	110.5	2
2007-11LdRC	1/16/2008	156.3	159.4	160.8	161.1	161.4	165.9	184.3	182.7	170.7	154.3	129.8	110.3	3
2007-11LdRC	1/17/2008	166.9	165.5	165.4	168.2	169.9	175.1	193.5	191.6	176	159.3	134	115.3	4
2007-11LdRC	1/18/2008	169.7	168.1	168.1	170.7	169.5	173.5	188.6	181.2	175.2	160.6	141.2	121.1	5
2007-11LdRC	1/19/2008	165.8	165.4	164.6	166	170.8	176.1	189.5	187.7	174.6	162.1	141.7	123.2	6
2007-11LdRC	1/20/2008	165.4	165	163.9	165.2	166.6	172.1	191.9	187.3	178.9	166.6	144.8	125.7	7
2007-11LdRC	1/21/2008	179.5	175.9	172.7	172.8	173.4	178.4	198.2	194.6	184.2	168.3	143.5	121.5	1
2007-11LdRC	1/22/2008	172.5	169.3	167.4	167.8	169.3	175.4	191.9	190.8	177.5	164.4	134.6	116	2
2007-11LdRC	1/23/2008	174.5	172.7	173.7	173.9	175.2	179.2	194.3	190.8	177.7	159.6	137	116.5	3
2007-11LdRC	1/24/2008	170.5	168.6	167.8	170.4	171.4	178.9	194.3	191.2	176	161.6	136.6	116.5	4
2007-11LdRC	1/25/2008	177.5	176.3	175.6	173.5	172	177.6	185.3	179.8	166.8	152.8	133.5	115.9	5
2007-11LdRC	1/26/2008	152.3	152	149.8	154.3	158.4	164.1	176.6	177.9	164.2	150.1	131.7	114.5	6
2007-11LdRC	1/27/2008	160.1	158.5	160.8	163.9	166.5	168	182.4	185.8	172.9	158.9	134.2	116.2	7
2007-11LdRC	1/28/2008	175.2	174.4	176.5	177.1	178.7	184.8	199.5	200.2	181.4	158.2	138.9	118.5	1
2007-11LdRC	1/29/2008	176.2	177.1	178.1	177.6	181.2	185	202	197.8	184.4	165.4	138.4	117.7	2
2007-11LdRC	1/30/2008	177	177	178.6	179.1	179.7	180.6	194.6	196	182.4	164	139.9	119	3
2007-11LdRC	1/31/2008	167.8	173.7	174.6	177.4	177.3	179.8	195.6	195.7	181.3	164.3	139.5	119.9	4
2007-11LdRC	2/1/2008	170.9	174.6	173.7	176	176.4	177.4	188.9	188.1	169.6	153.3	133.2	114.5	5
2007-11LdRC	2/2/2008	157.6	159	158.6	159.9	164.7	170.9	180.2	176.1	162.6	145.7	126.6	110.4	6
2007-11LdRC	2/3/2008	153.3	153.4	155.9	157.9	163.6	168.1	183.9	186.2	172.7	149.4	126.7	107.9	7
2007-11LdRC	2/4/2008	169.1	170.4	169.5	171.5	173.4	172.7	200.2	198.5	180.6	157	131.5	113	1
2007-11LdRC	2/5/2008	158.4	155.6	153.5	154.3	158.1	166.5	187.3	183.6	168.7	146.4	123.2	106.1	2
2007-11LdRC	2/6/2008	155.8	152.9	152.4	155.6	160.3	168	184.6	182.1	166.3	145.7	121.5	103.9	3
2007-11LdRC	2/7/2008	153.5	152.6	148.7	152.2	159.8	168.5	189.6	183.6	166.5	145.7	124.4	105.9	4
2007-11LdRC	2/8/2008	157.6	157	155.8	158.4	163.1	167.2	182.1	179.4	167.1	148.7	128.9	110.1	5
2007-11LdRC	2/9/2008	158.4	158.9	159.8	165.2	173.1	172.3	186.2	190.2	173.3	153.3	128.8	111.4	6
2007-11LdRC	2/10/2008	164.8	165.2	161.3	163.4	164.6	167.2	184.2	196.7	180.4	156.4	129.9	110.5	7
2007-11LdRC	2/11/2008	178	176.4	177.1	179.5	180.8	182.2	198.8	199.3	185.5	162.2	134.4	113.2	1
2007-11LdRC	2/12/2008	171.2	172.2	169.7	174.5	173.3	176.8	191.1	196.5	180.4	160.4	131	110.5	2
2007-11LdRC	2/13/2008	171.6	170.3	173	175	177.3	179.2	191.4	194.1	178.4	160.8	134.4	112.6	3
2007-11LdRC	2/14/2008	168.3	171.9	172	175.3	175.2	175.7	189.6	195.5	179.1	158.3	131.4	111	4
2007-11LdRC	2/15/2008	165.1	165.5	165.7	166.5	163.1	168.3	183.1	181.3	170.7	152.8	127.9	111.5	5
2007-11LdRC	2/16/2008	145.2	143.9	144.4	146.8	150.3	156.8	170.8	171.8	159.2	145.4	124.4	109.1	6
2007-11LdRC	2/17/2008	140.8	140.5	139.4	140.5	145.6	152.2	167.5	174.1	159.7	144.2	121.3	101.9	7
2007-11LdRC	2/18/2008	155.3	156.4	155.5	157.4	158.6	162.6	175.5	181.2	166.5	146.4	123.2	106.5	1
2007-11LdRC	2/19/2008	156.6	160.8	161.1	162.3	163.8	167.7	183.1	186.1	174.8	151	124.5	107.9	2
2007-11LdRC	2/20/2008	159.2	157.5	156.3	159.3	160.8	164.7	179.4	186.7	168.5	150.3	126.5	107.3	3
2007-11LdRC	2/21/2008	159.4	157.6	159.5	163.5	165.9	166.5	181.1	187.7	171.1	152.9	130.1	108.2	4
2007-11LdRC	2/22/2008	160	160.2	162.9	163.3	160.8	163	176.3	179.6	163.9	152.7	129	112.2	5
2007-11LdRC	2/23/2008	145.9	143.5	143.1	144.9	151.2	156	166.4	170.4	158	144.1	124.6	108.6	6
2007-11LdRC	2/24/2008	142	140.9	142.6	145.8	148.8	153.7	166.8	175	161.8	145.2	123.3	108	7
2007-11LdRC	2/25/2008	150.2	150.5	152.9	154.8	161.4	166	182.1	190.4	173	153.4	124.3	107.8	1
2007-11LdRC	2/26/2008	157.6	158.3	162.1	167.1	167.9	171.6	183.8	193.5	177.7	141.6	128.6	109.6	2
2007-11LdRC	2/27/2008	162.3	162.2	164.6	165.9	167.7	169.6	180.6	190.4	174.8	157.6	130.8	112	3
2007-11LdRC	2/28/2008	163.8	165.2	166	167.6	169.1	170	181.6	193.9	177.3	157.8	130.4	111.1	4
2007-11LdRC	2/29/2008	164.4	162.3	160.7	162.1	161.3	162.3	170.3	175.7	164	149.2	126.4	110.8	5
2007-11LdRC	3/1/2008	161.2	159.8	160.5	162.8	166.5	169.3	177	181.3	171	157.8	139.6	119.6	6
2007-11LdRC	3/2/2008	157.8	159.5	159.4	160.8	165.3	170.2	178	183.5	172.9	155.8	134.8	112.3	7
2007-11LdRC	3/3/2008	169.2	169.5	170.8	173.3	171.3	174.4	183.8	190.3	179.6	162.4	139.3	117.8	1
2007-11LdRC	3/4/2008	166.5	167.7	168.5	172.4	173.4	173.6	181	186.9	176.5	160.3	138.1	115.2	2
2007-11LdRC	3/5/2008	166.1	167.7	169.1	170.7	171.8	173.7	182.4	187.7	176.8	162.3	137	114.7	3
2007-11LdRC	3/6/2008	169.2	171.3	170	172.1	175.9	174.5	183.1	189.9	180	157.9	140.3	117.9	4
2007-11LdRC	3/7/2008	171	171.8	173.3	174.5	171.4	171.3	179.3	182.5	172.2	159.6	140.4	121.6	5
2007-11LdRC	3/8/2008	166.2	163.5	165.4	168	169.8	172.2	177.5	183.6	173.2	160.6	142.4	123.5	6
2007-11LdRC	3/9/2008	159.5	160.9	160.1	159.8	164.2	168.7	178.5	187.4	177	160.3	138	118.9	7
2007-11LdRC	3/10/2008	174.5	176.2	177.3	178.5	178.3	179.9	187.7	196.1	185.6	169.6	146.3	123.9	1
2007-11LdRC	3/11/2008	183.5	184.4	185.9	187.3	186.4	186.4	194.4	199.9	189.6	174.3	150.6	129.2	2
2007-11LdRC	3/12/2008	174.6	170.8	170.7	173.4	173.8	177.6	190.7	194.9	181.9	166.9	142.8	120	3
2007-11LdRC	3/13/2008	162.1	160.6	159.8	160.4	164	168.4	177.9	181.2	171.2	155.9	134.1	114	4
2007-11LdRC	3/14/2008	162.6	162.4	162.8	163.2	164.9	167.2	174.4	180.7	168.4	158.5	136.5	118.6	5
2007-11LdRC	3/15/2008	159.8	156.1	152.9	153	156.4	159.3	167.9	173.6	164.5	150.2	131	112.8	6
2007-11LdRC	3/16/2008	148.4	149.3	149.8	150.4	155.8	161.2	169.8	174.3	166.5	149.5	126.8	108.2	7
2007-11LdRC	3/17/2008	155.6	153.7	152.2	153.5	155.6	161.2	170.9	183.8	172.7	155.8	130.5	111.3	1
2007-11LdRC	3/18/2008	155.8	154.9	152.1	152.9	155.1	158.4	171.3	180.2	170.7	156.6	128.9	108.6	2
2007-11LdRC	3/19/2008	154.5	152.8	156.9	158.7	160.8	164.3	175.3	181.3	172	155.8	132.2	111.4	3

SetID	Date	HR13	HR14	HR15	HR16	HR17	HR18	HR19	HR20	HR21	HR22	HR23	HR24	DOW
2007-11LdRC	3/20/2008	162.5	164	163.8	167.3	168	169.6	174	182	172.4	158.6	134.8	114.8	4
2007-11LdRC	3/21/2008	163.6	163.5	162.7	163.6	163.4	167.4	178.4	178.4	169.8	157.1	137.4	118.6	5
2007-11LdRC	3/22/2008	157.7	155	155.5	156.1	160.9	165.1	174.7	177.5	168.4	157	136.9	118.5	6
2007-11LdRC	3/23/2008	156.1	155	155	155.9	158.8	164	171.3	179.8	170.7	156.8	136.7	117.7	7
2007-11LdRC	3/24/2008	171.7	171	173.3	175.3	175.1	178	184.6	193	181.9	166.9	141.8	122.2	1
2007-11LdRC	3/25/2008	174.5	175.1	177.9	179.3	181.8	183.3	188.1	196.2	185.7	172.9	146.2	126.5	2
2007-11LdRC	3/26/2008	180.6	181.1	181.3	183.9	186.4	186.1	192.4	199.6	190.7	175.5	152	130.1	3
2007-11LdRC	3/27/2008	185.3	187.9	190.1	189.2	189.3	189.1	193.7	199.1	189.1	174.8	150	130.2	4
2007-11LdRC	3/28/2008	180.6	180.8	179.8	179.5	179.8	183.7	190.8	191.7	182	168.7	148.4	128	5
2007-11LdRC	3/29/2008	160.7	157.2	156.1	155.5	159.6	165.2	174.3	176.9	167.1	156.9	136.1	119.2	6
2007-11LdRC	3/30/2008	152.9	150.3	151.1	152.4	157.9	163.2	168	175.8	168.6	155.9	134.3	113	7
2007-11LdRC	3/31/2008	168.8	169	168.9	170.6	174.3	178.8	185.1	194.4	182.8	164.5	143.5	120.3	1
2007-11LdRC	4/1/2008	169.4	169	169.8	172.6	170.7	178.3	187.9	194.6	182.5	164.4	139	116.2	2
2007-11LdRC	4/2/2008	176.3	175.7	175.2	176.3	176.4	179.6	187.8	192.2	179.7	161.5	138.3	115	3
2007-11LdRC	4/3/2008	170	170.2	170.4	169.7	169.8	172.7	180.5	190.4	178.3	158.3	137.3	116.1	4
2007-11LdRC	4/4/2008	168.7	167.7	168.6	168.6	168.2	168.6	180.2	173.1	167.4	156.5	126.2	110.4	5
2007-11LdRC	4/5/2008	157.5	159	157.2	157.6	161	166.1	173.6	178.1	164.9	148.4	127	108	6
2007-11LdRC	4/6/2008	153.2	154.1	155.9	155	163.7	164	178.2	175.5	161.7	148.7	121.9	105.7	7
2007-11LdRC	4/7/2008	165.8	168.7	166.4	169.6	168	168.5	182.4	183.5	165.2	154.8	120.7	107.2	1
2007-11LdRC	4/8/2008	168.2	167.6	170.9	166.8	168.5	173	189.2	181.6	168	154	122.2	107.6	2
2007-11LdRC	4/9/2008	167.1	168.2	169.3	168.6	169.8	172.5	183.4	187.4	173.7	154.3	126	108	3
2007-11LdRC	4/10/2008	169.7	171.1	173.2	173.5	172.4	173.8	183.9	188.2	179.7	158.9	126.4	109.8	4
2007-11LdRC	4/11/2008	176.2	176.8	177.8	177.8	182	180.3	188	184.9	177.2	161.7	142.8	123.9	5
2007-11LdRC	4/12/2008	166.8	163.7	163.5	163.3	168.7	171.4	177.6	185.5	174.8	155.6	137.7	121.2	6
2007-11LdRC	4/13/2008	157.5	156.9	159.2	160.5	165.5	170.2	179	179.8	170	155.9	136	116.1	7
2007-11LdRC	4/14/2008	178.1	175.9	177.7	177.7	176.8	178.2	188.3	194.5	185.3	157.7	145.1	120.9	1
2007-11LdRC	4/15/2008	174.2	173.8	172.7	172.6	174.1	176.6	186	195.6	184.8	163.7	137	118.1	2
2007-11LdRC	4/16/2008	176.1	176.8	178.2	178.2	176.7	177.3	182.9	193.6	180	163.2	138.2	121	3
2007-11LdRC	4/17/2008	177.7	176.8	177.2	178.1	178.7	179.6	185.5	196.5	185.7	161.1	138.8	119.4	4
2007-11LdRC	4/18/2008	176.7	176.4	175.2	176.9	175.9	174.8	179	185.2	174.1	161.6	138.4	122.2	5
2007-11LdRC	4/19/2008	165.9	163.1	163.6	165.8	169	170.9	174.7	182.4	172.6	158	137.3	121.2	6
2007-11LdRC	4/20/2008	161	160.1	160.1	161.8	166.2	171	175.7	187.8	169.2	154.5	125.3	110.5	7
2007-11LdRC	4/21/2008	177.6	177.7	179.1	178.8	177.2	179.3	189	187.8	177.7	157.2	124.3	110.2	1
2007-11LdRC	4/22/2008	173.2	171.1	170.7	174.2	170.5	173.8	191.7	185.1	170.2	154.4	124.8	107.9	2
2007-11LdRC	4/23/2008	173.3	170.9	173.2	173.8	172.5	173.1	177.4	188.4	176.4	160.6	135.7	117.3	3
2007-11LdRC	4/24/2008	170.9	173.6	174.2	176.6	175.2	175.7	180.6	192.1	181.4	164.8	136.7	118.2	4
2007-11LdRC	4/25/2008	170.7	173	173.6	173.8	172.2	170.4	171.3	177.6	167	156.2	135.1	118	5
2007-11LdRC	4/26/2008	158	158.2	156.8	158.2	160.2	163	168.6	173.3	165.7	147.1	130.7	114.9	6
2007-11LdRC	4/27/2008	151.8	152.5	151.7	152.6	156.9	161.1	166.8	176.4	165.6	146.5	129	113	7
2007-11LdRC	4/28/2008	169.6	169.7	169.2	171.4	171.6	171.8	176.2	187.9	176.4	158.1	131.7	112.9	1
2007-11LdRC	4/29/2008	169.4	171.5	172.1	175.2	175.8	172.7	178.1	188	177.9	157.2	133.3	113.2	2
2007-11LdRC	4/30/2008	173.7	177.8	177.7	178.6	177.9	177.2	182.5	194.6	180.5	152.4	137.7	119.8	3
2007-11LdRC	5/1/2008	158.4	158.8	163.4	163	163.7	169	179.7	175.8	162.9	148.8	129.6	113.3	4
2007-11LdRC	5/2/2008	167.7	166.4	168	170.1	169.3	168.2	171.2	178.3	167.6	155.1	133.8	117.2	5
2007-11LdRC	5/3/2008	156.2	157.1	159.2	160.5	163.6	166.2	171.6	176.7	166.2	153.2	133.6	114.3	6
2007-11LdRC	5/4/2008	153	154.6	155	157.8	160.5	165.7	170.4	181	171.3	153.8	131.6	116.6	7
2007-11LdRC	5/5/2008	174.5	176.5	176.9	176.9	175.2	174.8	178.3	190.8	179.3	161.8	136	113.7	1
2007-11LdRC	5/6/2008	178.7	180.7	181.2	181.6	179.7	181.4	186.4	194.9	183.5	165.7	138.9	118.2	2
2007-11LdRC	5/7/2008	179.9	181.1	184	184.8	185.6	182.8	185.7	197.1	186	167.5	137.5	118.7	3
2007-11LdRC	5/8/2008	179.4	182.9	185.4	188.1	185.7	182.9	183.3	194.8	184.9	167.6	141.5	121.7	4
2007-11LdRC	5/9/2008	181.9	186.5	185.3	183.2	181.5	177.9	176.5	186.8	178.4	164.6	142.6	123.8	5
2007-11LdRC	5/10/2008	163.9	164.7	166.3	167.4	168.4	169.2	170.6	179.6	170.8	160.9	138	121	6
2007-11LdRC	5/11/2008	156.5	157	158.5	159.7	162.9	165.8	168.5	176.7	169.1	154.7	134	117.3	7
2007-11LdRC	5/12/2008	182	183.6	182.7	181	178.4	176	181.8	193.2	181	164.9	135.8	117.9	1
2007-11LdRC	5/13/2008	176	178.3	180.2	182.9	180.6	177.1	180.7	193.5	182.3	164.6	137.9	116.7	2
2007-11LdRC	5/14/2008	178.7	179	183.2	185	183.6	180.1	182.4	192.3	181.8	165.3	137.6	118.1	3
2007-11LdRC	5/15/2008	177.9	181	179.8	180.3	177.9	176.2	177.1	188.4	181.6	164.8	139.7	118	4
2007-11LdRC	5/16/2008	178.7	180.6	180.5	177.5	173.2	171.8	174.2	184.7	173.7	148.7	139.1	120.6	5
2007-11LdRC	5/17/2008	166.3	166.5	167.3	168.8	169.7	171.1	173.2	175.2	170.2	154.5	129.4	113.6	6
2007-11LdRC	5/18/2008	159.1	159.1	160.5	164.6	168.7	170	174.7	182.3	178.1	151.8	124.1	113.1	7
2007-11LdRC	5/19/2008	182.2	181.9	182.9	184.3	183.3	179.7	179.9	191.5	182.2	164.9	138.8	117.6	1
2007-11LdRC	5/20/2008	181.5	182	183.6	182.7	181.8	179.4	180.9	191.9	183.5	164.9	138.6	120.4	2
2007-11LdRC	5/21/2008	181	181.9	181.8	180.9	176.9	173.8	178.5	188.6	181	165.3	140.7	119.5	3
2007-11LdRC	5/22/2008	173.4	170.9	168.7	168.4	169.3	168.5	172.7	179.6	172.3	155.6	132.2	115	4
2007-11LdRC	5/23/2008	173.8	177.4	176	176.6	174.6	172.2	173.1	179.2	172.7	159.4	139.1	120.2	5
2007-11LdRC	5/24/2008	169.3	160.7	162.5	162.8	165.1	166.8	169.5	175.3	170	152.8	138	120.4	6
2007-11LdRC	5/25/2008	162.7	163.5	162.5	163.9	167	171.1	175.3	181.6	176.6	163.9	129.9	118.3	7
2007-11LdRC	5/26/2008	162.7	163.3	165.7	167.7	171.3	174.3	179	185.4	179.6	158.1	140.3	120.5	1
2007-11LdRC	5/27/2008	183.3	184	184.1	181.8	182.8	179.2	181.6	191.1	186.4	167.5	140.2	121.3	2
2007-11LdRC	5/28/2008	182.3	183.3	184.7	185.7	184.7	182.2	183.1	191.7	182.4	167.9	140.7	120.8	3
2007-11LdRC	5/29/2008	181.9	183.6	184.4	186.6	184	180.6	179.3	190.7	184.1	168.7	141.2	122.1	4
2007-11LdRC	5/30/2008	173.8	177.4	176	176.6	174.6	172.2	173.1	179.2	172.7	159.4	139.1	120.2	5
2007-11LdRC	5/31/2008	166.8	167.3	167.5	167.7	166.2	170.1	172.4	175.1	171.9	159.4	140.6	125.3	6
2007-11LdRC	6/1/2008	165.4	165.5	166.6	168	169.1	171.2	172	179.2	174	163.2	144.5	124.7	7
2007-11LdRC	6/2/2008	167.1	167.6	169.6	171.3	174.2	176.6	180.3	185.2	180.7	163.2	146.9	126.2	1
2007-11LdRC	6/3/2008	183.4	186.9	187.8	190.7	189.6	186.6	187.5	194.7	190.9	176.7	153.3	132	2
2007-11LdRC	6/4/2008	184.9	186.3	189.3	191.5	191.5	189.1	189.5	197.6	190.6	177.3	153.3	131.5	3
2007-11LdRC	6/5/2008	187.1	186.8	188.1	189.1	186.9	184.1	184.6	191.7	188	174.8	152	130.4	4
2007-11LdRC	6/6/2008	187.8	188.4	189.1	190.3	189.5	186.2	184.9	190.5	186	173.9	154.7	135.7	5

SetID	Date	HR13	HR14	HR15	HR16	HR17	HR18	HR19	HR20	HR21	HR22	HR23	HR24	DOW
2007-11LdRC	6/7/2008	177.4	176.3	176.8	177.9	179.9	178.9	179.1	184.5	180.6	169.9	151.8	132.7	6
2007-11LdRC	6/8/2008	169.5	168.9	170.5	171.9	174.9	176.4	176.1	184.8	181.7	169.5	149	128.8	7
2007-11LdRC	6/9/2008	184.3	186.9	188	187.9	186.1	182.2	183	191.1	186.9	172.9	150	127.6	1
2007-11LdRC	6/10/2008	183.1	184.7	185.5	187	185.1	181.7	181.6	189.3	184.2	162.8	149.4	128.2	2
2007-11LdRC	6/11/2008	185.3	185.7	187.5	188.4	187.8	184.1	183.9	190.8	185.7	173.6	151.3	129.3	3
2007-11LdRC	6/12/2008	185.3	186.6	186.5	188.3	187.7	181.9	182.6	189	184.3	170.9	150.6	138.5	4
2007-11LdRC	6/13/2008	180	180.3	180.4	183.1	184.7	184.1	180.4	186.8	182.1	170.3	151.3	134.9	5
2007-11LdRC	6/14/2008	170.6	172.4	172.3	173.8	174.7	176.5	175.2	181.1	178	165.7	146.4	132.4	6
2007-11LdRC	6/15/2008	165.7	164.2	166.4	167.9	172.6	174	175.6	183.2	179.3	167.3	147.8	128	7
2007-11LdRC	6/16/2008	188.5	184.5	189.8	190.2	189.2	188.3	187.1	194.3	190	176	153.7	132.7	1
2007-11LdRC	6/17/2008	186.3	188.7	190	190.8	187	186	186.5	190.6	190	176	153	131.2	2
2007-11LdRC	6/18/2008	183.7	188.4	188.8	187.5	188.1	184.9	182.6	189.1	186.2	172.2	151.3	131.5	3
2007-11LdRC	6/19/2008	184.5	187.2	189.9	190.4	189.5	186.1	185.1	191.4	189.5	176.8	154.3	132.9	4
2007-11LdRC	6/20/2008	185.7	184.2	185.7	187.9	187.1	185.5	182.9	187.4	184.4	173	142.1	132.3	5
2007-11LdRC	6/21/2008	174.1	173.3	175.4	176.7	178.7	178.5	177.2	182.7	179.5	169.8	150.9	132.8	6
2007-11LdRC	6/22/2008	169.6	168.9	169.3	172.1	174.1	173.5	174	179.5	177.2	167.2	150.7	129.5	7
2007-11LdRC	6/23/2008	187.9	185.8	184.8	182	180.8	180.8	183.1	189.4	185.7	171.3	150.7	130.8	1
2007-11LdRC	6/24/2008	180.7	181.3	181.5	180.8	180.4	181.4	184.1	186.1	181.8	154.6	144.3	128.9	2
2007-11LdRC	6/25/2008	182.5	182.7	182.8	181.7	180.6	181.8	185.5	190.2	185.2	171.8	155.8	128.2	3
2007-11LdRC	6/26/2008	184.9	186	187.8	188.9	186.3	182.6	183.9	190	185.6	156.9	143.3	129.4	4
2007-11LdRC	6/27/2008	184.4	185.4	185.6	182	181.8	180.3	181.9	185.1	180.3	172.3	150.2	132.4	5
2007-11LdRC	6/28/2008	174.6	175.8	176.9	178	179.6	179.9	178.5	183.6	178.1	166.3	150.2	132.4	6
2007-11LdRC	6/29/2008	167.9	167.6	168.1	169	171.4	173.6	176.5	182.1	179.7	166.7	147.8	128.3	7
2007-11LdRC	6/30/2008	184.6	183.6	183.4	182.3	181.7	181.3	182	189.8	188.2	170.4	152.3	129.5	1
2007-11LdRC	7/1/2008	184.5	183.2	186.5	185	184.7	183.8	184	194.8	189.6	173.2	143.3	124.7	2
2007-11LdRC	7/2/2008	190.8	190	189.4	187.6	185	183.4	185.7	194.5	190.5	173.9	147.6	129.6	3
2007-11LdRC	7/3/2008	191.9	189.9	190.5	188.7	188.8	187.3	186	195.9	192.6	174.6	147.3	125.8	4
2007-11LdRC	7/4/2008	171.6	171.7	172.7	175	177.8	178.4	174.3	173.9	166.3	165	144.7	128.1	5
2007-11LdRC	7/5/2008	166.8	168.4	169.6	171.3	173.9	174.5	175.8	181.9	179.5	164.9	142.3	124.7	6
2007-11LdRC	7/6/2008	160.6	161.1	162.1	163.6	166.7	169.5	172.7	180.5	178.5	164.1	141.9	123.7	7
2007-11LdRC	7/7/2008	171.6	171.7	172.7	175	177.8	178.4	174.3	173.9	166.3	165	144.7	128.1	1
2007-11LdRC	7/8/2008	194.8	195.9	196	193.9	191.7	189.6	191.3	199.5	196.6	176.1	148.2	127.2	2
2007-11LdRC	7/9/2008	189.6	191.9	193.4	195.1	193.7	191.7	190.3	199.5	194.9	174.3	150.6	131.3	3
2007-11LdRC	7/10/2008	188.1	186.5	186.2	186	184.2	184.5	187.2	200.1	188.7	173.5	146.6	125.8	4
2007-11LdRC	7/11/2008	189.7	188.5	191.7	187.5	185.3	183.2	184.1	189.9	185.4	169.7	146.2	128.1	5
2007-11LdRC	7/12/2008	177.1	175.6	174.6	176.8	177.7	179.4	178.9	185	182.6	168.3	144.6	126.3	6
2007-11LdRC	7/13/2008	167.2	166.8	164.8	166.4	171.1	176	177.1	184	180.9	166.4	142.5	124.5	7
2007-11LdRC	7/14/2008	191.9	195.1	196.6	194.2	190.8	189.6	189.9	200.6	192.5	174.7	147.6	126.3	1
2007-11LdRC	7/15/2008	188.2	188.5	190.3	192.3	191.9	189.1	190.3	199.6	195.7	175.4	146.6	126.7	2
2007-11LdRC	7/16/2008	190	189.7	193.7	194.2	193.5	192.3	190.6	199.5	193.2	176.3	148	126.8	3
2007-11LdRC	7/17/2008	191.9	194.2	196.3	197.7	195.2	192.3	192	200.3	197.6	177.7	151	128.9	4
2007-11LdRC	7/18/2008	186.5	188.5	187.9	186.2	186.7	184	183.4	191.1	185.7	160.2	148.4	128.5	5
2007-11LdRC	7/19/2008	178.5	179.9	179.6	178.9	183.2	183.8	181.6	189.6	184.2	171.3	146.1	127.3	6
2007-11LdRC	7/20/2008	167.1	169.6	168.3	170.8	173.6	177.2	178.9	188.7	185.9	168.4	144.4	125.2	7
2007-11LdRC	7/21/2008	191.6	195.2	192.6	192.6	193.7	190.6	189.9	200.1	196	176.7	148.8	127.9	1
2007-11LdRC	7/22/2008	194.5	194.5	196.2	194.2	190.9	188.5	188.4	197.9	193.4	174.6	147.1	127	2
2007-11LdRC	7/23/2008	185.7	186.3	185.4	187.9	188.8	187	187.9	197.4	194	173.6	145.8	124.9	3
2007-11LdRC	7/24/2008	179.1	181.1	183.2	183.4	184.5	183.4	183.4	197	191.3	173.8	145.4	125.6	4
2007-11LdRC	7/25/2008	189.6	188.2	190.8	189	188.8	185	183.2	190.9	187	174.9	148.4	128.6	5
2007-11LdRC	7/26/2008	177.7	178.8	179.4	181.1	184.2	185.3	184	191.4	185.6	173.1	148.2	129	6
2007-11LdRC	7/27/2008	170	169.6	172.4	174.9	178.4	181.1	184.2	195.2	189.7	173.1	146.6	126.8	7
2007-11LdRC	7/28/2008	200.9	204	203.2	203.3	200.9	196.8	195.1	206.9	201.1	184.1	153.8	132.1	1
2007-11LdRC	7/29/2008	195.9	199	203.2	202.7	201.5	195.4	194.6	204	199.5	180.9	149	127.3	2
2007-11LdRC	7/30/2008	192.5	196	197.3	192.9	195.1	193.2	191.1	199.8	191.7	174.2	148.6	128.2	3
2007-11LdRC	7/31/2008	194.9	193.1	196.2	198.7	196.6	194.8	197.3	205.4	197.7	178.2	148.3	127.7	4
2007-11LdRC	8/1/2008	191.1	190	190.3	189.7	188.8	185.5	184.5	190	187.3	174.6	153.3	134.2	5
2007-11LdRC	8/2/2008	178	178.6	180.6	179.5	181.8	184.1	183.3	189.5	186.6	174.8	151.9	133.3	6
2007-11LdRC	8/3/2008	173.4	174.5	175.4	176.8	178.4	180.1	181.7	192.9	190.2	175.4	150.2	130.3	7
2007-11LdRC	8/4/2008	194.2	194	195.8	196.4	195.2	192.6	193.9	206.2	199.9	183.3	155.7	133.8	1
2007-11LdRC	8/5/2008	196.1	196.5	198.5	198.9	196.8	194	195.8	206.1	200.1	184	154.8	133.2	2
2007-11LdRC	8/6/2008	195.3	197.8	197	195.8	193.4	191.8	190.2	197.8	192.6	178	153.7	131.6	3
2007-11LdRC	8/7/2008	187.8	190	192	195.1	192.9	192	190.3	198.1	193.1	179.1	151.3	130.6	4
2007-11LdRC	8/8/2008	187.9	191.2	192.5	194.2	193.8	191.5	190.4	197.4	191.3	177.9	156.1	135.2	5
2007-11LdRC	8/9/2008	178.7	180.4	181.7	182.4	184.3	185.9	188.3	195.5	189.3	176.2	154.8	134.5	6
2007-11LdRC	8/10/2008	176.9	178.1	177	178.4	180.9	185.4	187.8	197.4	189.3	173.4	152.3	133.2	7
2007-11LdRC	8/11/2008	203.4	205.4	207	207.4	204.5	201.5	203.8	213.5	206.1	185.1	157.6	135.6	1
2007-11LdRC	8/12/2008	203.5	205.3	207.7	208	203.5	196.9	197.2	207	201.4	181.5	155.6	134.5	2
2007-11LdRC	8/13/2008	202	204.7	205	204.9	202.6	201.8	201.5	211.6	202.9	186.3	159.9	136.8	3
2007-11LdRC	8/14/2008	199.1	201.9	201.1	201.8	199	197.9	198.5	209.1	201.8	182.8	155.6	133.6	4
2007-11LdRC	8/15/2008	193.8	194.5	196.8	199.4	198.9	194.2	191.8	199.9	192.1	175.1	154.9	134.1	5
2007-11LdRC	8/16/2008	178.1	179.9	179.9	182.8	186.3	187.6	187.9	196.1	187.1	173.3	151.2	132.5	6
2007-11LdRC	8/17/2008	170.9	171.7	175.1	175.1	178.1	181.7	185	195.5	188.3	172.3	150.3	130.1	7
2007-11LdRC	8/18/2008	200.9	199.5	199.5	196.8	197.2	196.1	198.2	211	201.4	181.2	155.3	133.6	1
2007-11LdRC	8/19/2008	195.8	197.4	194.7	193.8	193.3	191.5	192.3	203	194.3	177	153	134.2	2
2007-11LdRC	8/20/2008	194	197.7	195.5	196.2	195.2	192.9	192.9	203.9	195.6	177.6	153.3	132.8	3
2007-11LdRC	8/21/2008	196.1	198.3	200.1	199.8	196.6	190.7	191.8	200.9	192.9	177.4	154.8	140	4
2007-11LdRC	8/22/2008	190.4	190.6	191.5	191.6	192.6	191.8	201.8	200.7	190.7	173.7	156.1	137.3	5
2007-11LdRC	8/23/2008	178.8	179.9	180.3	180.1	181	180.9	179.8	189.9	181.8	169.1	148.4	129.9	6
2007-11LdRC	8/24/2008	168.3	170.5	172.5	175.2	177.5	179.2	181.7	192.9	186.6	168	146.6	128.5	7

SetID	Date	HR13	HR14	HR15	HR16	HR17	HR18	HR19	HR20	HR21	HR22	HR23	HR24	DOW
2007-11LdRC	8/25/2008	194	196.4	194	196.9	193.5	192.7	194.4	206.9	195.2	175.4	148.7	129.4	1
2007-11LdRC	8/26/2008	189.5	193.3	190.9	188	187.3	183.5	187.4	201.5	190.3	171.9	146.5	126.4	2
2007-11LdRC	8/27/2008	189.4	192.1	194	194.2	191.6	190.8	192.3	202.3	191.8	173.8	148.8	129.5	3
2007-11LdRC	8/28/2008	193.4	194.2	195.3	196.2	195.5	190.7	194.2	206.6	195.2	176.4	150.3	130.7	4
2007-11LdRC	8/29/2008	192.7	194.2	195.5	198.6	196.4	191.6	189.8	201.6	192.1	178	156.6	136.1	5
2007-11LdRC	8/30/2008	180.7	179.8	183.1	183.9	185	182.8	183.9	189.2	180.6	167.1	148	131.1	6
2007-11LdRC	8/31/2008	168.5	166.7	167.3	168.2	171.4	174.9	181	193.9	184.1	169.2	145.2	126.8	7
2007-11LdRC	9/1/2008	179.6	180.5	180.4	180.1	182.5	184.8	188.7	203	189.8	169.7	144.8	126.8	1
2007-11LdRC	9/2/2008	195.3	197.3	198.4	197.4	191.3	188	194.1	205.5	193.3	173.1	145.5	126.8	2
2007-11LdRC	9/3/2008	192.7	191.7	194.1	193.4	192.6	190.5	193.9	206.7	194.3	174.3	146.3	127.7	3
2007-11LdRC	9/4/2008	192	196.3	195.7	194.7	192.2	191	192.7	205.7	192.6	172.9	146.2	126	4
2007-11LdRC	9/5/2008	189.1	190.6	192	195.4	193	187.8	185.9	198.7	188.4	173.4	151.2	131	5
2007-11LdRC	9/6/2008	180.1	181.9	182.1	182.4	181.2	180.8	185.1	190.3	180.9	167	145.6	128.2	6
2007-11LdRC	9/7/2008	169.2	177.4	172.5	172.4	173	170.7	181.2	192	179.2	165.9	145.5	128.6	7
2007-11LdRC	9/8/2008	179.6	180.5	180.4	180.1	182.5	184.8	188.7	203	189.8	169.7	144.8	126.8	1
2007-11LdRC	9/9/2008	189.1	194.3	191.7	191.2	190.3	185.2	192.2	203.4	188.3	168	142.2	123.7	2
2007-11LdRC	9/10/2008	187.2	188.4	191.5	191.9	190.3	185.6	189.4	201.7	193.3	166.6	142.4	124.3	3
2007-11LdRC	9/11/2008	188.3	190.1	192.6	193.9	191.5	185.4	190.3	202.5	189.4	170.3	143.3	123.8	4
2007-11LdRC	9/12/2008	190.1	190.6	192.3	195.7	193	187.2	192	197.1	183.5	170	146.5	131.7	5
2007-11LdRC	9/13/2008	182.7	182.8	183.7	183.6	185.1	183.2	185.2	190.6	179.5	166.4	146.7	129.5	6
2007-11LdRC	9/14/2008	169.3	170.5	172.1	172.6	175.8	175.8	183.1	195.4	181.7	164.8	142	124.1	7
2007-11LdRC	9/15/2008	193.4	191.7	190.1	187.8	185.4	183.2	190.9	200.2	185.2	167.2	141.8	125	1
2007-11LdRC	9/16/2008	192.4	191.5	195.4	194.1	191.2	188.5	197.6	207.3	192.7	174.1	146.2	126.8	2
2007-11LdRC	9/17/2008	185.1	188.4	192.3	190.2	186.7	184	190.2	201.1	189.1	159.7	144.8	125.1	3
2007-11LdRC	9/18/2008	186.1	184.8	183.1	183.6	181.5	178.8	192.4	198.4	187	163.9	141.8	124.3	4
2007-11LdRC	9/19/2008	187.6	188.7	185.4	184.2	179.7	176.1	186.7	187.4	175.2	160.6	142.8	125.8	5
2007-11LdRC	9/20/2008	169.5	171	169.8	171.2	173.1	174.9	177.9	184.2	171.7	154.4	137.6	125.9	6
2007-11LdRC	9/21/2008	161.4	162.5	162.9	163.2	166.2	168.6	178.2	184	170.5	154.8	135.6	120.2	7
2007-11LdRC	9/22/2008	179.9	182.4	182.5	182.1	181.7	178.9	190.2	197.4	182.5	162.7	137.9	121.3	1
2007-11LdRC	9/23/2008	182.5	185.6	186.1	187.6	185	180.9	190.9	198	181.5	155.2	138.5	121.9	2
2007-11LdRC	9/24/2008	183.2	180.7	183.5	184.6	183.3	182.4	192	195.7	179.2	160.7	139.1	122.7	3
2007-11LdRC	9/25/2008	180.8	182.4	182.4	183.3	182.9	179.6	191.9	196.9	185	166.7	142.5	125.5	4
2007-11LdRC	9/26/2008	192.3	191.5	189.5	186.9	183.7	180.1	189.1	190.3	177.6	163.2	143.8	127.2	5
2007-11LdRC	9/27/2008	181.6	180	181.2	183.9	185.8	186.3	195.4	196.6	184.6	170.2	144.8	127.4	6
2007-11LdRC	9/28/2008	174.8	176.8	177.6	176.3	178.7	180.8	192	197.3	182.5	166.9	141.1	124.3	7
2007-11LdRC	9/29/2008	183.7	184.8	186.3	184.7	182.8	181.2	192.4	197.4	182.4	163	139.8	121.8	1
2007-11LdRC	9/30/2008	179.5	179.1	179.6	178	178	175.7	186.9	190.8	175.9	159.7	134.9	119.2	2
2007-11LdRC	10/1/2008	189.1	189	190.2	188.2	186.6	185.3	196.1	197.9	183.5	166.3	141.2	122.6	3
2007-11LdRC	10/2/2008	187.6	190	187.3	183.5	178.2	179.1	186.7	192.3	185.7	163.1	141.1	124.3	4
2007-11LdRC	10/3/2008	184	187	193.2	190.6	189	180.4	192.6	185.3	174.5	158.6	138.9	124.1	5
2007-11LdRC	10/4/2008	178.4	179.5	175.9	177.1	176.2	176.7	186.3	186.6	172.7	157	138.3	125.1	6
2007-11LdRC	10/5/2008	173.1	173.7	171.6	173.8	174.8	174.9	189.7	190.8	176.3	159.1	137.6	122	7
2007-11LdRC	10/6/2008	187.9	190	187.5	184.4	181.1	183.5	198.6	199.8	184.8	163.4	138.1	120	1
2007-11LdRC	10/7/2008	182.8	187.5	187.5	185.9	179.5	178.1	196.5	200	182.7	161.8	138.7	122.3	2
2007-11LdRC	10/8/2008	183.8	188.7	181.4	187.2	186.4	185.1	200	201.2	184.2	165.2	140	122.5	3
2007-11LdRC	10/9/2008	186.7	186.9	183.2	184.8	183.4	185.7	195.5	194.2	183.2	169.1	142.7	129.4	4
2007-11LdRC	10/10/2008	186.6	186.3	189.9	190.9	189.1	184.4	195.2	191.5	175.6	160.6	139.7	122.5	5
2007-11LdRC	10/11/2008	170.2	171.2	173	173.8	177.7	180.1	192.4	189.9	172.6	154.7	137.5	123.3	6
2007-11LdRC	10/12/2008	164.4	165.6	166.7	168.6	173.3	177.8	183.8	184.2	178.7	171.1	136.3	120.1	7
2007-11LdRC	10/13/2008	185.9	187.2	189.6	189	186.6	188.8	199.8	197.2	185.9	165.9	138.1	121.3	1
2007-11LdRC	10/14/2008	189	192.3	192.9	192.6	190	189.3	205.9	200.6	185.4	165	139.7	121.3	2
2007-11LdRC	10/15/2008	184.5	183.4	184.5	184.4	184.4	184.1	201.7	199	181.1	163.4	137.2	120.7	3
2007-11LdRC	10/16/2008	181.9	183.8	183.8	184.8	183.2	183.1	200.3	196.9	180.5	162.7	138.3	120.6	4
2007-11LdRC	10/17/2008	182.2	184.5	186.7	188.4	186.4	179.8	192.6	187.2	172.3	157.5	138.8	122.1	5
2007-11LdRC	10/18/2008	167	168.7	170	171.6	175.2	174.9	188.5	182.9	169.5	154.1	136.7	122	6

SetID	Date	HR13	HR14	HR15	HR16	HR17	HR18	HR19	HR20	HR21	HR22	HR23	HR24	DOW
2007-11LdRC	10/19/2008	163.9	170	177.5	179.7	181.5	186.4	203.9	198.9	182.1	162.5	140.5	123	7
2007-11LdRC	10/20/2008	195.9	197.9	199.4	199.7	195.2	189.7	210	209.5	188.8	166.1	140.7	122.8	1
2007-11LdRC	10/21/2008	186.9	186.3	185.4	184.4	185.7	188.5	204.4	200.5	182.4	161.7	137.5	119.8	2
2007-11LdRC	10/22/2008	191.1	187.2	186.3	185.4	186	186.4	210.1	205.6	187.5	166.7	141	122.3	3
2007-11LdRC	10/23/2008	194.5	197.8	200.9	201.9	197.8	187.8	205.7	211.6	196.1	168.7	142.2	125.2	4
2007-11LdRC	10/24/2008	190.5	193.2	195.2	194.9	191.8	189	201.4	192.6	178.2	163	142.2	125.4	5
2007-11LdRC	10/25/2008	173.7	174.5	175.3	175.3	177.5	180.9	194.7	180.5	171.2	156.1	138.5	121	6
2007-11LdRC	10/26/2008	157	154.6	154.6	157.7	163	173.1	191.5	184.7	169.1	152.1	131.4	116.3	7
2007-11LdRC	10/27/2008	183.7	185.6	185.1	184.2	180.7	183.4	206.5	200.9	182.4	161.3	135.9	118.4	1
2007-11LdRC	10/28/2008	181.7	184.1	186.4	189.7	189.3	187.3	207	197.3	182.9	163.1	136.3	117.9	2
2007-11LdRC	10/29/2008	182.2	187	192.3	192.1	190.5	186.7	206.4	199.4	181.7	161.7	136.3	119.1	3
2007-11LdRC	10/30/2008	179.5	177.5	184.7	186.4	185.9	185.1	205.7	198.3	180.5	162	139.6	121.2	4
2007-11LdRC	10/31/2008	182.7	185	182.5	185	178.7	192.1	186.4	180.5	166.9	155.8	138.9	127.7	5
2007-11LdRC	11/1/2008	162.7	162.1	168.5	163.3	165.7	181.4	188	170.9	158.4	150.3	135.4	124.9	6
2007-11LdRC	11/2/2008	162.6	163.5	163.8	165.2	171.5	186	197.6	182	164.6	157.2	138.3	127.5	7
2007-11LdRC	11/3/2008	188.4	193.5	191.3	193.6	190.5	186.9	182.6	174.8	165.2	157.2	142.1	130.1	1
2007-11LdRC	11/4/2008	187.4	187.4	187.2	186.8	185.2	188.9	210.6	201.1	183	162.2	137.9	126.1	2
2007-11LdRC	11/5/2008	183	184.9	184.4	186.6	186	186.6	207.3	198.3	182.3	162.8	138.6	120.8	3
2007-11LdRC	11/6/2008	180.4	182.7	182.6	180.1	180.2	183.2	204.8	195.2	179.9	161.5	139.3	120.5	4
2007-11LdRC	11/7/2008	179.7	181.5	183.1	184	181.8	181.8	198.2	188.2	174.9	159.8	141.1	124	5
2007-11LdRC	11/8/2008	167.4	165.9	165.8	167.1	169.4	176.2	190.8	180.8	166.9	154.2	138.1	122.5	6
2007-11LdRC	11/9/2008	164	164.2	163.6	164.2	165.4	172.1	191.6	184.4	171.2	155	135.7	118.2	7
2007-11LdRC	11/10/2008	178.8	179.5	179.7	180	179.5	181.9	204.8	197	180.8	161.6	138.6	121.7	1
2007-11LdRC	11/11/2008	182.4	182.7	180.2	181.3	182.4	188.8	208.9	198.8	182	163.1	139.5	120.4	2
2007-11LdRC	11/12/2008	179.5	178.8	180.1	180.8	179.7	182.6	202.4	194.6	176.8	160.8	138.5	121.3	3
2007-11LdRC	11/13/2008	176.4	176.8	177.8	178.3	177.5	180.4	197.8	188.4	173.8	159.4	137.2	119.7	4
2007-11LdRC	11/14/2008	171.3	169.8	170.4	173.9	176.7	180.2	196.1	185.1	173.6	159.1	138.2	121.1	5
2007-11LdRC	11/15/2008	163.5	168.3	165.4	169.2	173.3	178.2	193.4	184	171.6	155.8	126.6	120.6	6
2007-11LdRC	11/16/2008	162.8	164.5	165.1	165.8	169.2	179.3	195.2	184.8	169.9	149.7	130.3	117.3	7
2007-11LdRC	11/17/2008	177	177.8	179.5	179.3	179.1	190.3	198.1	195	184.5	167.4	141.8	118.1	1
2007-11LdRC	11/18/2008	186.1	184.8	184.9	182	180.8	182.4	204.1	196.4	178.8	161.2	137.8	119.3	2
2007-11LdRC	11/19/2008	175	172.9	177.5	179.2	176.9	181.1	202.8	193.8	176.4	162.1	135.7	118.9	3
2007-11LdRC	11/20/2008	175.9	175.5	178.7	177	176	180.8	200.2	188.2	175.3	160.8	137.5	116.6	4
2007-11LdRC	11/21/2008	172.3	171.2	172.5	173.4	171.8	177.4	191.2	182.7	174.1	159.5	139.2	121.5	5
2007-11LdRC	11/22/2008	167.6	162	167	172.1	172.8	179.9	186.8	183.9	172.3	158.4	138	127.5	6
2007-11LdRC	11/23/2008	164.8	164.1	166.6	171.3	173.5	179.9	200.2	192.8	174	156.7	135.6	119.7	7
2007-11LdRC	11/24/2008	177	177.8	179.5	179.3	179.1	190.3	198.1	195	184.5	167.4	141.8	118.1	1
2007-11LdRC	11/25/2008	186.1	184.8	184.9	182	180.8	182.4	204.1	196.4	178.8	161.2	137.8	119.3	2
2007-11LdRC	11/26/2008	185.6	184.1	182.4	175	187.4	199.6	210.2	198.9	184.8	178.7	147.1	126.7	3
2007-11LdRC	11/27/2008	181.9	181.7	178.4	179.1	175.5	172.6	175.3	169.2	159.5	148.9	135.2	119.5	4
2007-11LdRC	11/28/2008	177	177.3	179.7	181.1	179.2	194.2	198.5	180.9	164.2	152.2	134.9	124.4	5
2007-11LdRC	11/29/2008	169.1	168.5	166.8	172.5	172.8	194.6	194.3	177.7	168	153.7	136.6	127.5	6
2007-11LdRC	11/30/2008	157.8	156	154.2	156.2	160.6	186.5	191.3	175.5	156.6	145.1	131.6	120.1	7
2007-11LdRC	12/1/2008	171.9	175.4	172.5	170.5	182.4	178.3	199.6	190.8	175	152.9	132.4	120.8	1
2007-11LdRC	12/2/2008	176.5	177.9	169.9	173.4	172.5	179.2	198.4	192.4	173.1	154.6	130.5	114.3	2
2007-11LdRC	12/3/2008	172.5	175.6	178.7	179.2	177.8	184	203.1	195	176.7	153	134.2	117.5	3
2007-11LdRC	12/4/2008	177.3	175.5	177.7	178.1	177.4	182.6	202.5	195.9	178.9	160.6	136.2	118	4
2007-11LdRC	12/5/2008	173.4	175.8	177.8	179.3	178.1	181.5	197.2	188.2	173	160.6	140.5	119.6	5
2007-11LdRC	12/6/2008	162.3	164.5	164.7	165.4	166.5	173.3	188	180.5	168.3	155.6	136.1	120.2	6
2007-11LdRC	12/7/2008	156.3	153.9	154.6	157	161.3	175	194	188.2	164.1	146.7	130.8	111.8	7
2007-11LdRC	12/8/2008	171.4	172.9	172	170.3	168.9	175.9	198.2	189.7	174.9	157.2	135.4	114.3	1
2007-11LdRC	12/9/2008	168.2	168.1	168	167.5	166.9	171	190.4	184.8	169.9	154.1	132.3	116.2	2
2007-11LdRC	12/10/2008	160.8	164	164	161.9	163.3	173.8	186.2	185.4	170.9	153.6	134.2	116.6	3
2007-11LdRC	12/11/2008	167.1	170.4	170.2	170.5	170.3	175.8	190.9	190.4	175.6	158.8	135.7	119	4
2007-11LdRC	12/12/2008	169.1	168.1	169.4	170.5	171	175.6	191.3	181.1	167.5	154.4	137.7	119.7	5
2007-11LdRC	12/13/2008	157.2	155.2	155.9	157	160.5	167.2	182.8	174	165.6	151.4	134.5	117.8	6
2007-11LdRC	12/14/2008	151.8	151.2	152.2	154.7	158.3	168.3	190	185.4	170.8	151.3	130.9	114.1	7
2007-11LdRC	12/15/2008	164.5	165	165.9	166	166.8	171.5	194.7	189.6	172.9	153.8	131.9	117.2	1
2007-11LdRC	12/16/2008	163.4	161.6	155.2	161.3	162.2	165.9	189.2	179.8	170.4	149.5	130.7	113.9	2
2007-11LdRC	12/17/2008	160.7	162.3	165	164.5	164.2	170	189.4	184	170.7	154.2	132.9	114.6	3
2007-11LdRC	12/18/2008	160.8	160.7	162.1	163.5	164.1	169.8	190.4	184.1	171.8	157.3	134	115.9	4
2007-11LdRC	12/19/2008	162.3	162.9	162.9	162.9	163.9	168.8	175.3	174.1	166.9	150.1	127	116.5	5
2007-11LdRC	12/20/2008	154.5	150.8	151.8	153.3	156.5	163.3	181.1	175.6	162.6	151	131.9	117.3	6
2007-11LdRC	12/21/2008	146.9	146.4	149	150.2	155.8	168.2	190.8	188.8	178.1	162.7	139.8	121	7
2007-11LdRC	12/22/2008	167.8	168.6	170.4	170	169.3	181.7	190.5	188.4	180.4	167	138.2	116	1
2007-11LdRC	12/23/2008	170.8	170.8	172.8	173	175.5	182.2	206.1	199	184.1	168.9	140.8	120.3	2
2007-11LdRC	12/24/2008	173.1	173.1	175.8	176.8	177.7	184.1	205.3	199.1	184.1	168.5	141.5	122	3
2007-11LdRC	12/25/2008	142	141.6	143.9	146.9	150.6	158.5	171.6	168.1	157.8	147.7	131.7	116.6	4
2007-11LdRC	12/26/2008	167.6	167.4	167.2	166.6	166.2	173.9	191.7	186.9	173.8	161.3	140.2	121.9	5
2007-11LdRC	12/27/2008	156.9	157.3	156.7	160.5	166.9	172.3	186	172.9	159.8	151.7	136.7	121.8	6
2007-11LdRC	12/28/2008	142	141.6	143.9	146.9	150.6	158.5	171.6	168.1	157.8	147.7	131.7	116.6	7
2007-11LdRC	12/29/2008	159.3	157.8	158.8	161.3	165.4	175.6	200.8	200.3	184	165.1	140.7	121.7	1
2007-11LdRC	12/30/2008	174.9	173.4	172.3	172.4	175.4	182.6	210.1	207.8	187.6	167.4	143.8	123.8	2
2007-11LdRC	12/31/2008	178.6	179.1	176.9	180.6	187.2	197.9	211.4	202.5	184.4	170.2	148.4	130.7	3

SetID Date	HR13	HR14	HR15	HR16	HR17	HR18	HR19	HR20	HR21	HR22	HR23	HR24	DOW
Based on Hour Ending	13	14	15	16	17	18	19	20	21	22	23	24	
Total MW by Hour	63,752	63,940	64,116	64,417	64,654	65,323	68,500	69,525	65,541	59,515	51,177	44,438	
Total Obs by Hour	366	366	366	366	366	366	366	366	366	366	366	366	
Off Peak Hrs MW										59,515	51,177	44,438	
Total Off Peak Obs by Hour										366	366	366	
Mid Peak Hrs MW	63,752	63,940	64,116	64,417	64,654	18,024	18,845	19,088	18,045				
Mid Peak Obs by Hour	366	366	366	366	366	104	104	104	104				
Priority Peak Hrs MW						47,299	49,655	50,438	47,496				
Priority Peak Obs by Hour						262	262	262	262				
Total MW Check	0.00	0.00	0.00	0.00	0.00	0.00	0.00	0.00	0.00	0.00	0.00	0.00	
Total Obs Check	0	0	0	0	0	0	0	0	0	0	0	0	

Total Avg. MW
Off Peak Avg. MW
Mid Peak Avg. MW
Priority Peak Avg. MW

SetID	Date	HR1	HR2	HR3	HR4	HR5	HR6	HR7	HR8	HR9	HR10	HR11	HR12
2007-11LdRC	1/1/2009	129	121.8	113	109	106.6	111.7	116.1	124.7	142.1	162.9	176.9	176.8
2007-11LdRC	1/2/2009	106.4	100.4	97.3	96.8	99.6	112	133.1	146.8	159.7	170.1	171.6	171.3
2007-11LdRC	1/3/2009	129	121.8	113	109	106.6	111.7	116.1	124.7	142.1	162.9	176.9	176.8
2007-11LdRC	1/4/2009	110.6	103	99	98.2	102.7	107.8	116.3	129.8	148.7	166.2	175	172.5
2007-11LdRC	1/5/2009	103.3	98.4	95.9	96.8	100.5	111.5	132.2	147.1	160.9	174.2	175.6	173.6
2007-11LdRC	1/6/2009	104.4	98.2	93.9	94.5	98.5	114	130.4	143.8	156.2	165.6	168.8	169.2
2007-11LdRC	1/7/2009	103.2	99	96	95	97.6	110.1	129	143.5	155.1	164.6	168.9	168.4
2007-11LdRC	1/8/2009	107.1	99.6	95.8	96.4	100.2	112.4	131.7	145	158.2	171.3	174.2	173.7
2007-11LdRC	1/9/2009	106.4	100.4	97.3	96.8	99.6	112	133.1	146.8	159.7	170.1	171.6	171.3
2007-11LdRC	1/10/2009	108.4	101.1	96.9	95.6	98.9	105.6	113.9	131.8	149.6	160.7	163.9	162.5
2007-11LdRC	1/11/2009	109.1	102.5	100.6	99.3	101.8	106	110.9	122.6	142.2	155.4	163	163.5
2007-11LdRC	1/12/2009	101.5	96.5	94.6	93.6	98.3	103.3	131.9	146	158	167.6	169.1	167.5
2007-11LdRC	1/13/2009	102.6	97.3	94.7	94.7	98.9	110.4	131.9	144	156.2	165	168.6	168.5
2007-11LdRC	1/14/2009	99.6	94.6	92.5	92.6	96.5	108.6	129.7	142	150.7	162	164.2	163.1
2007-11LdRC	1/15/2009	101.5	96.2	93.3	94.3	97.7	112.3	135.1	148.3	159.8	169.4	170.2	169.1
2007-11LdRC	1/16/2009	105.5	100.4	98.7	99.6	103.9	116.7	137.8	153.7	162.2	174.3	176	174.5
2007-11LdRC	1/17/2009	111.2	105.7	104.6	103.4	107.2	114	121.5	136.8	157.8	169.9	170.2	170.8
2007-11LdRC	1/18/2009	113.2	106.7	104.6	104.1	105.2	110.9	122	135.9	153.3	166.2	171.3	171.1
2007-11LdRC	1/19/2009	115.7	110.8	105.7	105.9	109.3	119.1	133.8	154.2	169.8	183.2	186.2	183.5
2007-11LdRC	1/20/2009	112	107.2	104.1	103.8	107.2	118.7	142.6	157.8	169.4	179.5	180.2	178.4
2007-11LdRC	1/21/2009	105.8	99.3	96.7	96.5	101.8	114.5	137.5	151.8	163	176.1	177	177.2
2007-11LdRC	1/22/2009	104.6	101.9	98.9	97.8	102.6	115.1	139.7	153.8	165.6	176.7	176	177.1
2007-11LdRC	1/23/2009	106.8	102.3	99.3	97.8	103	113.7	132.8	151.1	167.2	179.1	183.2	180.9
2007-11LdRC	1/24/2009	105.8	98.2	95.2	94.7	98.2	103.5	113.5	127.8	145.7	157.5	159.1	159.1
2007-11LdRC	1/25/2009	102.8	97.3	94.8	93.9	96.4	102.8	112.1	124.5	143.3	155.5	160.7	161.8
2007-11LdRC	1/26/2009	105.9	98.4	97	97.4	101.2	112.8	136.6	148.9	163.1	175.3	179.9	179.3
2007-11LdRC	1/27/2009	107.2	101.8	98.1	97.7	100.9	115.4	137.6	148.7	163.1	176.3	181.7	178.4
2007-11LdRC	1/28/2009	105.5	99.7	97.2	95.8	100.2	111.1	135.9	147.7	161.8	173.9	179.3	179.2
2007-11LdRC	1/29/2009	107.9	101.7	99.1	98.2	102.8	114.6	137.1	150.6	164.6	172.2	174.4	168.6
2007-11LdRC	1/30/2009	108.9	102.6	98.2	97.8	100.5	111.3	134.6	147.6	161.1	174.3	177.6	177.9
2007-11LdRC	1/31/2009	107.3	101.7	98.7	97.4	99.6	106.1	115.8	130.6	147.3	161.4	164.7	165.2
2007-11LdRC	2/1/2009	106.1	100.7	97.8	96.6	98.2	104.3	140.8	160.2	168.4	176.7	162.4	165.7
2007-11LdRC	2/2/2009	105.6	100.7	97.6	99.2	102.2	112.8	135.7	148.9	162.1	173.1	177.1	178
2007-11LdRC	2/3/2009	109.1	103.5	99.1	98.5	102.3	111.7	135	149.8	161.3	167.9	169.7	168.3
2007-11LdRC	2/4/2009	101.9	98.2	95.3	94.4	99.7	111	134.5	148.7	159.2	167.1	169.2	167.7
2007-11LdRC	2/5/2009	101.7	96.5	93.6	94.1	99	110.8	133.1	146.8	156.9	165	167.4	165
2007-11LdRC	2/6/2009	101.2	97.5	95.5	95.1	98.8	110.2	134	149.1	160.4	169.7	171.6	170.3
2007-11LdRC	2/7/2009	105.2	100.4	96.5	96.6	99.7	105.8	117.7	133.4	153.2	165.8	167.7	167.9
2007-11LdRC	2/8/2009	107.4	101.3	98.4	97	97.5	104.5	112.3	125.8	145.3	157.5	166	169.8
2007-11LdRC	2/9/2009	107.2	102.1	99.3	98.2	101.6	113.3	135.7	150.3	165.8	177.9	182.1	184.1
2007-11LdRC	2/10/2009	109.2	104	101.7	100.1	103.4	113.9	134.6	151.8	166.7	174.4	177.9	178.5
2007-11LdRC	2/11/2009	107.3	103.5	100.8	99.5	102.4	113.5	136.4	152.3	161.5	170.9	173.6	177.4
2007-11LdRC	2/12/2009	104.3	102.3	100.4	99.9	103.4	113.4	135	150.7	164	175.5	178.2	175.3
2007-11LdRC	2/13/2009	106.8	102.2	98.7	97.7	100	111.3	133.1	147.5	161.1	170.1	171	173.5
2007-11LdRC	2/14/2009	106.1	100.5	96.7	95.6	97.6	104	114.5	129.3	142.6	159.6	161.7	159.9
2007-11LdRC	2/15/2009	105.7	99.3	96	94.3	96.9	102.2	111.4	126	142.6	152.9	155.3	153.9
2007-11LdRC	2/16/2009	100.5	96.9	94.4	94.8	97.7	108.1	129.9	135.8	156.5	165	166.8	164.7
2007-11LdRC	2/17/2009	101.5	96.9	94	93.4	97.7	109.4	130.2	146.6	159.9	169.2	168.1	165.1
2007-11LdRC	2/18/2009	105.8	98.5	95.2	94.9	97.7	108.8	131.2	145.8	156.6	166.1	167.7	168.3
2007-11LdRC	2/19/2009	103.8	99.7	97	94.6	98.4	109.5	134.7	146.3	159.3	167.1	171.1	171.1
2007-11LdRC	2/20/2009	104.1	100.5	97.8	96.5	100.6	110.2	132.9	147.1	159.5	168.3	170.8	170.2
2007-11LdRC	2/21/2009	107.3	102	98.7	96.9	98.6	104.1	115.6	131.6	149.3	160.1	161.8	159.2
2007-11LdRC	2/22/2009	103.3	98.5	96	94.9	97.2	102.6	111.1	124.6	141.4	151.8	154.4	153.3
2007-11LdRC	2/23/2009	103.5	97.9	95.1	94	96.5	104.8	117.4	130	147.1	160.8	163.6	160.9
2007-11LdRC	2/24/2009	102.8	97.6	95.5	93.8	98.4	108.8	129.5	142.5	156	166.7	169	167.9
2007-11LdRC	2/25/2009	105.8	100.1	97	96.2	100	110.9	132.4	146.2	160.2	171.4	174.7	172.5
2007-11LdRC	2/26/2009	105.9	100.8	97.9	97.5	100.8	113.2	136.7	147.5	163.8	170.5	176.5	175.6
2007-11LdRC	2/27/2009	106.8	101.4	98	97.3	100.2	112.3	134.7	147.7	164.2	174.6	176.6	175.9
2007-11LdRC	2/28/2009	106.6	101.7	97.8	95.9	98.5	104.3	117.7	130.8	150.3	163	168.5	163.8
2007-11LdRC	3/1/2009	107.5	101.8	96.9	95.2	98.7	105.4	115.4	130.8	148.2	158.6	163.9	164.4
2007-11LdRC	3/2/2009	102.4	99.9	96.9	95.9	98.8	111.3	139	150.1	167.6	169.8	172.5	171.8
2007-11LdRC	3/3/2009	103.5	98.8	95.8	95.3	96	110.3	137.7	150.1	158.3	168.9	168.7	170.2
2007-11LdRC	3/4/2009	104.5	97.8	94.5	94.7	98.7	110.6	135.1	146.5	159.6	170	169.3	168.5
2007-11LdRC	3/5/2009	105.1	98.1	96.8	95.2	98.3	112.9	133.9	149	161.2	168	171.4	172.5
2007-11LdRC	3/6/2009	108.9	100.7	95.8	95.4	97.7	111.6	135.2	148.5	160.3	170	171.3	172.2
2007-11LdRC	3/7/2009	108.8	102.1	98.6	97.4	100.1	108.7	120.9	137.2	156.5	168.1	169.9	168.8
2007-11LdRC	3/8/2009	110.3	103.9	99.9	97.4	98.7	105.6	114.3	128.3	148.7	160	162	161.9
2007-11LdRC	3/9/2009	106.4	100.9	97.5	95	100.4	113.7	137.6	152.6	167.1	176.9	178.2	178.3
2007-11LdRC	3/10/2009	112.6	106	102.2	100.4	104.4	117.1	141.7	158.8	174.6	184.3	187.8	187.5
2007-11LdRC	3/11/2009	119	113	107.6	106	108.4	120.8	146.5	161.9	173.6	179.6	180.2	179.9
2007-11LdRC	3/12/2009	107.6	101.2	97.1	96.3	100.9	113.4	138	153.7	163.1	170.6	168.6	166.7
2007-11LdRC	3/13/2009	101.7	95.6	92.8	91.9	96.4	109.8	135.2	149.1	159.9	165.4	167.2	166.8
2007-11LdRC	3/14/2009	104.8	98.8	97.4	94.6	97.7	104.5	115.7	133.1	151.1	163.2	165.5	165.7
2007-11LdRC	3/15/2009	100.1	95.2	89.7	89.8	93	100.1	108.7	132.2	144.5	152.3	152.8	152.4
2007-11LdRC	3/16/2009	99.6	91.4	90.4	89.5	94.1	108.3	132.4	144.7	155.9	160.1	165.7	158.6
2007-11LdRC	3/17/2009	98	92.9	90.4	90	95.2	109.3	133.7	147.6	157.5	163.7	164.4	161.6
2007-11LdRC	3/18/2009	95.1	91.4	88.2	87.6	93	106.2	129.1	143.7	151.3	158.9	157.7	156.1
2007-11LdRC	3/19/2009	98.5	94.8	90.5	90.9	94.8	109.3	131.7	145.3	154.3	162.8	165.1	165.2
2007-11LdRC	3/20/2009	101.3	96.1	92.5	91.2	96.2	108.2	131.1	144.2	157.3	166.7	167.5	166.1

SetID	Date	HR1	HR2	HR3	HR4	HR5	HR6	HR7	HR8	HR9	HR10	HR11	HR12
2007-11LdRC	3/21/2009	105.3	100	95.9	95	96.5	104.2	115.7	133.4	151.9	162.9	162.1	161.6
2007-11LdRC	3/22/2009	105.9	98.6	95.2	94.9	98.1	104	115.5	131.4	149	158.7	160.6	159.1
2007-11LdRC	3/23/2009	104.1	99.8	93.4	95.1	98.7	110.7	129	145.9	164.3	173.1	175.1	174.2
2007-11LdRC	3/24/2009	108.9	102.5	98.4	96.5	100	112.7	130.1	147.1	166	176.7	179.4	177.9
2007-11LdRC	3/25/2009	111.8	105.7	101.3	100.2	104.5	114.2	131	147.7	167.2	177.7	181.2	182.4
2007-11LdRC	3/26/2009	117.5	111.2	107.2	104.9	107	117.2	132.9	149.9	169.5	184.3	188.5	187.7
2007-11LdRC	3/27/2009	116.4	108.2	105.1	103	100.2	114.9	130.5	147.3	167.5	180.3	185.3	184.8
2007-11LdRC	3/28/2009	114.1	108	104.6	103.3	105.4	110.4	117	135.9	152.8	166.1	166.7	165.6
2007-11LdRC	3/29/2009	105.3	98.9	96.4	94.7	97	104.4	113.1	130.1	148.6	157.4	159.2	157.3
2007-11LdRC	3/30/2009	105.2	98	92.9	94.5	99.9	111.2	132.2	148.5	163.4	171.7	173.5	174.2
2007-11LdRC	3/31/2009	108.8	101.6	96.5	99.1	103.3	114.9	139	153.6	168.1	177.6	178.6	176.7
2007-11LdRC	4/1/2009	108	102.4	99.7	98.4	102.8	111.8	131.4	149.4	165.5	173.7	174.6	178
2007-11LdRC	4/2/2009	105.8	102.3	99.6	98.2	102.6	112.1	136.1	146.9	163.7	171.3	175.4	173.2
2007-11LdRC	4/3/2009	106.3	102.3	98.9	98.3	101.1	112.5	129.5	143.7	165.5	172	173.3	172
2007-11LdRC	4/4/2009	103.5	100.7	98.9	97.8	102.5	109.7	113.1	137.6	153.5	164.7	163.6	162.3
2007-11LdRC	4/5/2009	104.2	100.7	98.2	97.3	100.2	105.2	112.4	132.1	149	156.1	156.9	156.9
2007-11LdRC	4/6/2009	103.1	97.8	97.7	96.9	102.5	118.7	129.7	149.1	159.3	168.5	169.3	168.6
2007-11LdRC	4/7/2009	103.8	100.2	98.2	97.8	100.9	116.8	125.3	145.7	155.3	165.9	170.6	171.3
2007-11LdRC	4/8/2009	102.4	100	98	98.3	103.8	118.3	134.5	151.2	167.2	172	170.8	170.4
2007-11LdRC	4/9/2009	105.1	103.4	100.4	99.6	104.8	120	128.4	145.8	160	165.3	170.4	171.3
2007-11LdRC	4/10/2009	105.6	103.7	100.3	100.2	105.6	117.4	134.2	156.1	172.1	176.4	179.9	178.2
2007-11LdRC	4/11/2009	111.3	107.2	103.9	102.8	102.8	108.9	126	141.8	156.6	164.8	164.5	165.3
2007-11LdRC	4/12/2009	109.2	103.1	100.9	100	102	105.1	114.8	136.4	150.2	155.1	160	160.3
2007-11LdRC	4/13/2009	106.7	102.5	102.4	100.2	104.2	115	139	153	170.8	178.1	180.1	181
2007-11LdRC	4/14/2009	108.9	104.9	101.2	101.6	104.3	117	130.7	158.3	171.7	179.1	178.2	178.7
2007-11LdRC	4/15/2009	108.4	104.2	101.8	101.1	103.9	114.8	133.6	150.4	163.7	173.4	177.2	178.8
2007-11LdRC	4/16/2009	108	104.2	101.4	99.6	102.2	112.9	133	147.2	163.7	175.6	180.5	180.8
2007-11LdRC	4/17/2009	110.6	106.5	103.2	101.9	104.2	113.5	134.3	151.3	164.9	174.9	178.1	178.1
2007-11LdRC	4/18/2009	112.8	106.7	102.8	101	102.2	107.2	118.3	136.4	153.1	165.4	170.4	170.1
2007-11LdRC	4/19/2009	111.8	106.1	102.8	101.2	102.4	107.8	115.4	130.8	147.7	158.3	162.3	163.7
2007-11LdRC	4/20/2009	108.1	105.5	101.9	101.5	105.7	123	132	150.1	163.3	172.8	177.2	179
2007-11LdRC	4/21/2009	103.6	102.8	100.6	99.5	106.6	120.3	129.1	144.6	156.4	169.7	175.2	176.2
2007-11LdRC	4/22/2009	104.8	102.2	100.3	99.6	104.5	111.5	130.7	146.4	161.1	168.4	173.1	174.6
2007-11LdRC	4/23/2009	106.7	102.4	100.8	99.2	101.7	111.3	130.8	144.8	159	168.2	172.2	173.7
2007-11LdRC	4/24/2009	108.4	104.2	101.8	99.6	102.4	110.9	129.8	145.4	159.8	172.7	171.2	172.3
2007-11LdRC	4/25/2009	109.3	102.8	100.3	99.5	100.9	105.9	115.4	136.3	146	157.2	161.1	161
2007-11LdRC	4/26/2009	107.7	102.8	99.6	98.3	99.8	104.7	112.3	123.6	137.6	148.3	154.5	155.9
2007-11LdRC	4/27/2009	106.1	101.6	99	99.5	102.8	112.1	124.3	144.7	157.8	167.9	171	172.7
2007-11LdRC	4/28/2009	105.7	100.4	98.2	98.5	102	112.4	129.7	145.4	158.9	169.4	173.2	172.3
2007-11LdRC	4/29/2009	105.1	101.6	100	100.2	102.5	112.6	130.5	146.5	158.6	169.4	173.8	176.6
2007-11LdRC	4/30/2009	110.9	105	102.3	100	103.4	112.7	138.3	147.9	162.3	169.4	169.3	168
2007-11LdRC	5/1/2009	106.9	102.2	100.1	98.8	101.9	110.8	129.1	144.3	160.1	167.8	168.4	171.3
2007-11LdRC	5/2/2009	109	104	100.3	99.6	101.5	106.5	114.6	129.9	146.5	157.6	159.7	159.9
2007-11LdRC	5/3/2009	108.1	103.4	100.7	99.5	100.1	104.4	110.8	124.4	140.2	150.4	154.4	155.4
2007-11LdRC	5/4/2009	106.7	102.2	99.9	99.1	101.2	110.4	127.5	144.3	159.8	171.6	176.1	176.8
2007-11LdRC	5/5/2009	109	103.9	101.3	100.9	103.5	113	130.5	145.2	160.8	171	177.1	180.1
2007-11LdRC	5/6/2009	110.3	105.6	103	102.7	105.5	115	131.6	146.2	163.6	175.1	180.1	183.2
2007-11LdRC	5/7/2009	110.8	106.4	104.2	103.6	106.1	115.2	131.6	147.3	164.9	176.6	180	181.3
2007-11LdRC	5/8/2009	113.1	107.6	105.1	104.5	106.5	115.9	131.9	149.9	166.8	175.7	181.9	184.2
2007-11LdRC	5/9/2009	113.6	108.5	105.4	104.8	105.6	110.8	119.3	135.9	153.7	164.2	168.8	167.7
2007-11LdRC	5/10/2009	111.8	106	103.3	102	104.7	108.4	114	128.6	144.2	154.7	158.8	159.4
2007-11LdRC	5/11/2009	110.6	107	104	103.9	105.4	115.3	131.9	148.2	164.6	176.8	183.4	185.2
2007-11LdRC	5/12/2009	109.1	104.2	101	101.6	104.5	114.5	132.5	147.3	164.5	174	177.4	180
2007-11LdRC	5/13/2009	108.1	104.4	102.1	101.1	102.9	112.8	121.3	146.6	162.4	172.3	177.9	182.6
2007-11LdRC	5/14/2009	111.3	107	103.6	103.3	104.8	114.4	132.2	150.2	166.7	174.2	177.4	180.7
2007-11LdRC	5/15/2009	110.6	107.3	104.8	104.7	107.3	116.2	132.9	147.3	163.2	173.8	177.4	180.3
2007-11LdRC	5/16/2009	116.6	107.1	99.3	104.1	108	113.6	119.8	134.8	150.2	160.9	165.6	166.4
2007-11LdRC	5/17/2009	109.2	107.3	104.5	103.9	105.7	111.7	115.7	129.2	142.8	153.2	159.5	162.3
2007-11LdRC	5/18/2009	109.4	107	104.1	104.3	110.4	121.5	133.8	149.1	164.9	176.5	182.3	184.3
2007-11LdRC	5/19/2009	111.2	106.2	104.2	103.6	106.5	115.4	133.1	149.2	165.6	175.4	179.3	182.8
2007-11LdRC	5/20/2009	112.7	107.4	105.4	104.5	107.1	116.4	135.3	150.7	164.5	175.7	182.1	184.2
2007-11LdRC	5/21/2009	113.3	109.6	106.8	106.3	107.9	116.2	134.4	151.3	166.3	173.5	177.2	177.1
2007-11LdRC	5/22/2009	108.8	105.4	103.3	101.7	104.1	114.6	134	150.3	164.7	173.5	179.3	177.2
2007-11LdRC	5/23/2009	112.2	107.9	105.4	104.1	104.8	111	118.1	137.6	149.4	157.1	164.9	169.3
2007-11LdRC	5/24/2009	113.2	108.2	104.9	103.3	105.1	108.8	115.9	128.6	140.7	152.1	158.8	163.8
2007-11LdRC	5/25/2009	112.1	107	104.2	103.2	104.8	108.4	116.7	129.2	142.5	153.7	160.8	164.7
2007-11LdRC	5/26/2009	112.8	108.2	105.9	106.6	107.2	117.6	134.8	154.4	171.8	181.8	185.6	186.3
2007-11LdRC	5/27/2009	111.5	107.6	104	104.4	106.1	116.1	133.9	151.1	168.9	179.8	184	186.4
2007-11LdRC	5/28/2009	111.4	106.7	104.9	103.9	105.7	115.5	133.8	152.5	169.6	180.2	185	185.4
2007-11LdRC	5/29/2009	113.1	108.3	106.2	106.1	106	115	132.7	148.3	166.7	174.5	182.4	183.5
2007-11LdRC	5/30/2009	112.2	107.9	105.4	104.1	104.8	111	118.1	137.6	149.4	157.1	164.9	169.3
2007-11LdRC	5/31/2009	114.7	110	106.3	103.9	105	107.6	114.4	126.1	139.7	150.8	158.9	161.8
2007-11LdRC	6/1/2009	115.3	108.5	104.8	103.3	105.5	110.4	120.9	135.1	148.7	159.2	165.5	168.9
2007-11LdRC	6/2/2009	115.7	112	107.6	104.7	108	118.5	139.6	153.1	173.9	183.8	187.9	190.6
2007-11LdRC	6/3/2009	119.8	113.2	109.6	108.5	109.9	121.4	140.1	159	173.7	184	186.5	189.1
2007-11LdRC	6/4/2009	119.1	113	109.4	107.1	110	121	138.7	157.5	173.2	183	185.9	189.8
2007-11LdRC	6/5/2009	119.1	112.7	109.6	108.4	111.4	123.6	141.7	160	177.6	184.7	189	190.4
2007-11LdRC	6/6/2009	124.3	115.8	111	109.7	110.2	115	125.1	144.2	164.2	174.8	180.4	180.1
2007-11LdRC	6/7/2009	120.4	114.3	109.5	107.5	108	114	122.2	137.9	153.9	166	170.9	172.7

SetID	Date	HR1	HR2	HR3	HR4	HR5	HR6	HR7	HR8	HR9	HR10	HR11	HR12
2007-11LdRC	6/8/2009	117.8	111.4	108.4	106.5	109.3	120.6	138.4	157.2	172.4	184.6	186.7	187.5
2007-11LdRC	6/9/2009	117.9	110.9	107.2	107.3	110.1	120.1	137.5	159.1	175.1	184.4	185.9	186.8
2007-11LdRC	6/10/2009	117.1	110.2	108.2	105.5	108.2	116.5	132.7	153.6	169.8	182.8	186.5	188.1
2007-11LdRC	6/11/2009	118.2	112.7	107.9	106.8	106	117.5	134.9	155.1	171.9	183.9	186.7	188
2007-11LdRC	6/12/2009	119	112.4	108	107.1	108.6	117.4	129.4	149.6	166.1	176.5	180.2	183.3
2007-11LdRC	6/13/2009	120.5	112.7	108.8	107	108.2	115.2	122.8	140.2	158	171.2	174.1	174.2
2007-11LdRC	6/14/2009	116.9	110.3	106.1	105.1	106.7	112.6	120.5	137.8	152	161.4	166.9	168.3
2007-11LdRC	6/15/2009	117	111.4	107.1	104.2	107.3	118.3	133.9	154.9	172.7	185.1	189.5	192.6
2007-11LdRC	6/16/2009	120.5	113.6	109	107.3	110.2	122.7	135.1	156.2	172	182.2	184.8	189.5
2007-11LdRC	6/17/2009	119.4	113	109.9	108.4	110.9	120.5	136	155.2	171.1	182.1	185.6	187.2
2007-11LdRC	6/18/2009	121	113.9	108.8	106.8	109.2	119.3	133.8	153.3	168.7	181.2	186	188
2007-11LdRC	6/19/2009	121.4	114.6	110.8	109	111.1	121.9	137.2	157	174.3	184	186.6	189.4
2007-11LdRC	6/20/2009	121.1	113.9	110.1	107.9	109	117.5	124.4	142.1	159.2	169.8	174.8	176.7
2007-11LdRC	6/21/2009	120.5	113.4	108.6	107.4	107.4	114.3	125.1	140	157	165.4	171.3	173.5
2007-11LdRC	6/22/2009	118.3	110.2	108.2	106.1	110.7	121	130.2	144.9	170.3	184.8	189.6	190.7
2007-11LdRC	6/23/2009	117.8	111.2	107.7	106	108	118.4	141.5	163.9	174.2	181.2	184.2	184.5
2007-11LdRC	6/24/2009	115.9	110.3	106.8	104.2	108.2	117.9	134.4	156.6	173.9	183.3	187.4	187.3
2007-11LdRC	6/25/2009	118.3	111.9	108	106.3	109.5	120.4	137.3	155.6	171	183.9	187.6	188.2
2007-11LdRC	6/26/2009	117.8	112.8	107.6	107.2	109.6	119.8	135.4	155.3	168.5	182.8	186	187.6
2007-11LdRC	6/27/2009	121.3	114.6	109.5	107.5	108.1	115.2	125.9	143.8	161.1	172.2	176.8	177.5
2007-11LdRC	6/28/2009	120.7	113.2	108.1	106.3	107.7	113.8	123.2	137.2	153.9	165.4	170	170.7
2007-11LdRC	6/29/2009	117.4	112.4	108.1	107	110.6	118.8	137.3	155.2	172.6	182.6	187	189.7
2007-11LdRC	6/30/2009	118.2	111.7	107.5	105.4	108.8	119.2	135.4	156.2	173.9	183.5	186.7	188
2007-11LdRC	7/1/2009	117.1	112.5	110.7	110.3	111.7	117.8	130.2	147.7	169.5	183.3	190.1	193
2007-11LdRC	7/2/2009	117.8	113.4	111.9	110.8	112	118.3	131.5	149.3	171.8	187.9	190.8	193
2007-11LdRC	7/3/2009	117.2	113.4	111.2	110.6	112.1	116	129.6	147.3	167.8	181.8	187.3	189.3
2007-11LdRC	7/4/2009	117.5	113	110.6	109.4	109.9	112.3	116.3	130.5	153	165.6	174.7	172.7
2007-11LdRC	7/5/2009	117.3	114	111.3	109.4	110.3	113.1	118.2	129.2	145.7	158.3	164.2	164.7
2007-11LdRC	7/6/2009	117.5	113	110.6	109.4	109.9	112.3	116.3	130.5	153	165.6	174.7	172.7
2007-11LdRC	7/7/2009	117.9	114.2	113.1	112.1	112.7	118	128.8	149.7	170.5	188.5	193.1	196.3
2007-11LdRC	7/8/2009	119.5	115	112.6	111.4	112.5	119	131.1	150.4	172.2	187.9	190.1	193.4
2007-11LdRC	7/9/2009	119.7	114.8	112.8	112.2	114.1	120	130.5	150	169.1	183.5	189.9	192.2
2007-11LdRC	7/10/2009	118.7	114.7	113	111.8	113.3	118.5	129.3	146.4	166.9	182.9	189.7	189.9
2007-11LdRC	7/11/2009	120.5	115.8	113.4	112.8	113.5	116.4	120.8	137.2	156.6	171.3	178	179.2
2007-11LdRC	7/12/2009	118.9	114.4	112.1	111.1	111.5	113.8	117.8	131.3	148.3	160.6	168.1	170.3
2007-11LdRC	7/13/2009	117.3	113.1	111.2	110.6	112	117.7	128.4	148	167.7	182.6	190.2	193.3
2007-11LdRC	7/14/2009	118.7	114.6	112.3	112.1	113	118.7	128.9	148.7	168.9	184	192.1	192.7
2007-11LdRC	7/15/2009	118.9	114.8	113.1	112.2	113.1	118.9	129	147.3	167.7	182.6	188.8	191.4
2007-11LdRC	7/16/2009	118.3	114.5	112.2	111.7	113.1	118.9	121.8	147.5	167.9	182.9	189.7	193.6
2007-11LdRC	7/17/2009	119.7	115.5	113.3	112.7	114	120.4	129.9	147.5	166.1	180.4	186.7	189.9
2007-11LdRC	7/18/2009	119.1	115	112.7	111.3	112.3	115.4	120.6	136.3	157.3	171.8	179.2	180.8
2007-11LdRC	7/19/2009	118.9	114.4	112.4	111.3	112	114.8	118.2	130.9	149.8	164.4	169.7	171
2007-11LdRC	7/20/2009	118.3	113.7	112.4	111.6	113.1	113.6	129.1	148.3	171	188.1	193.1	195
2007-11LdRC	7/21/2009	120.4	115.5	113	112.2	113.8	119.7	129.4	148.2	169.7	186.9	194.5	196.3
2007-11LdRC	7/22/2009	118.9	114.6	112.2	111.6	113.3	119.2	129	146.8	166.1	178.5	182.7	188.4
2007-11LdRC	7/23/2009	118	113.9	111.9	110.8	112.4	118.1	129.1	145.2	163.5	178	182.6	183.9
2007-11LdRC	7/24/2009	117.8	113.3	111.5	110.1	112.3	117.4	129.7	147	166	183.3	190.2	193.6
2007-11LdRC	7/25/2009	119.7	114.4	112.3	110.6	111.8	114.4	121.8	134.7	155.1	170.1	177.4	177.7
2007-11LdRC	7/26/2009	120.7	115.6	112.9	111.3	111.8	115	119.7	132.2	150	163.6	171	172.2
2007-11LdRC	7/27/2009	121.6	115.4	113.3	112.2	113.6	119.1	131.6	153.1	174.9	190.7	201.4	204.5
2007-11LdRC	7/28/2009	122.6	117.5	114.7	114.3	115.5	122.6	135	152.7	174.9	191.1	197.1	198.8
2007-11LdRC	7/29/2009	120	115.4	113.4	112.2	113.6	118.7	130.7	149.7	170.5	185.8	192.7	195.3
2007-11LdRC	7/30/2009	119.8	115.3	113.4	112	113.6	119.7	130.9	146	169.9	187.3	193.4	195
2007-11LdRC	7/31/2009	120.2	116.5	114.3	113.3	115	121.1	132.3	152	170.1	187	191.4	193.1
2007-11LdRC	8/1/2009	123.8	117.8	114.2	112.3	113.2	118.3	124.7	142.2	159.7	174.7	181.4	183.1
2007-11LdRC	8/2/2009	122.3	118	113.9	112.8	113.1	117	121.5	136.5	155.1	167.8	175.2	176
2007-11LdRC	8/3/2009	121.6	116.1	114.1	112.2	115	121.7	134.7	154	175.4	190.6	195.5	195.1
2007-11LdRC	8/4/2009	122.5	117.6	114.5	114	115.7	122.5	135.5	155	176.9	190.7	195.9	198.3
2007-11LdRC	8/5/2009	122.7	117.4	113.9	113.2	115.6	123.9	137.1	154.3	172.6	187.5	194.3	197
2007-11LdRC	8/6/2009	120.9	115.6	112.8	112.1	113.4	122	134.4	152	171.7	185.4	192.2	192.7
2007-11LdRC	8/7/2009	119.8	114.8	111.9	110.7	112.9	121.6	133.5	153	171.6	185.3	189.3	190.2
2007-11LdRC	8/8/2009	124	117.5	114.3	111.9	112.9	117.7	124	138.8	158.3	174	179.9	182.5
2007-11LdRC	8/9/2009	123.4	118	114.6	113.3	114	118	123	137.2	156.3	169.7	176.3	179.7
2007-11LdRC	8/10/2009	124.2	118.2	115.2	113.9	115.8	124	137.7	160.5	180.1	195.8	202	206.1
2007-11LdRC	8/11/2009	123.9	118.1	114.9	114.5	116.5	124.4	138.7	159.8	181.6	197.1	204.4	206.6
2007-11LdRC	8/12/2009	124.7	118.6	114.5	113.5	115.1	122.6	135.7	155.9	176.5	192.1	198.9	203.1
2007-11LdRC	8/13/2009	126.1	120.5	117.2	115.5	116.8	125.7	138.4	159.8	180.9	194.5	198.3	197
2007-11LdRC	8/14/2009	123.2	117.2	114.1	112.8	113.1	119.1	130.8	155	172.6	187.1	194.6	197.9
2007-11LdRC	8/15/2009	123.6	117.3	113.9	111.5	111.8	117.7	122.8	137.1	158.1	174.7	180	181.1
2007-11LdRC	8/16/2009	121.9	115.9	113.4	110.9	111.5	115.1	120.1	143.5	152.2	166.4	170.4	168.4
2007-11LdRC	8/17/2009	120.7	115.5	111.7	112.2	115.3	121.6	135.9	155.3	174	192.6	198.3	201.3
2007-11LdRC	8/18/2009	124.1	117.2	116.3	113.3	116	123.3	134.8	155.5	175.7	191.8	197.7	200.3
2007-11LdRC	8/19/2009	121	114.9	112.9	110.4	113.1	120.9	134.1	152.6	171.6	187	193.1	196.3
2007-11LdRC	8/20/2009	122	117.2	113.1	112.2	114.5	114.8	135.4	153.9	176.7	190.9	196.7	199.8
2007-11LdRC	8/21/2009	122.8	116.5	113.2	112	114.5	121.2	132.8	149.2	168.6	180.1	188.5	191.1
2007-11LdRC	8/22/2009	127.1	119.9	116.1	113.9	114.3	119.2	125.2	141.5	163.2	178.3	182.9	182.8
2007-11LdRC	8/23/2009	121.1	115.1	111.2	109.2	109.7	113	117.7	129.9	149.6	162.4	168	169.1
2007-11LdRC	8/24/2009	118.8	113.1	110.1	108.8	111	117.9	130.2	149.4	170.3	186.8	194.9	196.6
2007-11LdRC	8/25/2009	120.1	114.5	111.7	110.9	113.1	120.7	133.1	152.4	169.3	183.1	189	190.7

SetID	Date	HR1	HR2	HR3	HR4	HR5	HR6	HR7	HR8	HR9	HR10	HR11	HR12
2007-11LdRC	8/26/2009	118.3	114	111.6	110.4	113.1	121.7	132.5	152.9	172.4	184	189	190.6
2007-11LdRC	8/27/2009	120.4	115.9	113.4	112.2	114.8	123.8	140	155	171.8	185.7	192.3	197
2007-11LdRC	8/28/2009	121.1	116.1	113.9	112	113.9	123.7	141.5	157.4	176.5	190.5	193.9	195.5
2007-11LdRC	8/29/2009	124.3	118.5	114.8	113.2	113.6	117.1	124.5	140.3	161.9	175.9	182.9	184.7
2007-11LdRC	8/30/2009	121.1	115.7	111.7	109.3	110.3	114.6	119.6	132.6	151.7	163.4	171.8	173.1
2007-11LdRC	8/31/2009	118.6	113.7	111	110.2	112.8	121.6	139.7	153.9	175.3	187.4	194.3	197.8
2007-11LdRC	9/1/2009	119.1	113.1	110.2	109.4	111.5	117.9	135.4	152.1	172.4	184.3	192.4	197.1
2007-11LdRC	9/2/2009	118.9	113.6	110.2	109.7	111.2	119.5	136.2	151.8	170.5	185.4	190.4	194
2007-11LdRC	9/3/2009	119.4	115.1	112.2	111.6	112.3	121.5	138.5	153.9	171.8	185	191.6	194.3
2007-11LdRC	9/4/2009	118.6	112.6	110.9	109.7	110.4	119.3	136.6	151.9	171	182.9	188.4	192.4
2007-11LdRC	9/5/2009	120.2	114.9	111.7	110.3	110.7	113.7	120.3	135.2	156.8	171.3	178.6	180.5
2007-11LdRC	9/6/2009	120	115.5	112	110.6	112	115	119.5	133.3	150.7	163.2	166.6	170.4
2007-11LdRC	9/7/2009	120.8	115.6	112.8	111.7	112.5	117.1	123.1	136.8	156.2	172.1	178.9	181.4
2007-11LdRC	9/8/2009	119	114.7	112.8	111.5	113.5	121.5	136.8	153.9	172.7	185.5	190.9	191.1
2007-11LdRC	9/9/2009	116.6	112.5	110.5	110	111.3	119.6	135	151.9	168.5	181.3	186.5	189
2007-11LdRC	9/10/2009	117.1	113.1	110.6	109.6	111.9	120.1	136.3	150.7	168.8	181.4	185.1	190.9
2007-11LdRC	9/11/2009	117.3	113.8	111.1	110.1	111.9	121.3	136.9	152.4	166.9	180.7	186.2	189.6
2007-11LdRC	9/12/2009	121.2	115.7	113.1	112	113.3	117.5	123.2	139.3	158.1	172.3	183.3	183.7
2007-11LdRC	9/13/2009	120.4	115.3	112	110.3	114.2	115.2	119.7	131.8	149.6	162.6	168.3	171
2007-11LdRC	9/14/2009	117.2	112.8	111.1	110.7	112.8	120.5	136.9	154.5	172.8	184.7	189.6	195.6
2007-11LdRC	9/15/2009	117.3	112.7	110.4	109.6	112.2	120.6	138.3	152.6	169.6	182.6	189	192.9
2007-11LdRC	9/16/2009	121.3	113.8	112	111.2	113.7	121.7	141.4	152.9	170.3	180.1	187.9	190.4
2007-11LdRC	9/17/2009	118	112.6	111.8	110.1	113.9	120.8	137.5	153.5	172.2	184	188	188.6
2007-11LdRC	9/18/2009	117.4	113.1	111.5	110.7	111.9	121.2	137.9	155.2	173.9	185.4	189.9	189
2007-11LdRC	9/19/2009	118.5	113.7	111.4	109.5	110.9	115.6	123.2	137.3	155	167	169.5	172.1
2007-11LdRC	9/20/2009	115.1	110.8	108.8	107.6	108.8	112.5	117.3	128.7	144.2	155.7	163.2	165.5
2007-11LdRC	9/21/2009	111.3	108.4	107.1	105.9	106.2	114.8	130.3	145.1	163.3	176.7	181.4	183.2
2007-11LdRC	9/22/2009	114.4	110.4	108.6	107.6	109.7	117.4	132.6	147	164.6	177.1	184.7	186.2
2007-11LdRC	9/23/2009	114.6	110.3	108.8	107.9	110.3	118.5	125.2	149.1	165.9	179.8	182.5	184.6
2007-11LdRC	9/24/2009	115.8	112.1	109.7	108.1	109.9	119.1	136.7	148.3	166	177.3	183.6	186.1
2007-11LdRC	9/25/2009	118	113.4	111.6	110.8	112.8	122	137.5	154	171.5	187.7	192.3	193.3
2007-11LdRC	9/26/2009	118.7	112.8	111.3	109.9	110.8	115.3	121.6	137.9	159.6	172.7	178.5	179.3
2007-11LdRC	9/27/2009	120.3	115.1	112.4	110.1	110.2	115.2	120.2	134.7	151.8	167	173.7	177.7
2007-11LdRC	9/28/2009	118.5	114.8	111.7	110.4	112.5	119.7	137	155.4	170.8	180.1	189	186.6
2007-11LdRC	9/29/2009	114.9	110.4	108.9	108	110.6	118.1	132.2	146.2	164.6	175.6	181	181.6
2007-11LdRC	9/30/2009	113.9	109.8	108	107.5	110.1	117.6	132.8	146.8	159.2	169.4	176.1	182.8
2007-11LdRC	10/1/2009	115.3	112.5	110.1	112.4	111	120.3	135.7	152	170.3	183.3	187.8	191.1
2007-11LdRC	10/2/2009	116.7	113.3	110.7	110.4	110.8	119.8	134.5	153	171.5	183.8	188.3	187.2
2007-11LdRC	10/3/2009	117.2	113.1	111	109.8	111.2	115.8	121.2	137.4	159.1	175.9	181.5	182.7
2007-11LdRC	10/4/2009	118.2	113.3	110.3	109	109.4	114.7	119	131.8	150.3	163	173	173
2007-11LdRC	10/5/2009	116.7	112.7	110.9	110	111.8	119	134.9	150.4	167.9	182.5	188.3	192.2
2007-11LdRC	10/6/2009	114.9	111.5	109.6	109.6	111.8	118.8	130.9	147.8	167.5	176.7	182.1	184.4
2007-11LdRC	10/7/2009	115.6	111	109.3	109	111.5	119	134.3	150.3	167.4	178.8	181.8	186.9
2007-11LdRC	10/8/2009	116.1	111.8	109.9	109.5	111.9	118.7	135.6	150.9	170.6	181.2	185.9	189
2007-11LdRC	10/9/2009	121.4	116.1	112.2	110.5	112.9	118.9	136.4	160.2	177.7	188.1	192	188.1
2007-11LdRC	10/10/2009	116.1	112.4	109.7	109	109.8	114.8	119.8	145	158	170.6	172.2	172.7
2007-11LdRC	10/11/2009	115.2	111.5	108.5	107.6	109.7	112	117.4	138.5	150.4	168.6	165.8	166.6
2007-11LdRC	10/12/2009	114.5	111.5	109.9	108.8	111	116.5	136.4	157.8	172.3	182.4	186.8	191
2007-11LdRC	10/13/2009	116.6	111.2	109.8	110.7	111.7	117.1	139.3	164	177.3	186	187.2	187.8
2007-11LdRC	10/14/2009	115	111.4	110.7	108.9	110.4	118.9	137.1	151.9	167.6	179	185.3	188.1
2007-11LdRC	10/15/2009	112.7	111	108.9	108.5	110.8	116.9	127.1	149	166.8	179.4	185.6	187.7
2007-11LdRC	10/16/2009	115	110.9	109	108.9	109.9	117.6	134.3	149.1	166.1	181.1	185.3	185.5
2007-11LdRC	10/17/2009	115.2	110.5	107.8	106.5	107.6	111	116.9	130.7	148.1	162.2	166.1	168.4
2007-11LdRC	10/18/2009	115	110.9	108.5	107.7	108.9	112.2	118	130.9	148.1	157	166.7	173
2007-11LdRC	10/19/2009	117	112.6	110.6	109.5	112.2	121.2	140	157.1	176	190.2	193.4	197.6
2007-11LdRC	10/20/2009	115.5	111.2	109.3	108.8	110.4	118.9	135	150.8	168.9	182	187.8	188.7
2007-11LdRC	10/21/2009	115	111.3	109.6	109.4	112	121.1	139	154.3	173.1	183.6	190.7	195.6
2007-11LdRC	10/22/2009	115.4	112.1	109.9	109	110.2	118.7	137.2	152.1	173.3	187.8	192.5	197
2007-11LdRC	10/23/2009	118.9	114.5	110.3	109.3	111.8	120.5	138.6	154	172.3	186.2	188.6	192.8
2007-11LdRC	10/24/2009	118.4	113.2	111.2	109.9	111.2	116.1	124.7	139.4	156.4	170	174.9	177.7
2007-11LdRC	10/25/2009	115	111.6	109.2	108.1	108.9	113	120.6	132.4	147	158.1	162.3	162.7
2007-11LdRC	10/26/2009	111.4	107.3	106	105.9	108.4	116.6	135.9	152	168.2	179.5	183.3	186.5
2007-11LdRC	10/27/2009	113	109.8	108	107.8	109.8	117.8	135.9	150.6	168.8	178.8	183.3	182.3
2007-11LdRC	10/28/2009	112.9	109.9	108.3	107.1	109.6	118.6	136.2	151.5	167.2	179.8	185.7	186.5
2007-11LdRC	10/29/2009	112.9	109.5	107.4	107	108.9	117	131.5	147.4	165.3	176.4	179.2	182.3
2007-11LdRC	10/30/2009	114.7	110.7	109	108.8	110.5	117.9	135.7	152.1	167.8	178.4	181.7	183.6
2007-11LdRC	10/31/2009	120.9	115.1	111.7	109.8	110.3	113	119.8	134.9	150.6	163.6	167.1	165.5
2007-11LdRC	11/1/2009	117.6	111.5	106.3	104.4	104.3	108.9	113.8	130.4	142.7	154	162.5	164.1
2007-11LdRC	11/2/2009	118.8	110.9	108.4	106.3	108.9	117.5	131.8	153.2	163.6	179.5	185	187.5
2007-11LdRC	11/3/2009	122.9	117	112.8	111.3	113.8	121	138	154.7	170.4	180.9	186.1	188.8
2007-11LdRC	11/4/2009	119.6	113.1	109.2	107.9	110.5	120.2	138	150.8	166.8	177.1	182.7	184.9
2007-11LdRC	11/5/2009	113.4	107.7	105.5	104.9	107.9	117.2	136.3	149.7	165.4	176.1	180.1	181.3
2007-11LdRC	11/6/2009	113	107.8	104.6	104.5	107.2	117.7	138	150.4	167.2	178.4	180.7	180.9
2007-11LdRC	11/7/2009	116.2	109.8	106.2	104.2	106.5	112.9	121.2	134.6	153.8	166.5	170.2	170.6
2007-11LdRC	11/8/2009	114.7	108.1	104.6	103.4	104.5	109.8	116.9	132.1	149.2	159.6	163.9	167.2
2007-11LdRC	11/9/2009	110.2	106.1	103.4	102.5	106.2	116.6	134	151.5	165.4	175.7	180.1	181.5
2007-11LdRC	11/10/2009	112.9	107.9	105.9	105	108	119.5	137.7	153.2	167.8	179.8	183.3	185.8
2007-11LdRC	11/11/2009	113.2	109	105.8	106.4	107.8	118.8	138.3	154.5	169	178.7	181.3	182.8
2007-11LdRC	11/12/2009	113.3	108.9	106.2	106.1	107.3	118.4	130.1	148.3	160.8	171.5	178.1	178.7

SetID	Date	HR1	HR2	HR3	HR4	HR5	HR6	HR7	HR8	HR9	HR10	HR11	HR12
2007-11LdRC	11/13/2009	111.2	106.5	102.7	102.4	104.4	112.5	123	139.6	157.7	169	174.1	174.5
2007-11LdRC	11/14/2009	112.1	106.6	103.7	102.4	103.8	109	116.9	132	151.6	162.3	165	167
2007-11LdRC	11/15/2009	112	106.6	103.8	103	103.8	108.9	116.6	128.9	145.6	155.7	162.7	164.4
2007-11LdRC	11/16/2009	110.8	105.5	101.8	101.2	103.8	114.5	129.1	145.3	158.4	165.5	170.9	175.4
2007-11LdRC	11/17/2009	113.1	108.9	106.2	105	108.4	118.8	141.9	154.1	170.4	181	186.1	187.6
2007-11LdRC	11/18/2009	110.7	107	104.6	103.9	106.4	117	135.8	150	164.7	177	176.1	180.9
2007-11LdRC	11/19/2009	111	106.6	102.5	101.7	106.2	116.6	135.2	148	163.6	171.4	176.3	178.4
2007-11LdRC	11/20/2009	110.9	105.7	103.8	101.4	104.8	116	134	148.4	163.8	170.8	174.8	174.4
2007-11LdRC	11/21/2009	112.8	106.6	103.7	102.5	103.5	109.5	122.7	139.9	160.1	170.4	169.8	171.3
2007-11LdRC	11/22/2009	119.7	113	107.4	104.6	108.5	111.1	116.7	129.1	148.3	155.6	161.1	163
2007-11LdRC	11/23/2009	112	106.5	103.8	103.5	106.1	117.5	137.4	151.9	173.1	182.2	188	189.9
2007-11LdRC	11/24/2009	113.1	108.9	106.2	105	108.4	118.8	141.9	154.1	170.4	181	186.1	187.6
2007-11LdRC	11/25/2009	110.7	107	104.6	103.9	106.4	117	135.8	150	164.7	177	176.1	180.9
2007-11LdRC	11/26/2009	117.9	110.5	105.7	105.4	108.4	115.2	125.7	141.9	161.6	179.3	184.5	185.8
2007-11LdRC	11/27/2009	111.6	106.4	104.6	104.4	107.4	111.8	124.9	138.2	157.8	172.3	177.9	179.8
2007-11LdRC	11/28/2009	116.8	110.9	106.2	104.2	106.5	110.8	120.4	134.2	153.9	167.8	174.1	175.2
2007-11LdRC	11/29/2009	120.1	112.8	109.2	106.5	109.7	114.9	120.2	131.4	146.5	154	161.6	162.9
2007-11LdRC	11/30/2009	113	105.8	103.8	101.2	105.5	115.4	133.6	149.5	162.4	176.1	177.5	180
2007-11LdRC	12/1/2009	111.1	106.7	103.3	102.1	104.1	114.6	131.1	146.5	162.6	174.1	177.6	179.4
2007-11LdRC	12/2/2009	107.2	104.5	101.9	100.9	103.3	118.7	129.6	138.3	154.5	165.9	171.7	175
2007-11LdRC	12/3/2009	108.9	104.8	101.9	101.1	103.5	112.7	132.3	140.7	153.3	169.1	175.6	177.9
2007-11LdRC	12/4/2009	109.4	104.5	102.5	102.3	105.1	113.9	132.5	140.3	155.1	167.5	173.4	176.7
2007-11LdRC	12/5/2009	111.1	106.3	103.2	102.8	104.3	108.1	116.6	126.3	139	157.3	161.1	165.9
2007-11LdRC	12/6/2009	111.7	106.9	104.7	102.1	103.4	107.1	113.8	125.4	140.8	154.2	158.3	159.6
2007-11LdRC	12/7/2009	106.4	102.5	101.7	102.9	106.5	121.3	138.3	152.9	166.5	172.6	175	174.9
2007-11LdRC	12/8/2009	109.5	104.1	102.7	101.5	104.5	114.3	131.7	143.4	156.2	165.2	170.1	171.4
2007-11LdRC	12/9/2009	106.8	102.9	99.7	99.8	102.8	110.7	122.2	137.8	148.6	154.7	159	160.9
2007-11LdRC	12/10/2009	108.2	103.7	100.7	100	103.1	112.9	126.6	137.3	156.5	164.7	167.4	168
2007-11LdRC	12/11/2009	108.1	104.2	101.7	102.2	105.1	113.4	133.6	146	148.2	157.8	169.2	170.5
2007-11LdRC	12/12/2009	109.7	105	103.1	101.7	103.5	109.2	116.6	128.6	145.5	157.2	159.6	160.3
2007-11LdRC	12/13/2009	108.5	103.9	101.7	100	101.3	105.5	112	122.8	139.4	151.6	155.4	154.6
2007-11LdRC	12/14/2009	107.1	102.8	100.7	100.5	102.9	112.4	130.7	142.8	156.8	168	169	166.5
2007-11LdRC	12/15/2009	108	103.7	101.2	101	104	112.5	129.3	141	152.4	160.9	162.6	164.6
2007-11LdRC	12/16/2009	106.1	101.9	99.7	99.3	101.7	116.6	128.7	139.9	151.6	158.1	159.6	162.8
2007-11LdRC	12/17/2009	105.6	100.5	100.3	99.5	101.7	109.4	126	138	147.8	159.4	160.1	163.5
2007-11LdRC	12/18/2009	107.1	103.2	100.5	99.8	102.1	110.6	128.8	135.6	149.4	158.8	162.5	163.5
2007-11LdRC	12/19/2009	107.4	103.1	100.5	99.7	102.5	107.1	116.6	126.9	143.1	152	155.8	155.1
2007-11LdRC	12/20/2009	109.2	103.5	101	100.3	102.2	107.4	112.6	123.6	138.8	150	150.1	150.3
2007-11LdRC	12/21/2009	110.4	104.8	102.3	101.3	103.5	113	128	141.3	155.8	167.7	171.6	170.7
2007-11LdRC	12/22/2009	109	104.1	101.3	100.2	101.9	111.7	126.5	140.4	153.7	165.1	167.5	172.1
2007-11LdRC	12/23/2009	108.4	103.3	101.1	100.9	103.4	111.9	128.9	141.7	155.9	170.7	172.9	173.4
2007-11LdRC	12/24/2009	118.6	106.6	103.7	102.5	104	111.7	123.9	140.2	159.2	174.7	179.3	178.3
2007-11LdRC	12/25/2009	111.8	104.7	101.3	99.6	100.8	104.5	110.8	120.1	135.3	143.3	145.2	145.4
2007-11LdRC	12/26/2009	110.7	104.8	101.8	101.2	102.3	106.5	113.7	125.2	143.3	157.7	160.6	159.1
2007-11LdRC	12/27/2009	111.8	104.7	101.3	99.6	100.8	104.5	110.8	120.1	135.3	143.3	145.2	145.4
2007-11LdRC	12/28/2009	107.9	103.1	101.2	100	102.7	107	113.8	124.4	141.8	158.1	162.5	163.5
2007-11LdRC	12/29/2009	110	105.2	103.3	102.7	104.8	111.1	123	136.8	157.4	173	178	177.1
2007-11LdRC	12/30/2009	113.1	107.5	104.3	103.3	105.7	113.4	125	140	158.8	175.2	180.4	181.4
2007-11LdRC	12/31/2009	118.9	111.5	105.9	103.9	106.4	117.9	128.6	147.5	165.9	174.5	175.3	180.2

SetID	Date	HR1	HR2	HR3	HR4	HR5	HR6	HR7	HR8	HR9	HR10	HR11	HR12
Based on Hour Ending		1	2	3	4	5	6	7	8	9	10	11	12
Total MW by Hour		41,237	39,373	38,317	37,964	38,814	41,797	47,007	52,764	58,737	62,951	64,485	64,895
Total Obs by Hour		365	365	365	365	365	365	365	365	365	365	365	365
Off Peak Hrs MW		41,237	39,373	38,317	37,964	38,814	41,797	47,007					
Total Off Peak Obs by Hour		365	365	365	365	365	365	365					
Mid Peak Hrs MW									52,764	58,737	62,951	64,485	64,895
Mid Peak Obs by Hour									365	365	365	365	365
Priority Peak Hrs MW													
Priority Peak Obs by Hour													
Total MW Check		0.00	0.00	0.00	0.00	0.00	0.00	0.00	0.00	0.00	0.00	0.00	0.00
Total Obs Check		0	0	0	0	0	0	0	0	0	0	0	0
Total Avg. MW			153.83										
Off Peak Avg. MW			121.27										
Mid Peak Avg. MW			173.76										
Priority Peak Avg. MW			190.00										

SetID	Date	HR13	HR14	HR15	HR16	HR17	HR18	HR19	HR20	HR21	HR22	HR23	HR24	DOW
2007-11LdRC	1/1/2009	172.9	171.9	170.8	167.4	174.6	184.2	190.3	180.8	168.6	155.6	138.4	118.1	4
2007-11LdRC	1/2/2009	170.4	170.8	170.6	169.9	171	175.4	191.7	187.8	173.3	159.2	138.9	120.2	5
2007-11LdRC	1/3/2009	172.9	171.9	170.8	167.4	174.6	184.2	190.3	180.8	168.6	155.6	138.4	118.1	6
2007-11LdRC	1/4/2009	169.2	162.6	158.6	160.1	165	174.6	190	187.1	174.6	155.7	140	116.3	7
2007-11LdRC	1/5/2009	171.2	170.9	168.2	170.6	172.8	178.8	199.2	197.4	182.4	161.5	138.5	116.7	1
2007-11LdRC	1/6/2009	165.3	168.3	167.2	168.2	170.3	178.9	198	192.4	179.4	159.7	148.1	116.1	2
2007-11LdRC	1/7/2009	168.9	170.4	170.8	171.9	172	177.6	197.9	195.1	180.3	160.3	140.7	116.2	3
2007-11LdRC	1/8/2009	172.6	175.6	172	173.6	174.8	180.4	198.9	194.6	180.3	164.2	139.7	118.4	4
2007-11LdRC	1/9/2009	170.4	170.8	170.6	169.9	171	175.4	191.7	187.8	173.3	159.2	138.9	120.2	5
2007-11LdRC	1/10/2009	161.9	162.4	164.5	166.2	168.6	176.2	189.1	188.5	175.6	161	138.1	120.7	6
2007-11LdRC	1/11/2009	158	155.8	152.8	155.7	157.6	173.5	186.1	180.8	168.4	151.7	130.9	112.9	7
2007-11LdRC	1/12/2009	164.5	167	162.4	166.4	168.8	173.1	194.4	190.6	177	159.2	133.8	113.8	1
2007-11LdRC	1/13/2009	167.8	168.2	166.2	168.6	171.5	171.7	192	189.8	173.9	158.8	133	112.3	2
2007-11LdRC	1/14/2009	158.8	162	163.4	163.7	164.1	168.8	187.8	186.2	173.7	156.8	131.8	112.1	3
2007-11LdRC	1/15/2009	169.8	168.3	168.2	171.1	172.9	178.3	197.4	195.4	179.2	161.9	136	117.1	4
2007-11LdRC	1/16/2009	172.7	171	171	173.7	172.5	176.7	192.4	184.6	178.4	163.3	143.4	122.9	5
2007-11LdRC	1/17/2009	168.6	168.2	167.4	168.9	173.8	179.3	193.3	191.4	177.8	164.9	143.9	125.1	6
2007-11LdRC	1/18/2009	168.2	167.8	166.6	168	169.4	175.2	195.8	191	182.3	169.4	147	127.6	7
2007-11LdRC	1/19/2009	182.8	179.1	175.7	175.9	176.5	181.7	202.4	198.6	187.7	171.2	145.7	123.3	1
2007-11LdRC	1/20/2009	175.5	172.2	170.3	170.7	172.2	178.6	195.8	194.6	180.8	167.2	136.7	117.8	2
2007-11LdRC	1/21/2009	177.7	175.7	176.8	177	178.4	182.5	198.3	194.6	181	162.2	139.1	118.3	3
2007-11LdRC	1/22/2009	173.5	171.6	170.7	173.4	174.4	182.3	198.3	195.1	179.2	164.3	138.6	118.3	4
2007-11LdRC	1/23/2009	180.8	179.5	178.8	176.7	175.1	180.9	188.9	183.2	169.7	155.2	135.5	117.7	5
2007-11LdRC	1/24/2009	154.8	154.4	152.2	156.8	161	166.9	179.9	181.2	167	152.5	133.6	116.3	6
2007-11LdRC	1/25/2009	162.8	161.1	163.4	166.6	169.3	170.9	185.8	189.4	176	161.5	136.2	118	7
2007-11LdRC	1/26/2009	178.4	177.6	179.7	180.3	182	188.4	203.8	204.5	184.8	160.8	141.1	120.3	1
2007-11LdRC	1/27/2009	179.4	180.3	181.3	180.9	184.6	188.6	206.4	202	187.9	168.2	140.5	119.5	2
2007-11LdRC	1/28/2009	180.2	180.2	181.9	182.4	183.1	184	198.6	200.1	185.8	166.7	142	120.8	3
2007-11LdRC	1/29/2009	170.7	176.8	177.8	180.7	180.5	183.2	199.7	199.8	184.7	167.1	141.6	121.7	4
2007-11LdRC	1/30/2009	178.3	181.3	180.5	182.5	182.8	183.6	193	192.4	177.1	162.9	143.7	123.6	5
2007-11LdRC	1/31/2009	166.7	168	167.6	168.8	172.9	178.3	186	182.6	171.1	155.8	137	118.7	6
2007-11LdRC	2/1/2009	163.1	163.2	165.5	167.4	172.7	176.7	190.7	192.7	180.8	159.4	136.6	115.6	7
2007-11LdRC	2/2/2009	177.6	178.8	177.9	179.7	181.4	180.8	204.6	203.2	187.8	166.5	141.6	121.5	1
2007-11LdRC	2/3/2009	167.8	165.3	163.3	164	167.6	175.3	193.6	190.5	177.2	156.5	132.9	113.4	2
2007-11LdRC	2/4/2009	165.4	162.7	162.3	165.3	169.6	176.6	191.3	189.1	175	155.8	131	110.5	3
2007-11LdRC	2/5/2009	163.3	162.4	158.7	162	169.1	177.1	195.6	190.5	175.3	155.8	134.1	113.1	4
2007-11LdRC	2/6/2009	167.1	166.5	165.4	167.8	172.2	175.9	189.1	186.7	175.8	158.7	139	118.2	5
2007-11LdRC	2/7/2009	167.8	168.3	169.1	174.1	181.2	180.5	192.7	196.1	181.3	163.1	138.9	119.6	6
2007-11LdRC	2/8/2009	173.7	174.1	170.5	172.4	173.5	175.9	191	201.6	187.6	166	140	118.5	7
2007-11LdRC	2/9/2009	185.5	184.1	184.8	186.9	188	189.2	203.4	203.8	192.1	171.4	144.6	121.8	1
2007-11LdRC	2/10/2009	179.5	180.4	178.2	182.4	181.3	184.5	196.9	201.5	187.6	169.7	141.1	118.6	2
2007-11LdRC	2/11/2009	179.9	178.7	181.1	182.9	184.9	186.6	197.1	199.4	185.9	170.1	144.6	121.1	3
2007-11LdRC	2/12/2009	176.8	180.1	180.2	183.2	183	183.5	195.6	200.6	186.5	167.7	141.5	119.2	4
2007-11LdRC	2/13/2009	174	174.3	174.6	175.3	172.2	176.8	190	188.5	179	162.6	137.9	119.8	5
2007-11LdRC	2/14/2009	155.3	154.1	154.5	156.9	160.2	166.3	179.1	180	168.5	155.6	134.1	116.9	6
2007-11LdRC	2/15/2009	151	150.8	149.7	150.8	155.7	162	176.1	182.1	169	154.3	130.8	108	7
2007-11LdRC	2/16/2009	164.9	166	165.1	166.9	168.1	171.7	183.3	188.3	175.3	156.5	132.9	113.8	1
2007-11LdRC	2/17/2009	166.2	170.1	170.3	171.5	172.8	176.4	190	192.6	182.7	160.9	134.2	115.5	2
2007-11LdRC	2/18/2009	168.5	167	165.8	168.6	170.1	173.6	186.7	193.1	177.1	160.2	136.4	114.8	3
2007-11LdRC	2/19/2009	168.8	167.1	168.9	172.5	174.7	175.3	188.2	194	179.4	162.7	140.2	115.8	4
2007-11LdRC	2/20/2009	169.4	169.5	171.9	172.3	170.1	172.1	184	187	172.9	162.5	139.1	120.6	5
2007-11LdRC	2/21/2009	156	153.7	153.3	155	161.1	165.6	175.2	178.8	167.5	154.2	134.3	116.3	6
2007-11LdRC	2/22/2009	152.2	151.1	152.8	155.9	158.8	163.4	175.5	182.9	171	155.3	133	115.6	7
2007-11LdRC	2/23/2009	160.1	160.4	162.7	164.5	170.6	174.8	189.1	196.3	181.1	163.2	134	115.4	1
2007-11LdRC	2/24/2009	167.1	167.7	171.2	175.8	176.5	179.9	190.6	198.9	185.2	151.8	138.6	117.5	2
2007-11LdRC	2/25/2009	171.5	171.4	173.5	174.7	176.4	178	187.8	196.3	182.7	167.1	140.9	120.3	3
2007-11LdRC	2/26/2009	172.8	174.1	174.8	176.2	177.6	178.4	188.7	199.3	184.9	167.2	140.5	119.3	4
2007-11LdRC	2/27/2009	173.4	171.5	169.9	171.2	170.5	171.5	178.7	183.5	173	159.2	136.3	118.9	5
2007-11LdRC	2/28/2009	161	159.4	160.2	162.8	167	170.3	179.4	184.6	172.3	157.2	137.9	118.5	6
2007-11LdRC	3/1/2009	159.9	161.6	161.5	163	167.6	172.8	181	186.8	175.6	157.8	136.3	113.8	7
2007-11LdRC	3/2/2009	171.8	172.1	173.5	176	173.9	177.2	187.1	194.1	182.7	164.7	140.9	119.2	1
2007-11LdRC	3/3/2009	168.9	170.2	171	175	176.1	176.3	184.1	190.4	179.4	162.5	139.7	116.6	2
2007-11LdRC	3/4/2009	168.5	170.2	171.7	173.4	174.4	176.4	185.6	191.2	179.7	164.6	138.6	116.1	3
2007-11LdRC	3/5/2009	171.8	173.9	172.6	174.7	178.7	177.3	186.3	193.6	183.1	160	141.9	119.3	4
2007-11LdRC	3/6/2009	173.7	174.4	176	177.3	174	173.9	182.3	185.7	174.8	161.7	142	123	5
2007-11LdRC	3/7/2009	168.6	165.7	167.8	170.5	172.4	174.8	180.4	186.9	175.9	162.8	144.1	124.9	6
2007-11LdRC	3/8/2009	161.6	163.1	162.3	161.9	166.5	171.2	181.5	190.9	179.9	162.5	139.6	120.3	7
2007-11LdRC	3/9/2009	177.3	179.1	180.2	181.5	181.3	183	191.2	200.2	189	172.2	148.1	125.3	1
2007-11LdRC	3/10/2009	186.8	187.7	189.3	190.8	189.8	189.8	198.4	204.3	193.3	177.1	152.4	130.6	2
2007-11LdRC	3/11/2009	177.4	173.5	173.4	176.1	176.5	180.5	194.5	198.9	185.1	169.3	144.5	121.4	3
2007-11LdRC	3/12/2009	164.4	162.8	161.9	162.6	166.3	170.9	180.9	184.3	173.8	157.9	135.6	115.5	4
2007-11LdRC	3/13/2009	164.9	164.7	165.1	165.5	167.2	169.7	177.2	183.8	170.9	160.6	138	120	5
2007-11LdRC	3/14/2009	161.9	158.1	154.9	155	158.4	161.4	170.4	176.3	166.8	152	132.5	114.2	6
2007-11LdRC	3/15/2009	150.2	151.1	151.7	152.2	157.8	163.4	172.4	177.1	168.9	151.4	128.3	109.6	7
2007-11LdRC	3/16/2009	157.6	155.7	154.1	155.5	157.6	163.4	173.6	187.1	175.4	157.8	132	112.7	1
2007-11LdRC	3/17/2009	157.8	156.9	154	154.9	157.1	160.5	173.9	183.3	173.4	158.7	130.4	110.1	2
2007-11LdRC	3/18/2009	156.4	154.7	159	160.8	163	166.6	178.1	184.4	174.6	157.8	133.7	112.8	3
2007-11LdRC	3/19/2009	164.8	166.3	166.1	169.8	170.5	172.2	176.7	185.2	175	160.7	136.3	116.2	4
2007-11LdRC	3/20/2009	165.8	165.7	165	165.8	165.6	169.9	181.4	181.4	172.4	159.2	139	120	5

SetID	Date	HR13	HR14	HR15	HR16	HR17	HR18	HR19	HR20	HR21	HR22	HR23	HR24	DOW
2007-11LdRC	3/21/2009	159.8	157	157.5	158.1	163.1	167.4	177.5	180.4	170.9	159.1	138.5	119.9	6
2007-11LdRC	3/22/2009	158.1	157	157	157.9	160.9	166.3	173.9	182.9	173.4	158.9	138.2	119.1	7
2007-11LdRC	3/23/2009	174.3	173.7	176	178.1	177.9	181	187.9	196.9	185.1	169.3	143.4	123.6	1
2007-11LdRC	3/24/2009	177.3	177.9	180.9	182.3	185	186.6	191.6	200.3	189.1	175.6	148	128	2
2007-11LdRC	3/25/2009	183.7	184.2	184.4	187.2	189.8	189.5	196.3	204	194.5	178.3	153.9	131.6	3
2007-11LdRC	3/26/2009	188.7	191.4	193.8	192.8	192.9	192.7	197.6	203.5	192.7	177.6	151.9	131.7	4
2007-11LdRC	3/27/2009	183.7	183.9	182.9	182.5	182.9	187	194.6	195.5	185.2	171.2	150.2	129.5	5
2007-11LdRC	3/28/2009	162.9	159.3	158.1	157.5	161.7	167.5	177.1	179.8	169.5	159	137.6	120.7	6
2007-11LdRC	3/29/2009	154.9	152.1	152.9	154.3	160	165.5	170.5	178.6	171.1	157.9	135.8	114.4	7
2007-11LdRC	3/30/2009	171.3	171.6	171.4	173.2	177.1	181.8	188.5	198.4	186	166.8	145.2	121.7	1
2007-11LdRC	3/31/2009	176.3	175.9	176.6	179.1	177.4	183.9	191.8	197.2	187.4	171.9	147.9	123.2	2
2007-11LdRC	4/1/2009	180.2	179.6	179.1	180.2	180.4	183.6	192	196.5	183.7	165	141.3	117.6	3
2007-11LdRC	4/2/2009	173.8	173.9	174.2	173.4	173.6	176.6	184.5	194.7	182.3	161.8	140.4	118.7	4
2007-11LdRC	4/3/2009	172.5	171.5	172.3	172.3	172	172.3	184.2	176.9	171.1	159.9	129	112.9	5
2007-11LdRC	4/4/2009	161	162.5	160.6	161.1	164.5	169.7	177.4	182	168.5	151.6	129.8	110.4	6
2007-11LdRC	4/5/2009	156.6	157.5	159.3	158.4	167.3	167.7	182.2	179.3	165.3	152	124.5	108	7
2007-11LdRC	4/6/2009	169.5	172.5	170.1	173.3	171.7	172.2	186.4	187.6	168.9	158.2	123.4	109.6	1
2007-11LdRC	4/7/2009	172	171.3	174.7	170.5	172.2	176.8	193.4	185.7	171.7	157.4	124.9	110	2
2007-11LdRC	4/8/2009	170.8	172	173.1	172.3	173.6	176.3	187.5	191.6	177.6	157.7	128.8	110.4	3
2007-11LdRC	4/9/2009	173.4	174.9	177.1	177.3	176.2	177.7	188	192.4	183.7	162.4	129.2	112.3	4
2007-11LdRC	4/10/2009	180.1	180.8	181.8	181.8	186	184.4	192.2	189.1	181.1	165.3	146	126.6	5
2007-11LdRC	4/11/2009	170.5	167.3	167.1	166.9	172.5	175.2	181.5	189.6	178.7	159	140.7	123.9	6
2007-11LdRC	4/12/2009	161	160.4	162.8	164.1	169.1	173.9	182.9	183.8	173.8	159.3	139	118.7	7
2007-11LdRC	4/13/2009	182	179.9	181.6	181.6	180.8	182.2	192.5	198.8	189.5	161.2	148.3	123.6	1
2007-11LdRC	4/14/2009	178.1	177.7	176.6	176.4	178	180.5	190.1	199.9	188.9	167.3	140	120.7	2
2007-11LdRC	4/15/2009	180	180.8	182.2	182.2	180.6	181.3	187	197.9	184	166.8	141.2	123.7	3
2007-11LdRC	4/16/2009	181.6	180.8	181.1	182	182.7	183.6	189.6	200.9	189.9	164.7	141.9	122.1	4
2007-11LdRC	4/17/2009	180.6	180.4	179.1	180.9	179.9	178.7	182.9	189.3	178	165.1	141.4	124.8	5
2007-11LdRC	4/18/2009	169.6	166.7	167.2	169.5	172.7	174.7	178.6	186.4	176.4	161.5	140.4	123.9	6
2007-11LdRC	4/19/2009	164.5	163.6	163.6	165.4	169.9	174.8	179.6	192	172.9	157.9	128.1	113	7
2007-11LdRC	4/20/2009	181.5	181.6	183.1	182.8	181.1	183.3	193.2	192	181.6	160.6	127.1	112.6	1
2007-11LdRC	4/21/2009	177.1	174.9	174.4	178.1	174.3	177.7	196	189.2	173.9	157.8	127.6	110.3	2
2007-11LdRC	4/22/2009	177.2	174.7	177.1	177.7	176.3	176.9	181.4	192.6	180.4	164.2	138.7	119.9	3
2007-11LdRC	4/23/2009	174.7	177.4	178.1	180.5	179.1	179.6	184.6	196.4	185.4	168.4	139.7	120.8	4
2007-11LdRC	4/24/2009	174.4	176.8	177.4	177.7	176.1	174.2	175.1	181.5	170.7	159.7	138	120.5	5
2007-11LdRC	4/25/2009	161.5	161.7	160.3	161.7	163.7	166.6	172.3	177.2	169.4	150.3	133.6	117.5	6
2007-11LdRC	4/26/2009	155.2	155.9	155.1	156	160.4	164.7	170.5	180.4	169.3	149.7	131.9	115.5	7
2007-11LdRC	4/27/2009	173.3	173.4	172.9	175.2	175.4	175.6	180.1	192.1	180.4	161.6	134.6	115.4	1
2007-11LdRC	4/28/2009	173.2	175.3	175.9	179.1	179.7	176.6	182	192.2	181.9	160.6	136.3	115.7	2
2007-11LdRC	4/29/2009	177.6	181.8	181.6	182.5	181.9	181.1	186.6	199	184.5	155.7	140.7	122.4	3
2007-11LdRC	4/30/2009	165.7	166.1	170.8	170.5	171.2	176.6	187.5	183.6	170.4	155.7	135.5	117.9	4
2007-11LdRC	5/1/2009	171.4	170	171.6	173.8	173	171.9	174.9	182.2	171.3	158.4	136.7	119.7	5
2007-11LdRC	5/2/2009	159.6	160.5	162.7	164	167.2	169.8	175.3	180.6	169.8	156.5	136.5	116.8	6
2007-11LdRC	5/3/2009	156.3	157.9	158.3	161.2	164	169.3	174.2	185	175.1	157.1	134.4	119.1	7
2007-11LdRC	5/4/2009	178.3	180.3	180.7	180.7	179	178.7	182.2	195	183.2	165.3	138.9	116.2	1
2007-11LdRC	5/5/2009	182.6	184.7	185.2	185.6	183.6	185.4	190.5	199.2	187.5	169.3	141.9	120.7	2
2007-11LdRC	5/6/2009	183.9	185.1	188.1	188.9	189.7	186.8	189.8	201.5	190.1	171.1	140.4	121.2	3
2007-11LdRC	5/7/2009	183.4	187	189.5	192.3	189.8	187	187.4	199.1	189	171.3	144.6	124.3	4
2007-11LdRC	5/8/2009	185.9	190.6	189.4	187.2	185.5	181.8	180.3	190.9	182.3	168.2	145.6	126.5	5
2007-11LdRC	5/9/2009	167.4	168.3	169.9	171	172	172.9	174.3	183.5	174.5	164.4	140.9	123.6	6
2007-11LdRC	5/10/2009	159.8	160.4	162	163.2	166.4	169.4	172.1	180.6	172.8	158.1	136.9	119.8	7
2007-11LdRC	5/11/2009	186	187.6	186.7	185	182.3	179.8	185.8	197.5	185	168.5	138.7	120.4	1
2007-11LdRC	5/12/2009	179.8	182.2	184.2	187	184.6	181	184.7	197.8	186.3	168.2	140.8	119.2	2
2007-11LdRC	5/13/2009	182.6	183	187.2	189.1	187.6	184	186.4	196.6	185.8	168.9	140.5	120.7	3
2007-11LdRC	5/14/2009	181.8	185	183.8	184.3	181.8	180.1	181	192.5	185.6	168.4	142.6	120.6	4
2007-11LdRC	5/15/2009	182.6	184.6	184.4	181.4	177	175.6	178	188.7	177.5	151.9	142.1	123.2	5
2007-11LdRC	5/16/2009	169.9	170.1	170.9	172.5	173.4	174.8	177	179	173.9	157.8	132.2	116.1	6
2007-11LdRC	5/17/2009	162.6	162.6	164	168.2	172.4	173.7	178.5	186.3	182.1	155	126.7	115.6	7
2007-11LdRC	5/18/2009	186.2	185.9	187	188.3	187.4	183.6	183.9	195.7	186.2	168.5	141.8	120.1	1
2007-11LdRC	5/19/2009	185.5	186	187.6	186.7	185.8	183.4	184.8	196.1	187.5	168.5	141.6	123	2
2007-11LdRC	5/20/2009	185	185.9	185.8	184.8	180.7	177.6	182.4	192.8	185	168.9	143.7	122	3
2007-11LdRC	5/21/2009	177.2	174.7	172.4	172	173	172.1	176.5	183.5	176.1	159	135.1	117.5	4
2007-11LdRC	5/22/2009	177.6	181.3	179.8	180.5	178.4	176	176.8	183.1	176.5	162.8	142.1	122.7	5
2007-11LdRC	5/23/2009	173	164.1	166.1	166.3	168.7	170.4	173.2	179.2	173.7	156.1	140.9	123	6
2007-11LdRC	5/24/2009	166.2	167.1	166.1	167.4	170.6	174.8	179.2	185.6	180.5	167.4	132.7	120.8	7
2007-11LdRC	5/25/2009	166.2	166.8	169.3	171.4	175.1	178.1	183	189.5	183.5	161.5	143.3	123.1	1
2007-11LdRC	5/26/2009	187.4	188.1	188.2	185.8	186.8	183.1	185.6	195.3	190.5	171.1	143.2	123.9	2
2007-11LdRC	5/27/2009	186.3	187.4	188.7	189.8	188.7	186.2	187.1	196	186.4	171.5	143.7	123.4	3
2007-11LdRC	5/28/2009	185.9	187.6	188.5	190.8	188.1	184.6	183.2	194.9	188.2	172.4	144.2	124.7	4
2007-11LdRC	5/29/2009	184.2	184.6	185	185.1	182.1	179	177.6	185.4	177.5	165	143.9	130.7	5
2007-11LdRC	5/30/2009	173	164.1	166.1	166.3	168.7	170.4	173.2	179.2	173.7	156.1	140.9	123	6
2007-11LdRC	5/31/2009	164.1	164.2	165.6	167.3	168.7	171.3	172.3	181.5	174.8	161.5	140.7	121.8	7
2007-11LdRC	6/1/2009	170.1	170.7	172.7	174.5	177.5	180	183.8	188.9	184.2	166.1	149.4	128.4	1
2007-11LdRC	6/2/2009	187	190.7	191.7	194.7	193.5	190.3	191.4	198.9	194.9	180.1	155.9	134.3	2
2007-11LdRC	6/3/2009	188.6	190	193.2	195.5	195.5	193	193.4	201.9	194.6	180.7	155.9	133.8	3
2007-11LdRC	6/4/2009	190.9	190.5	192	193	190.6	187.7	188.2	195.7	191.9	178.1	154.6	132.6	4
2007-11LdRC	6/5/2009	191.7	192.3	193	194.2	193.4	189.9	188.6	194.5	189.7	177.2	157.4	138	5
2007-11LdRC	6/6/2009	180.8	179.7	180.2	181.3	183.4	182.4	182.6	188.1	184.1	173	154.4	135	6
2007-11LdRC	6/7/2009	172.6	172	173.7	175.1	178.2	179.8	179.5	188.5	185.2	172.6	151.5	131.1	7

SetID	Date	HR13	HR14	HR15	HR16	HR17	HR18	HR19	HR20	HR21	HR22	HR23	HR24	DOW
2007-11LdRC	6/8/2009	187.9	190.6	191.9	191.8	189.8	185.8	186.6	195.1	190.7	176.1	152.5	129.8	1
2007-11LdRC	6/9/2009	186.7	188.4	189.2	190.8	188.8	185.2	185.1	193.2	187.8	165.7	151.9	130.4	2
2007-11LdRC	6/10/2009	189	189.4	191.4	192.3	191.7	187.7	187.5	194.8	189.4	176.9	153.9	131.6	3
2007-11LdRC	6/11/2009	189	190.3	190.2	192.2	191.6	185.5	186.2	192.9	187.9	174.1	153.1	140.8	4
2007-11LdRC	6/12/2009	183.5	183.8	183.9	186.7	188.4	187.7	183.9	190.5	185.7	173.5	153.9	137.2	5
2007-11LdRC	6/13/2009	173.8	175.6	175.5	177.1	178	179.9	178.5	184.6	181.4	168.7	148.9	134.7	6
2007-11LdRC	6/14/2009	168.7	167.1	169.4	171	175.8	177.3	178.9	186.8	182.8	170.3	150.3	130.2	7
2007-11LdRC	6/15/2009	192.4	188.1	193.7	194.1	193.1	192.2	190.9	198.4	193.9	179.4	156.4	135	1
2007-11LdRC	6/16/2009	190	192.6	193.9	194.8	190.8	189.7	190.2	194.6	193.9	179.4	155.6	133.4	2
2007-11LdRC	6/17/2009	187.3	192.3	192.7	191.4	192	188.6	186.2	193	189.9	175.4	153.9	133.8	3
2007-11LdRC	6/18/2009	188.1	191	193.8	194.4	193.4	189.8	188.8	195.4	193.4	180.2	157	135.2	4
2007-11LdRC	6/19/2009	189.4	187.8	189.4	191.8	190.9	189.2	186.5	191.2	188	176.2	144.5	134.6	5
2007-11LdRC	6/20/2009	177.4	176.6	178.7	180.1	182.1	181.9	180.6	186.3	183	172.9	153.5	135.1	6
2007-11LdRC	6/21/2009	172.7	172	172.4	175.3	177.4	176.8	177.3	183	180.6	170.2	153.3	131.8	7
2007-11LdRC	6/22/2009	191.8	189.5	188.5	185.6	184.3	184.3	186.7	193.3	189.4	174.5	153.3	133	1
2007-11LdRC	6/23/2009	184.2	184.8	185	184.3	183.9	184.9	187.7	189.8	185.4	157.3	146.7	131.2	2
2007-11LdRC	6/24/2009	186.1	186.3	186.4	185.2	184.1	185.4	189.2	194.1	188.9	175	158.5	130.4	3
2007-11LdRC	6/25/2009	188.6	189.7	191.7	192.8	190	186.2	187.5	193.9	189.3	159.6	145.7	131.7	4
2007-11LdRC	6/26/2009	188	189.1	189.3	185.6	185.4	183.8	185.5	188.8	183.8	175.5	152.7	134.7	5
2007-11LdRC	6/27/2009	177.9	179.1	180.3	181.4	183.1	183.4	181.9	187.2	181.5	169.3	152.7	134.7	6
2007-11LdRC	6/28/2009	171	170.7	171.2	172.1	174.6	176.9	179.9	185.7	183.2	169.7	150.3	130.5	7
2007-11LdRC	6/29/2009	188.2	187.2	187	185.9	185.2	184.8	185.6	193.7	192.1	173.6	154.9	131.8	1
2007-11LdRC	6/30/2009	188.8	187.8	190.1	189.1	188.9	188.2	188.4	195.8	192.3	180.5	154.9	134.2	2
2007-11LdRC	7/1/2009	194.7	193.9	193.3	191.4	188.7	187	189.4	198.5	194.4	177.2	150.1	131.8	3
2007-11LdRC	7/2/2009	195.8	193.8	194.4	192.5	192.7	191.1	189.7	200	196.6	178	149.9	128	4
2007-11LdRC	7/3/2009	187.6	190.5	194.7	196.3	194.1	191.1	187.3	191.4	188.2	174	149.7	129.9	5
2007-11LdRC	7/4/2009	174.9	175	176	178.4	181.3	181.8	177.7	177.2	169.4	168.1	147.2	130.3	6
2007-11LdRC	7/5/2009	163.5	164	165.1	166.6	169.8	172.7	176	184	182	167.1	144.3	125.9	7
2007-11LdRC	7/6/2009	174.9	175	176	178.4	181.3	181.8	177.7	177.2	169.4	168.1	147.2	130.3	1
2007-11LdRC	7/7/2009	198.8	200	200.1	197.9	195.6	193.4	195.2	203.7	200.8	179.5	150.8	129.4	2
2007-11LdRC	7/8/2009	193.4	195.8	197.4	199.1	197.7	195.6	194.2	203.7	199	177.7	153.2	133.5	3
2007-11LdRC	7/9/2009	191.9	190.2	189.9	189.7	187.9	188.2	191	204.4	192.5	176.8	149.1	127.9	4
2007-11LdRC	7/10/2009	193.6	192.4	195.6	191.3	189	186.9	187.8	193.8	189.1	172.9	148.8	130.3	5
2007-11LdRC	7/11/2009	180.5	179	178	180.2	181.1	182.9	182.4	188.7	186.3	171.4	147.1	128.5	6
2007-11LdRC	7/12/2009	170.3	169.9	167.8	169.5	174.3	179.4	180.5	187.6	184.5	169.5	145	126.7	7
2007-11LdRC	7/13/2009	195.8	199.1	200.8	198.2	194.7	193.4	193.8	204.9	196.4	178.1	150.1	128.5	1
2007-11LdRC	7/14/2009	192.1	192.4	194.2	196.3	195.8	193	194.2	203.9	199.8	178.8	149.1	128.9	2
2007-11LdRC	7/15/2009	193.9	193.6	197.7	198.2	197.5	196.3	194.5	203.7	197.2	179.7	150.6	129	3
2007-11LdRC	7/16/2009	195.8	198.2	200.4	201.9	199.3	196.3	196	204.5	201.7	181.1	153.7	131.1	4
2007-11LdRC	7/17/2009	190.2	192.4	191.7	189.9	190.5	187.6	187	195	189.4	163.1	151	130.8	5
2007-11LdRC	7/18/2009	182	183.5	183.2	182.4	186.9	187.5	185.2	193.4	187.9	174.6	148.7	129.5	6
2007-11LdRC	7/19/2009	170.2	172.8	171.4	174	177	180.7	182.4	192.5	189.6	171.6	146.9	127.4	7
2007-11LdRC	7/20/2009	195.5	199.3	196.6	196.6	197.7	194.5	193.8	204.4	200.1	180.1	151.4	130.2	1
2007-11LdRC	7/21/2009	198.5	198.5	200.3	198.2	194.9	192.4	192.2	202.1	197.4	178	149.7	129.2	2
2007-11LdRC	7/22/2009	189.4	190.1	189.1	191.7	192.7	190.8	191.7	201.6	198	177	148.3	127.1	3
2007-11LdRC	7/23/2009	182.6	184.6	186.9	187	188.2	187	187	201.1	195.2	177.1	147.9	127.8	4
2007-11LdRC	7/24/2009	193.4	192.1	194.7	192.8	192.7	188.7	186.9	194.9	190.8	178.2	151	130.9	5
2007-11LdRC	7/25/2009	181.1	182.3	182.9	184.6	187.9	189	187.6	195.3	189.3	176.4	150.8	131.2	6
2007-11LdRC	7/26/2009	173.2	172.8	175.7	178.2	181.8	184.6	187.9	199.3	193.6	176.4	149.1	129	7
2007-11LdRC	7/27/2009	205.2	208.4	207.5	207.7	205.2	200.9	199.1	211.4	205.3	187.8	156.6	134.4	1
2007-11LdRC	7/28/2009	200	203.2	207.5	207	205.8	199.5	198.7	208.4	203.7	184.5	151.6	129.6	2
2007-11LdRC	7/29/2009	196.4	200.1	201.4	196.9	199.1	197.2	195	204	195.6	177.5	151.2	130.4	3
2007-11LdRC	7/30/2009	199	197.1	200.3	202.9	200.8	198.8	201.4	209.9	201.9	181.7	150.9	129.9	4
2007-11LdRC	7/31/2009	193.8	192.5	192.8	192.1	191	187	185.8	192.5	189.1	174.2	150.4	131.1	5
2007-11LdRC	8/1/2009	181.1	181.8	183.8	182.6	185.1	187.5	186.6	193.1	190.1	177.8	154.3	135.4	6
2007-11LdRC	8/2/2009	176.4	177.5	178.4	179.9	181.5	183.3	184.9	196.6	193.8	178.4	152.5	132.3	7
2007-11LdRC	8/3/2009	197.9	197.8	199.7	200.3	199	196.3	197.7	210.6	204	186.6	158.1	135.8	1
2007-11LdRC	8/4/2009	200	200.4	202.4	202.9	200.7	197.8	199.7	210.4	204.1	187.4	157.2	135.3	2
2007-11LdRC	8/5/2009	199.2	201.8	200.9	199.7	197.1	195.5	193.8	201.8	196.3	181.1	156.1	133.7	3
2007-11LdRC	8/6/2009	191.3	193.7	195.7	198.9	196.6	195.7	193.9	202	196.9	182.3	153.6	132.7	4
2007-11LdRC	8/7/2009	191.4	194.9	196.2	197.9	197.5	195.1	194.1	201.3	195	181	158.5	137.3	5
2007-11LdRC	8/8/2009	181.9	183.6	184.9	185.7	187.6	189.3	191.8	199.3	192.9	179.3	157.2	136.6	6
2007-11LdRC	8/9/2009	180	181.2	180.1	181.5	184.2	188.8	191.3	201.3	192.9	176.4	154.7	135.3	7
2007-11LdRC	8/10/2009	207.6	209.7	211.4	211.8	208.7	205.6	208	218.2	210.4	188.5	160.1	137.6	1
2007-11LdRC	8/11/2009	207.7	209.6	212.1	212.4	207.7	200.8	201.1	211.4	205.5	184.8	158	136.6	2
2007-11LdRC	8/12/2009	206.2	209	209.3	209.1	206.8	205.9	205.6	216.2	207	189.7	162.5	138.9	3
2007-11LdRC	8/13/2009	203.1	206.1	205.2	205.9	203	201.9	202.4	213.6	205.9	186.1	158	135.7	4
2007-11LdRC	8/14/2009	197.5	198.3	200.7	203.4	202.9	197.9	195.5	204	195.8	178.1	157.3	136.1	5
2007-11LdRC	8/15/2009	181.2	183.1	183.1	186.1	189.7	191.1	191.4	200	190.6	176.3	153.5	134.5	6
2007-11LdRC	8/16/2009	173.7	174.6	178.1	178.1	181.2	184.9	188.4	199.3	191.8	175.2	152.6	132.1	7
2007-11LdRC	8/17/2009	204.9	203.5	203.5	200.7	201.1	200	202.2	215.6	205.5	184.4	157.8	135.7	1
2007-11LdRC	8/18/2009	199.7	201.3	198.5	197.5	197	195.1	196.1	207.2	198.1	180.1	155.3	136.2	2
2007-11LdRC	8/19/2009	197.8	201.6	199.3	200.1	199	196.6	196.6	208.2	199.4	180.7	155.7	134.8	3
2007-11LdRC	8/20/2009	200	202.3	204.1	203.8	200.5	194.3	195.5	204.9	196.6	180.5	157.2	142.1	4
2007-11LdRC	8/21/2009	194.1	194.2	195.1	195.3	196.3	195.5	205.9	204.8	194.3	176.7	158.5	139.4	5
2007-11LdRC	8/22/2009	182	183.1	183.5	183.3	184.3	184.2	183	193.5	185.1	171.9	150.6	131.9	6
2007-11LdRC	8/23/2009	171.1	173.4	175.4	178.3	180.6	182.4	184.9	196.6	190.1	170.7	148.8	130.5	7
2007-11LdRC	8/24/2009	197.8	200.3	197.8	200.8	197.3	196.5	198.2	211.3	199	178.4	150.9	131.4	1
2007-11LdRC	8/25/2009	193.1	197	194.6	191.5	190.7	186.8	190.9	205.6	193.9	174.8	148.7	128.4	2

SetID	Date	HR13	HR14	HR15	HR16	HR17	HR18	HR19	HR20	HR21	HR22	HR23	HR24	DOW
2007-11LdRC	8/26/2009	193	195.8	197.8	197.9	195.3	194.5	196.1	206.5	195.5	176.8	151.1	131.6	3
2007-11LdRC	8/27/2009	197.1	197.9	199.2	200.1	199.3	194.3	197.9	211	199	179.5	152.6	132.8	4
2007-11LdRC	8/28/2009	196.5	197.9	199.3	202.6	200.3	195.3	193.4	205.8	195.8	181.1	159.1	138.2	5
2007-11LdRC	8/29/2009	183.9	183	186.5	187.2	188.4	186.1	187.2	192.7	183.8	169.9	150.2	133.1	6
2007-11LdRC	8/30/2009	171.3	169.4	170	171	174.3	177.9	184.3	197.7	187.5	172	147.4	128.8	7
2007-11LdRC	8/31/2009	199.8	200.8	203.5	204.5	199.8	197.1	202.6	214.4	201.8	182.3	154.7	134.6	1
2007-11LdRC	9/1/2009	199.4	201.5	202.7	201.6	195.3	191.8	198.2	210	197.4	176.5	148.1	129	2
2007-11LdRC	9/2/2009	196.8	195.7	198.2	197.5	196.6	194.4	197.9	211.3	198.4	177.7	148.9	130	3
2007-11LdRC	9/3/2009	196	200.5	199.9	198.8	196.2	195	196.8	210.2	196.6	176.2	148.8	128.2	4
2007-11LdRC	9/4/2009	195	199.6	200.8	200.5	197.6	190.9	190.4	202.1	186.1	174.1	151.5	132.8	5
2007-11LdRC	9/5/2009	179.7	178.7	182.4	183.2	184.4	182	183.2	189	179.5	165	145	128.4	6
2007-11LdRC	9/6/2009	172.4	180.9	175.8	175.7	176.3	174	184.8	196	182.8	169	148.1	130.9	7
2007-11LdRC	9/7/2009	183.2	184.1	184	183.7	186.2	188.6	192.6	207.4	193.7	173	147.4	129	1
2007-11LdRC	9/8/2009	193	198.4	195.7	195.2	194.3	189	196.2	207.9	192.1	171.2	144.7	125.9	2
2007-11LdRC	9/9/2009	191	192.3	195.5	195.9	194.3	189.4	193.3	206	197.4	169.8	144.9	126.5	3
2007-11LdRC	9/10/2009	192.1	194	196.6	197.9	195.5	189.2	194.3	206.9	193.3	173.6	145.9	126.1	4
2007-11LdRC	9/11/2009	194	194.6	196.3	199.9	197.1	191	196	201.4	187.2	173.2	149.1	134	5
2007-11LdRC	9/12/2009	186.4	186.5	187.5	187.3	188.9	186.9	189	194.6	183	169.5	149.3	131.8	6
2007-11LdRC	9/13/2009	172.6	173.7	175.4	176	179.3	179.3	186.8	199.6	185.4	167.9	144.5	126.3	7
2007-11LdRC	9/14/2009	197.5	195.7	194	191.7	189.2	186.9	194.9	204.5	189	170.4	144.3	127.3	1
2007-11LdRC	9/15/2009	196.5	195.5	199.6	198.2	195.2	192.4	201.8	211.9	196.8	177.5	148.8	129.1	2
2007-11LdRC	9/16/2009	188.9	192.3	196.3	194.1	190.6	187.7	194.1	205.4	193	162.6	147.4	127.4	3
2007-11LdRC	9/17/2009	189.9	188.6	186.8	187.3	185.1	182.4	196.5	202.7	190.9	167	144.3	126.5	4
2007-11LdRC	9/18/2009	191.4	192.6	189.2	187.9	183.3	179.5	190.6	191.3	178.6	163.6	145.3	128	5
2007-11LdRC	9/19/2009	172.7	174.3	173.1	174.5	176.5	178.3	181.4	187.9	175	157.2	140	128.1	6
2007-11LdRC	9/20/2009	164.4	165.5	165.9	166.3	169.4	171.8	181.7	187.7	173.7	157.6	138	122.4	7
2007-11LdRC	9/21/2009	183.5	186.1	186.2	185.8	185.4	182.5	194.1	201.6	186.2	165.8	140.3	123.5	1
2007-11LdRC	9/22/2009	186.2	189.4	189.9	191.4	188.7	184.6	194.9	202.2	185.1	158	140.9	124.1	2
2007-11LdRC	9/23/2009	186.9	184.3	187.2	188.3	187.1	186.1	196	199.9	182.8	163.7	141.5	124.9	3
2007-11LdRC	9/24/2009	184.4	186.1	186.1	187.1	186.6	183.2	195.9	201.1	188.7	169.9	145	127.7	4
2007-11LdRC	9/25/2009	196.3	195.5	193.4	190.7	187.5	183.7	193	194.3	181.1	166.3	146.4	129.4	5
2007-11LdRC	9/26/2009	185.2	183.6	184.8	187.6	189.6	190.1	199.6	200.8	188.3	173.5	147.4	129.6	6
2007-11LdRC	9/27/2009	178.2	180.3	181.1	179.8	182.2	184.4	196	201.5	186.2	170	143.6	126.5	7
2007-11LdRC	9/28/2009	187.5	188.6	190.1	188.4	186.5	184.8	196.5	201.6	186.1	166	142.2	124	1
2007-11LdRC	9/29/2009	183	182.6	183.2	181.6	181.6	179.1	190.7	194.7	179.4	162.6	137.3	121.4	2
2007-11LdRC	9/30/2009	184.8	184.7	185.8	184	182.5	181.3	191.3	193	179.7	163.7	140.1	122.4	3
2007-11LdRC	10/1/2009	191.6	194	191.3	187.4	182	182.8	190.7	196.3	189.6	166.4	143.9	126.8	4
2007-11LdRC	10/2/2009	187.8	191	197.3	194.6	192.9	184.1	196.7	199.2	178.1	161.8	141.7	126.6	5
2007-11LdRC	10/3/2009	182.1	183.3	179.5	180.8	179.8	180.4	190.2	190.5	176.3	160.2	141	127.6	6
2007-11LdRC	10/4/2009	176.7	177.3	175.2	177.4	178.4	178.5	193.7	194.8	180	162.3	140.4	124.4	7
2007-11LdRC	10/5/2009	191.9	194	191.4	188.3	184.9	187.4	202.8	204.1	188.7	166.7	140.9	122.5	1
2007-11LdRC	10/6/2009	186.6	191.4	191.4	189.8	183.3	181.8	200.7	204.3	186.5	165.1	141.4	124.8	2
2007-11LdRC	10/7/2009	187.7	192.6	185.2	191.1	190.4	189	204.3	205.6	188.1	168.6	142.8	124.9	3
2007-11LdRC	10/8/2009	190.7	190.8	187.1	188.7	187.2	189.6	199.6	198.4	187.1	172.6	145.5	132	4
2007-11LdRC	10/9/2009	190.5	190.2	193.9	194.9	193.1	188.3	199.3	195.6	179.2	163.9	142.5	125	5
2007-11LdRC	10/10/2009	173.7	174.8	176.6	177.4	181.4	183.8	196.5	193.9	176.2	157.8	140.3	125.8	6
2007-11LdRC	10/11/2009	167.8	168.9	170.1	172	176.9	181.5	187.7	188.1	182.4	174.6	139.1	122.5	7
2007-11LdRC	10/12/2009	189.8	191.1	193.6	192.9	190.5	192.8	204.1	201.4	189.8	169.3	140.9	123.8	1
2007-11LdRC	10/13/2009	192.9	196.3	197	196.7	194	193.3	210.3	204.9	189.3	168.4	142.5	123.8	2
2007-11LdRC	10/14/2009	188.4	187.2	188.4	188.3	188.3	188	206	203.3	184.9	166.7	140	123.2	3
2007-11LdRC	10/15/2009	185.7	187.7	187.7	188.7	187.1	186.9	204.6	201.1	184.3	166.1	141	123	4
2007-11LdRC	10/16/2009	186	188.4	190.7	192.3	190.4	183.6	196.7	191.1	175.9	160.7	141.6	124.6	5
2007-11LdRC	10/17/2009	170.4	172.2	173.5	175.2	178.8	178.5	192.5	186.8	173	157.2	139.5	124.4	6
2007-11LdRC	10/18/2009	167.2	173.5	181.2	183.4	185.3	190.4	208.3	203.1	185.9	165.8	143.4	125.5	7
2007-11LdRC	10/19/2009	200.1	202.2	203.6	203.9	199.3	193.7	214.5	214	192.8	169.5	143.6	125.3	1
2007-11LdRC	10/20/2009	190.8	190.2	189.3	188.3	189.6	192.5	208.8	204.8	186.2	165	140.3	122.2	2
2007-11LdRC	10/21/2009	195.1	191.1	190.2	189.3	189.9	190.4	214.7	210	191.4	170.1	143.8	124.8	3
2007-11LdRC	10/22/2009	198.7	202	205.2	206.2	202	191.7	210.2	216.2	200.3	172.2	145.1	127.7	4
2007-11LdRC	10/23/2009	194.5	197.3	199.3	199	195.9	192.9	205.7	196.7	182	166.3	145.1	127.9	5
2007-11LdRC	10/24/2009	177.3	178.1	179	179	181.2	184.7	198.8	184.3	174.8	159.3	141.2	123.4	6
2007-11LdRC	10/25/2009	160.2	157.7	157.7	160.9	166.3	176.7	195.6	188.6	172.6	155.2	134.1	118.6	7
2007-11LdRC	10/26/2009	187.5	189.5	189	188.1	184.4	187.2	211	205.2	186.2	164.6	138.6	120.8	1
2007-11LdRC	10/27/2009	185.5	188	190.4	193.7	193.3	191.3	211.5	201.5	186.8	166.4	139.1	120.3	2
2007-11LdRC	10/28/2009	186	191	196.3	196.2	194.5	190.7	210.8	203.6	185.5	165	139.1	121.5	3
2007-11LdRC	10/29/2009	183.3	181.2	188.6	190.4	189.8	189	210.2	202.5	184.3	165.3	142.4	123.7	4
2007-11LdRC	10/30/2009	186.5	188.9	186.3	188.9	182.4	196.2	190.4	184.3	170.3	159	141.7	130.2	5
2007-11LdRC	10/31/2009	166.2	165.5	172.6	166.8	169.5	187.2	194.8	175.3	161.4	152.7	137.1	126.7	6
2007-11LdRC	11/1/2009	165.8	166.8	167	168.4	174.5	188.3	199.2	184.5	167.8	160.6	141.8	130.7	7
2007-11LdRC	11/2/2009	190.5	195.3	193.3	195.5	192.5	189.1	185	177.6	168.4	160.6	145.6	133.4	1
2007-11LdRC	11/3/2009	189.6	189.6	189.4	189	187.5	191	211.3	202.5	185.4	165.5	141.3	129.2	2
2007-11LdRC	11/4/2009	185.4	187.3	186.8	188.9	188.3	188.9	208.2	199.9	184.8	166.1	142.1	123.7	3
2007-11LdRC	11/5/2009	182.9	185.1	185	182.7	182.8	185.6	205.9	196.9	182.4	164.8	142.8	123.3	4
2007-11LdRC	11/6/2009	182.3	184	185.5	186.4	184.3	184.3	199.7	190.4	177.7	163.1	144.6	127	5
2007-11LdRC	11/7/2009	170.5	169.1	169	170.2	172.5	178.9	192.8	183.3	170	157.6	141.5	125.4	6
2007-11LdRC	11/8/2009	167.2	167.5	166.9	167.5	168.6	175.1	193.6	186.8	174.1	158.4	139.1	120.9	7
2007-11LdRC	11/9/2009	181.5	182.1	182.3	182.6	182.1	184.4	205.9	198.6	183.3	164.9	142.1	124.6	1
2007-11LdRC	11/10/2009	184.9	185.1	182.8	183.8	184.9	190.9	209.6	200.3	184.5	166.3	143	123.2	2
2007-11LdRC	11/11/2009	182.1	181.5	182.7	183.3	182.3	185	203.7	196.4	179.5	164.1	142	124.1	3
2007-11LdRC	11/12/2009	179.2	179.5	180.5	181	180.2	182.9	199.3	190.5	176.6	162.8	140.6	122.5	4

SetID	Date	HR13	HR14	HR15	HR16	HR17	HR18	HR19	HR20	HR21	HR22	HR23	HR24	DOW
2007-11LdRC	11/13/2009	174.2	172.8	173.4	176.7	179.4	182.8	197.8	187.4	176.5	162.4	141.7	124	5
2007-11LdRC	11/14/2009	166.8	171.4	168.6	172.2	176.1	180.9	195.2	186.4	174.6	159.2	129.8	123.4	6
2007-11LdRC	11/15/2009	166.1	167.7	168.3	169	172.2	181.9	196.9	187.1	172.9	153.2	133.6	120	7
2007-11LdRC	11/16/2009	179.8	180.5	182.1	181.9	181.7	192.3	199.6	196.8	186.9	170.5	145.3	120.8	1
2007-11LdRC	11/17/2009	188.4	187.1	187.3	184.5	183.3	184.9	205.2	198.1	181.5	164.5	141.2	122	2
2007-11LdRC	11/18/2009	177.8	175.8	180.2	181.8	179.6	183.7	204.1	195.6	179.2	165.4	139.1	121.6	3
2007-11LdRC	11/19/2009	178.7	178.3	181.3	179.8	178.8	183.3	201.6	190.4	178.1	164.1	140.9	119.2	4
2007-11LdRC	11/20/2009	175.2	174.1	175.4	176.3	174.7	180.1	193.2	185.1	177	162.9	142.7	124.4	5
2007-11LdRC	11/21/2009	170.7	165.3	170.1	175.1	175.7	182.4	189	186.3	175.2	161.7	141.4	130.6	6
2007-11LdRC	11/22/2009	168	167.3	169.8	174.2	176.4	182.4	201.6	194.7	176.9	160.1	139	122.5	7
2007-11LdRC	11/23/2009	189.1	186	187.3	186	188.4	193.7	215.2	208.2	192.5	172.7	147.3	128.1	1
2007-11LdRC	11/24/2009	188.4	187.1	187.3	184.5	183.3	184.9	205.2	198.1	181.5	164.5	141.2	122	2
2007-11LdRC	11/25/2009	177.8	175.8	180.2	181.8	179.6	183.7	204.1	195.6	179.2	165.4	139.1	121.6	3
2007-11LdRC	11/26/2009	184.4	184.2	181.1	181.7	178.3	175.5	178.1	172.2	162.9	152.4	138.6	122.3	4
2007-11LdRC	11/27/2009	179.8	180	182.3	183.7	181.8	196	200	183.4	167.5	155.6	138.3	127.5	5
2007-11LdRC	11/28/2009	172.1	171.5	169.9	175.4	175.7	196.4	196.1	180.4	171.1	157.2	140	130.6	6
2007-11LdRC	11/29/2009	161.2	159.4	157.6	159.6	163.9	188.8	193.3	178.3	160	148.6	134.9	122.9	7
2007-11LdRC	11/30/2009	177.5	180.9	178.1	176.1	187.6	183.7	203.9	195.6	180.5	158.8	138	125.8	1
2007-11LdRC	12/1/2009	179.2	180.6	172.4	175.9	175	181.9	201.9	195.6	175.7	156.6	132.1	115.8	2
2007-11LdRC	12/2/2009	175	178.3	181.4	181.9	180.5	186.9	206.7	198.3	179.3	155	135.9	119.1	3
2007-11LdRC	12/3/2009	180	178.1	180.4	180.8	180.1	185.4	206.1	199.3	181.7	162.8	137.9	119.6	4
2007-11LdRC	12/4/2009	175.9	178.4	180.5	182.1	180.8	184.3	200.6	191.3	175.6	162.8	142.2	121.1	5
2007-11LdRC	12/5/2009	164.6	166.8	167	167.7	168.9	175.8	191	183.3	170.7	157.7	137.8	121.7	6
2007-11LdRC	12/6/2009	158.4	155.9	156.6	159.1	163.5	177.6	197.3	191.3	166.4	148.5	132.4	113.4	7
2007-11LdRC	12/7/2009	173.9	175.4	174.5	172.7	171.4	178.5	201.6	192.8	177.5	159.3	137.1	115.9	1
2007-11LdRC	12/8/2009	170.6	170.5	170.4	169.9	169.2	173.5	193.5	187.7	172.4	156.1	133.9	117.7	2
2007-11LdRC	12/9/2009	163	166.3	166.3	164.1	165.5	176.3	189.2	188.4	173.4	155.6	135.9	118.1	3
2007-11LdRC	12/10/2009	169.5	172.9	172.6	173	172.7	178.4	194.1	193.5	178.3	161	137.4	120.6	4
2007-11LdRC	12/11/2009	171.5	170.5	171.9	173	173.5	178.3	194.5	183.9	169.9	156.4	139.4	121.3	5
2007-11LdRC	12/12/2009	159.3	157.2	157.9	159.1	162.6	169.6	185.7	176.6	167.9	153.3	136.2	119.3	6
2007-11LdRC	12/13/2009	153.8	153.1	154.1	156.8	160.4	170.7	193.1	188.4	173.3	153.2	132.5	115.7	7
2007-11LdRC	12/14/2009	166.8	167.3	168.2	168.4	169.1	174	198	192.7	175.4	155.8	133.5	118.7	1
2007-11LdRC	12/15/2009	165.7	163.8	157.2	163.5	164.4	168.2	192.3	182.6	172.9	151.4	132.3	115.4	2
2007-11LdRC	12/16/2009	162.9	164.6	167.3	166.8	166.5	172.5	192.5	186.9	173.1	156.2	134.5	116.2	3
2007-11LdRC	12/17/2009	163	162.9	164.3	165.8	166.4	172.2	193.5	187	174.3	159.4	135.7	117.5	4
2007-11LdRC	12/18/2009	164.6	165.2	165.2	165.2	166.2	171.2	177.9	176.7	169.2	152	128.6	118.1	5
2007-11LdRC	12/19/2009	156.5	152.8	153.8	155.3	158.6	165.5	183.9	178.3	164.8	153	133.5	118.8	6
2007-11LdRC	12/20/2009	148.8	148.2	150.9	152.1	157.6	170.6	193.9	191.8	180.8	164.9	141.5	122.5	7
2007-11LdRC	12/21/2009	170.2	171	172.9	172.5	171.7	184.5	193.7	191.4	183.1	169.4	139.9	117.6	1
2007-11LdRC	12/22/2009	173.3	173.3	175.3	175.6	178.1	185	209.8	202.5	187	171.4	142.5	121.9	2
2007-11LdRC	12/23/2009	175.7	175.7	178.4	179.4	180.4	187	209.1	202.6	187	170.9	143.3	123.6	3
2007-11LdRC	12/24/2009	176.3	178.5	177.2	175.6	177.4	186.2	208	201.9	186.5	170.4	148.8	121.2	4
2007-11LdRC	12/25/2009	143.8	143.4	145.7	148.8	152.5	160.6	174.1	170.5	159.9	149.5	133.3	118.1	5
2007-11LdRC	12/26/2009	159	159.4	158.7	162.6	169.2	174.8	189	175.4	161.9	153.7	138.4	123.4	6
2007-11LdRC	12/27/2009	143.8	143.4	145.7	148.8	152.5	160.6	174.1	170.5	159.9	149.5	133.3	118.1	7
2007-11LdRC	12/28/2009	161.4	159.9	161	163.5	167.7	178.3	204.4	203.8	186.9	167.4	142.4	123.2	1
2007-11LdRC	12/29/2009	177.5	175.9	174.8	174.9	178	185.4	214	211.6	190.6	169.7	145.6	125.3	2
2007-11LdRC	12/30/2009	181.3	181.8	179.6	183.4	190.2	201.3	215.4	206.1	187.3	172.6	150.3	132.3	3
2007-11LdRC	12/31/2009	179.6	181.2	184.9	188.4	188.8	201	216	205.7	183.8	171.2	151.2	135.4	4

SetID	Date	HR13	HR14	HR15	HR16	HR17	HR18	HR19	HR20	HR21	HR22	HR23	HR24	DOW
Based on Hour Ending		13	14	15	16	17	18	19	20	21	22	23	24	
Total MW by Hour		65,007	65,184	65,389	65,695	65,914	66,551	69,731	70,796	66,765	60,653	52,181	45,307	
Total Obs by Hour		365	365	365	365	365	365	365	365	365	365	365	365	
Off Peak Hrs MW											60,653	52,181	45,307	
Total Off Peak Obs by Hour											365	365	365	
Mid Peak Hrs MW		65,007	65,184	65,389	65,695	65,914	18,395	19,214	19,467	18,404				
Mid Peak Obs by Hour		365	365	365	365	365	104	104	104	104				
Priority Peak Hrs MW							48,156	50,517	51,329	48,360				
Priority Peak Obs by Hour							261	261	261	261				
Total MW Check		0.00	0.00	0.00	0.00	0.00	0.00	0.00	0.00	0.00	0.00	0.00	0.00	
Total Obs Check		0	0	0	0	0	0	0	0	0	0	0	0	

Total Avg. MW
Off Peak Avg. MW
Mid Peak Avg. MW
Priority Peak Avg. MW

SettID	Date	HR1	HR2	HR3	HR4	HR5	HR6	HR7	HR8	HR9	HR10	HR11	HR12
2007-11LdRC	1/1/2010	131.8	124.5	115.6	111.6	109.2	114.4	118.8	127.5	145.2	166.7	181.4	181.3
2007-11LdRC	1/2/2010	131.8	124.5	115.6	111.6	109.2	114.4	118.8	127.5	145.2	166.7	181.4	181.3
2007-11LdRC	1/3/2010	113.3	105.7	101.8	100.9	105.4	110.5	119	132.6	152	170.2	179.4	176.8
2007-11LdRC	1/4/2010	106	101.1	98.7	99.6	103.2	114.2	135	150.3	164.6	178.5	180.1	177.9
2007-11LdRC	1/5/2010	107	100.9	96.7	97.4	101.2	116.6	133.2	146.9	159.7	169.6	172.9	173.3
2007-11LdRC	1/6/2010	105.9	101.8	98.8	97.8	100.4	112.7	131.8	146.6	158.6	168.5	173	172.5
2007-11LdRC	1/7/2010	109.7	102.3	98.6	99.2	102.9	115	134.5	148.1	161.9	175.6	178.5	178.1
2007-11LdRC	1/8/2010	109	103.1	100	99.6	102.3	114.7	136	150	163.4	174.3	175.8	175.6
2007-11LdRC	1/9/2010	111.1	103.8	99.7	98.4	101.6	108.3	116.5	134.6	152.9	164.4	167.7	166.3
2007-11LdRC	1/10/2010	111.7	105.2	103.3	102.1	104.5	108.7	113.6	125.3	145.3	158.9	166.8	167.4
2007-11LdRC	1/11/2010	104.2	99.3	97.5	96.5	101	106	134.7	149.2	161.6	171.7	173.2	171.6
2007-11LdRC	1/12/2010	105.3	100.1	97.5	97.5	101.6	113.1	134.7	147.1	159.7	168.9	172.7	172.6
2007-11LdRC	1/13/2010	102.3	97.5	95.4	95.5	99.3	111.3	132.5	145.1	154.1	165.8	168.1	166.9
2007-11LdRC	1/14/2010	104.2	99	96.2	97.1	100.5	114.9	138	151.5	163.5	173.6	174.4	173.2
2007-11LdRC	1/15/2010	108.2	103.1	101.4	102.3	106.6	119.4	140.8	157.1	166	178.7	180.4	178.9
2007-11LdRC	1/16/2010	113.9	108.4	107.3	106.1	109.8	116.6	124.2	139.7	161.4	174	174.4	175
2007-11LdRC	1/17/2010	115.8	109.3	107.2	106.8	107.9	113.6	124.7	138.8	156.8	170.2	175.6	175.3
2007-11LdRC	1/18/2010	118.4	113.5	108.4	108.6	111.9	121.8	136.6	157.7	173.9	188.1	191.2	188.4
2007-11LdRC	1/19/2010	114.7	109.9	106.8	106.5	109.9	121.4	145.7	161.4	173.6	184.2	184.9	183
2007-11LdRC	1/20/2010	108.5	102.1	99.5	99.3	104.5	117.1	140.4	155.2	166.8	180.6	181.5	181.8
2007-11LdRC	1/21/2010	107.3	104.6	101.7	100.6	105.3	117.7	142.7	157.2	169.6	181.2	180.4	181.6
2007-11LdRC	1/22/2010	109.4	105	102.1	100.6	105.7	116.3	135.7	154.4	171.2	183.7	188.1	185.6
2007-11LdRC	1/23/2010	108.5	100.9	98	97.5	100.9	106.2	116.1	130.6	148.9	161.1	162.8	162.8
2007-11LdRC	1/24/2010	105.5	100	97.6	96.7	99.2	105.5	114.8	127.3	146.4	159	164.4	165.5
2007-11LdRC	1/25/2010	108.6	101.1	99.7	100.2	103.9	115.4	139.5	152.2	166.9	179.7	184.5	183.9
2007-11LdRC	1/26/2010	109.9	104.5	100.9	100.5	103.6	118	140.6	152	166.9	180.8	186.5	183
2007-11LdRC	1/27/2010	108.2	102.4	99.9	98.6	102.9	113.8	138.8	151	165.5	178.3	183.9	183.8
2007-11LdRC	1/28/2010	110.6	104.4	101.9	100.9	105.5	117.2	140	154	168.5	176.5	178.8	172.7
2007-11LdRC	1/29/2010	111.5	105.3	100.9	100.6	103.2	114	137.5	150.9	164.8	178.7	182.1	182.5
2007-11LdRC	1/30/2010	110	104.4	101.4	100.2	102.3	108.8	118.5	133.4	150.5	165.2	168.7	169.1
2007-11LdRC	1/31/2010	108.6	102.9	99.9	98.6	100.3	106.8	144.2	163.8	172	180.3	166	169.4
2007-11LdRC	2/1/2010	108.5	103.5	100.4	102	105	115.7	139	152.6	166.3	177.8	181.9	182.9
2007-11LdRC	2/2/2010	112	106.4	101.9	101.4	105.1	114.6	138.2	153.5	165.5	172.4	174.2	172.7
2007-11LdRC	2/3/2010	104.7	101	98.2	97.3	102.5	113.9	137.7	152.3	163.2	171.5	173.7	172.1
2007-11LdRC	2/4/2010	104.6	99.4	96.5	97	101.8	113.7	136.3	150.4	160.9	169.3	171.8	169.3
2007-11LdRC	2/5/2010	104	100.3	98.3	97.9	101.6	113	137.3	152.8	164.5	174.2	176.2	174.8
2007-11LdRC	2/6/2010	108	103.2	99.4	99.5	102.5	108.6	120.6	136.6	157	170.2	172.1	172.4
2007-11LdRC	2/7/2010	110.2	104.1	101.2	99.9	100.3	107.4	115.2	128.8	148.9	161.5	170.3	174.3
2007-11LdRC	2/8/2010	110	104.9	102.2	101	104.5	116.1	139	154.1	170.2	182.8	187.1	189.3
2007-11LdRC	2/9/2010	112.1	106.8	104.6	103	106.2	116.8	137.8	155.5	171	179.2	182.8	183.4
2007-11LdRC	2/10/2010	110.1	106.4	103.6	102.3	105.2	116.3	139.7	156.1	165.6	175.4	178.3	182.3
2007-11LdRC	2/11/2010	107.1	105.1	103.2	102.7	106.2	116.2	138.2	154.4	168.2	180.3	183.1	180
2007-11LdRC	2/12/2010	109.7	105	101.6	100.5	102.8	114.1	136.3	151.1	165.3	174.6	175.6	178.2
2007-11LdRC	2/13/2010	108.9	103.3	99.5	98.4	100.4	106.8	117.4	132.4	146.1	163.7	165.8	163.9
2007-11LdRC	2/14/2010	108.5	102.2	98.9	97.1	99.7	105	114.2	129	146.1	156.7	159.2	157.7
2007-11LdRC	2/15/2010	103.3	99.7	97.2	97.7	100.5	110.9	133.1	139.1	160.4	169.3	171.2	169
2007-11LdRC	2/16/2010	104.3	99.7	96.9	96.3	100.5	112.3	133.4	150.2	163.9	173.7	172.5	169.5
2007-11LdRC	2/17/2010	108.6	101.4	98.1	97.7	100.6	111.6	134.4	149.4	160.5	170.4	172.1	172.7
2007-11LdRC	2/18/2010	106.6	102.5	99.8	97.5	101.2	112.3	137.9	149.9	163.4	171.5	175.7	175.7
2007-11LdRC	2/19/2010	106.9	103.3	100.7	99.4	103.4	113.1	136.1	150.8	163.6	172.7	175.3	174.7
2007-11LdRC	2/20/2010	110.1	104.8	101.6	99.7	101.5	106.9	118.6	134.7	153	164.2	166	163.2
2007-11LdRC	2/21/2010	106.1	101.3	98.9	97.7	100.1	105.5	113.9	127.6	144.9	155.5	158.3	157.2
2007-11LdRC	2/22/2010	106.4	100.8	98	96.9	99.4	107.6	120.3	133.2	150.8	164.9	167.9	165
2007-11LdRC	2/23/2010	105.6	100.4	98.3	96.7	101.2	111.6	132.6	146	159.9	171	173.5	172.4
2007-11LdRC	2/24/2010	108.6	103	99.9	99	102.8	113.8	135.6	149.7	164.3	175.9	179.4	177.2
2007-11LdRC	2/25/2010	108.7	103.6	100.8	100.3	103.7	116	140.1	151.1	168	175.1	181.3	180.4
2007-11LdRC	2/26/2010	109.7	104.2	100.9	100.2	103	115.2	137.9	151.3	168.5	179.3	181.4	180.7
2007-11LdRC	2/27/2010	109.5	104.6	100.7	98.8	101.3	107.1	120.6	134	154.1	167.2	173	168
2007-11LdRC	2/28/2010	109.4	104.5	100.4	99	101.9	107.5	116.3	130.9	148.5	159.7	165.7	166.2
2007-11LdRC	3/1/2010	104.8	102.3	99.4	98.3	101.2	113.6	141.4	152.8	171.2	173.4	176.3	175.5
2007-11LdRC	3/2/2010	105.8	101.2	98.2	97.8	98.4	112.5	140.1	152.8	161.4	172.5	172.3	173.9
2007-11LdRC	3/3/2010	106.7	100.2	97	97.2	101.1	112.8	137.4	149.1	162.7	173.6	173	172.1
2007-11LdRC	3/4/2010	107.4	100.5	99.3	97.7	100.7	115.1	136.2	151.7	164.4	171.5	175.2	176.3
2007-11LdRC	3/5/2010	111.1	103.1	98.2	97.9	100.1	113.8	137.5	151.2	163.5	173.6	175.1	176
2007-11LdRC	3/6/2010	111	104.5	101	99.8	102.5	110.9	123.1	139.6	159.5	171.6	173.5	172.4
2007-11LdRC	3/7/2010	112.5	106.2	102.3	99.8	101.1	107.9	116.5	130.5	151.4	163.2	165.3	165.2
2007-11LdRC	3/8/2010	108.6	103.2	99.9	97.5	102.8	115.9	140	155.5	170.6	181	182.4	182.5
2007-11LdRC	3/9/2010	114.8	108.3	104.6	102.8	106.6	119.2	144.2	161.9	178.6	189	192.7	192.4
2007-11LdRC	3/10/2010	121.2	115.2	109.9	108.3	110.6	123	149.1	165.2	177.4	183.9	184.5	184.2
2007-11LdRC	3/11/2010	109.9	103.5	99.6	98.7	103.2	115.6	140.4	156.6	166.4	174.3	172.2	170.2
2007-11LdRC	3/12/2010	104	98	95.3	94.5	98.8	112	137.5	151.8	163.1	168.8	170.7	170.3
2007-11LdRC	3/13/2010	107.1	101.2	99.8	97.1	100.1	106.7	117.9	135.4	153.9	166.5	169	169.2
2007-11LdRC	3/14/2010	102.5	97.7	92.4	92.5	95.5	102.5	110.9	134.5	147	155.1	155.7	155.2
2007-11LdRC	3/15/2010	102	94	93	92.1	96.6	110.5	134.7	147.3	158.9	163.3	169.2	161.6
2007-11LdRC	3/16/2010	100.4	95.4	93	92.7	97.7	111.6	136	150.2	160.5	167.1	167.7	164.8
2007-11LdRC	3/17/2010	97.6	94	90.9	90.3	95.5	108.4	131.4	146.3	154	162	160.8	159.1
2007-11LdRC	3/18/2010	100.9	97.3	93.1	93.5	97.3	111.6	134	147.9	157.2	166.1	168.5	168.6
2007-11LdRC	3/19/2010	103.6	98.5	95	93.8	98.6	110.4	133.4	146.7	160.3	170.2	171.1	169.5
2007-11LdRC	3/20/2010	107.6	102.4	98.3	97.5	99	106.5	117.9	135.7	154.7	166.2	165.4	164.8

SetID	Date	HR1	HR2	HR3	HR4	HR5	HR6	HR7	HR8	HR9	HR10	HR11	HR12
2007-11LdRC	3/21/2010	108.2	101	97.7	97.4	100.5	106.3	117.7	133.6	151.7	161.7	163.7	162.2
2007-11LdRC	3/22/2010	106.4	102.2	96	97.6	101.1	112.9	131.3	148.5	167.6	177	179.1	178.1
2007-11LdRC	3/23/2010	111.1	104.9	100.8	99	102.4	114.9	132.3	149.8	169.4	180.8	183.6	182.1
2007-11LdRC	3/24/2010	114	108	103.6	102.6	106.7	116.4	133.3	150.3	170.7	181.8	185.6	186.9
2007-11LdRC	3/25/2010	119.7	113.4	109.5	107.2	109.3	119.4	135.2	152.6	173.2	189	193.4	192.6
2007-11LdRC	3/26/2010	118.6	110.4	107.4	105.3	102.6	117.1	132.8	150	171.1	184.6	190	189.4
2007-11LdRC	3/27/2010	116.3	110.2	106.8	105.6	107.7	112.6	119.1	138.3	155.7	169.5	170.2	169.1
2007-11LdRC	3/28/2010	107.6	101.3	98.8	97.2	99.5	106.6	115.3	132.3	151.3	160.4	162.3	160.3
2007-11LdRC	3/29/2010	107.5	100.4	95.4	97	102.3	113.4	134.5	151.2	166.7	175.4	177.3	178.1
2007-11LdRC	3/30/2010	111	103.9	99	101.4	105.6	117.1	141.4	156.5	171.6	181.7	182.8	180.8
2007-11LdRC	3/31/2010	112.6	105.5	102.1	100.3	106	117.2	139.3	157.9	173.3	180.8	181.6	184.6
2007-11LdRC	4/1/2010	108.6	105.1	102.5	101.1	105.5	114.9	139.3	150.4	167.9	175.9	180.2	177.8
2007-11LdRC	4/2/2010	109.1	105.1	101.8	101.2	104	115.3	132.5	147.1	169.8	176.5	177.9	176.5
2007-11LdRC	4/3/2010	106.3	103.5	101.8	100.7	105.4	112.5	116	140.9	157.2	168.9	167.8	166.4
2007-11LdRC	4/4/2010	107.1	103.5	101.1	100.2	103.1	108.1	115.3	135.2	152.6	160	160.8	160.8
2007-11LdRC	4/5/2010	105.9	100.7	100.6	99.9	105.4	121.5	132.7	152.7	163.3	172.9	173.7	173
2007-11LdRC	4/6/2010	106.7	103.1	101.1	100.7	103.8	119.7	128.3	149.1	159.1	170.1	175.1	175.9
2007-11LdRC	4/7/2010	105.3	102.9	100.9	101.2	106.7	121.2	137.7	154.9	171.5	176.5	175.4	174.8
2007-11LdRC	4/8/2010	108	106.3	103.2	102.5	107.7	122.9	131.4	149.2	164.1	169.5	174.8	175.9
2007-11LdRC	4/9/2010	108.4	106.6	103.2	103.1	108.4	120.2	137.4	160	176.6	181.2	184.8	183.1
2007-11LdRC	4/10/2010	114.1	110	106.7	105.6	105.7	111.7	129	145.1	160.4	169	168.8	169.5
2007-11LdRC	4/11/2010	112	105.9	103.8	102.9	104.9	108	117.6	139.6	153.8	158.9	164.1	164.3
2007-11LdRC	4/12/2010	109.6	105.4	105.2	103.1	107.1	117.9	142.3	156.7	175.4	182.9	185.1	186
2007-11LdRC	4/13/2010	111.7	107.7	104.1	104.5	107.2	119.9	133.7	162.2	176.3	184	183.1	183.6
2007-11LdRC	4/14/2010	111.3	107.1	104.7	104	106.7	117.6	136.7	154.1	167.9	178.1	182	183.7
2007-11LdRC	4/15/2010	110.8	107.1	104.3	102.5	105.1	115.7	136.1	150.7	167.9	180.3	185.5	185.7
2007-11LdRC	4/16/2010	113.4	109.3	106	104.7	107	116.3	137.5	155	169.1	179.6	182.9	182.9
2007-11LdRC	4/17/2010	115.6	109.5	105.6	103.9	105.1	110	121.2	139.6	156.9	169.6	174.8	174.6
2007-11LdRC	4/18/2010	114.6	108.9	105.7	104.1	105.2	110.6	118.2	133.8	151.3	162.2	166.4	167.9
2007-11LdRC	4/19/2010	110.9	108.3	104.7	104.3	108.6	125.9	135.1	153.7	167.5	177.4	182	183.9
2007-11LdRC	4/20/2010	106.4	105.6	103.5	102.4	109.4	123.1	132.1	148	160.3	174.2	179.9	180.9
2007-11LdRC	4/21/2010	107.7	105.1	103.2	102.5	107.3	114.3	133.7	149.9	165.2	172.8	177.7	179.2
2007-11LdRC	4/22/2010	109.6	105.3	103.7	102.1	104.6	114.1	133.8	148.2	163	172.5	176.8	178.3
2007-11LdRC	4/23/2010	111.3	107	104.7	102.5	105.3	113.8	132.8	148.9	163.8	177.3	175.7	176.9
2007-11LdRC	4/24/2010	112.1	105.6	103.2	102.4	103.8	108.7	118.2	139.5	149.5	161.2	165.2	165
2007-11LdRC	4/25/2010	110.5	105.6	102.5	101.2	102.7	107.6	115.2	126.5	140.9	151.9	158.3	159.7
2007-11LdRC	4/26/2010	109	104.4	101.9	102.4	105.7	114.9	127.2	148.1	161.8	172.3	175.5	177.3
2007-11LdRC	4/27/2010	108.6	103.3	101.1	101.5	104.8	115.3	132.7	148.9	162.8	173.8	177.8	176.9
2007-11LdRC	4/28/2010	108	104.4	102.9	103.1	105.4	115.4	133.5	150	162.6	173.8	178.5	181.3
2007-11LdRC	4/29/2010	113.7	107.8	105.1	102.9	106.3	115.5	141.5	151.4	166.4	173.8	173.7	172.4
2007-11LdRC	4/30/2010	111.1	105.9	103.5	102.1	105.5	115.3	135.3	151.5	168.1	176.3	176.9	179.9
2007-11LdRC	5/1/2010	111.5	106.8	103.4	102.8	104.5	109.1	116.8	132	149	160.6	162.8	163.1
2007-11LdRC	5/2/2010	110.7	106.2	103.8	102.6	103.2	107.1	113.2	126.5	142.5	153	157.2	158.3
2007-11LdRC	5/3/2010	109.3	105.1	103	102.3	104.2	112.8	129.6	146.8	162.9	175.5	180.2	181
2007-11LdRC	5/4/2010	111.5	106.7	104.3	103.9	106.3	115.3	132.6	147.7	163.9	174.8	181.3	184.5
2007-11LdRC	5/5/2010	112.7	108.3	105.8	105.6	108.2	117.2	133.7	148.7	167	179.1	184.5	187.9
2007-11LdRC	5/6/2010	113.2	109.1	106.9	106.5	108.8	117.5	133.7	149.8	168.2	180.8	184.4	185.8
2007-11LdRC	5/7/2010	115.4	110.1	107.8	107.2	109.1	118.1	134	152.6	170.3	179.8	186.5	188.9
2007-11LdRC	5/8/2010	115.8	111	108.1	107.5	108.3	113.2	121.5	138	156.5	167.6	172.4	171.2
2007-11LdRC	5/9/2010	114.2	108.6	106.1	104.9	107.4	110.9	116.2	130.7	146.6	157.5	161.8	162.4
2007-11LdRC	5/10/2010	113	109.6	106.8	106.7	108.1	117.6	134	150.7	168	181	188	190
2007-11LdRC	5/11/2010	111.6	107	104	104.6	107.2	116.7	134.6	149.8	167.9	178	181.6	184.4
2007-11LdRC	5/12/2010	110.7	107.1	105	104.1	105.8	115.1	123.4	149.1	165.7	176.1	182.1	187.2
2007-11LdRC	5/13/2010	113.7	109.6	106.5	106.1	107.6	116.7	134.3	152.8	170.2	178.2	181.6	185.2
2007-11LdRC	5/14/2010	113	109.9	107.6	107.4	109.9	118.4	135.1	149.8	166.5	177.8	181.6	184.8
2007-11LdRC	5/15/2010	118.8	109.7	102.5	106.9	110.5	115.9	122	136.9	152.8	164.1	169	169.9
2007-11LdRC	5/16/2010	111.6	109.8	107.3	106.7	108.4	114.1	118	131.3	145.2	156	162.6	165.6
2007-11LdRC	5/17/2010	111.9	109.6	106.9	107.1	112.8	123.6	136	151.6	168.2	180.6	186.9	189
2007-11LdRC	5/18/2010	113.5	108.8	107	106.5	109.1	117.6	135.3	151.8	169	179.5	183.7	187.5
2007-11LdRC	5/19/2010	115	110	108.1	107.2	109.7	118.6	137.4	153.4	167.9	179.8	186.6	188.9
2007-11LdRC	5/20/2010	115.6	112	109.4	108.9	110.4	118.4	136.6	154	169.8	177.5	181.4	181.3
2007-11LdRC	5/21/2010	111.3	108.1	106.2	104.7	106.9	116.9	136.2	152.9	168.1	177.5	183.7	181.4
2007-11LdRC	5/22/2010	114.6	110.4	108.1	106.9	107.6	113.4	120.2	139.8	152	160.1	168.2	172.9
2007-11LdRC	5/23/2010	115.5	110.7	107.6	106.2	107.8	111.3	118.1	130.7	143	154.8	161.8	167.1
2007-11LdRC	5/24/2010	113.7	109.3	107.3	107.5	109.4	117.2	136.9	156.5	176.5	188.5	193.8	194.8
2007-11LdRC	5/25/2010	115.1	110.7	108.5	109.2	109.8	119.7	136.9	157.2	175.6	186.3	190.5	191.2
2007-11LdRC	5/26/2010	113.9	110.1	106.8	107.1	108.8	118.3	136.1	153.7	172.5	184.2	188.8	191.3
2007-11LdRC	5/27/2010	113.8	109.3	107.6	106.7	108.4	117.7	136	155.3	173.3	184.6	189.8	190.2
2007-11LdRC	5/28/2010	115.4	110.8	108.8	108.8	108.7	117.2	134.8	150.8	170.2	178.6	187	188.2
2007-11LdRC	5/29/2010	118.1	111.1	108.4	106.7	107.9	114.1	122.6	136.7	150.8	160.2	168	172.7
2007-11LdRC	5/30/2010	115.5	110.7	107.6	106.2	107.8	111.3	118.1	130.7	143	154.8	161.8	167.1
2007-11LdRC	5/31/2010	114.5	109.6	107	106	107.5	110.9	118.9	131.3	144.9	156.5	163.9	168.1
2007-11LdRC	6/1/2010	118.5	114.8	110.6	107.9	111	121.2	142.1	155.9	177.6	188.3	192.8	195.7
2007-11LdRC	6/2/2010	122.5	116	112.5	111.5	112.8	124	142.6	161.9	177.4	188.5	191.2	194
2007-11LdRC	6/3/2010	121.8	115.8	112.3	110.1	112.9	123.6	141.2	160.4	177	187.4	190.5	194.8
2007-11LdRC	6/4/2010	121.8	115.5	112.5	111.4	114.3	126.2	144.3	163	181.6	189.3	193.9	195.5
2007-11LdRC	6/5/2010	126.9	118.6	113.9	112.6	113.1	117.7	127.7	146.8	167.5	178.6	184.6	184.3
2007-11LdRC	6/6/2010	123	117.1	112.4	110.5	111	116.8	124.8	140.4	156.7	169.3	174.4	176.4
2007-11LdRC	6/7/2010	120.5	114.3	111.4	109.5	112.2	123.2	140.9	160.1	176.1	189.2	191.4	192.3

SetID	Date	HR1	HR2	HR3	HR4	HR5	HR6	HR7	HR8	HR9	HR10	HR11	HR12
2007-11LdRC	6/8/2010	120.6	113.8	110.2	110.3	113	122.7	140	162.1	179	189	190.5	191.5
2007-11LdRC	6/9/2010	119.9	113.1	111.2	108.6	111.2	119.3	135.2	156.4	173.4	187.2	191.2	193
2007-11LdRC	6/10/2010	120.9	115.5	110.9	109.8	109.1	120.2	137.4	158	175.5	188.4	191.4	192.9
2007-11LdRC	6/11/2010	121.7	115.2	111	110.1	111.6	120.1	131.9	152.3	169.4	180.4	184.4	187.7
2007-11LdRC	6/12/2010	123.1	115.5	111.8	110	111.2	117.9	125.3	142.7	161	174.8	177.9	178
2007-11LdRC	6/13/2010	119.7	113.2	109.2	108.3	109.7	115.4	123.1	140.3	154.8	164.5	170.3	171.7
2007-11LdRC	6/14/2010	119.8	114.3	110.1	107.4	110.3	121	136.4	157.8	176.4	189.7	194.5	197.8
2007-11LdRC	6/15/2010	123.1	116.4	112	110.3	113.1	125.2	137.6	159	175.7	186.6	189.4	194.5
2007-11LdRC	6/16/2010	122.1	115.8	112.8	111.4	113.8	123.1	138.5	158.1	174.7	186.5	190.2	192
2007-11LdRC	6/17/2010	123.6	116.7	111.8	109.8	112.1	122	136.2	156	172.1	185.5	190.6	192.9
2007-11LdRC	6/18/2010	124	117.3	113.7	112	114	124.5	139.7	159.9	178.1	188.5	191.3	194.3
2007-11LdRC	6/19/2010	123.7	116.7	113	110.9	112	120.2	127	144.6	162.2	173.4	178.6	180.6
2007-11LdRC	6/20/2010	123.1	116.2	111.6	110.4	110.4	117.1	127.7	142.5	159.9	168.7	174.9	177.2
2007-11LdRC	6/21/2010	121	113.1	111.2	109.2	113.6	123.6	132.7	147.4	173.9	189.4	194.6	195.8
2007-11LdRC	6/22/2010	120.5	114.1	110.7	109.1	111	121.1	144.1	167.1	178	185.5	188.7	189.1
2007-11LdRC	6/23/2010	118.7	113.2	109.8	107.4	111.2	120.6	136.9	159.5	177.6	187.7	192.2	192.1
2007-11LdRC	6/24/2010	121	114.7	111	109.4	112.4	123	139.8	158.5	174.6	188.4	192.4	193.1
2007-11LdRC	6/25/2010	120.5	115.6	110.6	110.2	112.5	122.5	137.9	158.2	171.9	187.2	190.6	192.4
2007-11LdRC	6/26/2010	123.9	117.3	112.4	110.5	111.1	117.9	128.4	146.4	164.2	175.9	180.7	181.5
2007-11LdRC	6/27/2010	123.3	116	111.1	109.4	110.7	116.6	125.8	139.7	156.7	168.7	173.6	174.2
2007-11LdRC	6/28/2010	120.1	115.2	111.1	110	113.5	121.5	139.8	158.1	176.3	186.9	191.8	194.7
2007-11LdRC	6/29/2010	120.9	114.6	110.5	108.6	111.8	121.9	137.9	159	177.6	188	191.4	192.9
2007-11LdRC	6/30/2010	122.8	114.9	111.3	110.4	113.2	123.9	140.8	159.6	179.1	190	195	197.2
2007-11LdRC	7/1/2010	120.9	116.6	115.2	114.1	115.3	121.4	134.7	153	176.4	193.2	196.3	198.5
2007-11LdRC	7/2/2010	120.3	116.6	114.5	113.9	115.4	119.1	132.7	150.9	172.2	186.8	192.6	194.6
2007-11LdRC	7/3/2010	122	117.2	115.1	113.7	113.9	117.8	122.9	135.6	154.9	167	171.8	174.3
2007-11LdRC	7/4/2010	120.7	116.2	113.9	112.8	113.2	115.6	119.4	133.7	156.8	169.8	179.4	177.2
2007-11LdRC	7/5/2010	120.7	116.2	113.9	112.8	113.2	115.6	119.4	133.7	156.8	169.8	179.4	177.2
2007-11LdRC	7/6/2010	121	117.4	116.3	115.4	115.9	121.1	131.9	153.4	175	193.8	198.7	202
2007-11LdRC	7/7/2010	122.6	118.1	115.9	114.7	115.8	122.1	134.3	154.1	176.8	193.2	195.4	199
2007-11LdRC	7/8/2010	122.8	118	116	115.5	117.3	123.1	133.7	153.7	173.6	188.5	195.3	197.7
2007-11LdRC	7/9/2010	121.8	117.8	116.2	115.1	116.5	121.6	132.5	149.9	171.2	187.9	195.1	195.3
2007-11LdRC	7/10/2010	123.6	118.9	116.6	116	116.7	119.5	123.9	140.5	160.5	175.8	182.8	184.1
2007-11LdRC	7/11/2010	122	117.6	115.4	114.4	114.7	117	120.9	134.5	152	164.7	172.4	174.8
2007-11LdRC	7/12/2010	120.5	116.3	114.5	113.9	115.3	120.8	131.5	151.6	172	187.6	195.6	196.8
2007-11LdRC	7/13/2010	121.8	117.8	115.6	115.3	116.2	121.8	132	152.3	173.3	189.1	197.5	198.2
2007-11LdRC	7/14/2010	122	118	116.3	115.5	116.3	122	132.1	150.9	172	187.6	194.2	196.9
2007-11LdRC	7/15/2010	121.4	117.7	115.5	114.9	116.3	122	124.9	151.1	172.3	187.9	195.1	199.2
2007-11LdRC	7/16/2010	122.8	118.7	116.5	115.9	117.2	123.5	133.1	151.1	170.4	185.3	191.9	195.3
2007-11LdRC	7/17/2010	122.2	118.2	115.9	114.6	115.6	118.5	123.7	139.5	161.2	176.4	184.1	185.8
2007-11LdRC	7/18/2010	122	117.5	115.7	114.6	115.2	117.9	121.3	134.1	153.5	168.6	174.1	175.5
2007-11LdRC	7/19/2010	121.4	116.9	115.6	114.8	116.3	116.8	132.3	152	175.5	193.4	198.7	200.7
2007-11LdRC	7/20/2010	123.5	118.6	116.2	115.4	117	122.8	132.5	151.9	174.1	192.1	200.2	202
2007-11LdRC	7/21/2010	122	117.8	115.4	114.8	116.5	122.3	132.1	150.4	170.4	183.4	187.8	193.7
2007-11LdRC	7/22/2010	121.1	117	115.2	114.1	115.7	121.2	132.3	148.7	167.7	182.8	187.6	189
2007-11LdRC	7/23/2010	120.9	116.5	114.7	113.4	115.5	120.5	132.9	150.6	170.3	188.4	195.6	199.2
2007-11LdRC	7/24/2010	122.8	117.6	115.5	113.9	115	117.6	124.9	137.9	159	174.5	182.2	182.5
2007-11LdRC	7/25/2010	123.8	118.8	116.1	114.5	115	118.1	122.8	135.4	153.7	167.8	175.5	176.8
2007-11LdRC	7/26/2010	124.7	118.5	116.5	115.5	116.8	122.2	134.7	156.9	179.5	196.1	207.4	210.7
2007-11LdRC	7/27/2010	125.7	120.6	117.9	117.4	118.6	125.7	138.3	156.4	179.5	196.6	202.8	204.7
2007-11LdRC	7/28/2010	123.1	118.5	116.6	115.5	116.8	121.8	133.9	153.4	175	191	198.2	201
2007-11LdRC	7/29/2010	122.9	118.5	116.6	115.3	116.8	122.8	134	149.6	174.4	192.6	199	200.7
2007-11LdRC	7/30/2010	123.3	119.7	117.4	116.5	118.2	124.2	135.5	155.7	174.5	192.3	196.9	198.7
2007-11LdRC	7/31/2010	123.3	118.5	116	114.7	115.3	118.9	124	140.1	158.4	175.4	183.2	185.3
2007-11LdRC	8/1/2010	125.9	121.5	117.4	116.2	116.5	120.5	125	140.4	159.6	172.7	180.3	181.2
2007-11LdRC	8/2/2010	125.2	119.6	117.5	115.6	118.4	125.3	138.6	158.5	180.6	196.3	201.4	200.9
2007-11LdRC	8/3/2010	126.1	121.1	117.9	117.4	119.1	126.1	139.4	159.5	182.1	196.4	201.8	204.3
2007-11LdRC	8/4/2010	126.3	120.9	117.3	116.6	119.1	127.5	141	158.7	177.7	193	200.1	202.9
2007-11LdRC	8/5/2010	124.5	119.1	116.2	115.5	116.8	125.6	138.3	156.4	176.7	190.9	197.9	198.5
2007-11LdRC	8/6/2010	123.3	118.2	115.3	114.1	116.3	125.1	137.4	157.4	176.6	190.8	194.9	195.9
2007-11LdRC	8/7/2010	127.7	121	117.8	115.3	116.3	121.2	127.6	142.8	162.9	179.1	185.2	187.9
2007-11LdRC	8/8/2010	127	121.5	118.1	116.7	117.4	121.5	126.6	141.1	160.8	174.6	181.5	185
2007-11LdRC	8/9/2010	127.8	121.7	118.6	117.4	119.2	127.6	141.7	165.2	185.4	201.6	208.1	212.3
2007-11LdRC	8/10/2010	127.5	121.6	118.4	117.9	120	128	142.7	164.4	187	203	210.6	212.9
2007-11LdRC	8/11/2010	128.4	122.1	117.9	116.9	118.5	126.2	139.7	160.4	181.7	197.8	204.9	209.3
2007-11LdRC	8/12/2010	129.8	124	120.7	119	120.2	129.3	142.4	164.4	186.2	200.3	204.3	202.9
2007-11LdRC	8/13/2010	126.8	120.7	117.5	116.2	116.5	122.6	134.6	159.5	177.7	192.6	200.4	203.9
2007-11LdRC	8/14/2010	127.2	120.8	117.3	114.9	115.2	121.2	126.4	141	162.7	179.8	185.3	186.5
2007-11LdRC	8/15/2010	125.5	119.4	116.8	114.2	114.9	118.5	123.6	147.7	156.6	171.2	175.3	173.3
2007-11LdRC	8/16/2010	124.2	118.9	115.1	115.6	118.8	125.2	139.9	159.8	179.1	198.3	204.3	207.4
2007-11LdRC	8/17/2010	127.8	120.6	119.8	116.7	119.5	126.9	138.7	159.9	180.8	197.5	203.6	206.3
2007-11LdRC	8/18/2010	124.5	118.4	116.3	113.8	116.5	124.5	137.9	157	176.6	192.5	198.9	202.2
2007-11LdRC	8/19/2010	125.5	120.6	116.5	115.6	117.9	118.3	139.3	158.4	181.8	196.6	202.6	205.8
2007-11LdRC	8/20/2010	126.4	119.9	116.6	115.4	118	124.8	136.6	153.4	173.5	185.4	194.1	196.8
2007-11LdRC	8/21/2010	130.8	123.5	119.6	117.4	117.8	122.7	128.9	145.6	167.9	183.5	188.3	188.1
2007-11LdRC	8/22/2010	124.6	118.5	114.6	112.6	113	116.4	121.2	133.6	153.9	167.1	172.9	174
2007-11LdRC	8/23/2010	122.3	116.5	113.5	112.2	114.4	121.4	134	153.7	175.2	192.4	200.7	202.5
2007-11LdRC	8/24/2010	123.6	118	115.1	114.3	116.5	124.2	137	156.8	174.2	188.5	194.7	196.4
2007-11LdRC	8/25/2010	121.8	117.4	115	113.8	116.5	125.3	136.3	157.3	177.4	189.5	194.7	196.3

SetID	Date	HR1	HR2	HR3	HR4	HR5	HR6	HR7	HR8	HR9	HR10	HR11	HR12
2007-11LdRC	8/26/2010	124	119.4	116.8	115.6	118.2	127.4	144	159.5	176.8	191.2	198.1	202.9
2007-11LdRC	8/27/2010	124.7	119.6	117.4	115.3	117.3	127.3	145.6	162	181.7	196.1	199.7	201.4
2007-11LdRC	8/28/2010	127.9	122	118.2	116.6	117.1	120.6	128.1	144.3	166.6	181.1	188.3	190.1
2007-11LdRC	8/29/2010	124.6	119.1	115.1	112.7	113.7	118.1	123.1	136.4	156.1	168.1	176.8	178.2
2007-11LdRC	8/30/2010	122.1	117.1	114.4	113.6	116.2	125.2	143.7	158.4	180.4	192.9	200.1	203.7
2007-11LdRC	8/31/2010	126.7	119.9	116.5	115.5	118	125.5	144.5	161.7	182.2	193.9	201.8	205.3
2007-11LdRC	9/1/2010	123.1	117.5	113.9	113.3	114.9	123.8	141.3	157.5	176.6	191.7	196.8	200.4
2007-11LdRC	9/2/2010	123.7	119.1	116	115.4	116.1	125.9	143.8	159.6	177.9	191.2	197.9	200.7
2007-11LdRC	9/3/2010	122.9	116.4	114.6	113.3	114.1	123.6	141.7	157.6	177.1	189.2	194.8	198.8
2007-11LdRC	9/4/2010	125.3	118.7	115.9	114.9	115.7	121.5	127.5	142.8	161.3	176.2	185.5	189
2007-11LdRC	9/5/2010	121.4	116.3	112.5	110.4	111.3	115.3	120	132.7	152	164.2	173	174.4
2007-11LdRC	9/6/2010	125.2	119.7	116.6	115.4	116.4	121.2	127.6	141.9	162	178.2	185.1	187.6
2007-11LdRC	9/7/2010	123.3	118.7	116.7	115.3	117.4	125.9	141.9	159.6	178.8	191.8	197.2	197.5
2007-11LdRC	9/8/2010	120.8	116.4	114.2	113.6	115	123.9	140.1	157.6	174.5	187.5	192.8	195.3
2007-11LdRC	9/9/2010	121.2	116.9	114.3	113.1	115.7	124.4	141.4	156.4	174.8	187.6	191.4	197.2
2007-11LdRC	9/10/2010	121.5	117.7	114.8	113.7	115.7	125.8	142	158.1	172.9	187	192.5	195.9
2007-11LdRC	9/11/2010	125.7	119.8	117	115.8	117.2	121.7	127.8	144.6	163.9	178.4	189.6	190
2007-11LdRC	9/12/2010	124.8	119.3	115.8	114	118.2	119.2	124	136.8	155.2	168.5	174.3	177.1
2007-11LdRC	9/13/2010	121.4	116.7	114.9	114.4	116.7	124.8	142	160.3	178.9	191	195.9	202
2007-11LdRC	9/14/2010	121.5	116.6	114.1	113.1	116	125	143.6	158.3	175.7	188.9	195.3	199.2
2007-11LdRC	9/15/2010	125.8	117.7	115.8	114.9	117.7	126.2	146.8	158.6	176.3	186.3	194.2	196.8
2007-11LdRC	9/16/2010	122.3	116.5	115.6	113.8	117.8	125.2	142.7	159.2	178.3	190.3	194.3	194.9
2007-11LdRC	9/17/2010	121.5	116.9	115.3	114.4	115.6	125.7	143.1	161	180	191.7	196.2	195.3
2007-11LdRC	9/18/2010	122.8	117.7	115.1	113.1	114.7	119.7	127.8	142.5	160.7	173	175.6	178.2
2007-11LdRC	9/19/2010	119.2	114.5	112.3	111	112.3	116.4	121.5	133.6	149.6	161.4	169.1	171.5
2007-11LdRC	9/20/2010	115	111.9	110.5	109.2	109.5	118.8	135.1	150.6	169.3	182.9	187.6	189.4
2007-11LdRC	9/21/2010	118.3	114	112.1	111	113.3	121.5	137.6	152.6	170.5	183.3	191	192.5
2007-11LdRC	9/22/2010	118.6	114	112.3	111.4	114	122.7	129.9	154.7	171.9	186	188.7	190.8
2007-11LdRC	9/23/2010	119.8	115.9	113.3	111.5	113.5	123.4	141.8	153.9	172	183.4	189.9	192.4
2007-11LdRC	9/24/2010	122.3	117.3	115.4	114.5	116.6	126.4	142.7	159.7	177.6	194.1	198.6	199.7
2007-11LdRC	9/25/2010	123	116.7	115	113.5	114.5	119.4	126	143.1	165.5	178.8	184.7	185.5
2007-11LdRC	9/26/2010	124.7	119.1	116.2	113.8	113.8	119.2	124.5	139.7	157.5	173	179.9	183.8
2007-11LdRC	9/27/2010	122.8	118.8	115.4	114.1	116.4	124	142.1	161.2	176.9	186.3	195.3	192.9
2007-11LdRC	9/28/2010	118.9	114	112.5	111.4	114.3	122.3	137.1	151.7	170.5	181.7	187.2	187.8
2007-11LdRC	9/29/2010	117.9	113.4	111.4	110.9	113.8	121.8	137.8	152.3	165	175.4	182.2	189
2007-11LdRC	9/30/2010	116.9	114	111.4	113.9	112.4	122.1	137.4	153	170.1	182.1	186.3	189.3
2007-11LdRC	10/1/2010	120.8	117.2	114.4	114	114.5	124	139.3	158.5	177.4	190	194.5	193.5
2007-11LdRC	10/2/2010	121.3	116.9	114.6	113.3	114.9	119.8	125.5	142.4	164.7	181.9	187.7	188.8
2007-11LdRC	10/3/2010	122.3	117.2	113.9	112.5	113	118.7	123.2	136.6	155.6	168.7	178.9	178.9
2007-11LdRC	10/4/2010	120.8	116.5	114.6	113.6	115.5	123.2	139.7	155.8	173.7	188.7	194.5	198.5
2007-11LdRC	10/5/2010	118.8	115.2	113.2	113.2	115.5	122.9	135.6	153.1	173.3	182.7	188.2	190.6
2007-11LdRC	10/6/2010	119.6	114.7	112.9	112.5	115.2	123.2	139.1	155.6	173.2	184.9	188	193.2
2007-11LdRC	10/7/2010	120.2	115.5	113.5	113.1	115.6	122.9	140.5	156.3	176.5	187.4	192.1	195.3
2007-11LdRC	10/8/2010	125.7	120.2	116	114.2	116.7	123	141.4	165.8	183.7	194.4	198.4	194.4
2007-11LdRC	10/9/2010	120.2	116.1	113.3	112.5	113.3	118.7	124.1	150.2	163.6	176.5	178.1	178.7
2007-11LdRC	10/10/2010	119.1	115.2	112	111	113.3	115.7	121.4	143.6	155.8	174.4	171.6	172.4
2007-11LdRC	10/11/2010	118.5	115.2	113.5	112.3	114.7	120.5	141.4	163.4	178.2	188.5	193	197.3
2007-11LdRC	10/12/2010	120.7	114.8	113.3	114.4	115.4	121.1	144.3	169.7	183.3	192.3	193.5	194.1
2007-11LdRC	10/13/2010	118.9	115.1	114.3	112.4	114	123.1	142.1	157.3	173.5	185	191.5	194.4
2007-11LdRC	10/14/2010	116.5	114.6	112.4	112	114.5	120.9	131.6	154.3	172.7	185.5	191.8	193.9
2007-11LdRC	10/15/2010	118.9	114.6	112.5	112.4	113.5	121.7	139.1	154.5	171.9	187.2	191.5	191.7
2007-11LdRC	10/16/2010	119.2	114.2	111.2	109.8	111	114.6	121	135.4	153.4	167.9	171.9	174.3
2007-11LdRC	10/17/2010	118.9	114.6	112	111.1	112.5	115.9	122.1	135.6	153.4	162.6	172.5	178.9
2007-11LdRC	10/18/2010	121.1	116.4	114.2	113.1	116	125.5	145	162.7	182	196.5	199.8	204
2007-11LdRC	10/19/2010	119.5	114.9	112.8	112.3	114	123	139.8	156.2	174.8	188.1	194.1	195
2007-11LdRC	10/20/2010	118.9	115	113.2	113	115.7	125.4	144	159.8	179.1	189.7	197	201.9
2007-11LdRC	10/21/2010	119.3	115.8	113.5	112.5	113.9	122.9	142.2	157.5	179.2	194.1	198.8	203.4
2007-11LdRC	10/22/2010	123	118.4	113.9	112.9	115.5	124.8	143.7	159.5	178.2	192.4	194.8	199.1
2007-11LdRC	10/23/2010	122.5	117	114.9	113.5	114.9	120.1	129.1	144.4	161.9	175.9	180.9	183.7
2007-11LdRC	10/24/2010	119	115.3	112.7	111.6	112.5	116.8	124.9	137.1	152.3	163.7	168	168.4
2007-11LdRC	10/25/2010	115.1	110.7	109.3	109.2	111.8	120.6	140.8	157.4	174	185.6	189.4	192.7
2007-11LdRC	10/26/2010	116.8	113.4	111.5	111.2	113.4	121.9	140.8	156	174.7	184.9	189.4	188.4
2007-11LdRC	10/27/2010	116.7	113.5	111.8	110.5	113.2	122.7	141.2	156.9	173.1	185.9	192	192.7
2007-11LdRC	10/28/2010	116.7	113	110.8	110.4	112.5	121.1	136.3	152.7	171.1	182.5	185.3	188.4
2007-11LdRC	10/29/2010	118.6	114.3	112.5	112.3	114.2	122	140.6	157.5	173.6	184.5	187.8	189.7
2007-11LdRC	10/30/2010	125.1	119	115.4	113.3	113.9	116.8	124	139.7	156	169.3	172.9	171.3
2007-11LdRC	10/31/2010	121.8	116.5	112.4	110.9	110.9	114.4	118.5	133.6	146.1	158.4	168	169.9
2007-11LdRC	11/1/2010	122.6	113.9	111.1	108.8	111.8	121.2	136.5	158.5	168.8	184.5	189.8	192.2
2007-11LdRC	11/2/2010	127	120.7	116	114.4	117.2	125	142.9	159.9	175.5	185.8	190.9	193.4
2007-11LdRC	11/3/2010	123.5	116.4	112	110.7	113.5	124.1	142.9	156	172	182.2	187.6	189.7
2007-11LdRC	11/4/2010	116.7	110.4	107.9	107.2	110.6	120.9	141.2	154.9	170.6	181.2	185.1	186.3
2007-11LdRC	11/5/2010	116.3	110.5	106.9	106.8	109.8	121.4	142.9	155.7	172.4	183.4	185.7	185.8
2007-11LdRC	11/6/2010	119.7	112.7	108.7	106.5	109	116.1	125.2	139.4	159	171.8	175.4	175.8
2007-11LdRC	11/7/2010	118.1	110.8	106.9	105.5	106.8	112.7	120.6	136.8	154.4	164.9	169.2	172.4
2007-11LdRC	11/8/2010	113.2	108.6	105.5	104.5	108.7	120.2	138.8	156.7	170.6	180.8	185.1	186.4
2007-11LdRC	11/9/2010	116.1	110.6	108.4	107.4	110.8	123.4	142.6	158.5	173	184.7	188.2	190.6
2007-11LdRC	11/10/2010	116.5	111.9	108.3	108.9	110.5	122.6	143.2	159.8	174.2	183.7	186.3	187.7
2007-11LdRC	11/11/2010	116.6	111.8	108.7	108.6	109.9	122.1	134.6	153.5	166.1	176.7	183.1	183.7
2007-11LdRC	11/12/2010	114.3	109	104.8	104.3	106.7	115.8	127.1	144.6	163	174.2	179.2	179.6

SetID	Date	HR1	HR2	HR3	HR4	HR5	HR6	HR7	HR8	HR9	HR10	HR11	HR12
2007-11LdRC	11/13/2010	115.3	109.2	105.9	104.3	106	111.9	120.5	136.7	156.9	167.6	170.3	172.2
2007-11LdRC	11/14/2010	115.2	109.1	106	105.1	106	111.7	120.2	133.4	150.7	161	167.9	169.6
2007-11LdRC	11/15/2010	113.8	107.9	103.7	103	106	117.9	133.6	150.4	163.7	170.7	176.1	180.5
2007-11LdRC	11/16/2010	116.4	111.7	108.7	107.4	111.1	122.6	146.9	159.4	175.5	185.9	190.9	192.4
2007-11LdRC	11/17/2010	113.7	109.6	106.9	106.1	108.9	120.7	140.6	155.2	169.9	182	181.2	185.8
2007-11LdRC	11/18/2010	114.1	109.1	104.5	103.6	108.7	120.2	140	153.2	168.8	176.6	181.3	183.4
2007-11LdRC	11/19/2010	113.9	108.1	106	103.3	107.1	119.5	138.8	153.6	169	176	179.9	179.5
2007-11LdRC	11/20/2010	116	109.2	105.9	104.5	105.7	112.4	126.8	144.9	165.3	175.5	175	176.5
2007-11LdRC	11/21/2010	123.6	116.2	110	106.9	111.3	114.2	120.3	133.6	153.5	160.9	166.3	168.3
2007-11LdRC	11/22/2010	115.2	109	106	105.7	108.6	121.2	142.3	157.2	178.2	187.1	192.7	194.5
2007-11LdRC	11/23/2010	120.4	115.5	112.6	111.7	114.5	126	148.7	166	186.3	193.6	195.1	195.6
2007-11LdRC	11/24/2010	113.7	109.6	106.9	106.1	108.9	120.7	140.6	155.2	169.9	182	181.2	185.8
2007-11LdRC	11/25/2010	121.6	113.5	108.1	107.8	111.2	118.7	130	146.9	166.9	184.3	189.4	190.6
2007-11LdRC	11/26/2010	114.7	108.9	106.9	106.7	110	114.9	129.1	143.1	163.1	177.5	183	184.7
2007-11LdRC	11/27/2010	120.4	113.9	108.7	106.4	109	113.8	124.3	139	159.1	173	179.2	180.3
2007-11LdRC	11/28/2010	124	116	112	109	112.6	118.3	124.1	136	151.7	159.3	166.9	168.1
2007-11LdRC	11/29/2010	116.3	108.2	106	103	107.9	118.9	138.4	154.7	167.7	181.2	182.5	185
2007-11LdRC	11/30/2010	116.9	111.3	106.9	105.2	107.9	121.2	139.8	155.8	171.5	182.3	185.4	187.1
2007-11LdRC	12/1/2010	110.2	107.6	105	104	106.4	121.8	132.9	141.8	158.5	170.4	176.4	179.9
2007-11LdRC	12/2/2010	111.9	107.9	104.9	104.2	106.5	115.7	135.6	144.3	157.3	173.7	180.4	182.8
2007-11LdRC	12/3/2010	112.4	107.6	105.5	105.4	108.1	117	135.9	143.9	159.2	172	178.1	181.6
2007-11LdRC	12/4/2010	114.2	109.3	106.2	105.8	107.3	111.1	119.7	129.5	142.6	161.5	165.4	170.4
2007-11LdRC	12/5/2010	114.7	109.9	107.7	105.2	106.4	110.2	116.9	128.7	144.4	158.3	162.4	163.8
2007-11LdRC	12/6/2010	109.4	105.6	104.8	106	109.5	124.4	141.8	156.9	171	177.3	179.9	179.7
2007-11LdRC	12/7/2010	112.5	107.1	105.7	104.6	107.5	117.4	135	147.1	160.3	169.6	174.7	176
2007-11LdRC	12/8/2010	109.8	105.9	102.8	102.9	105.8	113.8	125.3	141.3	152.5	158.7	163.2	165.1
2007-11LdRC	12/9/2010	111.3	106.7	103.8	103.1	106.1	115.9	129.9	140.8	160.6	169.1	171.9	172.5
2007-11LdRC	12/10/2010	111.1	107.2	104.7	105.2	108.1	116.4	137	149.8	152	162	173.8	175.1
2007-11LdRC	12/11/2010	112.7	108	106.1	104.7	106.6	112.2	119.7	131.9	149.2	161.4	163.8	164.5
2007-11LdRC	12/12/2010	111.5	107	104.7	103.1	104.3	108.5	115	125.9	143	155.6	159.4	158.6
2007-11LdRC	12/13/2010	110.1	105.8	103.8	103.5	106	115.4	134.1	146.5	160.9	172.5	173.6	171
2007-11LdRC	12/14/2010	111	106.8	104.3	104	107	115.6	132.6	144.6	156.4	165.1	167	169
2007-11LdRC	12/15/2010	109.2	105	102.8	102.4	104.8	119.7	131.9	143.5	155.6	162.3	163.8	167.1
2007-11LdRC	12/16/2010	108.6	103.5	103.4	102.5	104.8	112.4	129.2	141.5	151.6	163.7	164.4	167.9
2007-11LdRC	12/17/2010	110.2	106.2	103.6	102.8	105.1	113.6	132.1	139	153.3	163	166.9	167.9
2007-11LdRC	12/18/2010	110.5	106.1	103.6	102.8	105.5	110.1	119.7	130.2	146.7	155.9	159.9	159.2
2007-11LdRC	12/19/2010	112.2	106.6	104	103.4	105.2	110.4	115.6	126.8	142.4	153.9	154	154.2
2007-11LdRC	12/20/2010	113.4	107.9	105.3	104.3	106.6	116	131.3	144.9	159.9	172.3	176.3	175.4
2007-11LdRC	12/21/2010	112.1	107.1	104.3	103.3	105	114.8	129.8	144	157.7	169.5	172	176.8
2007-11LdRC	12/22/2010	111.4	106.4	104.2	104	106.4	114.9	132.2	145.3	160	175.4	177.6	178.1
2007-11LdRC	12/23/2010	121.8	109.6	106.8	105.5	107	114.7	127.1	143.8	163.4	179.5	184.3	183.2
2007-11LdRC	12/24/2010	112.8	109.7	107.4	106.3	113	121.7	131.2	146.6	160.8	170.6	174.2	174.5
2007-11LdRC	12/25/2010	114.9	107.7	104.3	102.7	103.8	107.5	113.9	123.2	138.7	146.9	148.9	149.1
2007-11LdRC	12/26/2010	114.9	107.7	104.3	102.7	103.8	107.5	113.9	123.2	138.7	146.9	148.9	149.1
2007-11LdRC	12/27/2010	111	106.1	104.3	103.1	105.7	110	116.9	127.6	145.4	162.3	166.9	167.9
2007-11LdRC	12/28/2010	113	108.2	106.3	105.7	107.9	114.2	126.2	140.3	161.6	177.7	183	182
2007-11LdRC	12/29/2010	116.1	110.5	107.4	106.3	108.8	116.5	128.2	143.6	163	180	185.4	186.5
2007-11LdRC	12/30/2010	122	114.5	109	107	109.5	121	131.9	151.4	170.4	179.3	180.1	185.3
2007-11LdRC	12/31/2010	125.1	117.6	112.4	110.1	111.5	120.7	134.1	150.4	172.9	178.8	184.9	186.8

SetID	Date	HR1	HR2	HR3	HR4	HR5	HR6	HR7	HR8	HR9	HR10	HR11	HR12
Based on Hour Ending		1	2	3	4	5	6	7	8	9	10	11	12
Total MW by Hour		42,384	40,490	39,432	39,075	39,935	42,964	48,278	54,187	60,358	64,708	66,303	66,729
Total Obs by Hour		365	365	365	365	365	365	365	365	365	365	365	365
Off Peak Hrs MW		42,384	40,490	39,432	39,075	39,935	42,964	48,278					
Total Off Peak Obs by Hour		365	365	365	365	365	365	365					
Mid Peak Hrs MW									54,187	60,358	64,708	66,303	66,729
Mid Peak Obs by Hour									365	365	365	365	365
Priority Peak Hrs MW													
Priority Peak Obs by Hour													
Total MW Check		0.00	0.00	0.00	0.00	0.00	0.00	0.00	0.00	0.00	0.00	0.00	0.00
Total Obs Check		0	0	0	0	0	0	0	0	0	0	0	0
Total Avg. MW			158.16										
Off Peak Avg. MW			124.65										
Mid Peak Avg. MW			178.64										
Priority Peak Avg. MW			195.60										

SetID	Date	HR13	HR14	HR15	HR16	HR17	HR18	HR19	HR20	HR21	HR22	HR23	HR24	DOW
2007-11LdRC	1/1/2010	177.2	176.2	175	171.5	179	189.2	195.6	185.5	172.7	159.1	141.4	120.8	5
2007-11LdRC	1/2/2010	177.2	176.2	175	171.5	179	189.2	195.6	185.5	172.7	159.1	141.4	120.8	6
2007-11LdRC	1/3/2010	173.3	166.5	162.2	163.8	168.9	179	195.3	192.2	179	159.3	143	119	7
2007-11LdRC	1/4/2010	175.4	175.1	172.3	174.7	177.1	183.5	205.1	203.2	187.2	165.3	141.5	119.4	1
2007-11LdRC	1/5/2010	169.2	172.4	171.2	172.3	174.5	183.6	203.8	197.8	184.1	163.4	151.3	118.8	2
2007-11LdRC	1/6/2010	173	174.6	175	176.2	176.3	182.1	203.7	200.7	185	164	143.8	118.9	3
2007-11LdRC	1/7/2010	176.9	180.1	176.3	177.9	179.3	185.1	204.7	200.2	185	168.1	142.7	121.1	4
2007-11LdRC	1/8/2010	174.6	175	174.7	174	175.2	179.8	197.1	193	177.6	162.9	141.8	122.9	5
2007-11LdRC	1/9/2010	165.6	166.2	168.4	170.2	172.7	180.7	194.3	193.7	180.1	164.7	141.1	123.4	6
2007-11LdRC	1/10/2010	161.6	159.4	156.2	159.3	161.2	177.8	191.1	185.5	172.5	155.1	133.7	115.5	7
2007-11LdRC	1/11/2010	168.4	171	166.2	170.4	172.9	177.5	199.9	195.9	181.5	162.9	136.6	116.4	1
2007-11LdRC	1/12/2010	171.8	172.3	170.2	172.7	175.7	175.9	197.4	195.1	178.3	162.4	135.9	114.9	2
2007-11LdRC	1/13/2010	162.4	165.8	167.3	167.6	168	172.9	193	191.2	178.1	160.4	134.6	114.8	3
2007-11LdRC	1/14/2010	173.9	172.4	172.3	175.3	177.2	182.8	203.2	201.1	183.8	165.6	139	119.8	4
2007-11LdRC	1/15/2010	177	175.2	175.2	178.1	176.8	181.2	197.8	189.5	183	167.1	146.5	125.6	5
2007-11LdRC	1/16/2010	172.7	172.3	171.5	173	178.2	183.9	198.8	196.8	182.4	168.8	147	127.8	6
2007-11LdRC	1/17/2010	172.3	171.8	170.6	172	173.6	179.6	201.4	196.3	187.1	173.6	150.2	130.3	7
2007-11LdRC	1/18/2010	187.7	183.7	180.2	180.3	181	186.5	208.6	204.5	192.8	175.4	148.9	126	1
2007-11LdRC	1/19/2010	180	176.5	174.5	174.9	176.5	183.2	201.4	200.2	185.5	171.2	139.6	120.5	2
2007-11LdRC	1/20/2010	182.2	180.2	181.3	181.5	183	187.3	204.1	200.2	185.7	166	142.1	121	3
2007-11LdRC	1/21/2010	177.8	175.8	174.9	177.7	178.8	187.1	204.1	200.7	183.8	168.2	141.6	121	4
2007-11LdRC	1/22/2010	185.5	184.2	183.5	181.2	179.5	185.6	194.1	188.1	173.8	158.7	138.4	120.4	5
2007-11LdRC	1/23/2010	158.2	157.9	155.5	160.4	164.7	170.9	184.5	186	171	155.9	136.5	119	6
2007-11LdRC	1/24/2010	166.6	164.8	167.3	170.6	173.4	175.1	190.9	194.7	180.4	165.3	139.2	120.7	7
2007-11LdRC	1/25/2010	183	182.1	184.4	185	186.8	193.6	210	210.7	189.8	164.5	144.1	123	1
2007-11LdRC	1/26/2010	184.1	185	186.1	185.6	189.5	193.8	212.8	208	193.1	172.3	143.6	122.2	2
2007-11LdRC	1/27/2010	184.9	184.9	186.7	187.2	187.9	188.9	204.5	206	190.9	170.8	145.1	123.5	3
2007-11LdRC	1/28/2010	174.9	181.3	182.4	185.4	185.3	188.1	205.6	205.8	189.6	171.1	144.6	124.4	4
2007-11LdRC	1/29/2010	182.8	186.1	185.3	187.3	187.7	188.5	198.4	197.8	181.6	166.7	146.8	126.3	5
2007-11LdRC	1/30/2010	170.8	172	171.7	172.9	177.2	182.8	191	187.5	175.3	159.4	139.9	121.4	6
2007-11LdRC	1/31/2010	166.7	166.8	169.1	171	176.3	180.3	194.2	196.2	184.4	163	140	118.4	7
2007-11LdRC	2/1/2010	182.4	183.7	182.8	184.7	186.5	185.9	210.9	209.4	193.2	170.9	145.1	124.5	1
2007-11LdRC	2/2/2010	172.2	169.6	167.5	168.2	172	180	199.3	196	182.1	160.4	136.1	116.2	2
2007-11LdRC	2/3/2010	169.7	166.9	166.4	169.6	174.1	181.4	196.9	194.5	179.8	159.7	134.2	113.4	3
2007-11LdRC	2/4/2010	167.5	166.6	162.8	166.2	173.6	181.9	201.4	196	180	159.7	137.4	115.9	4
2007-11LdRC	2/5/2010	171.5	170.9	169.7	172.2	176.8	180.7	194.5	192	180.5	162.8	142.3	121.1	5
2007-11LdRC	2/6/2010	172.2	172.7	173.6	178.8	186.2	185.5	198.4	201.9	186.4	167.3	142.2	122.6	6
2007-11LdRC	2/7/2010	178.4	178.8	175.1	177	178.2	180.7	196.5	207.8	193	170.3	143.4	121.5	7
2007-11LdRC	2/8/2010	190.7	189.3	190	192.2	193.4	194.7	209.7	210.1	197.7	175.9	148.2	124.8	1
2007-11LdRC	2/9/2010	184.5	185.4	183.1	187.5	186.4	189.7	202.8	207.6	193	174.2	144.5	121.6	2
2007-11LdRC	2/10/2010	184.8	183.6	186.1	188	190.1	191.9	203	205.4	191.1	174.6	148.2	124.1	3
2007-11LdRC	2/11/2010	181.7	185.1	185.2	188.3	188.2	188.7	201.4	206.7	191.8	172.1	145	122.2	4
2007-11LdRC	2/12/2010	178.7	179	179.3	180	176.8	181.7	195.4	193.9	184	166.8	141.3	122.8	5
2007-11LdRC	2/13/2010	159.2	158	158.4	160.9	164.3	170.7	184.1	185	173	159.5	137.4	119.8	6
2007-11LdRC	2/14/2010	154.7	154.5	153.4	154.5	159.6	166.2	180.9	187.1	173.5	158.2	134	110.9	7
2007-11LdRC	2/15/2010	169.2	170.3	169.5	171.3	172.5	176.3	188.4	193.7	180	160.4	136.1	116.7	1
2007-11LdRC	2/16/2010	170.5	174.6	174.8	176.1	177.4	181.2	195.4	198.2	187.8	165	137.5	118.4	2
2007-11LdRC	2/17/2010	173	171.4	170.2	173.1	174.6	178.3	192	198.7	181.9	164.3	139.7	117.7	3
2007-11LdRC	2/18/2010	173.2	171.5	173.3	177.2	179.4	180	193.6	199.7	184.3	166.9	143.6	118.7	4
2007-11LdRC	2/19/2010	173.8	174	176.6	176.9	174.6	176.7	189.2	192.3	177.5	166.7	142.4	123.6	5
2007-11LdRC	2/20/2010	159.9	157.5	157.2	158.9	165.3	169.9	179.9	183.7	171.9	158.1	137.6	119.2	6
2007-11LdRC	2/21/2010	156	154.9	156.6	159.8	162.9	167.6	180.3	188	175.6	159.2	136.2	118.6	7
2007-11LdRC	2/22/2010	164.2	164.5	166.9	168.7	175.2	179.5	194.5	202.1	186.1	167.4	137.3	118.3	1
2007-11LdRC	2/23/2010	171.5	172.1	175.8	180.5	181.3	184.8	196.1	204.9	190.5	155.5	142	120.4	2
2007-11LdRC	2/24/2010	176.1	175.9	178.2	179.4	181.2	182.9	193.2	202.1	187.8	171.5	144.3	123.3	3
2007-11LdRC	2/25/2010	177.4	178.8	179.5	181	182.4	183.3	194.1	205.3	190.1	171.6	143.9	122.3	4
2007-11LdRC	2/26/2010	178	176.1	174.5	175.8	175.1	176.1	183.6	188.7	177.7	163.2	139.6	121.9	5
2007-11LdRC	2/27/2010	165.1	163.5	164.3	167	171.4	174.8	184.3	189.8	176.9	161.2	141.3	121.5	6
2007-11LdRC	2/28/2010	161.2	163.1	163	164.7	169.9	175.9	185.6	192.7	179.2	158.9	136.3	114.9	7
2007-11LdRC	3/1/2010	175.5	175.9	177.3	180	177.8	181.3	191.9	199.4	187.1	168.1	143.4	121.4	1
2007-11LdRC	3/2/2010	172.5	173.9	174.8	179	180.1	180.4	188.7	195.4	183.6	165.7	142.2	118.8	2
2007-11LdRC	3/3/2010	172.1	173.9	175.4	177.2	178.3	180.5	190.3	196.3	184	168	141	118.3	3
2007-11LdRC	3/4/2010	175.5	177.8	176.4	178.7	183	181.4	191.1	199	187.6	163.2	144.4	121.5	4
2007-11LdRC	3/5/2010	177.6	178.3	180	181.4	177.9	177.8	186.8	190.4	178.8	165	144.5	125.2	5
2007-11LdRC	3/6/2010	172.2	169.2	171.3	174.2	176.2	178.8	184.8	191.7	179.9	166.1	146.6	127.1	6
2007-11LdRC	3/7/2010	164.8	166.4	165.5	165.2	170	175	185.9	196	184.2	165.7	142.1	122.5	7
2007-11LdRC	3/8/2010	181.4	183.3	184.5	185.9	185.7	187.5	196.3	206.1	194	176	150.8	127.5	1
2007-11LdRC	3/9/2010	191.6	192.6	194.3	195.9	194.9	194.9	204.1	210.6	198.6	181.2	155.2	132.9	2
2007-11LdRC	3/10/2010	181.5	177.3	177.2	180.1	180.6	184.9	199.9	204.7	189.7	173	147	123.6	3
2007-11LdRC	3/11/2010	167.7	166.1	165.2	165.8	169.7	174.6	185.2	189	177.7	161	137.9	117.7	4
2007-11LdRC	3/12/2010	168.3	168.1	168.5	169	170.7	173.3	181.3	188.4	174.6	163.7	140.4	122.2	5
2007-11LdRC	3/13/2010	165.2	161.2	157.8	157.9	161.5	164.6	174.1	180.4	170.3	154.8	134.8	116.4	6
2007-11LdRC	3/14/2010	152.9	153.9	154.5	155	160.9	166.7	176.2	181.2	172.5	154.2	130.5	111.9	7
2007-11LdRC	3/15/2010	160.6	158.7	157	158.4	160.6	166.7	177.4	191.9	179.4	160.9	134.3	114.9	1
2007-11LdRC	3/16/2010	160.9	159.9	156.9	157.8	160.1	163.6	177.8	187.8	177.2	161.7	132.7	112.3	2
2007-11LdRC	3/17/2010	159.4	157.7	162.1	164	166.3	170.1	182.3	189.1	178.6	160.9	136	115	3
2007-11LdRC	3/18/2010	168.2	169.7	169.5	173.4	174.2	176	180.8	189.9	179	163.8	138.7	118.4	4
2007-11LdRC	3/19/2010	169.3	169.2	168.4	169.3	169.1	173.5	185.8	185.8	176.2	162.3	141.4	122.2	5
2007-11LdRC	3/20/2010	163	160	160.5	161.2	166.4	171	181.6	184.8	174.6	162.2	140.9	122.1	6

SetID	Date	HR13	HR14	HR15	HR16	HR17	HR18	HR19	HR20	HR21	HR22	HR23	HR24	DOW
2007-11LdRC	3/21/2010	161.2	160	160	161	164.1	169.7	177.8	187.4	177.2	162	140.6	121.3	7
2007-11LdRC	3/22/2010	178.2	177.6	180	182.3	182.1	185.3	192.8	202.5	189.7	173	146	125.8	1
2007-11LdRC	3/23/2010	181.4	182.1	185.2	186.8	189.6	191.3	196.8	206.2	194.1	179.6	150.6	130.2	2
2007-11LdRC	3/24/2010	188.3	188.8	189.1	192	194.9	194.5	201.8	210.3	199.9	182.5	156.8	133.9	3
2007-11LdRC	3/25/2010	193.6	196.6	199.2	198.1	198.2	197.9	203.3	209.7	197.9	181.7	154.7	134	4
2007-11LdRC	3/26/2010	188.3	188.5	187.4	187	187.4	191.8	200	201	189.9	175	152.9	131.7	5
2007-11LdRC	3/27/2010	166.2	162.4	161.2	160.5	165	171.1	181.2	184.1	173.2	162.1	140	122.9	6
2007-11LdRC	3/28/2010	157.8	154.9	155.8	157.2	163.2	169	174.2	182.8	174.9	161	138.2	116.6	7
2007-11LdRC	3/29/2010	175.1	175.3	175.2	177.1	181.2	186.2	193.4	204.1	190.8	170.3	147.8	123.9	1
2007-11LdRC	3/30/2010	180.4	179.9	180.7	183.3	181.5	188.5	197	202.9	192.2	175.7	150.5	125.4	2
2007-11LdRC	3/31/2010	186.7	186.1	185.7	186.7	186.8	189.6	196.9	200.8	189.7	172.9	149.8	124	3
2007-11LdRC	4/1/2010	178.5	178.6	178.9	178.1	178.2	181.3	189.7	200.4	187.4	165.9	143.7	121.5	4
2007-11LdRC	4/2/2010	177	176	176.9	176.9	176.5	176.9	189.4	181.7	175.6	163.9	132	115.7	5
2007-11LdRC	4/3/2010	165	166.6	164.7	165.2	168.8	174.2	182.3	187.1	172.9	155.3	132.8	113.2	6
2007-11LdRC	4/4/2010	160.4	161.4	163.3	162.4	171.6	172	187.2	184.3	169.5	155.7	127.5	110.8	7
2007-11LdRC	4/5/2010	173.9	177	174.6	177.9	176.3	176.8	191.7	193	173.3	162.1	126.3	112.4	1
2007-11LdRC	4/6/2010	176.5	175.9	179.4	175	176.8	181.6	199.1	190.9	176.3	161.3	127.9	112.8	2
2007-11LdRC	4/7/2010	175.4	176.5	177.7	176.9	178.2	181.1	192.8	197.1	182.4	161.6	131.8	113.2	3
2007-11LdRC	4/8/2010	178.1	179.6	181.9	182.1	180.9	182.5	193.4	198	188.8	166.5	132.2	115.1	4
2007-11LdRC	4/9/2010	185.1	185.7	186.8	186.8	191.3	189.5	197.8	194.5	186.1	169.5	149.5	129.6	5
2007-11LdRC	4/10/2010	175	171.6	171.4	171.3	177	179.9	186.5	195	183.6	163	144	126.8	6
2007-11LdRC	4/11/2010	165	164.4	166.9	168.3	173.6	178.6	188	189	178.5	163.3	142.3	121.5	7
2007-11LdRC	4/12/2010	187.1	184.8	186.7	186.7	185.7	187.2	198.1	204.8	194.9	165.3	151.9	126.5	1
2007-11LdRC	4/13/2010	182.9	182.5	181.3	181.2	182.8	185.5	195.6	206	194.3	171.6	143.4	123.6	2
2007-11LdRC	4/14/2010	184.9	185.7	187.2	187.2	185.6	186.3	192.3	203.8	189.1	171.1	144.6	126.6	3
2007-11LdRC	4/15/2010	186.7	185.7	186.1	187.1	187.8	188.7	195	207	195.3	168.9	145.2	125	4
2007-11LdRC	4/16/2010	185.6	185.3	184	185.9	184.8	183.6	188	194.8	182.8	169.4	144.8	127.8	5
2007-11LdRC	4/17/2010	174.1	171	171.5	173.9	177.3	179.4	183.5	191.7	181.2	165.5	143.7	126.8	6
2007-11LdRC	4/18/2010	168.8	167.8	167.8	169.6	174.3	179.5	184.5	197.6	177.5	161.9	131.1	115.8	7
2007-11LdRC	4/19/2010	186.5	186.7	188.2	187.9	186.1	188.4	198.8	197.6	186.7	164.7	130.1	115.4	1
2007-11LdRC	4/20/2010	181.9	179.6	179.1	182.9	179	182.5	201.8	194.6	178.6	161.8	130.6	113.1	2
2007-11LdRC	4/21/2010	182	179.4	181.9	182.5	181.1	181.7	186.4	198.3	185.3	168.4	141.9	122.8	3
2007-11LdRC	4/22/2010	179.4	182.3	182.9	185.5	184	184.5	189.8	202.2	190.6	172.8	143	123.7	4
2007-11LdRC	4/23/2010	179.1	181.6	182.3	182.5	180.8	178.9	179.6	186.5	175.2	163.7	141.3	123.4	5
2007-11LdRC	4/24/2010	165.5	165.8	164.3	165.8	167.9	170.9	176.9	182	173.8	153.9	136.7	120.3	6
2007-11LdRC	4/25/2010	159	159.7	158.9	159.8	164.4	168.9	175	185.3	173.7	153.4	135	118.3	7
2007-11LdRC	4/26/2010	177.9	178.1	177.5	179.9	180.2	180.3	185.1	197.7	185.3	165.7	137.8	118.2	1
2007-11LdRC	4/27/2010	177.8	180	180.7	184	184.7	181.3	187.1	197.8	187	164.7	139.5	118.5	2
2007-11LdRC	4/28/2010	182.4	186.8	186.7	187.6	187	186.1	191.9	205	189.7	159.6	144	125.4	3
2007-11LdRC	4/29/2010	170	170.4	175.4	175	175.7	181.3	192.8	188.7	174.8	159.6	138.7	120.8	4
2007-11LdRC	4/30/2010	180	178.6	180.3	182.5	181.7	180.6	183.7	191.3	179.9	166.4	143.4	125.1	5
2007-11LdRC	5/1/2010	162.7	163.7	165.9	167.3	170.7	173.5	179.4	185.1	173.5	159.5	138.7	119	6
2007-11LdRC	5/2/2010	159.2	160.9	161.3	164.4	167.3	172.9	178.2	189.8	179.1	160.1	136.6	121.3	7
2007-11LdRC	5/3/2010	182.6	184.8	185.2	185.2	183.4	183	186.8	200.7	187.9	168.8	141.2	118.4	1
2007-11LdRC	5/4/2010	187.2	189.5	190	190.5	188.3	190.2	195.7	205.2	192.5	172.9	144.2	122.9	2
2007-11LdRC	5/5/2010	188.6	189.9	193.1	194	194.8	191.8	195	207.7	195.3	174.9	142.7	123.3	3
2007-11LdRC	5/6/2010	188	191.9	194.7	197.7	195	191.9	192.4	205.1	194.1	175.1	147	126.4	4
2007-11LdRC	5/7/2010	190.8	195.9	194.6	192.2	190.3	186.3	184.8	196.2	186.9	171.8	148.1	128.5	5
2007-11LdRC	5/8/2010	171	171.9	173.6	174.8	175.9	176.8	178.3	188.2	178.6	167.7	143.2	125.7	6
2007-11LdRC	5/9/2010	162.9	163.6	165.2	166.5	169.9	173.1	176	185.1	176.7	161.1	139.1	122	7
2007-11LdRC	5/10/2010	190.9	192.7	191.6	189.8	186.9	184.2	190.6	203.4	189.8	172.1	141	122.5	1
2007-11LdRC	5/11/2010	184.2	186.8	188.9	191.9	189.3	185.5	189.5	203.7	191.2	171.8	143.1	121.4	2
2007-11LdRC	5/12/2010	187.2	187.6	192.2	194.3	192.7	188.8	191.3	202.3	190.6	172.5	142.8	122.8	3
2007-11LdRC	5/13/2010	186.3	189.8	186.5	189	186.3	184.5	185.5	198	190.5	172	145	122.7	4
2007-11LdRC	5/14/2010	187.2	189.3	189.2	185.9	181.2	179.7	182.3	193.8	181.7	154.6	144.4	125.3	5
2007-11LdRC	5/15/2010	173.6	173.9	174.7	176.4	177.3	178.8	181.2	183.4	177.9	160.8	134.3	118.3	6
2007-11LdRC	5/16/2010	165.8	165.8	167.3	171.8	176.3	177.6	182.8	191.2	186.6	157.9	128.8	117.8	7
2007-11LdRC	5/17/2010	191.1	190.8	191.9	193.4	192.4	188.3	188.6	201.4	191.1	172.1	144.1	122.2	1
2007-11LdRC	5/18/2010	190.3	190.9	192.7	191.6	190.6	188	189.6	201.9	192.5	172.1	143.9	125.1	2
2007-11LdRC	5/19/2010	189.8	190.8	190.6	189.6	185.2	181.9	187	198.3	189.8	172.5	146.1	124.1	3
2007-11LdRC	5/20/2010	181.4	178.7	176.3	175.9	176.9	176	180.6	188.2	180.2	162.1	137.2	119.7	4
2007-11LdRC	5/21/2010	181.9	185.8	184.2	184.9	182.7	180.1	181	187.8	180.6	166.1	144.4	124.8	5
2007-11LdRC	5/22/2010	176.9	167.5	169.5	169.8	172.3	174.1	177.1	183.5	177.6	159	143.2	125.1	6
2007-11LdRC	5/23/2010	169.7	170.6	169.5	171	174.4	178.8	183.5	190.5	184.9	171	134.8	123	7
2007-11LdRC	5/24/2010	197.7	198.9	196.8	195.1	194	191.1	193.7	206.5	197.4	177.2	149.2	127	1
2007-11LdRC	5/25/2010	192.4	193.1	193.2	190.6	191.8	187.8	190.5	201	195.7	174.9	145.5	126	2
2007-11LdRC	5/26/2010	191.2	192.4	193.8	195	193.8	191.1	192.1	201.7	191.3	175.3	146.1	125.5	3
2007-11LdRC	5/27/2010	190.8	192.7	193.5	196	193.1	189.3	187.9	200.5	193.2	176.3	146.6	126.8	4
2007-11LdRC	5/28/2010	188.9	189.3	189.8	189.9	186.6	183.4	181.9	190.2	181.7	168.4	146.3	132.8	5
2007-11LdRC	5/29/2010	174.1	174.7	174.9	175.2	173.5	177.8	180.3	183.2	179.8	166.1	146	130.1	6
2007-11LdRC	5/30/2010	169.7	170.6	169.5	171	174.4	178.8	183.5	190.5	184.9	171	134.8	123	7
2007-11LdRC	5/31/2010	169.7	170.3	172.9	175.2	179.1	182.4	187.6	194.7	188.2	164.7	145.6	125.2	1
2007-11LdRC	6/1/2010	191.8	195.8	196.8	200.1	198.9	195.4	196.5	204.8	200.3	184.3	158.8	136.8	2
2007-11LdRC	6/2/2010	193.4	195	198.5	201	201	198.3	198.8	208.1	200	184.9	158.8	136.2	3
2007-11LdRC	6/3/2010	196	195.6	197.2	198.3	195.7	192.5	193.1	201.2	197.1	182.2	157.4	135.1	4
2007-11LdRC	6/4/2010	196.8	197.5	198.3	199.7	198.8	194.9	193.4	199.9	194.7	181.2	160.3	140.5	5
2007-11LdRC	6/5/2010	185.1	183.8	184.4	185.6	187.8	186.7	186.9	193	188.6	176.8	157.2	137.5	6
2007-11LdRC	6/6/2010	176.3	175.7	177.4	179	182.3	183.9	183.6	193.3	189.9	176.3	154.2	133.6	7
2007-11LdRC	6/7/2010	192.8	195.7	197.1	196.9	194.8	190.4	191.3	200.6	195.8	180.1	155.3	132.3	1

SetID	Date	HR13	HR14	HR15	HR16	HR17	HR18	HR19	HR20	HR21	HR22	HR23	HR24	DOW
2007-11LdRC	6/8/2010	191.4	193.2	194.1	195.9	193.7	189.9	189.7	198.5	192.7	169	154.7	132.9	2
2007-11LdRC	6/9/2010	193.9	194.3	196.5	197.5	196.8	192.5	192.3	200.2	194.3	180.8	156.7	134.1	3
2007-11LdRC	6/10/2010	193.9	195.4	195.2	197.4	196.7	190.1	190.9	198.2	192.8	177.9	155.9	143.3	4
2007-11LdRC	6/11/2010	188	188.3	188.4	191.4	193.2	192.5	188.4	195.6	190.3	177.2	156.7	139.7	5
2007-11LdRC	6/12/2010	177.5	179.5	179.4	181.1	182.1	184.1	182.6	189.2	185.7	172.1	151.6	137.2	6
2007-11LdRC	6/13/2010	172.1	170.5	172.9	174.6	179.7	181.3	183.1	191.5	187.2	173.9	153.1	132.7	7
2007-11LdRC	6/14/2010	197.6	193	199.1	199.5	198.4	197.4	196	204.2	199.3	183.5	159.3	137.5	1
2007-11LdRC	6/15/2010	195	197.8	199.3	200.2	195.9	194.7	195.2	200	199.3	183.5	158.5	135.9	2
2007-11LdRC	6/16/2010	192.1	197.5	198	196.5	197.2	193.4	190.9	198.3	194.9	179.3	156.7	136.2	3
2007-11LdRC	6/17/2010	193	196.2	199.2	199.8	198.8	194.8	193.7	200.9	198.8	184.4	159.9	137.7	4
2007-11LdRC	6/18/2010	194.3	192.7	194.3	196.9	196	194.1	191.2	196.4	192.9	180.2	147.1	137.1	5
2007-11LdRC	6/19/2010	181.4	180.5	182.8	184.3	186.5	186.3	184.8	191	187.4	176.6	156.3	137.6	6
2007-11LdRC	6/20/2010	176.4	175.7	176.1	179.2	181.4	180.7	181.3	187.4	184.8	173.8	156	134.3	7
2007-11LdRC	6/21/2010	196.9	194.5	193.3	190.2	188.8	188.8	191.4	198.6	194.3	178.3	156	135.5	1
2007-11LdRC	6/22/2010	188.7	189.4	189.6	188.8	188.4	189.5	192.5	194.8	190	160.2	149.3	133.7	2
2007-11LdRC	6/23/2010	190.7	191	191.1	189.9	188.6	190	194.1	199.5	193.8	178.8	161.5	132.9	3
2007-11LdRC	6/24/2010	193.4	194.7	196.8	198.1	195	190.9	192.3	199.3	194.2	162.6	148.3	134.2	4
2007-11LdRC	6/25/2010	192.9	194	194.2	190.2	190	188.3	190.1	193.7	188.3	179.4	155.5	137.2	5
2007-11LdRC	6/26/2010	181.9	183.3	184.5	185.7	187.5	187.8	186.3	192	185.8	172.8	155.5	137.2	6
2007-11LdRC	6/27/2010	174.6	174.2	174.8	175.8	178.4	180.8	184.1	190.3	187.6	173.2	153.1	133	7
2007-11LdRC	6/28/2010	193.1	192	191.8	190.5	189.9	189.4	190.2	199.1	197.3	177.3	157.8	134.3	1
2007-11LdRC	6/29/2010	193.7	192.7	195.1	194	193.8	193.1	193.2	201.4	197.5	184.7	157.8	136.7	2
2007-11LdRC	6/30/2010	198.4	197.8	197.4	196	194	192.8	194.6	201.1	198.2	185.3	161.9	142.7	3
2007-11LdRC	7/1/2010	201.5	199.3	200	198	198.2	196.6	195.1	205.8	202.3	182.8	153.6	131.2	4
2007-11LdRC	7/2/2010	192.9	195.9	200.3	202	199.7	196.6	192.6	196.9	193.5	178.7	153.4	133.1	5
2007-11LdRC	7/3/2010	174.4	176.1	177.4	179.2	182	182.6	184.1	190.7	188.1	172.3	148.3	130	6
2007-11LdRC	7/4/2010	179.5	179.7	180.7	183.2	186.2	186.8	182.5	182	173.8	172.4	150.8	133.5	7
2007-11LdRC	7/5/2010	179.5	179.7	180.7	183.2	186.2	186.8	182.5	182	173.8	172.4	150.8	133.5	1
2007-11LdRC	7/6/2010	204.7	205.8	206	203.7	201.3	199	200.8	209.8	206.7	184.4	154.5	132.5	2
2007-11LdRC	7/7/2010	199	201.5	203.2	205	203.5	201.3	199.8	209.8	204.8	182.5	157	136.8	3
2007-11LdRC	7/8/2010	197.4	195.6	195.3	195.1	193.2	193.5	196.4	210.5	198	181.6	152.8	131.1	4
2007-11LdRC	7/9/2010	199.2	197.9	201.3	196.7	194.3	192.1	193.1	199.3	194.5	177.5	152.4	133.5	5
2007-11LdRC	7/10/2010	185.5	183.8	182.8	185.2	186.1	187.9	187.4	194	191.5	175.9	150.7	131.6	6
2007-11LdRC	7/11/2010	174.8	174.4	172.2	174	179	184.3	185.5	192.9	189.6	174	148.5	129.8	7
2007-11LdRC	7/12/2010	201.5	205	206.7	204	200.3	199	199.3	211	202.1	182.9	153.8	131.7	1
2007-11LdRC	7/13/2010	197.5	197.9	199.8	202	201.5	198.5	199.8	210	205.7	183.7	152.6	132	2
2007-11LdRC	7/14/2010	199.5	199.2	203.5	204	203.3	202	200.2	209.8	203	184.6	154.3	132.2	3
2007-11LdRC	7/15/2010	201.5	204	206.4	207.9	205.2	202	201.7	210.7	207.7	186.1	157.5	134.3	4
2007-11LdRC	7/16/2010	195.6	197.9	197.2	195.3	195.9	192.9	192.3	200.7	194.8	167.3	154.8	133.9	5
2007-11LdRC	7/17/2010	187	188.5	188.2	187.4	192.1	192.7	190.4	199	193.2	179.2	152.3	132.6	6
2007-11LdRC	7/18/2010	174.7	177.4	175.9	178.7	181.7	185.6	187.4	198	195	176.1	150.5	130.5	7
2007-11LdRC	7/19/2010	201.2	205.2	202.3	202.3	203.5	200.2	199.3	210.5	206	185	155.1	133.3	1
2007-11LdRC	7/20/2010	204.3	204.3	206.2	204	200.5	197.9	197.7	208.1	203.2	182.8	153.4	132.4	2
2007-11LdRC	7/21/2010	194.8	195.4	194.5	197.2	196.2	196.3	197.2	207.6	203.8	181.7	152	130.3	3
2007-11LdRC	7/22/2010	187.6	189.8	192.1	192.3	193.5	192.3	192.3	207	200.8	181.9	151.5	130.9	4
2007-11LdRC	7/23/2010	199	197.5	200.3	198.4	198.2	194	192.1	200.5	196.3	183.1	154.8	134	5
2007-11LdRC	7/24/2010	186.1	187.3	187.9	189.8	193.2	194.3	192.9	201	194.6	181.1	154.5	134.4	6
2007-11LdRC	7/25/2010	177.8	177.4	180.4	183.1	186.8	189.8	193.2	205.2	199.2	181.1	152.8	132.2	7
2007-11LdRC	7/26/2010	211.4	214.7	213.8	214	211.4	206.9	205	217.9	211.5	193.1	160.5	137.6	1
2007-11LdRC	7/27/2010	205.8	209.3	213.8	213.3	212	205.3	204.5	214.7	209.8	189.6	155.4	132.7	2
2007-11LdRC	7/28/2010	202.1	206	207.4	202.6	205	203	200.7	210.1	201.3	182.3	154.9	133.6	3
2007-11LdRC	7/29/2010	204.8	202.8	206.2	208.9	206.7	204.7	207.4	216.3	207.9	186.7	154.6	133.1	4
2007-11LdRC	7/30/2010	199.3	198	198.4	197.5	196.4	192.3	191	198	194.5	178.8	154.1	134.3	5
2007-11LdRC	7/31/2010	182.9	183.7	186.1	184.7	187.6	190.5	189.5	197.4	193.7	179	152.5	133.5	6
2007-11LdRC	8/1/2010	181.6	182.7	183.6	185.2	186.8	188.7	190.4	202.5	199.6	183.6	156.9	136.1	7
2007-11LdRC	8/2/2010	203.9	203.7	205.7	206.3	205	202.2	203.6	217	210.1	192.1	162.7	139.8	1
2007-11LdRC	8/3/2010	206	206.4	208.5	209	206.7	203.7	205.7	216.8	210.3	192.9	161.7	139.2	2
2007-11LdRC	8/4/2010	205.1	207.8	207	205.7	203	201.4	199.6	207.8	202.2	186.5	160.6	137.5	3
2007-11LdRC	8/5/2010	197	199.4	201.5	204.9	202.5	201.5	199.7	208.1	202.8	187.6	158	136.5	4
2007-11LdRC	8/6/2010	197.1	200.7	202.1	203.9	203.5	200.9	199.8	207.4	200.8	186.3	163.1	141.2	5
2007-11LdRC	8/7/2010	187.2	189.1	190.4	191.2	193.2	194.9	197.5	205.3	198.6	184.5	161.7	140.5	6
2007-11LdRC	8/8/2010	185.3	186.6	185.4	186.8	189.6	194.4	197	207.4	198.6	181.6	159.2	139.2	7
2007-11LdRC	8/9/2010	213.9	216.1	217.9	218.3	215.1	211.9	214.3	224.9	216.8	194.1	164.7	141.6	1
2007-11LdRC	8/10/2010	214	215.9	218.6	218.9	214	206.8	207.1	217.9	211.7	190.3	162.5	140.5	2
2007-11LdRC	8/11/2010	212.4	215.4	215.6	215.5	213	212.1	211.9	222.8	213.3	195.3	167.2	142.9	3
2007-11LdRC	8/12/2010	209.3	212.3	211.4	212.1	209.1	208	208.5	220.1	212.1	191.6	162.5	139.6	4
2007-11LdRC	8/13/2010	203.5	204.3	206.7	209.5	209	203.9	201.4	210.1	201.6	183.4	161.9	140	5
2007-11LdRC	8/14/2010	186.6	188.5	188.5	191.6	195.3	196.8	197.1	206	196.3	181.5	157.9	138.4	6
2007-11LdRC	8/15/2010	178.8	179.7	183.4	183.4	186.6	190.4	194	205.3	197.5	180.3	157	135.9	7
2007-11LdRC	8/16/2010	211.1	209.7	209.7	206.7	207.1	206	208.3	222.2	211.7	189.9	162.3	139.6	1
2007-11LdRC	8/17/2010	205.7	207.4	204.4	203.5	202.9	200.9	201.9	213.5	204	185.4	159.8	140.1	2
2007-11LdRC	8/18/2010	203.7	207.7	205.3	206.1	205	202.5	202.5	214.5	205.4	186.1	160.2	138.7	3
2007-11LdRC	8/19/2010	206	208.4	210.3	210	206.6	200.1	201.4	211.1	202.5	185.8	161.7	146.2	4
2007-11LdRC	8/20/2010	199.8	200	200.9	201.1	202.2	201.4	212.1	211	200.1	181.8	163.1	143.4	5
2007-11LdRC	8/21/2010	187.4	188.5	188.9	188.7	189.7	189.6	188.4	199.3	190.5	176.9	155	135.8	6
2007-11LdRC	8/22/2010	176.1	178.4	180.6	183.5	185.9	187.8	190.4	202.5	195.7	175.7	153.1	134.3	7
2007-11LdRC	8/23/2010	203.7	206.3	203.7	206.8	203.2	202.3	204.2	217.7	205	183.6	155.3	135.2	1
2007-11LdRC	8/24/2010	198.9	202.9	200.4	197.2	196.4	192.4	196.6	211.9	199.7	179.9	153	132.2	2
2007-11LdRC	8/25/2010	198.7	201.6	203.7	203.9	201.1	200.3	201.9	212.7	201.4	182	155.4	135.4	3

SetID	Date	HR13	HR14	HR15	HR16	HR17	HR18	HR19	HR20	HR21	HR22	HR23	HR24	DOW
2007-11LdRC	8/26/2010	203	203.9	205.1	206.1	205.3	200.1	203.9	217.4	205	184.8	157	136.6	4
2007-11LdRC	8/27/2010	202.3	203.9	205.3	208.7	206.3	201.1	199.2	212	201.6	186.5	163.7	142.2	5
2007-11LdRC	8/28/2010	189.3	188.4	192	192.8	194	191.6	192.8	198.5	189.2	174.8	154.5	137	6
2007-11LdRC	8/29/2010	176.3	174.4	175	176	179.4	183.1	189.7	203.6	193	177.1	151.6	132.5	7
2007-11LdRC	8/30/2010	205.8	206.8	209.7	210.7	205.8	203	208.7	221	207.8	187.6	159.2	138.5	1
2007-11LdRC	8/31/2010	208.5	210.6	211.7	210.7	204.6	201.2	207.4	218.7	206.6	186.2	157.7	137.6	2
2007-11LdRC	9/1/2010	203.2	202.1	204.6	203.9	203	200.8	204.3	217.8	204.8	183.8	154.4	134.9	3
2007-11LdRC	9/2/2010	202.4	206.9	206.3	205.2	202.6	201.4	203.2	216.7	203	182.4	154.3	133	4
2007-11LdRC	9/3/2010	201.4	206	207.2	206.9	204.1	197.2	196.8	208.5	192.4	180.3	157.1	137.8	5
2007-11LdRC	9/4/2010	190	191.8	192.1	192.4	191.1	190.7	195.2	200.7	190.8	176.2	153.8	135.3	6
2007-11LdRC	9/5/2010	172.5	170.5	171.1	172.1	175.7	179.5	186.3	200.7	189.7	173.3	147.6	128.9	7
2007-11LdRC	9/6/2010	189.4	190.4	190.3	190	192.5	194.9	198.9	213.9	200.1	179.1	152.9	133.8	1
2007-11LdRC	9/7/2010	199.4	204.8	202.1	201.5	200.7	195.3	202.6	214.3	198.5	177.2	150.2	130.6	2
2007-11LdRC	9/8/2010	197.3	198.6	201.8	202.3	200.7	195.8	199.7	212.5	203.8	175.8	150.4	131.2	3
2007-11LdRC	9/9/2010	198.5	200.4	203	204.3	201.8	195.5	200.7	213.4	199.7	179.7	151.4	130.8	4
2007-11LdRC	9/10/2010	200.4	201	202.7	206.3	203.5	197.3	202.4	207.8	193.5	179.3	154.7	139.1	5
2007-11LdRC	9/11/2010	192.6	192.8	193.8	193.6	195.2	193.2	195.3	201	189.3	175.6	154.9	136.8	6
2007-11LdRC	9/12/2010	178.7	179.9	181.6	182.1	185.5	185.5	193.1	206	191.7	173.9	149.9	131	7
2007-11LdRC	9/13/2010	203.9	202.1	200.4	198.1	195.5	193.2	201.3	211	195.3	176.5	149.7	132	1
2007-11LdRC	9/14/2010	202.9	201.8	206	204.6	201.5	198.8	208.2	218.4	203.2	183.7	154.3	133.9	2
2007-11LdRC	9/15/2010	195.2	198.6	202.7	200.5	196.9	194.1	200.5	211.9	199.4	168.5	152.9	132.1	3
2007-11LdRC	9/16/2010	196.2	194.9	193.1	193.6	191.4	188.6	202.9	209.1	197.2	173	149.7	131.2	4
2007-11LdRC	9/17/2010	197.8	198.9	195.5	194.2	189.6	185.7	196.9	197.6	184.8	169.5	150.8	132.8	5
2007-11LdRC	9/18/2010	178.8	180.4	179.2	180.6	182.6	184.5	187.6	194.2	181.2	163	145.3	132.9	6
2007-11LdRC	9/19/2010	170.4	171.5	171.9	172.3	175.4	177.9	187.9	194.1	179.9	163.4	143.2	126.8	7
2007-11LdRC	9/20/2010	189.7	192.4	192.5	192.1	191.7	188.7	200.5	208.1	192.5	171.8	145.6	128	1
2007-11LdRC	9/21/2010	192.5	195.8	196.2	197.8	195.1	190.8	201.3	208.7	191.4	163.8	146.2	128.7	2
2007-11LdRC	9/22/2010	193.2	190.5	193.5	194.6	193.4	192.4	202.4	206.3	189	169.6	146.9	129.5	3
2007-11LdRC	9/23/2010	190.7	192.4	192.4	193.4	192.9	189.4	202.3	207.5	195.1	176	150.5	132.5	4
2007-11LdRC	9/24/2010	202.7	201.8	199.8	197.1	193.8	190	199.4	200.7	187.4	172.3	151.9	134.3	5
2007-11LdRC	9/25/2010	191.5	189.9	191.1	193.9	195.9	196.5	206	207.2	194.6	179.6	152.9	134.5	6
2007-11LdRC	9/26/2010	184.4	186.6	187.4	186	188.5	190.7	202.4	207.9	192.5	176.1	149	131.2	7
2007-11LdRC	9/27/2010	193.8	194.9	196.5	194.8	192.8	191.1	202.9	208.1	192.4	172	147.6	128.6	1
2007-11LdRC	9/28/2010	189.3	188.9	189.4	187.8	187.8	185.3	197.1	201.1	185.6	168.5	142.4	125.8	2
2007-11LdRC	9/29/2010	191.1	191	192.1	190.3	188.7	187.5	197.6	199.4	185.9	169.6	145.4	126.9	3
2007-11LdRC	9/30/2010	189.7	191.9	189.4	185.9	180.9	181.7	188.9	194.1	187.9	166.6	145.3	128.7	4
2007-11LdRC	10/1/2010	194.1	197.3	203.7	201	199.3	190.3	203.1	195.4	184.2	167.5	146.8	131.1	5
2007-11LdRC	10/2/2010	188.2	189.4	185.6	186.9	185.9	186.5	196.5	196.8	182.3	165.8	146.1	132.2	6
2007-11LdRC	10/3/2010	182.7	183.3	181.2	183.5	184.5	184.6	200.1	201.2	186.1	168	145.5	128.9	7
2007-11LdRC	10/4/2010	198.2	200.4	197.7	194.5	191.1	193.6	209.3	210.6	195	172.5	146	126.8	1
2007-11LdRC	10/5/2010	192.9	197.7	197.7	196	189.4	188	207.2	210.8	192.7	170.9	146.6	129.2	2
2007-11LdRC	10/6/2010	193.9	199	191.4	197.4	196.7	195.3	210.8	212.1	194.4	174.4	148	129.4	3
2007-11LdRC	10/7/2010	197	197.1	193.3	195	193.5	195.9	206.1	204.8	193.3	178.5	150.8	136.7	4
2007-11LdRC	10/8/2010	196.8	196.5	200.2	201.3	199.4	194.5	205.8	201.9	185.3	169.6	147.6	129.5	5
2007-11LdRC	10/9/2010	179.6	180.8	182.6	183.5	187.5	190	202.9	200.2	182.2	163.4	145.4	130.3	6
2007-11LdRC	10/10/2010	173.6	174.8	176	178	182.9	187.7	193.9	194.4	188.5	180.6	144.1	126.9	7
2007-11LdRC	10/11/2010	196	197.4	199.9	199.3	196.8	199.1	210.6	207.9	196	175.2	146	128.2	1
2007-11LdRC	10/12/2010	199.3	202.7	203.4	203.1	200.4	199.6	216.9	211.4	195.6	174.3	147.6	128.2	2
2007-11LdRC	10/13/2010	194.7	193.5	194.7	194.5	194.5	194.2	212.6	209.8	191.1	172.5	145	127.6	3
2007-11LdRC	10/14/2010	192	193.9	193.9	195	193.3	193.2	211.1	207.5	190.5	171.9	146.1	127.4	4
2007-11LdRC	10/15/2010	192.3	194.7	197	198.7	196.7	189.7	203.1	197.4	181.9	166.4	146.7	129	5
2007-11LdRC	10/16/2010	176.3	178.1	179.5	181.2	184.9	184.6	198.8	193	178.9	162.8	144.5	128.9	6
2007-11LdRC	10/17/2010	173.1	179.5	187.4	189.6	191.5	196.7	214.9	209.6	192.1	171.6	148.5	130	7
2007-11LdRC	10/18/2010	206.6	208.7	210.1	210.5	205.8	200.1	221.2	220.7	199.1	175.4	148.8	129.7	1
2007-11LdRC	10/19/2010	197.1	196.5	195.6	194.5	195.9	198.8	215.4	211.3	192.4	170.8	145.4	126.5	2
2007-11LdRC	10/20/2010	201.5	197.4	196.5	195.6	196.2	196.7	221.4	216.6	197.7	176	149	129.2	3
2007-11LdRC	10/21/2010	205.1	208.5	211.8	212.8	208.5	198	216.8	222.9	206.7	178.1	150.3	132.3	4
2007-11LdRC	10/22/2010	200.8	203.7	205.8	205.4	202.3	199.3	212.3	203.1	188.1	172.1	150.3	132.5	5
2007-11LdRC	10/23/2010	183.3	184.2	185	185	187.4	190.9	205.3	190.5	180.8	165	146.3	127.8	6
2007-11LdRC	10/24/2010	165.8	163.3	163.3	166.6	172.1	182.7	201.9	194.8	178.5	160.7	138.9	122.8	7
2007-11LdRC	10/25/2010	193.8	195.7	195.3	194.4	190.6	193.5	217.6	211.8	192.4	170.4	143.7	125	1
2007-11LdRC	10/26/2010	191.7	194.2	196.7	200.1	199.6	197.6	218.1	208	193	172.3	144.1	124.5	2
2007-11LdRC	10/27/2010	192.3	197.3	202.7	202.6	200.8	197	217.4	210.1	191.7	170.8	144.1	125.8	3
2007-11LdRC	10/28/2010	189.4	187.4	194.8	196.7	196	195.3	216.8	209	190.5	171.1	147.5	128.1	4
2007-11LdRC	10/29/2010	192.7	195.1	192.6	195.1	188.5	202.6	196.7	190.5	176.2	164.6	146.8	134.9	5
2007-11LdRC	10/30/2010	172	171.3	178.5	172.7	175.4	193.5	201.2	181.3	167.1	158.1	142.1	131.3	6
2007-11LdRC	10/31/2010	171.9	172.9	173.2	174.8	182	198.8	212.6	194.2	174.1	165.8	145.1	134	7
2007-11LdRC	11/1/2010	195.1	199.8	197.8	199.9	197.1	193.8	189.8	182.6	173.6	165.9	150.7	138.1	1
2007-11LdRC	11/2/2010	194.3	194.3	194.1	193.7	192.2	195.6	214.9	206.6	190.2	170.7	146.4	133.7	2
2007-11LdRC	11/3/2010	190.2	192	191.5	193.6	193	193.6	212	204.1	189.6	171.3	147.1	127.9	3
2007-11LdRC	11/4/2010	187.8	190	189.8	187.6	187.7	190.4	209.8	201.2	187.3	170.1	147.8	127.5	4
2007-11LdRC	11/5/2010	187.2	188.9	190.3	191.2	189.1	189.1	204	195	182.7	168.4	149.8	131.4	5
2007-11LdRC	11/6/2010	175.7	174.3	174.2	175.4	177.6	183.9	197.3	188.2	175.2	162.9	146.6	129.7	6
2007-11LdRC	11/7/2010	172.4	172.7	172.1	172.7	173.8	180.2	198.1	191.5	179.2	163.7	144.1	124.8	7
2007-11LdRC	11/8/2010	186.4	187	187.2	187.5	187	189.2	209.8	202.9	188.2	170.2	147.1	128.8	1
2007-11LdRC	11/9/2010	189.7	190	187.7	188.7	189.7	195.5	213.4	204.5	189.4	171.5	148.1	127.4	2
2007-11LdRC	11/10/2010	187	186.4	187.6	188.2	187.2	189.8	207.7	200.8	184.5	169.4	147	128.3	3
2007-11LdRC	11/11/2010	184.2	184.5	185.4	185.9	185.2	187.8	203.6	195.1	181.7	168	145.5	126.6	4
2007-11LdRC	11/12/2010	179.4	178	178.5	181.8	184.4	187.7	202.1	192.1	181.6	167.7	146.7	128.2	5

SetID	Date	HR13	HR14	HR15	HR16	HR17	HR18	HR19	HR20	HR21	HR22	HR23	HR24	DOW
2007-11LdRC	11/13/2010	172	176.6	173.8	177.4	181.2	185.8	199.7	191.2	179.7	164.4	134.3	127.6	6
2007-11LdRC	11/14/2010	171.3	172.9	173.5	174.2	177.4	186.9	201.2	191.9	178.1	158.5	138.3	123.9	7
2007-11LdRC	11/15/2010	184.7	185.4	187	186.9	186.6	196.8	203.8	201.1	191.6	175.7	150.4	124.7	1
2007-11LdRC	11/16/2010	193.1	191.9	192	189.4	188.2	189.7	209.2	202.4	186.4	169.7	146.3	126.1	2
2007-11LdRC	11/17/2010	182.9	180.9	185.2	186.8	184.6	188.5	208.1	200	184.2	170.6	144.1	125.6	3
2007-11LdRC	11/18/2010	183.7	183.3	186.3	184.7	183.8	188.2	205.7	195	183.1	169.4	146	123	4
2007-11LdRC	11/19/2010	180.3	179.2	180.5	181.3	179.8	185.1	197.7	190	182	168.1	147.7	128.6	5
2007-11LdRC	11/20/2010	175.9	170.5	175.3	180.2	180.8	187.3	193.7	191	180.3	167	146.5	135.2	6
2007-11LdRC	11/21/2010	173.2	172.6	175	179.4	181.5	187.3	205.7	199.2	181.9	165.3	144	126.6	7
2007-11LdRC	11/22/2010	193.8	190.8	192	190.8	193.1	196.2	218.6	212	197.1	177.8	152.4	132.5	1
2007-11LdRC	11/23/2010	195.6	195.3	196.8	194.7	194.5	202.5	221.8	213.2	186.5	182.9	156.1	135.6	2
2007-11LdRC	11/24/2010	182.9	180.9	185.2	186.8	184.6	188.5	208.1	200	184.2	170.6	144.1	125.6	3
2007-11LdRC	11/25/2010	189.2	189	186	186.6	183.3	180.6	183.1	177.4	168.1	157.6	143.5	126.4	4
2007-11LdRC	11/26/2010	184.7	185	187.2	188.5	186.8	200.4	204.2	188.3	172.7	160.9	143.2	131.9	5
2007-11LdRC	11/27/2010	177.3	176.7	175.1	180.5	180.8	200.8	200.5	185.3	176.2	162.4	145	135.2	6
2007-11LdRC	11/28/2010	166.5	164.7	162.9	164.9	169.2	193.4	197.8	183.3	165.2	153.8	139.7	127	7
2007-11LdRC	11/29/2010	182.5	185.8	183.1	181.2	192.4	188.5	207.9	200	185.4	164.1	142.9	130.1	1
2007-11LdRC	11/30/2010	186.9	188.2	180.6	183.9	183.1	189.4	206.9	201.5	183.7	165.8	140.9	122.6	2
2007-11LdRC	12/1/2010	179.9	183.2	186.5	187.1	185.6	192.2	213	204.2	184.3	159.1	139.4	122.2	3
2007-11LdRC	12/2/2010	185	183.1	185.4	185.8	185.1	190.7	212.3	205.2	186.8	167.1	141.4	122.7	4
2007-11LdRC	12/3/2010	180.8	183.4	185.6	187.2	185.8	189.6	206.6	196.8	180.4	167.1	145.9	124.3	5
2007-11LdRC	12/4/2010	169	171.3	171.5	172.3	173.4	180.7	196.5	188.5	175.4	161.8	141.3	124.9	6
2007-11LdRC	12/5/2010	162.6	160	160.8	163.3	167.9	182.6	203.1	196.8	170.9	152.4	135.7	116.4	7
2007-11LdRC	12/6/2010	178.7	180.3	179.3	177.5	176	183.5	207.6	198.4	182.4	163.5	140.6	119	1
2007-11LdRC	12/7/2010	175.3	175.1	175	174.5	173.8	178.3	199.1	193.1	177.1	160.2	137.3	120.8	2
2007-11LdRC	12/8/2010	167.4	170.8	170.8	168.5	170	181.2	194.7	193.8	178.1	159.7	139.4	121.2	3
2007-11LdRC	12/9/2010	174.1	177.6	177.3	177.7	177.5	183.4	199.7	199.1	183.2	165.2	140.9	123.7	4
2007-11LdRC	12/10/2010	176.2	175.1	176.6	177.7	178.3	183.2	200.2	189.2	174.5	160.5	143	124.4	5
2007-11LdRC	12/11/2010	163.5	161.4	162.1	163.3	167	174.2	191	181.5	172.4	157.3	139.7	122.4	6
2007-11LdRC	12/12/2010	157.8	157.1	158.1	160.9	164.6	175.4	198.7	193.8	178	157.2	135.9	118.8	7
2007-11LdRC	12/13/2010	171.3	171.8	172.8	172.9	173.7	178.8	203.9	198.3	180.3	159.9	136.9	121.8	1
2007-11LdRC	12/14/2010	170.1	168.2	161.4	167.9	168.9	172.8	197.8	187.8	177.6	155.4	135.6	118.5	2
2007-11LdRC	12/15/2010	167.2	169	171.8	171.3	171	177.2	198.1	192.2	177.9	160.3	137.9	119.2	3
2007-11LdRC	12/16/2010	167.4	167.2	168.7	170.2	170.9	177	199.1	192.4	179.1	163.7	139.1	120.6	4
2007-11LdRC	12/17/2010	169	169.6	169.6	169.6	170.6	175.9	182.8	181.6	173.8	155.9	131.9	121.2	5
2007-11LdRC	12/18/2010	160.6	156.7	157.8	159.3	162.8	170	189.2	183.2	169.2	157	136.9	121.9	6
2007-11LdRC	12/19/2010	152.6	152	154.8	156	162	175.3	199.6	197.4	185.8	169.4	145.1	125.7	7
2007-11LdRC	12/20/2010	174.9	175.6	177.6	177.2	176.4	189.7	199.3	197	188.3	174	143.5	120.7	1
2007-11LdRC	12/21/2010	178	178	180.1	180.4	183.1	190.3	216.2	208.5	192.4	176	146.2	125.1	2
2007-11LdRC	12/22/2010	180.5	180.5	183.4	184.5	185.4	192.4	215.4	208.7	192.4	175.5	146.9	126.8	3
2007-11LdRC	12/23/2010	181.2	183.5	182.1	180.4	182.3	191.5	214.3	207.9	191.8	175	152.6	124.4	4
2007-11LdRC	12/24/2010	174.6	174.3	174.2	173.6	173.1	181.3	200.6	195.4	181.2	167.9	145.5	126.7	5
2007-11LdRC	12/25/2010	147.5	147.1	149.5	152.6	156.5	164.9	178.9	175.1	164.1	153.4	136.7	121.2	6
2007-11LdRC	12/26/2010	147.5	147.1	149.5	152.6	156.5	164.9	178.9	175.1	164.1	153.4	136.7	121.2	7
2007-11LdRC	12/27/2010	165.7	164.1	165.2	167.9	172.3	183.2	210.5	209.9	192.2	171.9	146.1	126.4	1
2007-11LdRC	12/28/2010	182.4	180.8	179.6	179.7	183	190.7	220.6	218.1	196.1	174.3	149.4	128.6	2
2007-11LdRC	12/29/2010	186.4	186.9	184.6	188.6	195.7	207.3	222.1	212.3	192.7	177.3	154.2	135.6	3
2007-11LdRC	12/30/2010	184.6	186.2	190.1	193.8	194.2	207	222.7	211.9	189	175.9	155.1	138.8	4
2007-11LdRC	12/31/2010	188.9	194.9	191	193.4	197	209.9	218.4	209.3	189.8	166.1	144.6	127.3	5

SetID	Date	HR13	HR14	HR15	HR16	HR17	HR18	HR19	HR20	HR21	HR22	HR23	HR24	DOW
Based on Hour Ending		13	14	15	16	17	18	19	20	21	22	23	24	
Total MW by Hour		66,842	67,039	67,246	67,563	67,784	68,463	71,737	72,890	68,691	62,347	53,547	46,512	
Total Obs by Hour		365	365	365	365	365	365	365	365	365	365	365	365	
Off Peak Hrs MW											62,347	53,547	46,512	
Total Off Peak Obs by Hour											365	365	365	
Mid Peak Hrs MW		66,842	67,039	67,246	67,563	67,784	18,894	19,742	20,020	18,922				
Mid Peak Obs by Hour		365	365	365	365	365	104	104	104	104				
Priority Peak Hrs MW							49,570	51,995	52,869	49,769				
Priority Peak Obs by Hour							261	261	261	261				
Total MW Check		0.00	0.00	0.00	0.00	0.00	0.00	0.00	0.00	0.00	0.00	0.00	0.00	
Total Obs Check		0	0	0	0	0	0	0	0	0	0	0	0	

Total Avg. MW
Off Peak Avg. MW
Mid Peak Avg. MW
Priority Peak Avg. MW

SetID	Date	HR1	HR2	HR3	HR4	HR5	HR6	HR7	HR8	HR9	HR10	HR11	HR12
2007-11LdRC	1/1/2011	133	125.7	116.9	113	110.6	115.7	120.1	128.7	146.6	168.6	183.8	183.7
2007-11LdRC	1/2/2011	114.6	107.2	103.3	102.5	106.9	111.8	120.2	133.9	153.5	172.2	181.7	179
2007-11LdRC	1/3/2011	107.4	102.7	100.4	101.2	104.7	115.5	136.3	151.8	166.4	180.8	182.4	180.2
2007-11LdRC	1/4/2011	108.5	102.5	98.4	99	102.8	117.9	134.4	148.3	161.4	171.6	174.9	175.4
2007-11LdRC	1/5/2011	107.4	103.3	100.5	99.5	102	114	133	148	160.2	170.5	175.1	174.6
2007-11LdRC	1/6/2011	111.1	103.9	100.2	100.8	104.4	116.3	135.8	149.5	163.6	177.7	180.8	180.3
2007-11LdRC	1/7/2011	110.4	104.6	101.6	101.2	103.9	116	137.3	151.5	165.1	176.4	178	177.7
2007-11LdRC	1/8/2011	112.4	105.3	101.3	100	103.2	109.7	117.8	135.9	154.4	166.2	169.6	168.2
2007-11LdRC	1/9/2011	113.1	106.7	104.8	103.6	106	110.1	114.9	126.6	146.7	160.6	168.7	169.3
2007-11LdRC	1/10/2011	105.7	100.9	99.1	98.2	102.6	107.4	136	150.7	163.4	173.7	175.3	173.6
2007-11LdRC	1/11/2011	106.8	101.7	99.2	99.2	103.2	114.4	136	148.5	161.4	170.8	174.8	174.7
2007-11LdRC	1/12/2011	103.9	99.1	97.1	97.2	100.9	112.6	133.8	146.4	155.6	167.6	170	168.8
2007-11LdRC	1/13/2011	105.7	100.6	97.9	98.8	102.1	116.2	139.3	153	165.2	175.7	176.5	175.3
2007-11LdRC	1/14/2011	109.6	104.6	103	103.9	108	120.6	142.1	158.7	167.8	180.9	182.8	181.2
2007-11LdRC	1/15/2011	115.2	109.8	108.7	107.5	111.2	117.9	125.4	141	163.1	176.2	176.5	177.1
2007-11LdRC	1/16/2011	117.1	110.7	108.7	108.2	109.3	114.9	125.9	140.1	158.4	172.2	177.7	177.5
2007-11LdRC	1/17/2011	119.7	114.8	109.8	110	113.3	123	137.9	159.3	176	190.7	194.1	191.1
2007-11LdRC	1/18/2011	116	111.3	108.2	107.9	111.3	122.6	147.1	163.1	175.7	186.7	187.4	185.4
2007-11LdRC	1/19/2011	109.9	103.6	101.1	100.9	106	118.4	141.8	156.8	168.7	182.9	183.9	184.2
2007-11LdRC	1/20/2011	108.7	106.1	103.2	102.2	106.8	119	144	158.8	171.6	183.5	182.8	184
2007-11LdRC	1/21/2011	110.8	106.4	103.6	102.2	107.2	117.6	136.9	156	173.2	186.2	190.7	188.2
2007-11LdRC	1/22/2011	109.9	102.5	99.7	99.2	102.5	107.6	117.4	131.8	150.3	162.8	164.5	164.5
2007-11LdRC	1/23/2011	107	101.6	99.3	98.4	100.8	107	116	128.5	147.8	160.7	166.2	167.4
2007-11LdRC	1/24/2011	110	102.7	101.4	101.8	105.4	116.7	140.8	153.7	168.8	182.1	187.1	186.4
2007-11LdRC	1/25/2011	111.3	106	102.4	102.1	105.1	119.3	141.9	153.5	168.8	183.2	189.1	185.4
2007-11LdRC	1/26/2011	109.6	104	101.5	100.3	104.4	115.1	140.1	152.5	167.4	180.6	186.4	186.3
2007-11LdRC	1/27/2011	111.9	105.9	103.4	102.5	107	118.5	141.3	155.5	170.5	178.7	181.1	174.8
2007-11LdRC	1/28/2011	112.9	106.8	102.5	102.2	104.7	115.3	138.7	152.3	166.7	180.9	184.5	184.9
2007-11LdRC	1/29/2011	111.4	105.9	103	101.8	103.9	110.1	119.8	134.6	152	167	170.6	171.1
2007-11LdRC	1/30/2011	110	104.4	101.5	100.3	101.9	108.2	145.6	165.6	174.1	182.7	167.8	171.3
2007-11LdRC	1/31/2011	109.5	104.4	101.3	102.9	106	116.8	140.4	153.9	167.6	179	183.1	184
2007-11LdRC	2/1/2011	113.4	108	103.7	103.2	106.8	116	139.6	155.2	167.6	174.8	176.7	175.2
2007-11LdRC	2/2/2011	106.4	102.8	100.1	99.3	104.3	115.3	139.1	154	165.3	173.9	176.2	174.5
2007-11LdRC	2/3/2011	106.2	101.3	98.5	99	103.6	115.1	137.7	152.1	162.8	171.6	174.2	171.6
2007-11LdRC	2/4/2011	105.7	102.2	100.3	99.9	103.4	114.4	138.6	154.5	166.6	176.7	178.8	177.4
2007-11LdRC	2/5/2011	109.6	105	101.3	101.3	104.3	110.2	121.9	138	158.9	172.5	174.5	174.8
2007-11LdRC	2/6/2011	111.7	105.8	103	101.8	102.2	108.9	116.6	130.1	150.4	163.4	172.6	176.9
2007-11LdRC	2/7/2011	111.5	106.6	103.9	102.8	106.2	117.5	140.4	155.8	172.5	185.8	190.3	192.6
2007-11LdRC	2/8/2011	113.5	108.4	106.2	104.7	107.8	118.2	139.2	157.3	173.4	181.9	185.8	186.4
2007-11LdRC	2/9/2011	111.6	108	105.3	104.1	106.8	117.7	141.1	157.9	167.8	178	181	185.2
2007-11LdRC	2/10/2011	108.7	106.8	105	104.4	107.8	117.6	139.6	156.1	170.5	183.1	186	182.8
2007-11LdRC	2/11/2011	111.2	106.7	103.3	102.3	104.5	115.6	137.7	152.7	167.4	177.1	178.1	180.9
2007-11LdRC	2/12/2011	110.5	105	101.4	100.4	102.3	108.4	118.8	133.8	147.6	165.8	168	166
2007-11LdRC	2/13/2011	110.1	103.9	100.8	99.1	101.6	106.7	115.7	130.3	147.6	158.5	161.1	159.6
2007-11LdRC	2/14/2011	105	101.6	99.2	99.6	102.3	112.4	134.4	140.5	162.4	171.6	173.5	171.3
2007-11LdRC	2/15/2011	106	101.6	98.9	98.3	102.3	113.7	134.7	151.8	166	176.2	174.9	171.8
2007-11LdRC	2/16/2011	110.2	103.2	100	99.7	102.4	113.1	135.8	151	162.5	172.8	174.5	175.2
2007-11LdRC	2/17/2011	108.2	104.3	101.7	99.5	103	113.8	139.3	151.5	165.4	173.9	178.3	178.3
2007-11LdRC	2/18/2011	108.5	105	102.5	101.3	105.1	114.5	137.5	152.4	165.7	175.2	177.9	177.2
2007-11LdRC	2/19/2011	111.6	106.5	103.3	101.6	103.3	108.5	119.9	136.1	154.7	166.3	168.1	165.3
2007-11LdRC	2/20/2011	107.7	103.1	100.8	99.7	101.9	107.1	115.4	128.9	146.4	157.3	160.2	159
2007-11LdRC	2/21/2011	108	102.6	100	98.9	101.3	109.2	121.6	134.5	152.4	167	170.1	167.1
2007-11LdRC	2/22/2011	107.3	102.3	100.3	98.7	103	113.1	134	147.5	161.9	173.4	176	174.8
2007-11LdRC	2/23/2011	110.2	104.7	101.8	100.9	104.5	115.2	136.9	151.4	166.4	178.5	182.2	179.8
2007-11LdRC	2/24/2011	110.3	105.3	102.6	102.2	105.4	117.4	141.5	152.7	170.2	177.6	184.2	183.2
2007-11LdRC	2/25/2011	111.2	105.9	102.7	102	104.8	116.6	139.3	153	170.7	182.1	184.3	183.5
2007-11LdRC	2/26/2011	111	106.2	102.5	100.7	103.1	108.7	121.9	135.3	155.8	169.4	175.4	170.2
2007-11LdRC	2/27/2011	110.9	106.2	102.3	100.9	103.7	109.1	117.7	132.2	150.1	161.6	167.9	168.4
2007-11LdRC	2/28/2011	106.7	104.6	102.3	101.4	103.8	114.2	140.4	152.2	172.3	174.8	178.1	177.2
2007-11LdRC	3/1/2011	107.2	102.7	99.7	99.3	99.9	113.8	141.5	154.5	163.2	174.7	174.4	176.1
2007-11LdRC	3/2/2011	108.1	101.6	98.5	98.7	102.6	114.1	138.8	150.7	164.6	175.8	175.1	174.2
2007-11LdRC	3/3/2011	108.7	101.9	100.7	99.2	102.1	116.4	137.6	153.3	166.3	173.6	177.4	178.6
2007-11LdRC	3/4/2011	112.5	104.5	99.7	99.4	101.5	115.1	138.9	152.8	165.4	175.8	177.3	178.3
2007-11LdRC	3/5/2011	112.4	105.8	102.5	101.2	103.9	112.3	124.4	141	161.3	173.7	175.7	174.6
2007-11LdRC	3/6/2011	113.8	107.6	103.7	101.2	102.6	109.2	117.8	131.8	153	165.1	167.2	167.1
2007-11LdRC	3/7/2011	110	104.6	101.3	99	104.2	117.2	141.4	157.1	172.7	183.5	184.9	185
2007-11LdRC	3/8/2011	116.1	109.7	105.9	104.2	108	120.5	145.7	163.7	180.9	191.7	195.6	195.3
2007-11LdRC	3/9/2011	122.4	116.5	111.2	109.7	111.9	124.2	150.7	167.1	179.8	186.4	187.1	186.8
2007-11LdRC	3/10/2011	111.2	104.9	101	100.2	104.6	116.9	141.8	158.3	168.4	176.5	174.3	172.3
2007-11LdRC	3/11/2011	105.4	99.5	96.9	96.1	100.3	113.3	138.9	153.5	164.9	170.9	172.8	172.4
2007-11LdRC	3/12/2011	108.4	102.7	101.2	98.6	101.5	108.1	119.2	136.7	155.6	168.5	171	171.2
2007-11LdRC	3/13/2011	103.9	99.2	93.9	94	97.1	103.9	112.3	135.8	148.6	156.8	157.4	156.9
2007-11LdRC	3/14/2011	103.4	95.6	94.5	93.7	98.1	111.8	136.1	148.8	160.6	165.2	171.2	163.5
2007-11LdRC	3/15/2011	101.8	97	94.5	94.2	99.2	112.9	137.4	151.8	162.3	169	169.7	166.8
2007-11LdRC	3/16/2011	99.1	95.6	92.5	91.9	97.1	109.8	132.7	147.8	155.7	163.8	162.6	160.9
2007-11LdRC	3/17/2011	102.4	98.8	94.6	95	98.8	112.9	135.3	149.4	158.9	168	170.5	170.6
2007-11LdRC	3/18/2011	105	100	96.6	95.4	100.1	111.7	134.8	148.2	162.1	172.3	173.2	171.6
2007-11LdRC	3/19/2011	108.9	103.8	99.8	99	100.4	107.9	119.2	137	156.4	168.1	167.3	166.8
2007-11LdRC	3/20/2011	109.6	102.5	99.2	98.9	101.9	107.7	119	135	153.3	163.6	165.6	164

SetID	Date	HR1	HR2	HR3	HR4	HR5	HR6	HR7	HR8	HR9	HR10	HR11	HR12
2007-11LdRC	3/21/2011	107.8	103.6	97.5	99.1	102.6	114.2	132.6	150	169.6	179.3	181.5	180.5
2007-11LdRC	3/22/2011	112.5	106.3	102.3	100.4	103.8	116.2	133.7	151.3	171.4	183.3	186.2	184.5
2007-11LdRC	3/23/2011	115.3	109.3	105	104	108.1	117.7	134.7	151.9	172.8	184.3	188.2	189.6
2007-11LdRC	3/24/2011	121	114.8	110.8	108.5	110.6	120.6	136.6	154.2	175.4	191.7	196.3	195.5
2007-11LdRC	3/25/2011	119.9	111.7	108.7	106.7	104	118.4	134.1	151.6	173.2	187.2	192.8	192.2
2007-11LdRC	3/26/2011	117.6	111.5	108.2	107	109	113.9	120.4	139.7	157.4	171.6	172.3	171.1
2007-11LdRC	3/27/2011	108.9	102.8	100.3	98.7	100.9	108	116.6	133.7	152.9	162.2	164.1	162.1
2007-11LdRC	3/28/2011	108.8	101.8	97	98.5	103.7	114.8	135.8	152.8	168.7	177.7	179.6	180.5
2007-11LdRC	3/29/2011	112.4	105.3	100.4	102.9	107	118.4	142.8	158.2	173.7	184.2	185.4	183.3
2007-11LdRC	3/30/2011	113.9	106.9	103.5	101.7	107.4	118.5	140.7	159.6	175.5	183.3	184.1	187.2
2007-11LdRC	3/31/2011	111.2	106.8	103.4	101.4	107.2	118.9	145.8	157	173.7	181	184.9	182.8
2007-11LdRC	4/1/2011	111.1	107	103.6	103.1	105.9	117.3	134.7	149.6	172.7	179.6	181.1	179.6
2007-11LdRC	4/2/2011	108.2	105.4	103.6	102.5	107.3	114.5	118	143.2	159.9	171.8	170.7	169.3
2007-11LdRC	4/3/2011	109	105.4	103	102.1	104.9	110	117.2	137.4	155.1	162.7	163.5	163.5
2007-11LdRC	4/4/2011	107.8	102.5	102.5	101.7	107.3	123.6	134.9	155.3	166.1	175.9	176.7	176.1
2007-11LdRC	4/5/2011	108.6	104.9	102.9	102.5	105.6	121.7	130.4	151.7	161.8	173.1	178.2	178.9
2007-11LdRC	4/6/2011	107.2	104.8	102.8	103.1	108.6	123.2	140	157.5	174.5	179.6	178.4	177.9
2007-11LdRC	4/7/2011	109.9	108.1	105.1	104.4	109.5	124.9	133.6	151.8	166.9	172.4	177.9	178.9
2007-11LdRC	4/8/2011	110.3	108.5	105	104.9	110.3	122.3	139.7	162.7	179.7	184.4	188.1	186.3
2007-11LdRC	4/9/2011	116.1	111.9	108.6	107.5	107.6	113.6	131.1	147.6	163.2	171.9	171.7	172.4
2007-11LdRC	4/10/2011	114	107.8	105.6	104.8	106.8	109.9	119.6	141.9	156.4	161.6	166.9	167.1
2007-11LdRC	4/11/2011	111.5	107.3	107.1	104.9	109	119.9	144.7	159.4	178.4	186.2	188.4	189.3
2007-11LdRC	4/12/2011	113.6	109.6	106	106.4	109.1	121.9	136	165	179.3	187.3	186.3	186.8
2007-11LdRC	4/13/2011	113.2	109	106.5	105.9	108.6	119.6	139	156.7	170.8	181.2	185.2	187
2007-11LdRC	4/14/2011	112.8	109	106.1	104.3	106.9	117.7	138.4	153.3	170.8	183.5	188.8	189
2007-11LdRC	4/15/2011	115.4	111.2	107.9	106.6	108.9	118.3	139.8	157.6	172.1	182.8	186.2	186.2
2007-11LdRC	4/16/2011	117.6	111.4	107.5	105.7	106.9	111.9	123.2	141.9	159.5	172.6	177.9	177.6
2007-11LdRC	4/17/2011	116.6	110.8	107.6	106	107.1	112.5	120.2	136.1	153.9	165	169.3	170.8
2007-11LdRC	4/18/2011	112.8	110.2	106.6	106.2	110.5	128.1	137.3	156.3	170.4	180.5	185.2	187.1
2007-11LdRC	4/19/2011	108.3	107.5	105.3	104.2	111.3	125.2	134.3	150.5	163.1	177.2	183.1	184.1
2007-11LdRC	4/20/2011	109.5	106.9	105	104.4	109.2	116.3	136	152.5	168	175.8	180.8	182.4
2007-11LdRC	4/21/2011	111.5	107.2	105.6	104	106.4	116.1	136.1	150.7	165.8	175.5	179.9	181.5
2007-11LdRC	4/22/2011	113.2	108.9	106.5	104.3	107.2	115.7	135	151.4	166.6	180.4	178.8	180
2007-11LdRC	4/23/2011	114.1	107.5	105	104.2	105.6	110.6	120.2	141.8	152	163.9	168	167.9
2007-11LdRC	4/24/2011	112.4	107.5	104.3	103.1	104.5	109.5	117.1	128.7	143.2	154.4	161	162.4
2007-11LdRC	4/25/2011	110.9	106.3	103.8	104.2	107.6	116.9	129.3	150.6	164.5	175.3	178.5	180.4
2007-11LdRC	4/26/2011	110.5	105.2	102.9	103.3	106.7	117.2	134.9	151.4	165.6	176.8	180.9	180
2007-11LdRC	4/27/2011	109.9	106.3	104.8	104.9	107.3	117.4	135.8	152.6	165.4	176.8	181.6	184.5
2007-11LdRC	4/28/2011	115.6	109.7	107	104.8	108.1	117.5	143.9	154	169.3	176.8	176.7	175.4
2007-11LdRC	4/29/2011	113	107.8	105.4	104	107.4	117.3	137.5	154.1	171	179.3	180	183.1
2007-11LdRC	4/30/2011	115.4	109.8	105.6	104.9	107	112.6	121.5	138.4	156.4	168.4	170.7	170.9
2007-11LdRC	5/1/2011	112.2	107.6	105.1	103.9	104.5	108.6	114.8	128.3	144.5	155.1	159.2	160.3
2007-11LdRC	5/2/2011	110.7	106.5	104.3	103.6	105.5	114.3	131.4	148.8	165	177.6	182.3	183.2
2007-11LdRC	5/3/2011	113	108.1	105.6	105.2	107.7	116.9	134.5	149.7	166	176.9	183.4	186.6
2007-11LdRC	5/4/2011	114.3	109.7	107.2	106.9	109.6	118.9	135.6	150.7	169.1	181.2	186.6	190
2007-11LdRC	5/5/2011	114.7	110.5	108.3	107.9	110.2	119.1	135.6	151.8	170.4	182.9	186.5	187.9
2007-11LdRC	5/6/2011	117.1	111.6	109.2	108.6	110.6	119.8	135.9	154.6	172.4	181.9	188.6	191
2007-11LdRC	5/7/2011	117.5	112.6	109.5	108.9	109.7	114.8	123.2	140	158.5	169.7	174.5	173.3
2007-11LdRC	5/8/2011	115.8	110.1	107.5	106.3	108.8	112.4	117.9	132.6	148.7	159.6	163.9	164.5
2007-11LdRC	5/9/2011	114.6	111.1	108.2	108.1	109.6	119.2	135.9	152.8	170.1	183.2	190.2	192.2
2007-11LdRC	5/10/2011	113.1	108.4	105.4	105.9	108.6	118.4	136.5	151.8	170	180.1	183.7	186.5
2007-11LdRC	5/11/2011	112.2	108.6	106.4	105.4	107.2	116.7	125.2	151.1	167.8	178.3	184.3	189.3
2007-11LdRC	5/12/2011	115.3	111	107.9	107.5	109	118.3	136.2	154.8	172.3	180.3	183.7	187.3
2007-11LdRC	5/13/2011	114.6	111.4	109	108.8	111.4	120.1	137	151.8	168.6	179.9	183.7	186.9
2007-11LdRC	5/14/2011	120.5	111.2	103.7	108.3	112	117.6	123.7	138.8	154.8	166.1	171.1	172
2007-11LdRC	5/15/2011	113.2	111.3	108.7	108.1	109.9	115.7	119.6	133.2	147.2	158	164.6	167.7
2007-11LdRC	5/16/2011	113.4	111.1	108.3	108.5	114.3	125.3	137.9	153.7	170.4	182.7	189	191.2
2007-11LdRC	5/17/2011	115.1	110.3	108.4	107.9	110.6	119.3	137.2	153.8	171.1	181.6	185.8	189.6
2007-11LdRC	*5/18/2011*	*116.7*	*111.5*	*109.5*	*108.6*	*111.2*	*120.3*	*139.4*	*155.4*	*170*	*181.9*	*188.7*	*191*
2007-11LdRC	5/19/2011	117.2	113.6	110.9	110.4	111.9	120.1	138.5	156	171.9	179.6	183.6	183.4
2007-11LdRC	5/20/2011	112.8	109.5	107.6	106.1	108.3	118.5	138.1	155	170.2	179.6	185.8	183.6
2007-11LdRC	5/21/2011	116.2	111.9	109.5	108.3	109	115	122	141.8	154	162.2	170.4	175.1
2007-11LdRC	5/22/2011	117.1	112.2	109.1	107.6	109.2	112.8	119.8	132.6	145	156.9	163.9	169.2
2007-11LdRC	5/23/2011	115.3	110.7	108.7	108.9	110.9	118.9	138.8	158.5	178.7	190.6	195.9	197
2007-11LdRC	5/24/2011	116.7	112.2	110	110.7	111.3	121.4	138.8	159.2	177.7	188.5	192.6	193.3
2007-11LdRC	5/25/2011	115.4	111.6	108.2	108.6	110.2	120	138	155.8	174.7	186.4	190.9	193.5
2007-11LdRC	5/26/2011	115.4	110.7	109.1	108.1	109.9	119.4	137.9	157.3	175.4	186.8	191.9	192.3
2007-11LdRC	5/27/2011	117.1	112.3	110.3	110.2	110.2	118.9	136.7	152.9	172.3	180.7	189.2	190.3
2007-11LdRC	5/28/2011	119.8	112.6	109.9	108.1	109.4	115.7	124.3	138.6	152.9	162.3	170.1	174.8
2007-11LdRC	5/29/2011	118.6	114	110.4	108.1	109.1	111.6	118.3	130	143.9	155.6	164	167.2
2007-11LdRC	5/30/2011	116.1	111	108.4	107.4	108.9	112.4	120.6	133.2	146.9	158.5	166	170.2
2007-11LdRC	5/31/2011	116.4	113.6	110.4	108.3	110.7	118.6	137.5	151.7	176.5	189.7	195.5	199.3
2007-11LdRC	6/1/2011	124.5	118	114.5	113.5	114.8	126	144.8	164.4	180.3	191.7	194.4	197.3
2007-11LdRC	6/2/2011	123.8	117.8	114.3	112.1	114.9	125.6	143.4	162.9	179.8	190.5	193.7	198.1
2007-11LdRC	6/3/2011	123.8	117.5	114.5	113.4	116.3	128.2	146.5	165.5	184.6	192.5	197.2	198.8
2007-11LdRC	6/4/2011	128.9	120.5	115.9	114.6	115.1	119.7	129.7	149	170.1	181.5	187.6	187.3
2007-11LdRC	6/5/2011	125	119.1	114.4	112.5	113	118.8	126.8	142.5	159.1	171.9	177.2	179.2
2007-11LdRC	6/6/2011	122.4	116.3	113.4	111.5	114.2	125.2	143.1	162.6	178.9	192.4	194.7	195.6
2007-11LdRC	6/7/2011	122.5	115.8	112.2	112.3	115	124.7	142.1	164.5	181.8	192.1	193.7	194.8

SetID	Date	HR1	HR2	HR3	HR4	HR5	HR6	HR7	HR8	HR9	HR10	HR11	HR12
2007-11LdRC	6/8/2011	121.8	115.1	113.2	110.6	113.2	121.2	137.3	158.7	176.1	190.3	194.4	196.3
2007-11LdRC	6/9/2011	122.8	117.5	112.9	111.8	111.1	122.1	139.5	160.4	178.3	191.5	194.7	196.2
2007-11LdRC	6/10/2011	123.7	117.2	113	112.1	113.6	122	133.9	154.6	172.1	183.3	187.4	190.9
2007-11LdRC	6/11/2011	125.1	117.5	113.8	112	113.2	119.9	127.3	144.9	163.4	177.5	180.7	180.8
2007-11LdRC	6/12/2011	121.6	115.2	111.2	110.2	111.7	117.4	125.1	142.4	157.1	167.1	173	174.4
2007-11LdRC	6/13/2011	121.7	116.3	112.1	109.3	112.3	122.9	138.4	160.1	179.2	192.9	197.8	201.3
2007-11LdRC	6/14/2011	125.1	118.4	114	112.3	115.1	127.2	139.7	161.5	178.4	189.7	192.6	197.8
2007-11LdRC	6/15/2011	124.1	117.8	114.8	113.4	115.8	125.1	140.6	160.5	177.4	189.6	193.4	195.2
2007-11LdRC	6/16/2011	125.6	118.7	113.8	111.8	114.1	124	138.3	158.4	174.9	188.6	193.9	196.2
2007-11LdRC	6/17/2011	126	119.3	115.7	114	116	126.5	141.8	162.3	180.9	191.7	194.5	197.7
2007-11LdRC	6/18/2011	125.7	118.7	115	112.9	114	122.1	129	146.8	164.6	176.1	181.5	183.5
2007-11LdRC	6/19/2011	125.1	118.2	113.6	112.4	112.4	119.1	129.7	144.7	162.3	171.3	177.7	180
2007-11LdRC	6/20/2011	122.9	115.1	113.2	111.2	115.6	125.6	134.8	149.7	176.6	192.6	197.9	199.2
2007-11LdRC	6/21/2011	122.4	116.1	112.7	111.1	113	123	146.2	169.7	180.8	188.6	191.9	192.2
2007-11LdRC	6/22/2011	120.6	115.2	111.8	109.3	113.2	122.5	139	161.9	180.5	190.9	195.5	195.4
2007-11LdRC	6/23/2011	122.9	116.7	113	111.4	114.4	125	141.9	160.9	177.3	191.5	195.7	196.4
2007-11LdRC	6/24/2011	122.4	117.6	112.6	112.2	114.5	124.5	140	160.6	174.6	190.3	193.9	195.7
2007-11LdRC	6/25/2011	125.9	119.3	114.4	112.5	113.1	119.9	130.4	148.6	166.7	178.7	183.7	184.4
2007-11LdRC	6/26/2011	125.3	118	113.1	111.4	112.7	118.6	127.7	141.8	159.1	171.3	176.3	177
2007-11LdRC	6/27/2011	122	117.2	113.1	112	115.5	123.5	141.9	160.5	179.1	190.1	195	198
2007-11LdRC	6/28/2011	122.8	116.6	112.5	110.5	113.8	123.9	140	161.5	180.5	191.1	194.7	196.2
2007-11LdRC	6/29/2011	124.8	116.9	113.3	112.4	115.2	125.9	143	162	182	193.2	198.4	200.6
2007-11LdRC	6/30/2011	125.9	118.5	115.7	113.4	115.9	126.6	144.4	163.7	183.9	196.7	199	200.6
2007-11LdRC	7/1/2011	122.7	118.9	116.6	116	117.6	121.5	135.5	154.1	175.7	190.5	196.3	198.4
2007-11LdRC	7/2/2011	124.5	119.5	117.3	115.9	116.1	120.1	125.4	138.5	158.1	170.5	175.3	177.8
2007-11LdRC	7/3/2011	122.9	119.5	116.7	114.8	115.7	118.5	123.8	135.2	152.4	165.6	171.8	172.4
2007-11LdRC	7/4/2011	123.1	118.4	116.1	114.8	115.3	117.8	121.8	136.5	160.1	173.3	183	180.8
2007-11LdRC	7/5/2011	123.4	119.7	118.6	117.6	118.2	123.6	134.7	156.6	178.5	197.6	202.5	205.8
2007-11LdRC	7/6/2011	125.2	120.5	118.1	116.8	118	124.6	137.2	157.3	180.4	197	199.2	202.8
2007-11LdRC	7/7/2011	125.4	120.3	118.3	117.7	119.6	125.6	136.5	156.9	177.1	192.2	199.1	201.5
2007-11LdRC	7/8/2011	124.3	120.2	118.4	117.3	118.8	124	135.3	153.1	174.7	191.6	198.9	199.1
2007-11LdRC	7/9/2011	126.2	121.3	118.8	118.3	118.9	121.9	126.4	143.5	163.8	179.4	186.4	187.8
2007-11LdRC	7/10/2011	124.5	119.9	117.6	116.5	116.9	119.3	123.4	137.3	155.2	168.1	176	178.4
2007-11LdRC	7/11/2011	122.9	118.5	116.6	116	117.5	123.2	134.3	154.8	175.6	191.3	199.4	202.7
2007-11LdRC	7/12/2011	124.2	120.1	117.8	117.5	118.5	124.3	134.8	155.5	176.8	192.9	201.4	202
2007-11LdRC	7/13/2011	124.5	120.3	118.5	117.7	118.5	124.5	134.9	154.1	175.6	191.3	197.9	200.7
2007-11LdRC	7/14/2011	123.8	120	117.7	117.1	118.6	124.5	127.5	154.3	175.8	191.6	198.9	203
2007-11LdRC	7/15/2011	125.4	121.1	118.8	118.2	119.5	126.1	135.9	154.3	173.9	189	195.7	199.1
2007-11LdRC	7/16/2011	124.7	120.5	118.2	116.7	117.8	120.9	126.2	142.5	164.6	179.9	187.8	189.5
2007-11LdRC	7/17/2011	124.5	119.9	117.9	116.7	117.4	120.3	123.8	137	156.7	172.1	177.7	179.1
2007-11LdRC	7/18/2011	123.9	119.2	117.8	117	118.5	119.1	135.1	155.2	179.1	197.1	202.5	204.5
2007-11LdRC	7/19/2011	126.1	121	118.5	117.6	119.3	125.3	135.3	155.1	177.7	195.9	204	205.8
2007-11LdRC	7/20/2011	124.5	120.1	117.6	117	118.8	124.8	134.9	153.6	173.9	187	191.5	197.5
2007-11LdRC	7/21/2011	123.6	119.3	117.4	116.2	117.9	123.7	135.1	151.9	171.2	186.4	191.3	192.7
2007-11LdRC	7/22/2011	123.4	118.8	116.9	115.5	117.7	123	135.7	153.8	173.8	192.1	199.4	203
2007-11LdRC	7/23/2011	125.4	119.9	117.7	116	117.2	119.9	127.5	140.8	162.3	178.1	185.8	186.1
2007-11LdRC	7/24/2011	126.4	121.1	118.4	116.7	117.2	120.5	125.4	138.3	156.9	171.3	179.1	180.4
2007-11LdRC	7/25/2011	127.3	120.9	118.8	117.7	119.1	124.7	137.6	160.2	183.2	199.9	211.3	214.6
2007-11LdRC	7/26/2011	128.3	123	120.2	119.7	121	128.3	141.2	159.7	183.2	200.4	206.7	208.5
2007-11LdRC	7/27/2011	125.6	120.9	118.9	117.7	119.1	124.3	136.7	156.6	178.5	194.8	202	204.8
2007-11LdRC	7/28/2011	125.4	120.8	118.8	117.5	119.1	125.3	136.9	152.8	177.9	196.3	202.8	204.5
2007-11LdRC	7/29/2011	125.8	122.1	119.7	118.8	120.5	126.8	138.4	159	178.1	196	200.7	202.5
2007-11LdRC	7/30/2011	125.8	120.9	118.2	116.8	117.5	121.3	126.6	143.1	161.7	178.9	186.9	189
2007-11LdRC	7/31/2011	124.5	121.1	118	117.2	117.4	120.3	123.8	137.4	156.7	170.9	179.5	180.5
2007-11LdRC	8/1/2011	127.3	121.7	119.6	117.6	120.5	127.4	140.8	161	183.6	199.7	204.9	204.4
2007-11LdRC	8/2/2011	128.2	123.2	120	119.5	121.2	128.2	141.6	162.1	185.1	199.8	205.3	207.9
2007-11LdRC	8/3/2011	128.4	122.9	119.3	118.7	121.1	129.6	143.3	161.3	180.6	196.3	203.6	206.4
2007-11LdRC	8/4/2011	126.5	121.1	118.3	117.5	118.8	127.7	140.6	158.9	179.6	194.2	201.3	201.9
2007-11LdRC	8/5/2011	125.4	120.3	117.3	116.1	118.4	127.2	139.6	159.9	179.5	194	198.3	199.2
2007-11LdRC	8/6/2011	129.8	123.1	119.8	117.3	118.4	123.3	129.7	145.1	165.5	182	188.3	191.1
2007-11LdRC	8/7/2011	129.1	123.6	120.1	118.7	119.5	123.6	128.8	143.4	163.4	177.5	184.5	186.1
2007-11LdRC	8/8/2011	130	123.7	120.7	119.4	121.3	129.7	144	167.9	188.5	205.1	211.8	216.1
2007-11LdRC	8/9/2011	129.6	123.7	120.4	120	122.1	130.1	145	167	190.1	206.6	214.3	216.7
2007-11LdRC	8/10/2011	130.5	124.2	120	119	120.6	128.3	141.9	163	184.7	201.2	208.4	213
2007-11LdRC	8/11/2011	131.9	126.1	122.8	121	122.3	131.5	144.7	167	189.3	203.7	207.9	206.4
2007-11LdRC	8/12/2011	128.9	122.8	119.6	118.2	118.6	124.7	136.7	162.1	180.6	195.9	203.9	207.4
2007-11LdRC	8/13/2011	129.4	122.9	119.3	117	117.2	123.3	128.5	143.3	165.3	182.8	188.4	189.6
2007-11LdRC	8/14/2011	127.6	121.4	118.9	116.3	117	120.6	125.7	150	159.1	174	178.2	176.1
2007-11LdRC	8/15/2011	126.3	121	117.1	117.6	120.8	127.3	142.1	162.4	182	201.8	207.9	211.1
2007-11LdRC	8/16/2011	129.9	122.7	121.8	118.7	121.5	129	140.9	162.5	183.8	200.9	207.1	209.9
2007-11LdRC	8/17/2011	126.6	120.4	118.4	115.9	118.6	126.5	140.2	159.6	179.5	195.8	202.3	205.7
2007-11LdRC	8/18/2011	127.6	122.7	118.6	117.6	120	120.3	141.5	160.9	184.9	199.9	206.1	209.5
2007-11LdRC	8/19/2011	128.5	122	118.7	117.5	120	126.9	138.8	155.9	176.4	188.5	197.4	200.2
2007-11LdRC	8/20/2011	133	125.5	121.7	119.4	119.8	124.8	131	147.9	170.6	186.6	191.5	191.3
2007-11LdRC	8/21/2011	126.7	120.6	116.7	114.6	115.1	118.4	123.3	135.8	156.4	169.8	175.7	176.9
2007-11LdRC	8/22/2011	124.4	118.6	115.5	114.2	116.4	123.5	136.2	156.1	178.1	195.7	204.1	206
2007-11LdRC	8/23/2011	125.7	120	117.2	116.4	118.5	126.3	139.2	159.4	177.1	191.7	198	199.8
2007-11LdRC	8/24/2011	123.8	119.5	117	115.9	118.5	127.4	138.5	159.8	180.4	192.7	198	199.7
2007-11LdRC	8/25/2011	126	121.4	118.8	117.6	120.3	129.5	146.3	162.1	179.7	194.4	201.5	206.4

SetID	Date	HR1	HR2	HR3	HR4	HR5	HR6	HR7	HR8	HR9	HR10	HR11	HR12
2007-11LdRC	8/26/2011	126.8	121.7	119.4	117.4	119.3	129.4	147.9	164.6	184.7	199.5	203.2	204.9
2007-11LdRC	8/27/2011	130.1	124.1	120.3	118.7	119.1	122.6	130.2	146.6	169.3	184.1	191.5	193.3
2007-11LdRC	8/28/2011	126.7	121.2	117.1	114.7	115.7	120.1	125.2	138.6	158.6	170.9	179.7	181.1
2007-11LdRC	8/29/2011	124.2	119.2	116.4	115.6	118.2	127.3	146	160.9	183.4	196.2	203.6	207.3
2007-11LdRC	8/30/2011	128.8	122	118.5	117.5	120	127.6	146.8	164.4	185.3	197.2	205.3	209.9
2007-11LdRC	8/31/2011	128.6	122.5	118.6	117.9	119.7	129.3	147.6	164.1	183.3	198.3	203.3	206.9
2007-11LdRC	9/1/2011	126.4	121.6	118.4	117.7	118.5	128.7	147	163.1	181.7	195.1	201.8	204.6
2007-11LdRC	9/2/2011	125.5	118.8	116.9	115.5	116.4	126.3	144.9	161.1	180.9	193	198.7	202.7
2007-11LdRC	9/3/2011	128.1	121.2	118.3	117.2	118.1	124.1	130.3	146.1	164.9	180	189.3	192.9
2007-11LdRC	9/4/2011	127.1	122.1	118.1	116.6	118.1	121.5	126.5	141.4	159.8	172.8	176.4	180.2
2007-11LdRC	9/5/2011	127.9	122.2	119	117.8	118.7	123.8	130.4	145.1	165.6	181.9	188.9	191.5
2007-11LdRC	9/6/2011	126	121.2	119.1	117.6	119.8	128.7	145.1	163.1	182.6	195.7	201.1	201.4
2007-11LdRC	9/7/2011	123.3	118.7	116.4	115.9	117.3	126.6	143.3	161.1	178.3	191.4	196.7	199.2
2007-11LdRC	9/8/2011	123.8	119.3	116.6	115.4	118.1	127.1	144.6	159.8	178.5	191.5	195.3	201.1
2007-11LdRC	9/9/2011	124.1	120.2	117.1	115.9	118.1	128.5	145.3	161.6	176.6	190.8	196.4	199.8
2007-11LdRC	9/10/2011	128.4	122.3	119.4	118.2	119.6	124.3	130.6	147.8	167.5	182.2	193.5	193.9
2007-11LdRC	9/11/2011	127.5	121.8	118.1	116.2	120.6	121.7	126.7	139.8	158.7	172.2	178	180.9
2007-11LdRC	9/12/2011	124	119.1	117.2	116.7	119.1	127.6	145.3	163.8	182.7	194.9	199.8	205.9
2007-11LdRC	9/13/2011	124.1	119	116.4	115.4	118.4	127.7	146.8	161.8	179.4	192.8	199.2	203.1
2007-11LdRC	9/14/2011	128.5	120.2	118.1	117.2	120.1	128.9	150.1	162.2	180.1	190.1	198.1	200.7
2007-11LdRC	9/15/2011	124.9	118.9	117.9	116	120.2	127.9	146	162.8	182.1	194.2	198.2	198.8
2007-11LdRC	9/16/2011	124.1	119.3	117.6	116.7	118	128.4	146.4	164.5	183.8	195.6	200.1	199.2
2007-11LdRC	9/17/2011	125.5	120.1	117.5	115.3	116.9	122.2	130.6	145.8	164.3	176.7	179.3	181.9
2007-11LdRC	9/18/2011	121.7	116.8	114.5	113.1	114.4	118.7	124.1	136.6	153	165	172.8	175.2
2007-11LdRC	9/19/2011	117.3	114	112.6	111.2	111.5	121.3	138.2	154	172.9	186.7	191.5	193.3
2007-11LdRC	9/20/2011	120.8	116.3	114.2	113.1	115.6	124.1	140.7	156	174.2	187.1	194.9	196.4
2007-11LdRC	9/21/2011	121.1	116.2	114.4	113.5	116.2	125.4	132.8	158.1	175.6	189.9	192.6	194.7
2007-11LdRC	9/22/2011	122.4	118.3	115.5	113.7	115.8	126	145	157.3	175.7	187.3	193.7	196.3
2007-11LdRC	9/23/2011	124.9	119.7	117.7	116.8	119	129.2	146	163.2	181.4	198	202.6	203.6
2007-11LdRC	9/24/2011	125.6	119.1	117.3	115.8	116.8	121.9	128.8	146.4	169.1	182.6	188.5	189.3
2007-11LdRC	9/25/2011	127.4	121.6	118.6	116	116.1	121.7	127.2	142.9	161	176.7	183.6	187.7
2007-11LdRC	9/26/2011	125.5	121.3	117.8	116.4	118.7	126.7	145.4	164.8	180.6	190.1	199.2	196.8
2007-11LdRC	9/27/2011	121.4	116.3	114.7	113.5	116.6	125	140.2	155.1	174.2	185.5	191.1	191.6
2007-11LdRC	9/28/2011	120.3	115.6	113.5	113	116	124.4	140.9	155.8	168.6	179.2	186.1	192.9
2007-11LdRC	9/29/2011	119.3	116.2	113.5	116.1	114.6	124.7	140.5	156.4	173.8	185.9	190.1	193.2
2007-11LdRC	9/30/2011	120.9	117.2	114.2	113.8	114.4	124.1	139.3	157.5	175	186.5	190.5	189.6
2007-11LdRC	10/1/2011	123.7	119.1	116.8	115.5	117.1	122.1	128	145.3	168	185.4	191.3	192.5
2007-11LdRC	10/2/2011	124.7	119.4	116.1	114.6	115.1	121	125.6	139.3	158.8	172	182.4	182.4
2007-11LdRC	10/3/2011	123.1	118.6	116.7	115.7	117.7	125.6	142.6	158.9	177.2	192.3	198.2	202.3
2007-11LdRC	10/4/2011	121.1	117.4	115.3	115.3	117.7	125.4	138.3	156.2	176.7	186.3	191.9	194.3
2007-11LdRC	10/5/2011	121.9	116.9	115	114.6	117.4	125.6	141.9	158.8	176.6	188.5	191.6	196.8
2007-11LdRC	10/6/2011	122.5	117.7	115.7	115.2	117.9	125.3	143.4	159.5	179.9	191	195.8	199
2007-11LdRC	10/7/2011	128.2	122.5	118.2	116.3	119	125.4	144.2	169.1	187.3	198.1	202.1	198.1
2007-11LdRC	10/8/2011	122.5	118.3	115.4	114.6	115.5	121	126.5	153.3	166.8	179.9	181.6	182.2
2007-11LdRC	10/9/2011	121.4	117.4	114.1	113	115.4	117.9	123.8	146.5	158.9	177.8	175	175.8
2007-11LdRC	10/10/2011	120.7	117.4	115.6	114.4	116.9	122.9	144.2	166.7	181.7	192.2	196.7	201
2007-11LdRC	10/11/2011	123	117	115.5	116.5	117.6	123.5	147.2	173.1	186.9	195.9	197.1	197.8
2007-11LdRC	10/12/2011	121.2	117.3	116.5	114.5	116.1	125.5	145	160.5	176.9	188.6	195.2	198.1
2007-11LdRC	10/13/2011	118.8	116.8	114.5	114	116.7	123.3	134.3	157.5	176.1	189.1	195.5	197.6
2007-11LdRC	10/14/2011	121.2	116.7	114.6	114.5	115.6	124.1	141.9	157.6	175.2	190.8	195.2	195.3
2007-11LdRC	10/15/2011	121.5	116.3	113.2	111.8	113	116.8	123.4	138.1	156.5	171.2	175.2	177.7
2007-11LdRC	10/16/2011	121.2	116.7	114.1	113.2	114.6	118.1	124.5	138.3	156.5	165.8	175.9	182.4
2007-11LdRC	10/17/2011	123.4	118.6	116.4	115.2	118.2	128	148	165.9	185.6	200.2	203.5	207.8
2007-11LdRC	10/18/2011	121.8	117.1	114.9	114.4	116.1	125.4	142.7	159.4	178.2	191.7	197.8	198.7
2007-11LdRC	10/19/2011	121.2	117.2	115.3	115.1	117.9	127.9	146.9	163.1	182.6	193.4	200.7	205.7
2007-11LdRC	10/20/2011	121.7	118.1	115.6	114.6	116	125.3	145.1	160.7	182.7	197.8	202.6	207.2
2007-11LdRC	10/21/2011	125.4	120.7	116.1	115	117.7	127.3	146.6	162.7	181.7	196.1	198.5	202.9
2007-11LdRC	10/22/2011	125	119.3	117.1	115.7	117.1	122.4	131.7	147.3	165.2	179.4	184.4	187.3
2007-11LdRC	10/23/2011	121.3	117.5	114.8	113.7	114.6	119.1	127.4	139.9	155.3	167	171.4	171.8
2007-11LdRC	10/24/2011	117.3	112.7	111.3	111.2	113.9	123	143.7	160.6	177.4	189.2	193.1	196.4
2007-11LdRC	10/25/2011	119.1	115.5	113.5	113.3	115.5	124.3	143.7	159.1	178.1	188.5	193.1	192
2007-11LdRC	10/26/2011	118.9	115.7	113.9	112.5	115.3	125.1	144	160.1	176.5	189.5	195.6	196.4
2007-11LdRC	10/27/2011	119	115.1	112.9	112.4	114.6	123.4	139	155.8	174.4	186	188.9	192
2007-11LdRC	10/28/2011	120.9	116.5	114.6	114.4	116.3	124.4	143.5	160.7	177	188	191.4	193.4
2007-11LdRC	10/29/2011	127.6	121.4	117.6	115.5	116.1	119.1	126.4	142.6	159.1	172.7	176.3	174.7
2007-11LdRC	10/30/2011	124.2	118.8	114.5	113	112.9	116.5	120.7	136.3	149.1	161.6	171.4	173.2
2007-11LdRC	10/31/2011	125.2	118.2	116.1	114.5	116.6	124	137.7	160.7	172.6	191.7	198.5	201.6
2007-11LdRC	11/1/2011	129.3	122.9	118.2	116.5	119.3	127.3	145.5	162.8	178.8	189.2	194.4	197
2007-11LdRC	11/2/2011	125.7	118.6	114.1	112.7	115.6	126.4	145.5	158.8	175.1	185.5	191	193.2
2007-11LdRC	11/3/2011	118.8	112.4	109.9	109.2	112.6	123.1	143.7	157.7	173.7	184.5	188.5	189.7
2007-11LdRC	11/4/2011	118.5	112.5	108.8	108.7	111.9	123.7	145.5	158.5	175.6	186.8	189.1	189.2
2007-11LdRC	11/5/2011	121.9	114.8	110.8	108.5	111	118.3	127.5	142	161.9	174.9	178.6	179
2007-11LdRC	11/6/2011	120.3	112.9	108.9	107.5	108.7	114.8	122.8	139.3	157.2	167.9	172.3	175.6
2007-11LdRC	11/7/2011	115.2	110.6	107.5	106.5	110.7	122.4	141.3	159.6	173.7	184.1	188.5	189.8
2007-11LdRC	11/8/2011	118.3	112.6	110.4	109.4	112.8	125.6	145.2	161.4	176.2	188.1	191.6	194.1
2007-11LdRC	11/9/2011	118.6	113.9	110.3	110.9	112.5	124.8	145.8	162.7	177.3	187	189.7	191.1
2007-11LdRC	11/10/2011	116.7	113.8	110.8	110.6	112	124.4	137.1	156.3	169.2	179.9	186.4	187
2007-11LdRC	11/11/2011	116.4	111	106.7	106.3	108.6	117.9	129.4	147.2	166	177.3	182.5	182.9
2007-11LdRC	11/12/2011	117.4	111.2	107.8	106.3	108	113.9	122.7	139.1	159.7	170.6	173.4	175.4

SetID	Date	HR1	HR2	HR3	HR4	HR5	HR6	HR7	HR8	HR9	HR10	HR11	HR12
2007-11LdRC	11/13/2011	117.3	111.1	108	107	107.9	113.7	122.4	135.9	153.5	164	171	172.7
2007-11LdRC	11/14/2011	115.9	109.9	105.6	104.9	107.9	120.1	136.1	153.1	166.7	173.9	179.3	183.8
2007-11LdRC	11/15/2011	118.6	113.7	110.8	109.4	113.2	124.8	149.6	162.3	178.8	189.3	194.4	195.9
2007-11LdRC	11/16/2011	115.8	111.6	108.9	108.1	110.9	122.9	143.2	158.1	173.1	185.4	184.5	189.2
2007-11LdRC	11/17/2011	116.2	111.1	106.5	105.5	110.8	122.4	142.6	156	171.9	179.8	184.7	186.8
2007-11LdRC	11/18/2011	116	110.1	108	105.2	109.1	121.7	141.3	156.4	172.1	179.2	183.2	182.8
2007-11LdRC	11/19/2011	118.2	111.2	107.8	106.5	107.6	114.5	129.1	147.5	168.4	178.8	178.2	179.7
2007-11LdRC	11/20/2011	125.8	118.4	112	108.9	113.4	116.3	122.5	136.1	156.3	163.8	169.4	171.3
2007-11LdRC	11/21/2011	117.3	111	108	107.6	110.6	123.4	144.9	160	181.5	190.5	196.3	198.1
2007-11LdRC	11/22/2011	122.6	117.6	114.7	113.7	116.6	128.3	151.4	169	189.7	197.1	198.7	199.2
2007-11LdRC	11/23/2011	124.5	117.8	113.9	114	118.1	129.1	151.5	168.5	183.6	191.5	197.4	196.3
2007-11LdRC	11/24/2011	123.9	115.6	110.1	109.8	113.3	120.9	132.4	149.6	170	187.6	192.8	194.1
2007-11LdRC	11/25/2011	116.8	110.9	108.9	108.6	112	117	131.5	145.7	166.1	180.7	186.3	188.1
2007-11LdRC	11/26/2011	122.6	116	110.8	108.4	111	115.9	126.6	141.5	162.1	176.2	182.5	183.6
2007-11LdRC	11/27/2011	126.3	118.2	114.1	111	114.7	120.5	126.4	138.5	154.4	162.2	170	171.2
2007-11LdRC	11/28/2011	118.5	110.2	108	104.9	109.9	121	140.9	157.5	170.8	184.5	185.9	188.4
2007-11LdRC	11/29/2011	119	113.4	108.8	107.2	109.9	123.4	142.4	158.6	174.7	185.6	188.8	190.5
2007-11LdRC	11/30/2011	114	110.5	106.9	105.5	108.8	128.3	140.7	150.1	166.7	177.8	183.4	186.4
2007-11LdRC	12/1/2011	113.9	109.7	106.8	106	108.4	117.7	137.9	146.7	160	176.7	183.5	186
2007-11LdRC	12/2/2011	114.4	109.5	107.4	107.2	110	119	138.2	146.4	161.9	175	181.2	184.8
2007-11LdRC	12/3/2011	116.1	111.2	108.1	107.7	109.2	113	121.7	131.7	145	164.2	168.2	173.3
2007-11LdRC	12/4/2011	116.7	111.8	109.6	107	108.3	112.1	118.9	130.9	146.8	161	165.2	166.6
2007-11LdRC	12/5/2011	111.3	107.4	106.7	107.8	111.4	126.6	144.2	159.5	173.9	180.4	183	182.8
2007-11LdRC	12/6/2011	114.5	109	107.6	106.5	109.4	119.4	137.3	149.5	163	172.5	177.7	179.1
2007-11LdRC	12/7/2011	111.7	107.8	104.6	104.7	107.7	115.8	127.5	143.7	155.1	161.4	166	168
2007-11LdRC	12/8/2011	113.2	108.6	105.6	104.9	108	117.9	132.1	143.2	163.4	172	174.9	175.5
2007-11LdRC	12/9/2011	113	109.1	106.6	107.1	110	118.4	139.3	152.3	154.6	164.7	176.8	178.1
2007-11LdRC	12/10/2011	114.7	109.9	108	106.6	108.4	114.2	121.7	134.1	151.8	164.1	166.6	167.3
2007-11LdRC	12/11/2011	113.5	108.9	106.6	104.9	106.2	110.4	117	128.1	145.4	158.2	162.2	161.3
2007-11LdRC	12/12/2011	112	107.7	105.6	105.4	107.8	117.4	136.3	149	163.6	175.5	176.6	173.9
2007-11LdRC	12/13/2011	113	108.7	106.1	105.9	108.9	117.5	134.9	147	159.1	168	169.8	171.9
2007-11LdRC	12/14/2011	111.1	106.9	104.6	104.2	106.7	121.7	134.2	145.9	158.2	165.1	166.6	170
2007-11LdRC	12/15/2011	110.5	105.4	105.2	104.4	106.7	114.4	131.4	143.9	154.2	166.5	167.2	170.7
2007-11LdRC	12/16/2011	112.1	108.1	105.4	104.7	107	115.6	134.4	141.4	155.9	165.8	169.7	170.7
2007-11LdRC	12/17/2011	112.4	108	105.4	104.6	107.4	112	121.7	132.4	149.2	158.6	162.7	161.9
2007-11LdRC	12/18/2011	114.2	108.4	105.9	105.2	107.1	112.3	117.6	129	144.8	156.5	156.6	156.8
2007-11LdRC	12/19/2011	115.4	109.7	107.2	106.2	108.4	118	133.5	147.4	162.7	175.2	179.3	178.4
2007-11LdRC	12/20/2011	114	109	106.2	105.1	106.9	116.8	132	146.5	160.4	172.4	175	179.9
2007-11LdRC	12/21/2011	113.3	108.2	106	105.8	108.3	116.9	134.5	147.8	162.8	178.4	180.7	181.2
2007-11LdRC	12/22/2011	123.8	111.5	108.7	107.4	108.9	116.7	129.3	146.3	166.2	182.6	187.5	186.4
2007-11LdRC	12/23/2011	114.8	111.7	109.3	108.2	114.9	123.8	133.4	149.1	163.5	173.6	177.2	177.5
2007-11LdRC	12/24/2011	115.7	109.7	106.7	106.1	107.2	111.4	118.7	130.6	149.4	164.6	167.7	166.1
2007-11LdRC	12/25/2011	116.8	109.6	106.2	104.5	105.7	109.4	115.8	125.3	141.1	149.4	151.4	151.7
2007-11LdRC	12/26/2011	112.9	108	106.1	104.9	107.6	111.9	118.9	129.7	147.9	165.1	169.7	170.7
2007-11LdRC	12/27/2011	115	110.1	108.2	107.6	109.7	116.1	128.4	142.7	164.4	180.8	186.1	185.2
2007-11LdRC	12/28/2011	118.1	112.5	109.3	108.2	110.7	118.5	130.4	146.1	165.8	183.1	188.6	189.8
2007-11LdRC	12/29/2011	124.1	116.5	110.9	108.9	111.4	123.1	134.1	153.9	173.3	182.4	183.3	188.5
2007-11LdRC	12/30/2011	127.3	119.6	114.3	112	113.4	122.8	136.3	152.9	175.9	181.9	188.1	190
2007-11LdRC	12/31/2011	117	112.7	114.5	108.8	110.8	118.3	125.4	143.6	167.1	181	182.8	181.2

SetID	Date	HR1	HR2	HR3	HR4	HR5	HR6	HR7	HR8	HR9	HR10	HR11	HR12
Based on Hour Ending		1	2	3	4	5	6	7	8	9	10	11	12
Total MW by Hour		43,094	41,187	40,128	39,766	40,638	43,694	49,080	55,095	61,378	65,809	67,421	67,847
Total Obs by Hour		365	365	365	365	365	365	365	365	365	365	365	365
Off Peak Hrs MW		43,094	41,187	40,128	39,766	40,638	43,694	49,080					
Total Off Peak Obs by Hour		365	365	365	365	365	365	365					
Mid Peak Hrs MW									55,095	61,378	65,809	67,421	67,847
Mid Peak Obs by Hour									365	365	365	365	365
Priority Peak Hrs MW													
Priority Peak Obs by Hour													
Total MW Check		0.00	0.00	0.00	0.00	0.00	0.00	0.00	0.00	0.00	0.00	0.00	0.00
Total Obs Check		0	0	0	0	0	0	0	0	0	0	0	0

Total Avg. MW	160.86
Off Peak Avg. MW	126.77
Mid Peak Avg. MW	181.68
Priority Peak Avg. MW	199.02

SetID	Date	HR13	HR14	HR15	HR16	HR17	HR18	HR19	HR20	HR21	HR22	HR23	HR24	DOW
2007-11LdRC	1/1/2011	179.5	178.4	177.1	173.5	181.3	191.9	198.6	188.1	174.8	160.8	142.7	122	6
2007-11LdRC	1/2/2011	175.4	168.3	164	165.6	170.8	181.3	198.3	195.1	181.3	160.9	144.4	120.2	7
2007-11LdRC	1/3/2011	177.6	177.3	174.3	176.9	179.3	185.9	208.6	206.6	189.8	167.1	142.8	120.6	1
2007-11LdRC	1/4/2011	171.2	174.4	173.2	174.3	176.6	186.1	207.3	200.9	186.6	165.1	152.8	120.1	2
2007-11LdRC	1/5/2011	175.1	176.8	177.1	178.4	178.5	184.5	207.1	204	187.6	165.8	145.1	120.1	3
2007-11LdRC	1/6/2011	179.1	182.4	178.5	180.2	181.6	187.7	208.2	203.4	187.6	170	144	122.3	4
2007-11LdRC	1/7/2011	176.8	177.1	176.9	176.2	177.4	182.2	200.1	195.9	179.8	164.7	143.2	124.1	5
2007-11LdRC	1/8/2011	167.5	168.1	170.4	172.2	174.8	183.1	197.3	196.6	182.4	166.5	142.4	124.6	6
2007-11LdRC	1/9/2011	163.4	161	157.8	160.9	162.9	180.1	193.9	188.1	174.6	156.7	134.9	116.8	7
2007-11LdRC	1/10/2011	170.4	173	168.1	172.4	174.9	179.7	203.2	199	183.9	164.7	137.9	117.7	1
2007-11LdRC	1/11/2011	173.8	174.3	172.2	174.8	177.9	178.1	200.5	198.1	180.6	164.2	137.1	116.2	2
2007-11LdRC	1/12/2011	164.2	167.6	169.2	169.5	169.9	174.9	195.9	194.1	180.3	162.1	135.9	116	3
2007-11LdRC	1/13/2011	176	174.4	174.3	177.5	179.5	185.3	206.6	204.4	186.3	167.5	140.2	121	4
2007-11LdRC	1/14/2011	179.2	177.4	177.4	180.3	179	183.5	200.9	192.3	185.4	169	147.9	126.9	5
2007-11LdRC	1/15/2011	174.8	174.3	173.5	175.1	180.4	186.4	202	199.9	184.8	170.7	148.4	129	6
2007-11LdRC	1/16/2011	174.3	173.8	172.6	174.1	175.7	181.9	204.7	199.4	189.7	175.7	151.7	131.6	7
2007-11LdRC	1/17/2011	190.3	186.2	182.6	182.7	183.4	189.1	212.2	207.9	195.7	177.6	150.3	127.3	1
2007-11LdRC	1/18/2011	182.3	178.7	176.6	177	178.7	185.7	204.7	203.4	188.1	173.2	140.9	121.7	2
2007-11LdRC	1/19/2011	184.7	182.6	183.7	183.9	185.4	190	207.5	203.4	188.3	167.8	143.4	122.2	3
2007-11LdRC	1/20/2011	180.1	178	177	180	181.1	189.7	207.5	204	186.3	170.1	142.9	122.2	4
2007-11LdRC	1/21/2011	188.1	186.7	185.9	183.5	181.8	188.2	197	190.7	175.9	160.3	139.7	121.6	5
2007-11LdRC	1/22/2011	159.9	159.5	157.1	162.1	166.5	172.9	187.1	188.6	173	157.5	137.8	120.2	6
2007-11LdRC	1/23/2011	168.4	166.7	169.2	172.6	175.5	177.3	193.7	197.7	182.8	167.1	140.5	121.9	7
2007-11LdRC	1/24/2011	185.4	184.5	186.9	187.6	189.5	196.5	213.7	214.5	192.5	166.3	145.5	124.2	1
2007-11LdRC	1/25/2011	186.6	187.6	188.7	188.2	192.3	196.8	216.7	211.7	196	174.3	144.9	123.4	2
2007-11LdRC	1/26/2011	187.4	187.4	189.3	189.8	190.6	191.6	207.9	209.5	193.7	172.8	146.4	124.7	3
2007-11LdRC	1/27/2011	177	183.7	184.8	187.9	187.8	190.7	209.1	209.3	192.4	173.1	146	125.6	4
2007-11LdRC	1/28/2011	185.3	188.7	187.8	190	190.3	191.2	201.6	200.9	184	168.6	148.2	127.6	5
2007-11LdRC	1/29/2011	172.8	174.1	173.7	174.9	179.5	185.3	193.8	190.1	177.5	161	141.2	122.6	6
2007-11LdRC	1/30/2011	168.6	168.7	171.1	173	178.5	182.7	197.2	199.2	186.9	164.8	141.3	119.7	7
2007-11LdRC	1/31/2011	183.5	184.8	183.9	185.8	187.6	186.9	211.6	210.1	194.2	172.2	146.4	125.7	1
2007-11LdRC	2/1/2011	174.7	171.9	169.7	170.5	174.4	182.8	203.2	199.7	185	162.4	137.5	117.6	2
2007-11LdRC	2/2/2011	172	169.1	168.6	171.9	176.6	184.3	200.7	198.1	182.6	161.6	135.5	114.8	3
2007-11LdRC	2/3/2011	169.7	168.7	164.8	168.4	176.1	184.8	205.5	199.7	182.8	161.6	138.8	117.3	4
2007-11LdRC	2/4/2011	173.9	173.3	172	174.7	179.4	183.5	198.1	195.5	183.4	164.8	143.8	122.4	5
2007-11LdRC	2/5/2011	174.7	175.2	176.1	181.5	189.4	188.6	202.2	206	189.5	169.5	143.7	123.9	6
2007-11LdRC	2/6/2011	181.1	181.5	177.6	179.7	180.9	183.5	200.2	212.2	196.5	172.6	144.9	122.8	7
2007-11LdRC	2/7/2011	194.1	192.6	193.3	195.6	196.9	198.3	214.3	214.7	201.5	178.5	149.8	126.1	1
2007-11LdRC	2/8/2011	187.5	188.4	186	190.7	189.5	193	206.9	212.1	196.5	176.7	146	122.9	2
2007-11LdRC	2/9/2011	187.9	186.6	189.2	191.3	193.4	195.4	207.2	209.8	194.5	177.1	149.8	125.4	3
2007-11LdRC	2/10/2011	184.6	188.2	188.3	191.5	191.4	191.9	205.5	211.1	195.2	174.5	146.5	123.5	4
2007-11LdRC	2/11/2011	181.4	181.8	182.1	182.8	179.4	184.6	199.1	197.4	187	169	142.7	124.1	5
2007-11LdRC	2/12/2011	161.1	159.8	160.3	162.8	166.4	173	187.1	188	175.4	161.4	138.8	121.2	6
2007-11LdRC	2/13/2011	156.5	156.3	155.1	156.3	161.5	168.4	183.8	190.3	176	160.1	135.3	112.3	7
2007-11LdRC	2/14/2011	171.5	172.6	171.8	173.7	174.9	178.9	191.7	197.3	182.8	162.4	137.5	118.1	1
2007-11LdRC	2/15/2011	172.9	177.1	177.4	178.7	180.1	184	199.1	202.1	191	167.1	138.9	119.7	2
2007-11LdRC	2/16/2011	175.4	173.8	172.5	175.6	177.1	181	195.5	202.6	184.8	166.4	141.1	119	3
2007-11LdRC	2/17/2011	175.7	173.9	175.8	179.8	182.2	182.8	197.2	203.6	187.4	169.1	145.1	120.1	4
2007-11LdRC	2/18/2011	176.3	176.5	179.2	179.6	177.1	179.3	192.5	195.8	180.2	168.9	143.9	124.9	5
2007-11LdRC	2/19/2011	161.9	159.3	159	160.8	167.4	172.3	182.7	186.7	174.3	159.9	139	120.6	6
2007-11LdRC	2/20/2011	157.8	156.6	158.4	161.7	164.9	169.9	183.1	191.3	178.1	161.1	137.6	119.9	7
2007-11LdRC	2/21/2011	166.3	166.6	169.1	171	177.8	182.3	198.1	206.2	189.2	169.6	138.6	119.6	1
2007-11LdRC	2/22/2011	173.9	174.5	178.4	183.4	184.2	187.9	199.8	209.2	193.9	157.3	143.5	121.7	2
2007-11LdRC	2/23/2011	178.7	178.5	180.9	182.2	184	185.9	196.8	206.2	191	173.9	145.8	124.6	3
2007-11LdRC	2/24/2011	180.1	181.5	182.3	183.9	185.4	186.3	197.7	209.6	193.4	174	145.3	123.6	4
2007-11LdRC	2/25/2011	180.7	178.7	177	178.4	177.6	178.7	186.6	191.9	180.4	165.3	141	123.2	5
2007-11LdRC	2/26/2011	167.3	165.5	166.4	169.2	173.8	177.4	187.4	193.2	179.6	163.2	142.7	122.8	6
2007-11LdRC	2/27/2011	163.2	165.2	165	166.8	172.3	178.5	188.7	196.2	181.9	160.8	137.7	116.3	7
2007-11LdRC	2/28/2011	177.2	177.6	179.3	182.4	179.8	183.9	196.6	205.9	190.9	168.7	142.4	121.2	1
2007-11LdRC	3/1/2011	174.7	176.1	177	181.4	182.6	182.8	191.5	198.5	186.2	167.7	143.6	120.1	2
2007-11LdRC	3/2/2011	174.2	176.1	177.7	179.5	180.7	182.9	193.1	199.4	186.5	170	142.4	119.6	3
2007-11LdRC	3/3/2011	177.8	180.1	178.7	181	185.5	183.8	194	202.2	190.3	165.1	145.9	122.8	4
2007-11LdRC	3/4/2011	179.9	180.7	182.4	183.8	180.2	180.1	189.5	193.3	181.2	166.9	146	126.5	5
2007-11LdRC	3/5/2011	174.3	171.2	173.4	176.4	178.5	181.2	187.4	194.6	182.3	168	148.1	128.4	6
2007-11LdRC	3/6/2011	166.8	168.4	167.4	167.1	172	177.2	188.5	199.1	186.8	167.7	143.5	123.8	7
2007-11LdRC	3/7/2011	183.8	185.8	187.1	188.5	188.3	190.2	199.4	209.7	196.9	178.3	152.3	128.8	1
2007-11LdRC	3/8/2011	194.4	195.5	197.3	199	197.9	197.9	207.6	214.4	201.8	183.6	156.9	134.2	2
2007-11LdRC	3/9/2011	184	179.6	179.5	182.6	183	187.5	203.1	208.2	192.5	175.1	148.6	124.9	3
2007-11LdRC	3/10/2011	169.7	168	167.1	167.8	171.8	176.9	187.8	191.7	180	162.8	139.3	119	4
2007-11LdRC	3/11/2011	170.3	170.1	170.5	171	172.8	175.5	183.7	191.1	176.9	165.6	141.8	123.5	5
2007-11LdRC	3/12/2011	167.1	163	159.5	159.6	163.4	166.5	176.3	182.8	172.4	156.5	136.2	117.7	6
2007-11LdRC	3/13/2011	154.6	155.6	156.1	156.7	162.7	168.7	178.5	183.6	174.7	155.8	131.8	113.2	7
2007-11LdRC	3/14/2011	162.4	160.4	158.7	160.2	162.4	168.7	179.8	194.8	181.7	162.7	135.6	116.2	1
2007-11LdRC	3/15/2011	162.7	161.7	158.6	159.5	161.9	165.5	180.1	190.5	179.5	163.6	134	113.6	2
2007-11LdRC	3/16/2011	161.2	159.4	163.9	165.8	168.2	172.1	184.8	191.8	180.9	162.7	137.4	116.3	3
2007-11LdRC	3/17/2011	170.2	171.8	171.6	175.6	176.4	178.3	183.3	192.7	181.4	165.7	140.1	119.7	4
2007-11LdRC	3/18/2011	171.3	171.2	170.4	171.3	171.1	175.7	188.4	188.4	178.5	164.1	142.8	123.5	5
2007-11LdRC	3/19/2011	164.8	161.8	162.3	163	168.4	173.1	184.1	187.4	176.9	164	142.3	123.4	6
2007-11LdRC	3/20/2011	163	161.8	161.8	162.8	166	171.8	180.1	190.1	179.5	163.8	142.1	122.5	7

SetID	Date	HR13	HR14	HR15	HR16	HR17	HR18	HR19	HR20	HR21	HR22	HR23	HR24	DOW
2007-11LdRC	3/21/2011	180.6	179.9	182.4	184.8	184.5	187.9	195.7	205.9	192.5	175.1	147.5	127.1	1
2007-11LdRC	3/22/2011	183.8	184.5	187.8	189.5	192.4	194.2	199.9	209.8	197.1	182	152.2	131.5	2
2007-11LdRC	3/23/2011	191	191.6	191.8	194.9	197.9	197.5	205.2	214	203.1	185	158.5	135.2	3
2007-11LdRC	3/24/2011	196.6	199.7	202.4	201.2	201.3	201.1	206.8	213.4	201.1	184.2	156.4	135.3	4
2007-11LdRC	3/25/2011	191	191.2	190.1	189.7	190.1	194.7	203.3	204.3	192.7	177.2	154.6	133	5
2007-11LdRC	3/26/2011	168.1	164.3	163	162.3	166.9	173.2	183.6	186.6	175.4	163.9	141.4	124.1	6
2007-11LdRC	3/27/2011	159.5	156.6	157.5	158.9	165.1	171	176.4	185.4	177.1	162.8	139.5	117.9	7
2007-11LdRC	3/28/2011	177.3	177.6	177.4	179.4	183.6	188.9	196.3	207.6	193.6	172.4	149.3	125.2	1
2007-11LdRC	3/29/2011	182.8	182.3	183.1	185.8	184	191.2	200.2	206.3	195.1	177.9	152.1	126.7	2
2007-11LdRC	3/30/2011	189.4	188.8	188.3	189.4	189.5	192.4	200	204.1	192.5	175	151.3	125.3	3
2007-11LdRC	3/31/2011	183.4	183.5	183.7	183	183.1	185.9	193.3	202.4	191.2	171.9	150.3	126.6	4
2007-11LdRC	4/1/2011	180.1	179.1	180	180	179.6	180	192.8	184.9	178.7	166.8	134.2	117.7	5
2007-11LdRC	4/2/2011	167.9	169.5	167.5	168	171.7	177.2	185.5	190.4	175.9	158	135	115.2	6
2007-11LdRC	4/3/2011	163.2	164.2	166.1	165.1	174.6	175	190.6	187.5	172.4	158.3	129.6	112.8	7
2007-11LdRC	4/4/2011	177	180.1	177.6	181.1	179.3	179.9	195.2	196.4	176.3	164.9	128.5	114.3	1
2007-11LdRC	4/5/2011	179.6	178.9	182.5	178	179.9	184.8	202.7	194.3	179.3	164	130	114.8	2
2007-11LdRC	4/6/2011	178.4	179.6	180.8	180	181.3	184.3	196.3	200.7	185.6	164.4	134	115.2	3
2007-11LdRC	4/7/2011	181.2	182.8	185.1	185.4	184.1	185.8	196.9	201.6	192.2	169.4	134.4	117.1	4
2007-11LdRC	4/8/2011	188.4	189	190.1	190.1	194.7	192.9	201.4	198	189.4	172.4	152	131.8	5
2007-11LdRC	4/9/2011	178	174.6	174.4	174.2	180.1	183.1	189.9	198.6	186.8	165.8	146.4	128.9	6
2007-11LdRC	4/10/2011	167.9	167.3	169.8	171.2	176.6	181.7	191.4	192.4	181.6	166.1	144.7	123.6	7
2007-11LdRC	4/11/2011	190.4	188.1	190	190	189	190.6	201.7	208.6	198.4	168.1	154.4	128.7	1
2007-11LdRC	4/12/2011	186.2	185.8	184.5	184.4	186	188.8	199.1	209.8	197.8	174.6	145.8	125.7	2
2007-11LdRC	4/13/2011	188.2	189	190.6	190.6	188.9	189.6	195.7	207.5	192.5	174.1	147	128.8	3
2007-11LdRC	4/14/2011	190	189	189.4	190.4	191.1	192.1	198.6	210.8	198.8	171.8	147.7	127.1	4
2007-11LdRC	4/15/2011	188.9	188.6	187.3	189.2	188.1	186.8	191.4	198.3	186	172.3	147.2	129.9	5
2007-11LdRC	4/16/2011	177.1	174	174.5	177	180.4	182.5	186.7	195.2	184.4	168.4	146.1	128.9	6
2007-11LdRC	4/17/2011	171.7	170.7	170.7	172.6	177.4	182.7	187.8	201.1	180.7	164.7	133.3	117.8	7
2007-11LdRC	4/18/2011	189.9	190	191.5	191.2	189.4	191.8	202.4	201.1	190	167.5	132.3	117.4	1
2007-11LdRC	4/19/2011	185.1	182.8	182.3	186.2	182.1	185.8	205.5	198.1	181.7	164.5	132.8	115.1	2
2007-11LdRC	4/20/2011	185.2	182.5	185.1	185.8	184.3	184.9	189.7	201.9	188.6	171.3	144.3	124.9	3
2007-11LdRC	4/21/2011	182.5	185.5	186.2	188.8	187.3	187.8	193.2	205.9	194	175.8	145.4	125.8	4
2007-11LdRC	4/22/2011	182.3	184.8	185.5	185.8	184	182	182.9	189.9	178.3	166.5	143.7	125.5	5
2007-11LdRC	4/23/2011	168.4	168.6	167.1	168.6	170.8	173.9	180	185.2	176.8	156.6	139	122.4	6
2007-11LdRC	4/24/2011	161.7	162.4	161.6	162.6	167.3	171.8	178	188.6	176.7	156	137.2	120.3	7
2007-11LdRC	4/25/2011	181.1	181.2	180.7	183.1	183.3	183.5	188.4	201.3	188.6	168.5	140.1	120.2	1
2007-11LdRC	4/26/2011	180.9	183.2	183.9	187.3	187.9	184.5	190.4	201.4	190.3	167.5	141.8	120.5	2
2007-11LdRC	4/27/2011	185.6	190.1	190	191	190.3	189.4	195.3	208.7	193.1	162.3	146.4	127.5	3
2007-11LdRC	4/28/2011	173	173.3	178.4	178	178.8	184.5	196.3	192.1	177.9	162.3	141.1	122.9	4
2007-11LdRC	4/29/2011	183.2	181.7	183.5	185.8	184.9	183.7	187	194.7	183.1	169.3	145.8	127.2	5
2007-11LdRC	4/30/2011	170.5	171.6	173.9	175.3	178.7	181.5	187.4	193.1	181.5	167.3	145.6	124	6
2007-11LdRC	5/1/2011	161.3	163	163.4	166.5	169.5	175.1	180.3	191.9	181.2	162.2	138.5	123	7
2007-11LdRC	5/2/2011	184.7	186.9	187.3	187.3	185.5	185.1	188.9	202.8	190	170.9	143.2	120.1	1
2007-11LdRC	5/3/2011	189.3	191.6	192.2	192.6	190.5	192.3	197.9	207.3	194.6	175.1	146.2	124.6	2
2007-11LdRC	5/4/2011	190.7	192	195.2	196.1	197	193.9	197.1	209.8	197.4	177	144.7	125.1	3
2007-11LdRC	5/5/2011	190.2	194	196.8	199.8	197.1	194	194.5	207.2	196.2	177.2	149	128.2	4
2007-11LdRC	5/6/2011	192.9	198	196.7	194.3	192.5	188.5	186.9	198.3	189	173.9	150.1	130.4	5
2007-11LdRC	5/7/2011	173.1	174	175.7	176.9	178	178.9	180.4	190.3	180.7	169.8	145.2	127.4	6
2007-11LdRC	5/8/2011	165	165.6	167.3	168.6	172	175.2	178.1	187.2	178.8	163.2	141	123.7	7
2007-11LdRC	5/9/2011	193	194.8	193.8	191.9	189	186.4	192.7	205.5	191.9	174.3	143	124.3	1
2007-11LdRC	5/10/2011	186.4	188.9	191	194	191.5	187.6	191.6	205.8	193.3	173.9	145.1	123.1	2
2007-11LdRC	5/11/2011	189.3	189.7	194.3	196.4	194.8	190.9	193.5	204.4	192.7	174.7	144.8	124.5	3
2007-11LdRC	5/12/2011	188.5	191.9	190.6	191.2	188.5	186.6	187.6	200.1	192.6	174.1	147	124.4	4
2007-11LdRC	5/13/2011	189.3	191.5	191.3	188	183.3	181.8	184.4	195.9	183.8	156.6	146.4	127.1	5
2007-11LdRC	5/14/2011	175.7	176	176.8	178.5	179.5	181	183.3	185.5	180	162.9	136.2	120	6
2007-11LdRC	5/15/2011	167.9	167.9	169.5	173.9	178.4	179.7	185	193.3	188.7	160	130.7	119.5	7
2007-11LdRC	5/16/2011	193.2	192.9	194	195.5	194.5	190.5	190.7	203.5	193.2	174.3	146.1	124	1
2007-11LdRC	5/17/2011	192.5	193	194.8	193.8	192.7	190.2	191.7	204	194.6	174.3	145.9	126.9	2
2007-11LdRC	5/18/2011	191.9	192.9	192.7	191.7	187.3	184	189.2	200.4	191.9	174.7	148.1	125.9	3
2007-11LdRC	5/19/2011	183.6	180.8	178.4	178	179.1	178.1	182.7	190.3	182.3	164.1	139.2	121.3	4
2007-11LdRC	5/20/2011	184	187.9	186.4	187.1	184.8	182.2	183.2	189.9	182.7	168.2	146.4	126.6	5
2007-11LdRC	5/21/2011	179.1	169.6	171.6	171.9	174.4	176.2	179.2	185.7	179.7	161.1	145.2	126.9	6
2007-11LdRC	5/22/2011	171.8	172.7	171.6	173.1	176.5	181	185.7	192.6	187.1	173.1	136.7	124.7	7
2007-11LdRC	5/23/2011	199.8	201	198.9	197.3	196.1	193.2	195.8	208.6	199.5	179.3	151.3	128.8	1
2007-11LdRC	5/24/2011	194.5	195.2	195.4	192.7	193.9	189.9	192.6	203.1	197.9	177	147.5	127.8	2
2007-11LdRC	5/25/2011	193.3	194.5	195.9	197.1	195.9	193.2	194.2	203.8	193.5	177.4	148.1	127.3	3
2007-11LdRC	5/26/2011	192.9	194.8	195.6	198.1	195.2	191.5	190	202.6	195.4	178.4	148.7	128.6	4
2007-11LdRC	5/27/2011	191	191.5	191.9	192	188.7	185.5	184	192.3	183.8	170.5	148.3	134.7	5
2007-11LdRC	5/28/2011	176.2	176.8	177	177.3	175.6	179.9	182.5	185.4	181.9	168.2	148	131.9	6
2007-11LdRC	5/29/2011	169.6	169.7	171.1	172.9	174.4	177.2	178.3	188.2	181	166.8	145	125.7	7
2007-11LdRC	5/30/2011	171.8	172.4	175.1	177.3	181.2	184.5	189.7	196.8	190.3	166.8	147.7	127	1
2007-11LdRC	5/31/2011	194.2	199.5	200.8	205.2	203.5	198.9	200.4	211.5	205.5	184.7	154.8	132.4	2
2007-11LdRC	6/1/2011	196.7	198.4	202	204.6	204.6	201.8	202.2	211.9	203.5	188	161.2	138.3	3
2007-11LdRC	6/2/2011	199.4	199	200.6	201.8	199.1	195.8	196.4	204.8	200.5	185.1	159.8	137.2	4
2007-11LdRC	6/3/2011	200.2	200.9	201.8	203.2	202.2	198.3	196.7	203.4	198	184.1	162.8	142.6	5
2007-11LdRC	6/4/2011	188.1	186.8	187.4	188.7	191	189.8	190.1	196.3	191.8	179.6	159.6	139.6	6
2007-11LdRC	6/5/2011	179.1	178.4	180.3	181.8	185.2	187	186.6	196.6	193	179.1	156.6	135.6	7
2007-11LdRC	6/6/2011	196.1	199.1	200.5	200.4	198.1	193.6	194.5	204.1	199.2	183	157.6	134.4	1
2007-11LdRC	6/7/2011	194.7	196.5	197.4	199.3	197	193	192.9	202	195.9	171.6	157	135	2

SetID	Date	HR13	HR14	HR15	HR16	HR17	HR18	HR19	HR20	HR21	HR22	HR23	HR24	DOW
2007-11LdRC	6/8/2011	197.2	197.7	199.9	200.9	200.2	195.8	195.6	203.8	197.7	183.8	159.1	136.1	3
2007-11LdRC	6/9/2011	197.2	198.7	198.6	200.8	200.1	193.3	194.1	201.6	196.1	180.7	158.3	145.5	4
2007-11LdRC	6/10/2011	191.1	191.4	191.5	194.7	196.5	195.8	191.5	199	193.5	180	159.1	141.8	5
2007-11LdRC	6/11/2011	180.4	182.4	182.3	184	185	187.1	185.6	192.4	188.8	174.9	153.9	139.3	6
2007-11LdRC	6/12/2011	174.9	173.2	175.6	177.3	182.6	184.2	186	194.8	190.3	176.6	155.4	134.8	7
2007-11LdRC	6/13/2011	201.1	196.3	202.6	203	201.9	200.8	199.4	207.9	202.8	186.5	161.7	139.6	1
2007-11LdRC	6/14/2011	198.4	201.3	202.8	203.8	199.3	198	198.6	203.5	202.8	186.5	160.9	138	2
2007-11LdRC	6/15/2011	195.4	200.9	201.4	199.9	200.6	196.7	194.1	201.8	198.3	182.2	159.1	138.3	3
2007-11LdRC	6/16/2011	196.3	199.5	202.7	203.3	202.2	198.1	197	204.5	202.2	187.4	162.3	139.8	4
2007-11LdRC	6/17/2011	197.7	195.9	197.7	200.4	199.4	197.4	194.4	199.8	196.2	183.1	149.3	139.2	5
2007-11LdRC	6/18/2011	184.3	183.4	185.8	187.3	189.6	189.4	187.9	194.2	190.5	179.5	158.6	139.7	6
2007-11LdRC	6/19/2011	179.2	178.4	178.9	182.1	184.3	183.7	184.2	190.5	187.9	176.5	158.4	136.3	7
2007-11LdRC	6/20/2011	200.4	197.8	196.6	193.4	192	192	194.7	202.1	197.7	181.2	158.4	137.6	1
2007-11LdRC	6/21/2011	191.9	192.6	192.8	192	191.5	192.7	195.8	198.1	193.2	162.7	151.6	135.7	2
2007-11LdRC	6/22/2011	194	194.2	194.3	193	191.8	193.2	197.4	203	197.1	181.7	164	135	3
2007-11LdRC	6/23/2011	196.7	198	200.2	201.5	198.4	194.1	195.6	202.8	197.6	165.1	150.5	136.2	4
2007-11LdRC	6/24/2011	196.2	197.3	197.6	193.4	193.2	191.4	193.3	197	191.4	182.3	157.9	139.3	5
2007-11LdRC	6/25/2011	184.9	186.3	187.5	188.8	190.6	191	189.4	195.2	188.9	175.5	157.9	139.3	6
2007-11LdRC	6/26/2011	177.3	177	177.5	178.6	181.3	183.8	187.1	193.5	190.7	176	155.4	135.1	7
2007-11LdRC	6/27/2011	196.4	195.2	195	193.7	193	192.6	193.4	202.6	200.7	180.1	160.1	136.3	1
2007-11LdRC	6/28/2011	197	195.9	198.5	197.3	197.1	196.4	196.5	204.9	200.9	187.8	160.1	138.7	2
2007-11LdRC	6/29/2011	201.9	201.3	200.8	199.4	197.3	196.1	197.9	204.7	201.6	188.3	164.4	144.9	3
2007-11LdRC	6/30/2011	202.7	201.2	201.6	200.2	200.4	199.2	198.1	205.7	203.3	188.9	164.2	140.2	4
2007-11LdRC	7/1/2011	196.7	199.7	204.2	205.8	203.5	200.4	196.3	200.7	197.3	182.3	156.6	135.9	5
2007-11LdRC	7/2/2011	177.9	179.7	181	182.9	185.7	186.3	187.8	194.4	191.8	175.8	151.4	132.7	6
2007-11LdRC	7/3/2011	171.2	171.7	172.8	174.4	177.8	180.8	184.3	192.9	190.7	175	151	131.7	7
2007-11LdRC	7/4/2011	183.2	183.3	184.3	186.9	189.9	190.5	186.1	185.7	177.4	176	154	136.3	1
2007-11LdRC	7/5/2011	208.5	209.7	209.9	207.5	205.2	202.8	204.7	213.7	210.6	188.1	157.8	135.3	2
2007-11LdRC	7/6/2011	202.8	205.3	207	208.9	207.4	205.2	203.7	213.7	208.7	186.1	160.3	139.7	3
2007-11LdRC	7/7/2011	201.2	199.4	199.1	198.9	197	197.3	200.2	214.4	201.9	185.2	156	133.9	4
2007-11LdRC	7/8/2011	203	201.7	205.2	200.5	198.1	195.9	196.8	203.2	198.3	181.1	155.7	136.3	5
2007-11LdRC	7/9/2011	189.2	187.5	186.4	188.9	189.8	191.6	191.2	197.8	195.2	179.5	153.9	134.4	6
2007-11LdRC	7/10/2011	178.4	177.9	175.7	177.5	182.6	187.9	189.2	196.7	193.3	177.5	151.6	132.6	7
2007-11LdRC	7/11/2011	205.3	208.9	210.6	207.9	204.2	202.8	203.2	214.9	206	186.6	157.1	134.5	1
2007-11LdRC	7/12/2011	201.4	201.7	203.7	205.8	205.3	202.3	203.7	213.9	209.6	187.3	156	134.8	2
2007-11LdRC	7/13/2011	203.3	203	207.4	207.9	207.2	205.8	204	213.7	206.9	188.2	157.5	135	3
2007-11LdRC	7/14/2011	205.3	207.9	210.3	211.8	209.1	205.8	205.5	214.6	211.6	189.8	160.8	137.2	4
2007-11LdRC	7/15/2011	199.4	201.7	201	199.1	199.7	196.7	196	204.5	198.6	170.8	158	136.8	5
2007-11LdRC	7/16/2011	190.7	192.2	191.9	191.2	195.9	196.5	194.1	202.8	197	182.9	155.5	135.4	6
2007-11LdRC	7/17/2011	178.2	181	179.5	182.3	185.4	189.3	191.2	201.9	198.8	179.7	153.7	133.3	7
2007-11LdRC	7/18/2011	205	209.1	206.2	206.2	207.4	204	203.2	214.4	209.9	188.7	158.4	136.2	1
2007-11LdRC	7/19/2011	208.2	208.2	210.1	207.9	204.3	201.7	201.5	212	207	186.4	156.6	135.2	2
2007-11LdRC	7/20/2011	198.6	199.2	198.3	201	202	200.1	201	211.5	207.7	185.4	155.2	133	3
2007-11LdRC	7/21/2011	191.3	193.5	195.9	196	197.3	196	196	210.9	204.7	185.5	154.7	133.7	4
2007-11LdRC	7/22/2011	202.8	201.4	204.2	202.2	202	197.8	195.9	204.3	200.1	186.7	158	136.9	5
2007-11LdRC	7/23/2011	189.8	191	191.6	193.5	197	198.1	196.7	204.8	198.4	184.8	157.8	137.2	6
2007-11LdRC	7/24/2011	181.4	181	184	186.7	190.5	193.5	197	209.1	203	184.8	156	135	7
2007-11LdRC	7/25/2011	215.3	218.7	217.8	217.9	215.3	210.8	208.9	221.9	215.5	196.8	163.8	140.6	1
2007-11LdRC	7/26/2011	209.7	213.2	217.8	217.2	216	209.2	208.4	218.7	213.7	193.3	158.6	135.5	2
2007-11LdRC	7/27/2011	206	209.9	211.3	206.5	208.9	206.9	204.5	214.1	205.2	186	158.1	136.4	3
2007-11LdRC	7/28/2011	208.7	206.7	210.1	212.8	210.6	208.5	211.3	220.3	211.8	190.4	157.9	135.9	4
2007-11LdRC	7/29/2011	203.2	201.9	202.2	201.4	200.2	196	194.8	201.9	198.3	182.4	157.3	137.2	5
2007-11LdRC	7/30/2011	186.6	187.3	189.8	188.4	191.3	194.3	193.2	201.2	197.5	182.6	155.8	136.3	6
2007-11LdRC	7/31/2011	181	182.3	183.3	185.1	187	189.2	191.2	205.5	202	183.3	153.9	133.4	7
2007-11LdRC	8/1/2011	207.4	207.3	209.3	209.9	208.6	205.7	207.1	220.9	213.8	195.4	165.3	142	1
2007-11LdRC	8/2/2011	209.6	210	212.2	212.7	210.3	207.3	209.3	220.7	214	196.2	164.4	141.4	2
2007-11LdRC	8/3/2011	208.7	211.5	210.6	209.3	206.6	204.9	203	211.5	205.7	189.6	163.2	139.8	3
2007-11LdRC	8/4/2011	200.4	202.9	205	208.4	206	205	203.2	211.8	206.3	190.8	160.6	138.7	4
2007-11LdRC	8/5/2011	200.5	204.1	205.6	207.4	207	204.4	203.3	211.1	204.3	189.5	165.8	143.5	5
2007-11LdRC	8/6/2011	190.4	192.3	193.6	194.4	196.5	198.3	200.9	208.9	202	187.6	164.4	142.8	6
2007-11LdRC	8/7/2011	188.4	189.7	188.5	190	192.8	197.7	200.4	211.1	202	184.6	161.7	141.4	7
2007-11LdRC	8/8/2011	217.7	220	221.8	222.2	218.9	215.6	218.1	229	220.7	197.4	167.4	143.9	1
2007-11LdRC	8/9/2011	217.8	219.8	222.5	222.8	217.8	210.5	210.8	221.8	215.5	193.5	165.2	142.8	2
2007-11LdRC	8/10/2011	216.2	219.2	219.5	219.3	216.8	215.9	215.6	226.8	217.1	198.7	169.9	145.2	3
2007-11LdRC	8/11/2011	213	216.1	215.2	215.9	212.8	211.6	212.2	224.1	215.9	194.8	165.2	141.8	4
2007-11LdRC	8/12/2011	207	207.9	210.3	213.2	212.7	207.4	204.9	213.8	205.1	186.4	164.5	142.3	5
2007-11LdRC	8/13/2011	189.7	191.7	191.7	194.8	198.7	200.2	200.5	209.6	199.7	184.5	160.5	140.6	6
2007-11LdRC	8/14/2011	181.8	182.7	186.4	186.4	189.7	193.6	197.3	208.9	200.9	183.3	159.6	138.2	7
2007-11LdRC	8/15/2011	214.9	213.4	213.4	210.3	210.8	209.6	211.9	226.2	215.5	193.1	164.9	141.8	1
2007-11LdRC	8/16/2011	209.3	211.1	208	207	206.4	204.4	205.4	217.2	207.6	188.5	162.4	142.4	2
2007-11LdRC	8/17/2011	207.3	211.3	208.9	209.7	208.6	206	206	218.3	209	189.2	162.8	140.9	3
2007-11LdRC	8/18/2011	209.6	212.1	214	213.7	210.2	203.6	204.9	214.9	206	188.9	164.4	148.6	4
2007-11LdRC	8/19/2011	203.3	203.4	204.4	204.6	205.7	204.9	215.9	214.7	203.6	184.9	165.8	145.7	5
2007-11LdRC	8/20/2011	190.5	191.7	192.1	191.9	192.9	192.8	191.6	202.7	193.8	179.9	157.5	138	6
2007-11LdRC	8/21/2011	179	181.4	183.6	186.6	189.1	190.9	193.6	206	199.1	178.6	155.6	136.5	7
2007-11LdRC	8/22/2011	207.3	209.9	207.3	210.5	206.7	205.9	207.7	221.6	208.6	186.7	157.8	137.4	1
2007-11LdRC	8/23/2011	202.3	206.4	203.9	200.6	199.8	195.7	199.9	215.6	203.2	182.9	155.5	134.3	2
2007-11LdRC	8/24/2011	202.2	205.1	207.3	207.4	204.6	203.7	205.4	216.5	204.9	185	157.9	137.6	3
2007-11LdRC	8/25/2011	206.6	207.4	208.7	209.7	208.9	203.6	207.4	221.3	208.6	187.9	159.6	138.8	4

SetID	Date	HR13	HR14	HR15	HR16	HR17	HR18	HR19	HR20	HR21	HR22	HR23	HR24	DOW
2007-11LdRC	8/26/2011	205.9	207.4	208.9	212.4	209.9	204.6	202.6	215.8	205.1	189.6	166.3	144.5	5
2007-11LdRC	8/27/2011	192.5	191.6	195.2	196.1	197.3	194.8	196.1	201.9	192.4	177.7	157	139.2	6
2007-11LdRC	8/28/2011	179.2	177.2	177.9	178.9	182.4	186.2	192.9	207.1	196.3	180	154.1	134.7	7
2007-11LdRC	8/29/2011	209.5	210.5	213.4	214.4	209.5	206.6	212.4	225	211.5	190.8	161.7	140.7	1
2007-11LdRC	8/30/2011	212.2	214.3	215.5	214.4	208.2	204.7	211.1	222.7	210.2	189.3	160.3	139.9	2
2007-11LdRC	8/31/2011	209.6	208.6	211.1	210.3	209.5	207.3	210.8	223.9	211.2	190.5	161	140.9	3
2007-11LdRC	9/1/2011	206.4	210.9	210.2	209.2	206.5	205.3	207.1	220.7	207	186.2	157.8	136	4
2007-11LdRC	9/2/2011	205.3	209.9	211.2	210.9	208	201.1	200.7	212.5	196.3	184	160.7	140.9	5
2007-11LdRC	9/3/2011	193.9	195.7	196	196.3	195	194.6	199.1	204.6	194.7	180	157.2	138.4	6
2007-11LdRC	9/4/2011	182.3	191	185.8	185.7	186.3	183.9	195	206.4	192.9	178.8	157.1	138.9	7
2007-11LdRC	9/5/2011	193.3	194.3	194.2	193.9	196.4	198.8	202.9	217.9	204	182.9	156.3	136.9	1
2007-11LdRC	9/6/2011	203.3	208.8	206.1	205.5	204.6	199.2	206.5	218.3	202.4	181	153.5	133.5	2
2007-11LdRC	9/7/2011	201.3	202.6	205.8	206.2	204.6	199.7	203.6	216.5	207.7	179.6	153.8	134.1	3
2007-11LdRC	9/8/2011	202.4	204.3	207	208.3	205.8	199.4	204.6	217.4	203.6	183.5	154.8	133.7	4
2007-11LdRC	9/9/2011	204.3	204.9	206.7	210.2	207.4	201.3	206.4	211.8	197.4	183.1	158.1	142.2	5
2007-11LdRC	9/10/2011	196.5	196.7	197.7	197.5	199.1	197.1	199.2	204.9	193.2	179.3	158.4	139.8	6
2007-11LdRC	9/11/2011	182.5	183.6	185.4	185.9	189.3	189.3	197	209.9	195.6	177.6	153.3	134	7
2007-11LdRC	9/12/2011	207.9	206.1	204.3	202	199.4	197.1	205.2	214.9	199.2	180.2	153.1	135	1
2007-11LdRC	9/13/2011	206.8	205.8	209.9	208.6	205.5	202.7	212.2	222.4	207.1	187.5	157.8	136.9	2
2007-11LdRC	9/14/2011	199.1	202.6	206.7	204.5	200.8	198	204.5	215.9	203.3	172.2	156.3	135.1	3
2007-11LdRC	9/15/2011	200.1	198.8	197	197.5	195.3	192.5	206.8	213.1	201.1	176.7	153.1	134.1	4
2007-11LdRC	9/16/2011	201.7	202.9	199.4	198.1	193.5	189.6	200.8	201.6	188.6	173.2	154.2	135.8	5
2007-11LdRC	9/17/2011	182.6	184.2	183	184.4	186.5	188.4	191.5	198.1	185	166.6	148.6	135.9	6
2007-11LdRC	9/18/2011	174.1	175.2	175.6	176	179.2	181.7	191.8	198	183.6	167	146.5	129.6	7
2007-11LdRC	9/19/2011	193.6	196.3	196.4	196	195.6	192.6	204.5	212.1	196.4	175.5	148.9	130.9	1
2007-11LdRC	9/20/2011	196.4	199.7	200.1	201.7	199	194.7	205.2	212.7	195.3	167.4	149.5	131.6	2
2007-11LdRC	9/21/2011	197.1	194.4	197.4	198.5	197.3	196.3	206.4	210.2	192.9	173.3	150.2	132.4	3
2007-11LdRC	9/22/2011	194.6	196.3	196.3	197.3	196.8	193.3	206.2	211.5	199	179.7	153.9	135.4	4
2007-11LdRC	9/23/2011	206.7	205.8	203.7	201	197.7	193.9	203.3	204.6	191.2	176	155.3	137.3	5
2007-11LdRC	9/24/2011	195.4	193.7	195	197.8	199.8	200.4	209.9	211.2	198.5	183.4	156.3	137.5	6
2007-11LdRC	9/25/2011	188.2	190.4	191.2	189.9	192.3	194.6	206.4	211.9	196.4	179.8	152.3	134.1	7
2007-11LdRC	9/26/2011	197.7	198.8	200.4	198.7	196.7	195	206.8	212.1	196.3	175.7	150.9	131.4	1
2007-11LdRC	9/27/2011	193.2	192.8	193.3	191.6	191.6	189.2	201	205.1	189.4	172.2	145.7	128.6	2
2007-11LdRC	9/28/2011	195	194.9	196	194.2	192.6	191.4	201.6	203.3	189.7	173.3	148.7	129.7	3
2007-11LdRC	9/29/2011	193.6	195.8	193.3	189.7	184.7	185.5	192.8	198	191.8	170.2	148.6	131.5	4
2007-11LdRC	9/30/2011	190.1	193	198.8	196.4	194.9	186.7	198.2	191.4	181.1	165.8	146.4	131.2	5
2007-11LdRC	10/1/2011	191.9	193.1	189.2	190.5	189.5	190.1	200.2	200.5	185.9	169.1	149.1	134.9	6
2007-11LdRC	10/2/2011	186.3	186.9	184.7	187	188	188.2	203.8	204.9	189.6	171.4	148.4	131.5	7
2007-11LdRC	10/3/2011	201.9	204.1	201.5	198.2	194.7	197.3	213.2	214.5	198.7	175.9	149	129.3	1
2007-11LdRC	10/4/2011	196.5	201.5	201.5	199.8	193.1	191.6	211	214.7	196.4	174.3	149.5	131.8	2
2007-11LdRC	10/5/2011	197.6	202.7	195	201.2	200.4	199	214.7	216	198.1	177.8	151	132	3
2007-11LdRC	10/6/2011	200.7	200.8	197	198.7	197.1	199.6	209.9	208.6	197	182	153.8	139.5	4
2007-11LdRC	10/7/2011	200.5	200.2	204	205.1	203.2	198.2	209.6	205.7	188.9	173	150.6	132.1	5
2007-11LdRC	10/8/2011	183.1	184.3	186.1	187	191.1	193.7	206.7	204	185.7	166.7	148.3	132.9	6
2007-11LdRC	10/9/2011	177	178.2	179.5	181.4	186.4	191.3	197.6	198.1	192.2	184.1	147	129.4	7
2007-11LdRC	10/10/2011	199.8	201.2	203.7	203	200.5	202.9	214.5	211.7	199.8	178.7	149	130.7	1
2007-11LdRC	10/11/2011	203	206.5	207.2	206.8	204.1	203.4	220.9	215.3	199.3	177.7	150.6	130.7	2
2007-11LdRC	10/12/2011	198.4	197.1	198.4	198.2	198.2	197.9	216.5	213.7	194.7	175.9	148	130.1	3
2007-11LdRC	10/13/2011	195.6	197.6	197.6	198.7	197	196.8	215	211.4	194.1	175.2	149.1	129.9	4
2007-11LdRC	10/14/2011	195.9	198.4	200.7	202.4	200.4	193.4	206.8	201.2	185.4	169.7	149.6	131.6	5
2007-11LdRC	10/15/2011	179.8	181.6	183	184.7	188.5	188.2	202.6	196.7	182.4	166.1	147.4	131.5	6
2007-11LdRC	10/16/2011	176.5	183	191	193.2	195.2	200.4	218.8	213.5	195.8	175	151.5	132.6	7
2007-11LdRC	10/17/2011	210.4	212.5	214	214.3	209.6	203.8	225.2	224.6	202.9	178.8	151.8	132.4	1
2007-11LdRC	10/18/2011	200.8	200.2	199.3	198.2	199.6	202.6	219.4	215.2	196.1	174.2	148.3	129.1	2
2007-11LdRC	10/19/2011	205.3	201.2	200.2	199.3	199.9	200.4	225.3	220.5	201.5	179.5	152	131.8	3
2007-11LdRC	10/20/2011	208.9	212.4	215.7	216.7	212.4	201.8	220.7	226.9	210.6	181.6	153.4	135	4
2007-11LdRC	10/21/2011	204.6	207.5	209.6	209.3	206	203	216.2	206.8	191.7	175.5	153.4	135.1	5
2007-11LdRC	10/22/2011	186.9	187.7	188.6	188.6	191	194.6	209.1	194.1	184.3	168.2	149.3	130.4	6
2007-11LdRC	10/23/2011	169.1	166.6	166.6	169.9	175.5	186.3	205.7	198.5	182	163.9	141.7	125.2	7
2007-11LdRC	10/24/2011	197.4	199.4	199	198.1	194.3	197.1	221.6	215.7	196.1	173.8	146.6	127.5	1
2007-11LdRC	10/25/2011	195.3	197.9	200.4	203.8	203.4	201.3	222.1	211.9	196.7	175.7	147	127	2
2007-11LdRC	10/26/2011	195.9	201	206.5	206.4	204.6	200.7	221.4	214	195.3	174.2	147	128.3	3
2007-11LdRC	10/27/2011	193.1	191	198.5	200.4	199.8	199	220.7	212.9	194.1	174.4	150.5	130.7	4
2007-11LdRC	10/28/2011	196.4	198.8	196.2	198.8	192.2	206.4	200.4	194.1	179.6	167.9	149.8	137.6	5
2007-11LdRC	10/29/2011	175.4	174.7	182	176.1	178.8	197.1	204.9	184.9	170.5	161.3	145	133.9	6
2007-11LdRC	10/30/2011	175.2	176.3	176.6	178.2	185.6	202.6	216.5	197.9	177.6	169.1	148.1	136.7	7
2007-11LdRC	10/31/2011	205.4	211.5	208.9	211.7	208	203.7	198.5	189.3	178.2	169.1	152.2	139.3	1
2007-11LdRC	11/1/2011	197.9	197.9	197.6	197.2	195.8	199.2	218.8	210.4	193.7	173.9	149	136.2	2
2007-11LdRC	11/2/2011	193.7	195.5	195	197.1	196.5	197.1	215.9	207.8	193.1	174.4	149.8	130.2	3
2007-11LdRC	11/3/2011	191.3	193.5	193.3	191	191.1	193.9	213.7	205	190.8	173.2	150.5	129.8	4
2007-11LdRC	11/4/2011	190.7	192.4	193.8	194.7	192.6	192.6	207.7	198.6	186.1	171.4	152.5	133.8	5
2007-11LdRC	11/5/2011	178.9	177.5	177.3	178.6	180.9	187.3	201	191.6	178.4	165.9	149.3	132.1	6
2007-11LdRC	11/6/2011	175.6	175.8	175.3	175.8	177	183.5	201.7	195	182.5	166.7	146.7	127.1	7
2007-11LdRC	11/7/2011	189.8	190.4	190.7	190.9	190.4	192.7	213.7	206.6	191.6	173.3	149.8	131.2	1
2007-11LdRC	11/8/2011	193.2	193.5	191.1	192.1	193.2	199.1	217.3	208.2	192.8	174.7	150.8	129.7	2
2007-11LdRC	11/9/2011	190.4	189.8	191	191.6	190.7	193.3	211.5	204.4	187.9	172.5	149.7	130.7	3
2007-11LdRC	11/10/2011	187.5	187.9	188.8	189.3	188.6	191.3	207.3	198.7	185	171.1	148.3	128.9	4
2007-11LdRC	11/11/2011	182.6	181.2	181.8	185.1	187.8	191.1	205.8	195.7	184.9	170.8	149.4	130.5	5
2007-11LdRC	11/12/2011	175.1	179.8	177	180.6	184.5	189.2	203.3	194.7	183	167.5	136.8	129.9	6

SetID	Date	HR13	HR14	HR15	HR16	HR17	HR18	HR19	HR20	HR21	HR22	HR23	HR24	DOW
2007-11LdRC	11/13/2011	174.4	176.1	176.6	177.3	180.6	190.3	205	195.4	181.3	161.4	140.8	126.1	7
2007-11LdRC	11/14/2011	188.1	188.8	190.4	190.3	190.1	200.5	207.6	204.8	195.2	178.9	153.1	127	1
2007-11LdRC	11/15/2011	196.6	195.4	195.5	192.8	191.6	193.2	213.1	206.1	189.8	172.8	148.9	128.4	2
2007-11LdRC	11/16/2011	186.2	184.2	188.6	190.2	188	192	211.9	203.7	187.5	173.7	146.7	127.9	3
2007-11LdRC	11/17/2011	187	186.7	189.7	188.1	187.2	191.6	209.5	198.6	186.4	172.5	148.6	125.2	4
2007-11LdRC	11/18/2011	183.6	182.5	183.8	184.7	183.1	188.5	201.3	193.5	185.4	171.2	150.4	131	5
2007-11LdRC	11/19/2011	179.1	173.6	178.5	183.5	184.1	190.8	197.2	194.6	183.6	170.1	149.2	137.7	6
2007-11LdRC	11/20/2011	176.4	175.7	178.2	182.6	184.8	190.8	209.5	202.8	185.3	168.4	146.6	128.9	7
2007-11LdRC	11/21/2011	197.4	194.3	195.5	194.3	196.6	201.8	222.6	215.9	200.7	181.1	155.2	134.9	1
2007-11LdRC	11/22/2011	199.2	198.9	200.5	198.2	198.1	206.2	225.9	217.2	189.9	186.2	158.9	138.1	2
2007-11LdRC	11/23/2011	196.1	194.8	193.2	186.2	197.9	209	218.5	208.4	195.4	189.7	158.7	136.9	3
2007-11LdRC	11/24/2011	192.7	192.5	189.5	190.1	186.7	183.9	186.4	180.6	171.2	160.5	146.2	128.7	4
2007-11LdRC	11/25/2011	188.1	188.4	190.7	192	190.2	204.1	208	191.7	175.8	163.8	145.8	134.3	5
2007-11LdRC	11/26/2011	180.5	179.9	178.3	183.8	184.1	204.4	204.2	188.7	179.5	165.4	147.7	137.7	6
2007-11LdRC	11/27/2011	169.5	167.7	165.9	167.9	172.3	197	201.5	186.7	168.2	156.6	142.3	129.3	7
2007-11LdRC	11/28/2011	185.9	189.2	186.4	184.5	195.9	192	211.8	203.7	188.8	167.1	145.5	132.5	1
2007-11LdRC	11/29/2011	190.3	191.6	183.9	187.3	186.4	192.8	210.8	205.2	187	168.8	143.4	124.8	2
2007-11LdRC	11/30/2011	186.4	189.5	192.4	192.8	191.5	197.4	215	207.6	190.4	167.2	147.5	128.7	3
2007-11LdRC	12/1/2011	188.2	186.3	188.6	189.1	188.4	194	216.1	208.8	190	170	143.8	124.8	4
2007-11LdRC	12/2/2011	183.9	186.6	188.8	190.5	189.1	192.9	210.2	200.3	183.5	170	148.3	126.4	5
2007-11LdRC	12/3/2011	171.9	174.2	174.5	175.2	176.4	183.8	200	191.7	178.4	164.6	143.7	127	6
2007-11LdRC	12/4/2011	165.3	162.8	163.5	166.1	170.7	185.7	206.7	200.3	173.8	155	138	118.4	7
2007-11LdRC	12/5/2011	181.8	183.4	182.4	180.5	179.1	186.7	211.3	201.9	185.6	166.3	143	121	1
2007-11LdRC	12/6/2011	178.3	178.1	178	177.5	176.8	181.4	202.7	196.5	180.1	162.9	139.7	122.9	2
2007-11LdRC	12/7/2011	170.2	173.7	173.7	171.4	172.9	184.3	198.1	197.2	181.2	162.4	141.7	123.3	3
2007-11LdRC	12/8/2011	177.1	180.7	180.4	180.8	180.5	186.6	203.2	202.7	186.4	168.1	143.3	125.8	4
2007-11LdRC	12/9/2011	179.2	178.1	179.6	180.8	181.4	186.4	203.7	192.5	177.5	163.3	145.4	126.6	5
2007-11LdRC	12/10/2011	166.3	164.1	164.9	166.1	169.8	177.2	194.3	184.6	175.4	160	142	124.5	6
2007-11LdRC	12/11/2011	160.5	159.8	160.8	163.6	167.5	178.4	202.2	197.2	181.1	159.9	138.2	120.8	7
2007-11LdRC	12/12/2011	174.2	174.7	175.8	175.9	176.7	181.9	207.5	201.8	183.4	162.7	139.2	123.9	1
2007-11LdRC	12/13/2011	173	171.1	164.1	170.7	171.8	175.8	201.3	191	180.7	158	137.9	120.5	2
2007-11LdRC	12/14/2011	170.1	171.9	174.7	174.2	173.9	180.3	201.6	195.6	181	163	140.3	121.3	3
2007-11LdRC	12/15/2011	170.2	170.1	171.6	173.2	173.8	180	202.7	195.8	182.2	166.5	141.5	122.6	4
2007-11LdRC	12/16/2011	171.9	172.5	172.5	172.5	173.6	178.9	186	184.8	176.8	158.6	134.1	123.2	5
2007-11LdRC	12/17/2011	163.4	159.4	160.5	162	165.6	172.9	192.5	186.4	172.1	159.7	139.2	124	6
2007-11LdRC	12/18/2011	155.2	154.6	157.4	158.7	164.7	178.3	203.1	200.9	189.1	172.3	147.6	127.8	7
2007-11LdRC	12/19/2011	177.9	178.7	180.7	180.3	179.5	193	202.8	200.4	191.6	177	145.9	122.7	1
2007-11LdRC	12/20/2011	181.1	181.1	183.3	183.5	186.3	193.6	220.1	212.2	195.8	179.1	148.7	127.2	2
2007-11LdRC	12/21/2011	183.7	183.7	186.6	187.7	188.6	195.8	219.3	212.4	195.8	178.5	149.4	128.9	3
2007-11LdRC	12/22/2011	184.3	186.7	185.3	183.5	185.4	194.9	218.2	211.6	195.2	178	155.2	126.5	4
2007-11LdRC	12/23/2011	177.6	177.4	177.2	176.6	176	184.5	204.1	198.8	184.3	170.7	148	128.8	5
2007-11LdRC	12/24/2011	166	166.5	165.7	169.8	176.8	182.7	197.8	183.4	169.1	160.4	144.3	128.7	6
2007-11LdRC	12/25/2011	150	149.5	152	155.2	159.2	167.7	182	178.1	167	156	139	123.3	7
2007-11LdRC	12/26/2011	168.6	167	168.1	170.7	175.2	186.4	214.2	213.6	195.6	174.9	148.6	128.5	1
2007-11LdRC	12/27/2011	185.6	183.9	182.7	182.8	186.1	194	224.6	222	199.5	177.4	151.9	130.8	2
2007-11LdRC	12/28/2011	189.6	190.2	187.8	191.9	199.1	211	226	216.1	196	180.4	156.8	137.9	3
2007-11LdRC	12/29/2011	187.8	189.5	193.5	197.2	197.6	210.7	226.7	215.7	192.3	178.9	157.8	141.2	4
2007-11LdRC	12/30/2011	192.2	198.4	194.3	196.8	200.4	213.6	222.3	213	193.2	169	147	129.5	5
2007-11LdRC	12/31/2011	178.9	180.7	179.2	182.2	191.5	208.5	217.2	192.7	172.3	158.2	145.4	133.5	6

SetID	Date	HR13	HR14	HR15	HR16	HR17	HR18	HR19	HR20	HR21	HR22	HR23	HR24	DOW
Based on Hour Ending		13	14	15	16	17	18	19	20	21	22	23	24	
Total MW by Hour		67,966	68,180	68,378	68,703	68,946	69,652	73,009	74,168	69,864	63,384	54,443	47,300	
Total Obs by Hour		365	365	365	365	365	365	365	365	365	365	365	365	
Off Peak Hrs MW											63,384	54,443	47,300	
Total Off Peak Obs by Hour											365	365	365	
Mid Peak Hrs MW		67,966	68,180	68,378	68,703	68,946	19,420	20,308	20,568	19,422				
Mid Peak Obs by Hour		365	365	365	365	365	105	105	105	105				
Priority Peak Hrs MW							50,233	52,701	53,600	50,442				
Priority Peak Obs by Hour							260	260	260	260				
Total MW Check		0.00	0.00	0.00	0.00	0.00	0.00	0.00	0.00	0.00	0.00	0.00	0.00	
Total Obs Check		0	0	0	0	0	0	0	0	0	0	0	0	

Total Avg. MW
Off Peak Avg. MW
Mid Peak Avg. MW
Priority Peak Avg. MW

Maui Electric Light Company, Inc. - Maui Division
MARGINAL RUNNING COSTS 2007-2011

Year	Priority Pk	Shoulder Pk	Off-Peak	Annual
	(¢/KWH)			
	(1)	(2)	(3)	(4)
2007	14.52549	14.51027	13.84598	14.23529
2008	10.72767	10.57084	10.10891	10.39708
2009	10.53799	10.32905	9.92950	10.18747
2010	10.45893	10.13055	9.73680	10.00562
2011	10.29782	10.15406	9.80882	10.02728

NOTE: Costing periods are defined as follows:

Priority Peak: 5:01 p.m. to 9:00 p.m., weekdays.
Shoulder Peak: 7:01 a.m. to 5:00 p.m., weekdays,
7:01 a.m. to 9:00 p.m., weekends.
Off-Peak: 9:01 p.m. to 7:00 a.m., daily.

[1]: GNPIPD Forecast. Year 2000 = 100.

Source : Col. (1)-(4): Based on production simulation data for 2007-2011. (See attachments)

2007 Running Cost
Is this a leap year? n

Month	Day	Year	1	2	3	4	5	6	7	8	9	10	11	12
1	1	2007	137.6	134.6	133.6	138.4	143.1	135	142.3	134.4	134.3	152.9	139.4	139.4
1	2	2007	134	140.2	119.4	121.8	140.6	144.4	135.9	154.7	151.7	149.2	144.8	144.1
1	3	2007	135.4	140.1	128.8	124	138.4	136.9	137.6	147.5	153.2	150.6	144.6	145.1
1	4	2007	142.9	139.4	127.6	131.2	138.5	134.1	134.1	156.1	148.8	141.5	137.6	138.1
1	5	2007	143.7	138.5	135.4	133.6	139.2	134.6	157.4	153.5	147	143.1	141.1	141.1
1	6	2007	137.6	134.8	133.6	138.4	143.1	135	142.3	134.6	134.3	152.9	139.4	139.4
1	7	2007	136.9	135.4	139.9	140.7	135.6	141.2	141.9	139.9	150.6	148.4	136.6	139.6
1	8	2007	135	140.5	128.7	133.6	138.2	135.2	139	153.2	145.3	137.9	141	143.5
1	9	2007	133.9	140.3	119.2	121.6	140.7	144.4	135.7	154.7	151.8	149.3	144.8	144.2
1	10	2007	135.3	140.1	128.7	123.9	138.4	136.9	137.5	147.5	153.3	150.7	144.7	145.1
1	11	2007	142.9	139.4	127.5	131.2	138.6	134.1	133.9	156.2	148.9	141.5	137.6	138.2
1	12	2007	143.7	138.6	135.4	133.6	139.3	134.5	157.5	153.6	147.1	143.2	141.1	141.1
1	13	2007	141.3	137.5	133	126.9	140.2	144.2	139.3	137.3	149.3	144.8	151.5	153
1	14	2007	140.4	135.8	138.2	139.4	136.7	143.6	136.5	137.2	134	151.9	152.6	151.8
1	15	2007	137	142.6	142.7	133.7	140.4	133.9	145.5	141.1	135.4	154.6	151.6	156.6
1	16	2007	135.5	141.7	142.7	143.8	139.8	136.4	145.5	143.8	138	158.4	155.5	155.5
1	17	2007	139.2	141.6	134.9	134.6	142.5	152.7	148.4	146.6	145.6	134.5	157.5	143.4
1	18	2007	137	143.1	133.8	139.3	141.1	134.1	152.7	137.9	135.2	152.8	159.1	151.9
1	19	2007	157.6	138.1	140	138.7	133.4	153.8	148.8	141.9	135.2	157.1	158.8	151.3
1	20	2007	136	143	144	137.3	141	157.4	148	142.3	135.8	156.8	159.1	153.7
1	21	2007	133.4	141.7	144.1	144.1	143.3	135.7	147.4	143.4	141.9	133.5	158.6	156.7
1	22	2007	142.9	136.4	144.3	143.8	138.2	137.7	156.4	154.6	144.9	137.8	135.2	136.9
1	23	2007	135.2	142.5	133.9	134.1	142.4	138.4	155.7	149.7	145.3	142.4	141.3	143.6
1	24	2007	144.7	139.7	132.5	132.5	136.7	143.9	137.4	147.9	142.2	146.9	145.4	145
1	25	2007	133.8	136.7	140.1	139.5	135.6	143.1	134.6	155.2	150.5	146.1	146.9	145.1
1	26	2007	143.6	136.1	139.6	139.5	135.2	141.7	151	147.7	148.1	143.2	137.5	140.4
1	27	2007	144.7	140.3	124.7	122.3	140.5	134.2	134.9	142.8	154.5	148.7	146.3	146.2
1	28	2007	135.7	134.9	122.3	119.7	130.7	135	135	134.6	149.8	151.5	144.3	142.5
1	29	2007	144.4	140.5	133.6	137	137.4	133.6	152.8	150.8	142.2	136.5	141.5	142.1
1	30	2007	142.7	136.9	139.9	139	137.8	142.6	137.3	151.1	142.2	146.2	139	143.4
1	31	2007	141.6	139.4	134.8	128.2	138.5	135.8	153.6	152.3	144	138.2	142.2	142.2
2	1	2007	135	132.8	118.8	118.6	130.4	140.6	134.5	156.7	147.5	148.2	143.6	149.1
2	2	2007	139.4	141.1	134.7	135.2	134.6	157.4	149.5	147.1	138.6	150	159.3	158.7
2	3	2007	135.7	132.8	118.5	117	118.6	139.1	138.1	135.2	134.4	151.2	145	142.3
2	4	2007	137.6	124.4	115.1	115.2	115.2	137.5	154.2	155.2	143	143.4	148.5	142
2	5	2007	138.2	124.4	114.9	118.5	124.4	142.9	135.8	137	151.1	147.7	141.2	137.8
2	6	2007	134.9	139.3	118.4	118.6	124.4	133.6	139.3	134.3	153.2	143.1	150.4	150.3
2	7	2007	130.4	118.6	114.2	112.9	118.4	134.5	139.9	135.8	156.2	144.2	151.1	151.1
2	8	2007	129.8	114.9	110.8	112.1	116.3	134.7	141.9	138.3	147.8	147.2	142.3	143.4
2	9	2007	126.8	118	114.4	113.9	115.7	135.4	140.5	135.2	154.5	152	147.9	147.5
2	10	2007	139.6	122.6	115	114.9	118.4	140.5	137.5	136.6	153.2	146.1	141.9	150.7
2	11	2007	136.9	127.4	118.4	115	115.4	135.2	134.5	143.6	152.9	151.7	144.4	148.1
2	12	2007	137.1	131.3	118.9	118.8	121.1	144.3	138.4	139.5	146.7	141.3	140.5	140.9
2	13	2007	134.7	140.4	128.3	121.6	129.5	143.5	140	156.5	145.4	145.9	139.6	143.1
2	14	2007	137	139.3	123.6	119.7	124.8	144.2	137.3	155.7	152.8	150.2	145.3	138
2	15	2007	140.5	133	121.6	120.7	129.5	144.2	139.5	146.5	149.2	144	139.2	141.1
2	16	2007	137.5	131.8	118.9	117.8	118.9	134.1	142.1	137.7	153.2	151.2	148.4	143.2
2	17	2007	138.5	124.2	115.4	115.2	115.8	132.4	143.3	138.9	156.5	154.5	150	150.4
2	18	2007	138.9	119.7	115.9	112.9	114.9	123.6	134.5	143.4	156.5	152.8	147.7	147.7
2	19	2007	123.6	115	111.8	113.2	115	138	133.6	142.3	148.5	147.3	143.2	144
2	20	2007	127.9	115	111.3	110.5	115	136.4	135	138.4	155.3	152.7	152.7	143.6
2	21	2007	138.6	118.3	113.7	113.2	114.9	137.3	144.4	153.8	148.4	145.9	141.9	150.2
2	22	2007	140.1	120.1	114.8	112.9	114.7	136.2	139.6	153.1	156.1	144.3	148.4	146.4
2	23	2007	140.7	123.6	117.3	114.7	118	135.3	142.1	137.8	155.7	142.7	149	147.5
2	24	2007	137	130.9	118.3	114.8	114.8	133.4	141.7	135.5	139.2	154.3	150.2	151.7
2	25	2007	137.5	118.3	115.3	113.2	114.7	125.4	134.8	140.3	143.6	154.6	149.1	148.5
2	26	2007	139.3	118.5	113.9	111.8	113.6	137.5	137.9	137.7	136.5	153.3	147.6	149.3
2	27	2007	134.6	118.1	114.4	111.5	115	137.3	134.5	143.7	149.2	144.9	151.4	150.6
2	28	2007	138.6	122.1	115	115.2	118.6	134.6	142.7	153.2	154.8	149.8	143.6	144.5
NA	NA	NA												
3	1	2007	138.2	125.6	117	114.9	119.9	142.4	134.7	137.8	151.2	152.7	143.7	144.5
3	2	2007	136.7	143.2	135.6	136.5	133.8	156.1	149.3	149.2	137.6	144	137.3	134.8
3	3	2007	137	142.8	135.6	138.1	135.7	140.5	135.7	150.1	144.7	138.6	134.6	135.5
3	4	2007	137	143.1	136	137.7	134.9	139.9	155.2	154.4	152	136.6	138.9	138.1
3	5	2007	133.4	121.4	114.8	115.3	118.1	134	136	138.5	148.9	145	150.9	151.8

2007 Running Cost
Is this a leap year? n

Month	Day	Year	1	2	3	4	5	6	7	8	9	10	11	12
3	6	2007	132.7	114.8	76.9	0	21.8	135.1	134.7	135.7	149	145.2	144	153.1
3	7	2007	138.8	115.3	0	0	114.7	134.5	138.4	154.9	147.3	143.7	143	143.9
3	8	2007	140.7	114.9	111.8	0	113.7	143.9	140	137.2	156.5	146.5	151.8	150
3	9	2007	135.9	118.8	76.9	10.9	112.1	134.4	138.2	137.9	156.4	143.7	151.9	150.4
3	10	2007	136	123.6	114.9	112.1	115	136.9	138.9	142.3	151.4	146.3	142.4	143.6
3	11	2007	134.2	134	117.8	112.1	114.7	140.4	142.8	142	136.8	157.5	153.2	153.1
3	12	2007	139.2	118.8	113.2	0	116.7	143.1	134.8	155.9	148.4	145.9	142.6	142.2
3	13	2007	143.7	139.9	121.4	118	129.7	137.1	154.7	149.1	149.6	142.7	136.7	136.8
3	14	2007	133.8	143.4	138.5	140.4	138.4	143.4	133.9	156.4	151.1	142.3	140	140.2
3	15	2007	137.5	119.4	112.6	88	118.1	143.5	134.3	156.3	153.9	142.9	144.1	146.5
3	16	2007	122.4	99.1	0	0	65.8	135.8	138.2	137.1	146.7	150	145.9	146.3
3	17	2007	140.1	114.8	112.9	0	112.1	134.6	140.9	135.4	134	153.1	148.4	147.7
3	18	2007	118.2	76.9	0	0	0	118.1	137.4	136.6	156.8	156.7	154.5	154.7
3	19	2007	134.8	143.8	132.8	126.1	143.3	137.3	153.9	143.6	139	138.8	139.6	144.5
3	20	2007	136.6	143	132.8	129.8	141.8	135.8	151.9	150.9	136.8	139.2	136.8	140.3
3	21	2007	140.3	143.8	121.5	118.8	144.4	139.9	145	144.9	145.2	140.4	140.6	142.6
3	22	2007	136	140.8	132.8	133.4	142.4	135.8	154.8	142.7	141.1	140.4	135.8	140.1
3	23	2007	140.2	139.2	144.3	135.2	140.7	137.3	155.4	144.4	137.1	139.9	137.1	138.9
3	24	2007	140.1	134.5	140.3	141.7	140.2	142.3	153.5	147.9	144.2	140.3	139.8	140.3
3	25	2007	139.4	136.2	141	141.8	138.4	142.5	153.9	150.6	148.1	140.8	136.9	138.5
3	26	2007	135.9	118.2	0	0	114.7	134.4	134	155.9	152.2	151	146.7	147.8
3	27	2007	135.9	126.1	115.3	110.5	114.8	144.4	139.5	153.9	149.9	146.2	141.1	142.9
3	28	2007	143.4	140.2	118.3	117.3	130.3	142.4	144	153.3	148.1	144.8	138.6	136.8
3	29	2007	135.8	135.5	138.9	134.6	140.2	137	141.3	136	145.1	142.7	141.2	141.8
3	30	2007	137.1	137.1	137.5	123.6	115.5	141.5	144.6	153.7	147.7	141.4	139.9	140.3
3	31	2007	141.6	137.4	134	125.4	135.9	134.8	137.8	144.1	156.7	149.1	146.7	148
4	1	2007	112.1	0	0	0	0	112.4	135.2	140.7	138.1	153.8	134	135.9
4	2	2007	142	137.3	116.6	140.7	140	141.9	139.3	152.2	152.8	151.5	148.4	147
4	3	2007	133.8	139.6	112.1	120.2	138.2	137.5	149.4	156.7	146.2	142.9	140.8	143.3
4	4	2007	144.5	140.1	118.7	116.9	137.6	137.4	136.8	154.7	144	144.1	142.5	138.1
4	5	2007	135.1	140.2	118.2	116.3	137.9	137.1	155.2	156.2	146.2	147.1	141.5	144
4	6	2007	134.3	139.1	124.8	129.6	138.4	137.5	138.7	154.5	147	148.9	146.6	148.1
4	7	2007	137.7	141	124.8	122.2	136.9	141.1	136.7	133.8	151.6	147	148	149.5
4	8	2007	136.8	141	119	118.7	139.7	134.2	137.4	141.5	157.3	147.1	156.9	156.6
4	9	2007	142.2	136.1	136.7	136.4	136.9	140.7	138.6	152	155.1	141.9	151.6	140.9
4	10	2007	137.3	140.6	119.5	122.6	138.8	143.1	144.4	151.8	149	145.4	150.1	148.8
4	11	2007	139.1	140	118.7	129.8	135.4	141.1	144.8	155.8	144.5	148.8	149.7	150.1
4	12	2007	135.9	137.5	140	140.3	134.2	138.9	140.4	151.7	154.1	146.3	150.1	148.8
4	13	2007	135.4	137.3	139	141	135.2	142.3	142.6	149.2	149.7	142.9	138	139.9
4	14	2007	140.5	136.3	137.5	137.8	136.5	142.1	143.5	157.2	147.4	146.8	146.5	145.4
4	15	2007	143.1	138.1	140.9	140.9	137.4	134.5	136.3	135.7	155.9	148.4	152.6	152
4	16	2007	136.2	142.9	143.6	140.9	134.7	138.4	154.8	153.5	151.3	141	137.7	136.3
4	17	2007	143.6	136	140.9	139.4	134.6	142.8	137.1	146.4	150.3	139.6	140.3	139.3
4	18	2007	144.1	136.6	140.1	139.8	135.1	135.1	134.1	156.9	149.4	147	141.5	139
4	19	2007	144	136.6	140.6	140.3	137.2	137.1	133.9	141.3	149.4	144.1	137.2	136.7
4	20	2007	141.4	133.9	138.6	139	134.7	136.3	143.2	155.7	147.8	145.1	140.4	140.1
4	21	2007	138.5	133.6	139	140.1	137.2	144.4	141	135.5	152	146.2	150.4	150.6
4	22	2007	139.7	134.4	138.8	139.8	137.1	143.6	142.9	143.2	147.7	155.7	149.8	147.6
4	23	2007	134.7	137.7	144.1	143.6	138.4	135	135.6	157.3	149.7	147.8	141.6	138.9
4	24	2007	137.6	138.4	140.6	139.5	144.5	138.5	139.2	153.3	147.7	151.9	144.1	142.5
4	25	2007	136.2	139.1	139	140.3	134.5	138.8	137.1	133.9	152.7	142.1	146.9	144.6
4	26	2007	133.7	138.9	140.8	139	137.8	139.1	137.1	153.1	155.6	142.6	148	145.7
4	27	2007	144.1	136.7	140	140.3	137.1	139.5	138.3	152.2	154.4	147.8	149.3	147.5
4	28	2007	143	138.4	139	139.5	138.8	134	142.9	135.8	138.4	157	151.2	151.1
4	29	2007	140.7	138.4	134.3	129.7	140	134.9	137.6	140.1	139.5	157.6	148.8	146.7
4	30	2007	135.2	118.4	113.4	115.1	115	140.1	138.3	139.9	142.3	142	137.7	135
5	1	2007	119.9	112.7	55.4	12	115.4	138.2	140.6	138	143	139.5	140.3	138.6
5	2	2007	118.2	115.2	112.7	111.7	115	138.1	139.6	136.5	143.4	139.5	151.5	147.9
5	3	2007	140	118.8	115	111.1	115.7	138	141	134.7	138.5	139.5	138.4	138.8
5	4	2007	131.6	115.7	114.1	77.3	114.9	138.2	137.4	134.5	135.4	136.4	134.3	135
5	5	2007	140.3	119	114.6	111.4	115.2	128.6	137.8	142.8	143	138.8	133.9	144.4
5	6	2007	138.4	127.4	118.3	114.9	115.7	130.4	134.8	134.9	136.9	134.3	140.2	137.8
5	7	2007	140.3	121.2	118	115.2	118.5	135.6	136.9	141	134.3	134.9	145.4	150
5	8	2007	137.3	130.4	119.1	118.5	125.6	143.4	144.4	143.9	139.2	157.3	148.9	149.6
5	9	2007	135.6	140.1	126.8	121.6	138.2	142.1	143	142.5	141.5	150.5	145.8	151.7

2007 Running Cost
Is this a leap year? n

Month	Day	Year	1	2	3	4	5	6	7	8	9	10	11	12
5	10	2007	134.9	140.1	133.4	127.4	140.4	141.9	143	140.2	140	142.4	155	152.4
5	11	2007	144.5	138.6	138.8	131.6	140.4	140.9	142.6	136.6	137.4	155.9	151.1	160.3
5	12	2007	143.8	137.4	140.1	132.8	138.8	135.1	135.2	143.8	143.2	140	142	137.1
5	13	2007	133.6	140.7	128	119.4	132.8	138.2	143.1	141.9	144	141	135	143.9
5	14	2007	135.2	139.3	132.7	128.5	136.7	141.7	142.6	138.9	140.3	144	157.8	154.3
5	15	2007	137.1	132.1	118.3	118	131.5	142.8	141.8	140.2	140.5	148	149.5	148.9
5	16	2007	138.4	132.7	121.9	118.3	122.4	141.1	140.2	142	143	133.8	150.2	156.8
5	17	2007	134.1	139.5	130.9	124.2	133.4	143	142.2	136.3	137.4	149.2	149.5	150.2
5	18	2007	135.2	138.9	137.5	132.7	139.3	140.5	141.3	140.2	142.1	146.9	149.5	149.7
5	19	2007	138.8	139.3	115	129.7	138.5	143.8	134.5	139.2	135.2	144.3	136.7	134.6
5	20	2007	137.1	138.9	135.2	128.5	139.3	133.8	140.8	141.2	133.5	143	142.4	139.9
5	21	2007	136.8	139.3	133.4	130.4	135.6	140.2	139.9	137.9	139.9	139.4	154.3	160.4
5	22	2007	134.6	140.4	134	127.4	140.4	141.4	141	137.7	139	153.2	159.9	155
5	23	2007	141.1	138.7	140.1	131.6	139.7	140.2	138.1	135.8	140.4	156.1	152.4	160.2
5	24	2007	144	136.1	139.3	140.7	138.6	140.5	139.2	134.9	138.1	145.7	149.3	150.4
5	25	2007	137.6	138.7	128.6	118.5	129.8	142.5	139.6	136.3	140	145.7	159.9	150.6
5	26	2007	136.7	138.2	140.1	129.8	133.4	134.9	136.8	141.5	136.4	137.8	137.8	135.5
5	27	2007	144.2	137.8	138.1	125	134.6	137.7	140.6	141.8	136.3	144.4	134.6	138.2
5	28	2007	135.6	139.5	134	124.3	132.8	138.2	138.6	141.2	133.9	142.4	143.3	136.9
5	29	2007	142.3	137.8	140.4	140.4	139.6	137.8	138.8	143.5	135.4	148.3	156.7	156.8
5	30	2007	141.2	138.8	140.1	131.6	139.7	140.2	138.1	135.7	140.7	156.2	152.3	160.4
5	31	2007	134.1	139.9	138.2	128.6	139.3	141.4	139.9	135.7	133.8	159	159.4	156.4
6	1	2007	135.2	133.4	119.9	120.3	120.3	143.4	139.1	134.3	133.7	136.7	157	158.3
6	2	2007	143.4	135.2	118.5	114.9	118.5	136.2	133.7	142.4	134.4	139.2	134.1	144.4
6	3	2007	139	139.9	120.7	114.9	118.4	131.6	144.5	143.7	134.1	142.5	141.3	136.8
6	4	2007	135.6	144.5	136.3	137.7	135.2	141.4	153.2	151.2	142.3	139	139.1	138.8
6	5	2007	136.1	140.3	140.4	135.9	144.7	156.2	150	148	135.8	153.3	154.7	157.6
6	6	2007	155.1	137.2	141	142	140.3	138	150	141.6	153.5	135.1	154.6	154.3
6	7	2007	155.7	137.4	141.4	143.5	140.3	138.4	151.8	144	147.9	158.7	155.3	155.6
6	8	2007	155.7	137.9	141	142	138.8	135.1	147.7	140.5	139.3	134.1	159.8	160.6
6	9	2007	135.6	134	139.4	140.7	140.1	134.1	139.8	150.4	145	136.9	148.8	151
6	10	2007	154.3	135.8	141.2	143.2	142.5	135.2	136.9	147.8	147.7	142.6	134	137.1
6	11	2007	157.6	139.1	142	144.1	140.9	152.8	152.6	144.1	134	133.6	156.3	153.2
6	12	2007	157.3	139.5	143.5	143.1	140	153.4	153.8	141.6	136.3	133.8	155	159.6
6	13	2007	146.5	140.4	142.4	140	142.2	156.2	148.7	149.2	137.1	157	154.3	159.1
6	14	2007	157.1	137.6	142.6	143.7	144.5	156.5	157.3	147.1	134.2	134.5	156.3	158.1
6	15	2007	156.1	138	142.6	143.3	141.6	156.7	153.1	143.3	142.3	134.4	142.4	144.6
6	16	2007	154.2	137.6	141.7	143.5	142.2	133.8	135.9	156.4	142.2	135.1	135.5	134.7
6	17	2007	141.7	140.4	144.5	137.8	143.8	136.7	152.8	148	150.6	137.4	138.8	136.2
6	18	2007	144.2	139.1	143.5	133.9	143.1	155.7	140.2	147.4	137	139.4	154.9	160.5
6	19	2007	154.1	136.6	141.3	143.1	139.8	136.2	157	145.6	134.3	152.1	158	152.5
6	20	2007	155.5	137.2	140.3	141.7	139	152.8	155.7	146.9	135.4	150.9	156.9	156.8
6	21	2007	153.6	136.2	141.7	143.6	141	154.1	147.4	149.7	138.7	134.9	153.1	158.1
6	22	2007	153.2	135.6	139.5	141	138.8	137	154.1	144.3	159.2	134.7	154.3	151.5
6	23	2007	153.5	136.2	140.2	142.3	141	156.5	134.1	153.8	140.5	137	134.6	156.8
6	24	2007	154.1	136.7	141.8	143.1	143.1	134.8	139.9	156.7	143.5	143.2	139.9	135.9
6	25	2007	157.1	140.4	142.4	144.4	139.3	138.1	152	150	136.4	135	154.1	158.5
6	26	2007	157.6	139.3	143	144.5	142.3	155.4	148.2	146.1	158.4	134.9	152.2	159.9
6	27	2007	134.2	140.4	143.9	133.8	142.2	156	149.9	145.1	155.5	159.6	158.6	155.8
6	28	2007	157.1	138.6	142.6	144.2	140.6	152.9	154.1	146.4	135.5	134.9	157.7	160
6	29	2007	157.6	137.5	143	143.3	140.5	153.8	156.6	146.8	139	156.7	153.2	154.3
6	30	2007	153.2	135.4	140.9	143	142.2	133.8	157.6	151.4	137.8	133.8	153	135.5
7	1	2007	157.6	138.7	142.7	143.9	142.7	137.3	153.9	153.9	143.7	137.7	140.6	139.4
7	2	2007	135.1	139.5	142.7	143.4	140.2	146.5	150	142.4	139.1	133.7	151.6	152.7
7	3	2007	134.3	140.1	134.3	143.4	141.7	153.8	152.1	152.7	137.2	149	154.8	156.5
7	4	2007	157.6	138.4	157.6	143	142.2	138.6	148.9	153.9	146.5	140.7	133.9	136.3
7	5	2007	156.9	138.3	156.9	142.2	139.8	155.1	145.1	149.7	150.5	160.4	160.3	159.1
7	6	2007	148.9	137.8	148.9	141.2	138.9	139.2	151.3	143	139	152.3	159.4	156.6
7	7	2007	155.8	136.9	155.8	141.5	141.1	135.1	153.2	151.3	148.9	144.2	136.8	133.5
7	8	2007	153.8	136.9	153.8	143	141.6	137.5	155.6	155.7	144.5	138.7	141	140.1
7	9	2007	141.1	138.9	141.1	129.7	133.4	139.1	136.7	140.9	134.6	154.3	152.6	143.4
7	10	2007	144.5	137.1	144.5	139.5	138.5	143.4	139.4	153.4	149.1	136.8	141	136.7
7	11	2007	142.3	135.9	142.3	140.4	138.6	142	136.2	152.6	146.8	137.4	144.6	140.2
7	12	2007	142	136	142	139.3	136.4	140.5	137.1	153	150.8	143.1	144.7	141.7
7	13	2007	143.4	136.3	143.4	139.9	137.5	142.7	139.1	144.2	140	158.5	154.9	151.8

2007 Running Cost
Is this a leap year? n

Month	Day	Year	1	2	3	4	5	6	7	8	9	10	11	12
7	14	2007	140.8	134.7	140.8	138.4	137.4	136.7	138.2	143.9	141.9	133.5	144.7	149.6
7	15	2007	143.3	136.6	143.3	140.4	140.3	136.9	143.5	140.3	144	138.3	138.6	135.6
7	16	2007	138.9	138.8	138.9	138.2	139.5	143.8	140	155.9	155.6	146.9	142.3	138
7	17	2007	143.5	136.4	143.5	139.5	138	142.3	139.3	155.1	154.1	145.1	140	138.9
7	18	2007	143.3	136	143.3	139.3	138	142.2	139.1	156.7	155.6	146.9	137.4	140.5
7	19	2007	144.1	136.4	144.1	140.2	137.8	142.2	136.4	156.6	155.2	146.5	142.8	137.6
7	20	2007	142	135.1	142	138.6	136.6	138.4	137.9	156.6	154.7	147	137.4	139.5
7	21	2007	142.8	135.8	142.8	140.6	139.1	134.5	138.1	135	154.8	146.4	146.9	144.7
7	22	2007	143.1	136.7	143.1	140.6	139.5	135.3	143	140.4	152.9	156	147.7	145.7
7	23	2007	144.1	137.8	144.1	140.3	138	137.1	139.1	155.3	148.4	137.3	141	138.3
7	24	2007	141	135.1	141	139.3	136.9	141.2	138.7	155.5	150.2	139	139.2	136.7
7	25	2007	143.2	136.4	143.2	140.3	137.5	141.9	139.3	157.3	154.6	149.2	142.4	146.6
7	26	2007	144.6	137.5	144.6	139.3	138.8	143.2	139.1	134	148.7	150.1	142.5	140.8
7	27	2007	143.5	138.4	143.5	134	139.1	144.3	138.3	157	154.9	143.3	144.6	140
7	28	2007	142.1	136.6	142.1	138.2	139.9	135.8	136.4	135.4	157.4	148.6	149.1	148.4
7	29	2007	140.6	134.9	140.6	140.7	139.9	135.1	140.9	138.7	138.6	156.8	146	144
7	30	2007	137.8	135.4	137.8	139.3	137.1	141.7	135.7	135.3	143.6	145.4	137.1	142.2
7	31	2007	136.6	142.2	136.6	136.2	134.3	135.5	143.7	135.9	143.6	144.7	135.9	135.2
8	1	2007	134.5	142.7	144.3	134.1	143.2	134.4	141.8	157	152.4	141.6	152.9	133.7
8	2	2007	133.7	142.7	144.5	134.3	143.2	137.8	141.6	137.1	153	140.2	158.8	134.1
8	3	2007	135.6	140.7	142.9	144.5	140.9	143	139.4	154.6	152.8	140.6	134.7	136.3
8	4	2007	135.6	142.7	136.7	135.3	133.5	140.3	144.1	138.4	149.8	148.3	137.1	144.5
8	5	2007	135.1	142.4	134.5	134.9	133.6	142.1	135.8	134.1	156.2	146.4	145.7	142.8
8	6	2007	136.2	144.2	138.8	134.8	143.3	134.8	144.3	134.9	152.7	140.2	154.9	137
8	7	2007	135.1	142.7	142.1	138.8	142.7	134	143.2	133.8	150.8	140.1	137.8	145.3
8	8	2007	134.8	143.1	136.6	133.7	142.8	143.3	141	134.7	145.3	144.3	137.8	134.8
8	9	2007	137.1	139.9	134.1	134.8	138.8	134.5	144.5	137.8	146.3	147	136.4	135
8	10	2007	138.4	133.6	135.1	136.2	134.4	135.2	135.1	136.5	146.4	147.1	140.1	137.1
8	11	2007	135.5	142.8	141.1	135.2	134.4	141.2	137.7	144.3	153	151	141.2	147.3
8	12	2007	134	142.3	143.4	133.6	144.5	140.8	134	133.9	155.8	145.6	146.2	139.8
8	13	2007	136.6	142.2	144.1	136.7	142.7	143.4	140.2	151.8	146.4	137.3	134.8	145.3
8	14	2007	134.4	142.3	144.4	142.3	141.7	144.1	138.9	152.8	144.3	157	155.3	153.5
8	15	2007	142.3	141.6	142.3	133.4	143.4	133.7	142.9	147.3	151.3	138	133.5	155.3
8	16	2007	143.3	138	141.7	143.7	141.5	142.6	139.2	152.8	145.4	134.8	134.2	134.2
8	17	2007	134.2	143.3	138.9	134.2	137.8	138.1	136.8	133.7	145	144.7	140.6	137.9
8	18	2007	133.6	143.3	136.7	135.5	134.4	141.2	134.2	134	153.7	150.1	140.9	137.6
8	19	2007	135.8	143.4	133.4	136.3	134.7	144.2	137.5	138	136.1	150.1	142.6	143.7
8	20	2007	137.3	139	135.3	134.9	143.1	135.1	142.6	135.3	143.2	137.3	134.5	134.2
8	21	2007	136.7	143.4	142.8	133.7	142.3	136.7	144.1	137.7	152.4	138.6	135.3	135.5
8	22	2007	136.9	134.5	134.2	136.8	137.8	136	141.9	137	146.5	144.9	134.9	135.3
8	23	2007	135.6	143.5	133.7	134.9	144.2	144.5	143.4	135.4	151.1	139.6	136.6	135.9
8	24	2007	134.7	144.2	133.8	135.1	143.9	135.5	134.1	155.7	150.7	142.6	141	135.7
8	25	2007	141.9	140.2	143.1	136.8	144.3	137.8	144.1	140.7	145.4	145.3	137.1	146.9
8	26	2007	136.7	135.7	135.9	138	136.9	134	142	143.7	153.9	155.5	146	142.6
8	27	2007	140.8	135.4	137.3	138.4	135.5	140.8	137.4	155.3	148.1	144.9	146.4	135.4
8	28	2007	137.9	133.9	135.4	136.2	135.6	136.3	134.1	137.5	149.5	138.6	140.1	136.6
8	29	2007	141.6	134.4	135.6	137	135.6	135	135	137	145.4	137.7	140.1	136.7
8	30	2007	137.5	143.2	133.7	135	143.6	142.2	137.5	134.2	146.1	146.4	136.3	135
8	31	2007	136.7	144.3	136.7	135.2	143.2	141.1	135.5	155.8	151.2	140.1	133.8	136.8
9	1	2007	135.5	142	141.1	134.1	133.6	143.1	134.4	134.5	154.2	144.7	144.9	141
9	2	2007	140.3	141.1	135.6	137.6	136.7	135.6	140.8	143.4	156.2	150.3	148.7	145.6
9	3	2007	134.1	141.7	144.5	133.5	142.3	138	142.8	143.1	153.1	142	143.4	138.8
9	4	2007	136.6	144.3	134.3	134.9	141.2	136.6	140.3	136.2	145.2	139.2	138.2	137
9	5	2007	143.5	134.1	135.6	136.6	134.1	136.7	137.6	155.9	151.4	145.1	147.9	144.2
9	6	2007	136	142.4	137.8	133.7	140.1	144.5	134.5	157.2	144.3	137.2	138.6	133.9
9	7	2007	137.1	134.5	134.7	136.2	135.2	134.8	137.3	134.5	145.5	139.9	142.7	136.2
9	8	2007	133.8	142.8	137.8	134.2	136.7	137.5	142.8	141.8	153.9	144.5	142.9	137.1
9	9	2007	135.2	141.9	135.7	134.9	136.8	142.3	134.9	135.1	134.9	153.5	147.4	152.6
9	10	2007	134.1	141.7	144.5	133.4	142.3	138	142.7	143	153.2	142.1	143.3	138.6
9	11	2007	136.6	142.8	144.5	133.6	143.5	144.4	136.9	157.4	143.2	147.8	139.4	137.5
9	12	2007	141.3	133.4	135.2	135.8	134.1	134.4	139.1	134.3	148.7	141.8	145.1	140.2
9	13	2007	140.8	140	135.1	136.3	136.7	133.8	137.4	135.9	148.3	141.6	146.8	137.9
9	14	2007	140.4	144.2	134.5	135.6	136.7	144.5	136.7	133.7	150.7	142.5	145.5	139.6
9	15	2007	133.4	141.6	144.2	137.8	143.8	137.1	142.4	139.6	150.8	141.8	137.7	147.1
9	16	2007	134.8	142.2	135.5	135.3	142.6	141.9	134.7	137.1	136.3	154.3	145.5	151.9

2007 Running Cost
Is this a leap year? n

Month	Day	Year	1	2	3	4	5	6	7	8	9	10	11	12
9	17	2007	140.5	137.8	134.4	134.8	144.4	134.4	136.7	156.4	143	137.6	141.3	152.6
9	18	2007	140.4	135.5	135.3	136.3	138.9	136.6	134.7	134	147	140.2	141.9	135.6
9	19	2007	133.4	144.1	135.5	134.1	143.2	144.1	156	141.2	146.3	143.4	143.4	138.6
9	20	2007	137.8	135.5	133.4	135.5	143	138.9	135.6	153.3	143.8	138.4	143.3	141
9	21	2007	140.4	140	133.7	134.8	135.5	144.5	135.2	155.6	153.1	136.6	140.8	140.4
9	22	2007	137.1	144.4	133.8	136.4	134.5	141.3	142.4	142.1	154.8	148.5	143.8	150.6
9	23	2007	143.3	135.8	137.5	139.1	137.4	136.7	138	141	157.4	151.9	152	147.4
9	24	2007	136.2	139.2	139.9	139.7	140.4	142.4	137.2	157.4	155.4	147.6	140.1	147.8
9	25	2007	144.4	136.3	138	139.1	136.2	137.5	142.2	154.9	153.8	147	147.4	144
9	26	2007	143.9	136.4	137.5	138.6	135.3	135.9	139.7	138.2	152	143.6	138.8	146
9	27	2007	142.4	133.8	136.3	138.5	135.9	135.1	137	153.3	151.8	146.9	137.2	144.1
9	28	2007	137.8	143.4	133.7	134.7	144.5	143.7	135.6	157.2	144.7	144.9	137.8	134.9
9	29	2007	137	137.8	134.2	135.9	134.7	141.6	144.5	141.4	148.8	152.8	143.8	141.2
9	30	2007	134.8	142.4	140	135.6	135.5	141.9	134.1	135.1	133.9	148.7	149.9	143.3
10	1	2007	144.5	136.7	141.5	143.5	140.9	142	156.7	150	152.6	138.7	138.8	140.9
10	2	2007	137.1	144.5	138.9	134.5	143.5	144.4	137.7	136.9	149.3	144.5	137.2	142
10	3	2007	140.1	138.9	134.2	135.1	144.4	140	136.9	136	156.5	152.5	143.5	140.5
10	4	2007	141.2	144.5	134.2	143.8	133.6	143.4	137.3	135.1	149.9	143.9	138.4	140
10	5	2007	137.8	143.4	134.4	134	133.8	137.8	139.1	133.9	148.4	143.3	137.9	138
10	6	2007	140.1	143.4	133.4	135.2	133.8	141.2	134.4	144	151.8	150.3	142.6	140
10	7	2007	137.4	144.2	134.2	136.2	136	142.3	136	138.8	138	156.2	142.5	152.9
10	8	2007	140.8	141.1	133.4	134.9	135.5	135.5	140.3	138	151.4	141.5	145.2	138.8
10	9	2007	143	134	135.1	135.3	135.5	135.9	135	155.7	151.9	149.2	141.7	137.6
10	10	2007	142.2	134.5	135.3	136.2	133.4	135.5	141.3	138.2	152.1	146.4	142.2	145.8
10	11	2007	141.5	133.7	134.7	135.5	136.7	136	139.3	137.3	148	143.1	136.7	143.1
10	12	2007	134.4	140.8	144.5	134.2	144.4	135.6	138.4	150.5	149.9	145.7	140.1	144.3
10	13	2007	141.5	137.8	134.9	136.2	135.6	142.3	135.1	133.8	153.3	146	143.6	141.8
10	14	2007	142.7	134.1	136.3	137.8	135.6	133.4	138.2	142.3	137.9	148.6	152.1	149.9
10	15	2007	143.5	134.2	134.9	136.5	134.1	140.2	138.3	153.6	145.6	141.6	147.2	140.6
10	16	2007	140.7	134.5	135	134.1	134.5	138.1	134.7	156.7	150.4	136.8	146.6	144.6
10	17	2007	142.9	134.2	133.8	136.4	135	135.6	137.2	136.1	151.8	146.2	137.5	144.2
10	18	2007	135.6	134.7	136.1	136.7	134.3	138.2	138.1	154	152.7	145.6	137	144.7
10	19	2007	142.9	134.7	136	136.4	135.6	137.2	141.2	153.9	154	143.4	137.5	147.7
10	20	2007	142.5	135.3	137.4	138.9	138.2	134.6	140.2	140.3	155	157	151.8	147.4
10	21	2007	142.9	134.7	136.4	137.6	136.6	136.7	137.4	140.2	155	152.6	150.8	152.7
10	22	2007	140.4	140	134	135.5	140	138.9	133.6	154.6	152.1	142.5	138.3	152.7
10	23	2007	142.3	134.4	135.6	136.4	134.9	135.6	140.2	137.5	150	142.3	145.5	143.2
10	24	2007	143	134.2	135.1	135.6	136.7	137.8	134.9	144.2	144.5	140.1	141.7	134.7
10	25	2007	142.4	134.4	134.8	136.2	135.1	136	137.1	135.7	144.4	145.8	139.5	143.4
10	26	2007	136.4	143	134.2	135.6	135.5	133.6	135.2	136.9	145.6	136.5	144.4	138
10	27	2007	137.1	144.5	135.5	134.9	133.8	140.6	141.3	141.3	155.4	146.7	151.4	146.6
10	28	2007	142.8	134	135.6	137.1	136.6	144.5	134	138.1	156.5	151.1	156.8	155.1
10	29	2007	134.8	139.2	139.3	139.7	137.3	140.2	139	135.9	151	145.5	140.4	146.5
10	30	2007	137.9	136	137	137.5	135.5	137	139	137.9	150	146.3	140.4	140.6
10	31	2007	136.8	135.9	136.6	138.4	135.8	136.2	138.8	136.6	152.2	145.1	137.1	146.5
11	1	2007	134.5	138.8	139.3	135.2	119.3	137.3	141.1	138.7	155.3	151.3	147.1	143.1
11	2	2007	140.7	128.8	120.6	119	126.7	136.2	135.2	142.1	152.2	148.8	144.2	141.4
11	3	2007	142	139.9	132.9	123.1	124.9	137.6	134.2	143.2	134.6	156.3	151.1	152.9
11	4	2007	136.8	136.7	119.9	118.4	117.5	128.8	140.5	140.5	135	148.6	157.4	154.8
11	5	2007	135.4	144	133.7	135.9	143.6	139.5	140.2	157.5	154	141.2	143.4	139.8
11	6	2007	140.7	135.7	141.6	144	138.1	138.8	157	152.7	144	141.2	145	141.5
11	7	2007	140.5	141.1	133.9	135.9	142.6	139.9	157	155.1	148.6	145.9	138.2	146.3
11	8	2007	141.1	135.9	140.2	141.3	133.7	144.1	148.1	146.8	150.4	147.1	141.3	139.5
11	9	2007	138.9	135.1	137.6	137.9	134.6	143.3	157	152.5	148	144.2	140.5	140.1
11	10	2007	135.1	143.1	135.3	138.2	135.5	139.1	138.5	139.6	154.3	147.9	142.4	141.8
11	11	2007	136.7	139.6	137.5	139.5	138.2	143.1	144.3	142.9	145.4	156.8	150.4	146
11	12	2007	138.7	138	143.3	144.3	136	141.8	133.5	157.1	150.5	147.6	141.1	139.2
11	13	2007	141.8	135.7	138.4	141.2	133.9	140.8	157.4	154.9	147.4	142.5	137.2	145.3
11	14	2007	141.2	134.1	138.4	138	133.8	141.9	156.6	153	145.8	143.8	139.6	137.6
11	15	2007	141.1	134.1	137.9	138.3	134.4	142.5	138.8	139.1	156.4	141.4	143.8	142.7
11	16	2007	141.4	135	140.1	140.8	138.3	139.3	136	136.3	149	144.7	148.8	148
11	17	2007	140.2	134.6	138.7	140.8	139.1	144.1	144.4	143.2	157.1	153.3	149	146.3
11	18	2007	140.3	134.9	138.6	139.9	139.1	144.3	142.9	134.8	153.9	150.5	152	149.7
11	19	2007	144.3	140.3	139.8	133.7	139.1	136.6	140.1	154	148.2	149.3	141.3	146.8
11	20	2007	141.4	134.3	137.9	141.2	137.3	141.9	151.8	153.8	144.1	140.9	145	142.8

2007 Running Cost
Is this a leap year? n

Month	Day	Year	1	2	3	4	5	6	7	8	9	10	11	12
11	21	2007	143.2	136.9	141.5	142.7	135.7	144.3	145.4	148.7	151.5	146	146.2	139.9
11	22	2007	134.8	144.3	140.1	140.7	138.4	135.6	142.3	152.3	155.3	142.9	135.6	145.3
11	23	2007	140.8	135.1	137.5	138	134.2	140.3	133.4	134.8	148.9	151.9	143.9	141.4
11	24	2007	140.2	134.6	138.7	140.8	139.1	144.1	144.4	143.2	157.1	153.3	149	146.3
11	25	2007	140.3	134.9	138.6	139.9	139.1	144.3	142.9	134.8	153.9	150.5	152	149.7
11	26	2007	142.8	137.5	142.5	143.1	136	143.6	157.2	156.5	151.8	139.3	143	140.2
11	27	2007	136.4	142.1	135.4	134.6	141.3	137.5	144.3	156.5	141.5	142.7	139.9	139.1
11	28	2007	134.3	141.9	134.2	134.4	139.5	136.6	144.7	157.1	149.2	138.1	141.5	142.7
11	29	2007	135	144.2	140.1	140.6	138.4	135.7	142.5	152.4	155.3	142.9	135.9	145.2
11	30	2007	140.8	135.2	137.5	138	134.2	140.2	133.6	134.9	148.8	151.7	143.8	141.4
12	1	2007	136.7	141.3	139.8	133.7	143.9	139.8	143.6	135.4	157.6	150.7	141.5	139.2
12	2	2007	135	139.5	142.4	144.1	140.8	135.9	143.7	138.5	155.7	145.7	147.9	145.7
12	3	2007	144.4	137.5	138.8	140.2	136.2	137.7	143.7	156.7	149.1	141.9	151.4	147.1
12	4	2007	143.9	135.1	138.2	138.5	136.2	135.6	142.2	155.3	155.2	151.8	146.8	144.2
12	5	2007	135.6	137.4	139.6	139.9	137.1	143.5	144	140.4	154.8	151.4	143.5	150.2
12	6	2007	134.4	137	140	140	137	137	138.6	134.9	153.1	143.9	146.6	142.7
12	7	2007	138.9	137.4	139.3	138.5	135.1	135.5	138.2	135.3	150.8	146.3	149.9	144.7
12	8	2007	143.3	135.2	138.4	138	136	143.9	136.6	140.7	135.3	148.6	155	147.6
12	9	2007	142.4	134.5	136.6	138.8	137.1	140	136.5	141.8	138.1	152.7	147.4	156.5
12	10	2007	136.3	139.9	140.2	137.8	133.6	139.3	156.2	155.6	146.8	150.9	147.3	147
12	11	2007	140.3	138	139.1	139.5	135.8	134.9	139.4	156.7	149.6	149.4	142.6	151.9
12	12	2007	135.9	139.3	133.5	138.8	137.8	141	139	138.9	134.5	152.3	148.6	154.9
12	13	2007	134.1	138.4	138.8	139.8	137.5	136.6	136.5	139.4	149.2	150.1	146.5	145.3
12	14	2007	134.2	137.7	140.3	138.6	135.1	136.2	137	153.4	135	148.3	143.9	152.8
12	15	2007	142.6	136.9	138.6	139.3	137	142.8	136.8	138.2	138.7	149.1	157.2	155.6
12	16	2007	133.8	138.1	140.3	139.8	139.6	134.5	140.3	141.4	135	156.4	151.3	151.9
12	17	2007	135.6	139.5	138.8	140.7	137.7	137.4	140.6	157.4	149	145.7	144.3	147.3
12	18	2007	134.4	138.2	140.7	140.2	136.4	137.1	142.2	134.5	154.8	155.7	153.1	150.1
12	19	2007	136.6	140.4	133.4	135.2	139.1	143.4	143.2	135.9	155.9	147.9	157.5	152.4
12	20	2007	137.3	135.2	136.7	135.9	139.1	142.4	133.9	138.4	135.3	157.6	156.7	151.6
12	21	2007	135.5	138.9	138.2	138.8	138.8	140.9	142.9	141.4	136.1	143.8	153.4	151.6
12	22	2007	135.1	139.2	138.2	138.2	138.2	138.9	136.7	140	155.8	156.3	151.1	151.5
12	23	2007	137.8	138.6	140.1	140.4	138.5	142.3	138	143.9	135.6	136.1	138.5	153.1
12	24	2007	144.1	137	139.5	139.7	137	136.6	143.9	134.1	150.2	146.1	152.1	152.8
12	25	2007	142.4	137.1	140.7	137.5	140.3	135.8	141.5	135.8	140.2	156.3	153.8	153
12	26	2007	134	138.8	140.4	140.2	137.1	138	142.8	133.6	150	141.8	150.3	149.1
12	27	2007	140	134.9	137.7	138.4	136.4	138.1	136.5	135.5	157.1	147.8	141	142.1
12	28	2007	143.4	134.7	137	137.4	141.7	142.3	144	157.5	149.1	148.3	143.5	142.5
12	29	2007	143.8	137	140.2	139.9	138.4	133.4	136.4	142	155.5	148.4	156	157.5
12	30	2007	142.4	137.1	140.7	137.5	140.3	135.8	141.5	135.8	140.2	156.3	153.8	153
12	31	2007	134.4	139.2	140.7	139.7	138	138.9	136.4	143.1	157.4	147.9	153.4	151.6

2007 Running Cost
Is this a leap year? n

Month	Day	Year	1	2	3	4	5	6	7	8	9	10	11	12
	Based on Hour Ending		1	2	3	4	5	6	7	8	9	10	11	12
	Total $ by Hour		50,922	49,552	48,218	47,218	48,862	50,900	51,642	52,771	53,599	53,158	52,983	52,944
	Total Obs by Hour		365	365	365	365	365	365	365	365	365	365	365	365
	Off Peak Hrs ($)		50,922	49,552	48,218	47,218	48,862	50,900	51,642					
	Total Off Peak Obs by I		365	365	365	365	365	365	365					
	Mid Peak Hrs ($)									52,771	53,599	53,158	52,983	52,944
	Mid Peak Obs by Hour									365	365	365	365	365
	Priority Peak Hrs ($)													
	Priority Peak Obs by Hour													
	Total $ Check		0.00	0.00	0.00	0.00	0.00	0.00	0.00	0.00	0.00	0.00	0.00	0.00
	Total Obs Check		0	0	0	0	0	0	0	0	0	0	0	0

Total Avg. $/Mwh	$142.35
Off Peak Avg. $/Mwh	$138.46
Mid Peak Avg. $/Mwh	$145.10
Priority Peak Avg. $/Mwh	$145.25

13	14	15	16	17	18	19	20	21	22	23	24	SUM	DOW
144.3	145.6	147.2	151.8	142	134.9	152.2	139.4	145.9	148.9	136	139.9	3393.1	1
149.1	145.2	146.7	145.3	142.6	136.8	154	134.5	137.1	143.4	148.1	142.6	3406.2	2
144.4	142.5	141.9	140.4	140.3	138.7	155	160.7	135.7	142.4	146.8	142.5	3413.5	3
139.3	140.8	145.5	143.4	141.9	139.5	159.8	156.9	135.7	148.4	134.4	139.4	3394.9	4
142.3	141.9	142.3	143.1	141.6	141.3	156.8	135.3	145	143.8	135.5	137.2	3414.3	5
144.3	145.6	147.2	151.8	142	134.9	152.2	139.4	145.9	148.9	136	139.9	3393.5	6
144	152.8	147.1	145.1	149.6	137	148.8	136.1	143.1	148.7	133.8	142.2	3415	7
146.5	147.1	150.7	147.7	144.7	136.9	158.9	159.7	137.8	152.3	135.7	141.8	3430.9	1
149.2	145.3	146.8	145.4	142.6	136.7	153.9	134.3	136.9	143.4	148.1	142.6	3405.8	2
144.4	142.5	142	140.4	140.3	138.5	154.9	160.8	135.7	142.5	146.8	142.5	3413.4	3
139.3	140.9	145.6	143.5	142	139.5	159.9	156.9	135.7	148.5	134.2	139.5	3395.5	4
142.4	142	142.4	143.2	141.7	141.4	156.8	135.1	145.1	143.8	135.3	137.1	3415	5
142.5	141.9	150.4	148.1	144.8	140.3	133.6	134.3	142	152.9	136.2	136.5	3401.8	6
147.7	150.9	155	151.1	148.5	138.6	144.1	139.3	151.5	154.3	134.7	134.3	3448.1	7
159.4	151.7	133.5	139.9	153.5	154.9	154.9	154.4	155	134.9	142.7	140.7	3490.6	1
159.5	158.4	136.7	154.5	160.6	159.6	158.5	158.4	155.9	135.6	143.8	135.1	3553.2	2
138.3	134.1	149.7	153.5	157.5	155.5	158.3	158.2	153.9	133.5	145.4	135.2	3494.6	3
159.7	157.4	158.4	156.7	154.9	153.2	166.5	158.7	152.2	156.4	151	154.2	3597.3	4
152.9	155.7	155.7	160	151.5	153.9	159	153.3	158.1	151.8	140.8	153.3	3600.7	5
153.5	158.4	154.6	152.6	159	159	167.3	158.3	158.8	151.5	140.2	155	3622.6	6
157.4	158.6	143.6	160.5	155.8	155.1	158.9	156.3	160.2	156.8	147.3	151.6	3585.9	7
137.8	142.8	147	146.9	145.9	139.5	160.5	158.6	148.8	139.4	151.1	136.8	3464.2	1
147	140.3	142.9	142.3	140.3	143.5	157.3	143.6	141.4	144.7	138.4	140.4	3426.6	2
144.2	147	145.7	145.3	143.6	138.6	160.4	143.6	141.2	151.5	135.1	139.9	3430.9	3
138.5	141.3	142.3	138.9	137.5	138.9	160.4	151.6	143.6	148.3	135.5	139.9	3423.9	4
140.4	142	143.1	145.8	147.9	140.6	135.7	137.9	144.8	149.2	153.7	140.6	3425.3	5
151.9	152.6	155.7	149.3	143.6	147.6	142.1	140.5	148.1	153	156.3	142.4	3463.2	6
152.6	143.5	152.1	147.7	144.3	142.3	134.7	134.9	147.9	152.3	152.9	140.2	3381.4	7
143.1	144.2	141.5	140.9	138.5	137.4	156.7	159.2	136.6	141.9	154	137	3423.4	1
141.8	140.7	139.4	140	135.5	137	157.4	160.1	143.8	143.1	142	138.1	3417	2
141	141.2	138.8	138.1	137.2	136.5	155.2	138.9	146.5	145.1	156.5	136.4	3402.2	3
144.3	147.2	145.5	141.6	142.4	139.8	148.9	134.8	141.6	150	137	140.2	3369.1	4
160.3	156.1	153.5	155.8	153.1	154.9	158.2	157.2	160.3	135.5	145.8	150.5	3586.8	5
149.7	147.3	147.6	145.8	140.9	146	137.4	143.6	147.4	153.7	157.4	144.5	3369.2	6
143.5	142.7	151.1	148.2	142.3	137.9	133.6	135.4	147.5	149.1	157.2	135.9	3355.7	7
136.6	140.8	141.6	139.1	137.9	139.3	142.9	155.7	139.3	151	136.4	140.2	3314.7	1
149	151.8	143.1	141.9	148.9	139.2	144.3	138.6	151.2	154.3	139.4	142	3383.5	2
152.3	144.1	144.6	151.2	146.2	137.3	135.7	135.9	142.9	155.3	142	135.6	3330.4	3
143.8	144.5	149.6	144.5	146.8	136.7	135	138.6	142.7	155.3	137.7	142.5	3297.2	4
149.9	150.1	151.5	147.8	142.6	138.3	138.4	138.6	141.9	151.1	156.7	134.6	3343.3	5
149	147.7	146.5	139.2	136.9	138.5	134.1	136.4	145.7	144.9	156.8	141.2	3333.9	6
140.9	139.7	144.5	141.5	140.9	138.3	136.1	134.8	137.7	152.3	155.2	134.1	3319.5	7
137.5	138.5	137.6	139	138.5	137.7	156.1	155.3	137.2	145.1	134.8	142.4	3318.5	1
139.8	138.2	140.8	140	142.3	138.8	136.7	135.3	138.1	147.2	153.6	133.9	3353.2	2
139.3	140.4	137.1	139.3	137.9	136.3	139.7	151	140	146.6	134.8	143.3	3353.6	3
137	138.4	138.2	139.1	140	140	135.5	160	139.2	149.8	152.9	136.8	3355.9	4
140.8	139.6	139.3	138	142.7	137.2	137.9	136.9	149	145.4	150.1	142.5	3334.2	5
154.9	155.9	155.2	151.4	147.8	151.1	141.6	142.6	146.4	155.1	137.9	136.1	3411.1	6
149.7	149.3	150.8	148.8	154	145.8	139.3	139.8	145.8	156.8	142.7	136.2	3367.5	7
153	150.9	151.9	149	148.2	144	141.1	136.7	142.7	154.3	139.5	141.5	3328.3	1
151.2	145.2	144.9	142.9	141.8	137.8	137.2	135.8	144	148.1	137.5	138	3298.2	2
147.9	149.4	150.9	146.7	145.5	141.4	136.7	135.2	151.5	149.1	134.5	140.2	3349.6	3
147.7	149.3	146.9	141.4	139.4	139.4	139.4	134.1	148.3	145.4	154.9	137.4	3350.3	4
146.8	146.2	142.6	141.6	145.5	143.4	140.1	138.3	145.9	145.8	156.6	143.8	3361	5
154.3	157	157.3	154.4	146.6	152.3	140.5	137.6	153	157.5	137.4	136.7	3406.4	6
148.1	149.1	149.4	153.2	149.8	144	140	138.5	143.3	156	139.3	137.8	3343.8	7
148.5	147.4	143.8	152.4	144.7	139.8	138.5	136.1	145.9	144.8	138	138.1	3314.9	1
149.8	148.4	143.4	137	136.8	139.3	136.4	143.3	140.6	149.5	157.1	135.4	3322.2	2
144.1	143.5	140.5	138.5	137.1	141.7	139.7	136.1	143.9	150.4	153.9	144.2	3346.3	3
												0	
147.5	146.3	145	143.5	142.2	141.3	139.8	138.8	145.1	150.4	153.6	142.3	3358.4	4
154.4	135	136.4	135.2	136.2	135.4	157.6	152.9	134.7	135.1	145.6	147.1	3399.7	5
138.8	141.1	139.8	137	136.2	137.2	152	160.1	135	137.5	143.4	137.5	3364.5	6
143.7	141.6	141.5	139.6	138.2	135.4	159.3	158.4	154.8	135.8	150.2	155.6	3457.9	7
151.1	150.9	148.6	145.4	148.8	144.1	141.2	136.6	148.3	145.8	157.5	135.5	3361.9	1

13	14	15	16	17	18	19	20	21	22	23	24	SUM	DOW
142.8	152.9	151.3	146.5	145.4	145.4	141	139	141.9	147.5	156.2	137.1	3090	2
143.2	152.9	150.5	148.6	147.5	145.2	139.3	137.9	141.5	144.4	157.4	137.8	3120.7	3
150.2	147.8	149.3	146.8	141.8	144.1	138.3	139.6	148.5	150.8	153	133.4	3250.6	4
147.8	147.1	144.7	143.6	148.1	148.5	137	139.5	142.6	148.3	152.9	141.1	3208.7	5
143.2	147.4	144.6	152.6	150.2	147.2	139.5	138	152.7	146.9	136	138.4	3340.1	6
152.8	151.1	152.1	152.9	146.9	152.2	138.1	138.3	141.2	147.5	156.3	144.5	3412.5	7
143	141	139.2	138	138.5	136.5	137.4	136.6	140.9	145.5	155.9	138	3191.3	1
137.1	141.6	139.2	137.9	139.4	139.6	133.5	152.9	135.6	138.9	149.8	143.2	3348.1	2
142.9	148.4	148.2	145.1	144.7	139.8	138.3	134.2	145.9	149.3	135.3	143.3	3417.2	3
148.9	151.6	152.5	152	147.2	152.6	138.9	141.3	144.1	153.6	136.2	140.1	3356.1	4
148.3	148.9	148	148	145.8	142.9	143.7	141.8	148	150.1	142.9	140	3035.7	5
152.4	151.5	150.9	151.2	151.5	154.2	152.9	145.4	147	150.4	140.6	141.7	3263.7	6
157.2	156.3	155.3	154.9	147.3	151.3	150.1	144.2	144.3	151.3	133.8	135.1	2991	7
145.1	148.1	150	148.5	145.9	138.1	134.4	158.8	154.4	138.4	152.9	156.1	3448.2	1
144.7	146.4	150.1	149.4	146.5	142.3	140.2	159.5	134.8	137.2	155	134.2	3416	2
141.3	144.2	138.1	141.2	138.5	138.6	151.7	153.8	143.6	138.4	150.5	156	3403.3	3
140	138.4	138.4	134	139.5	135.8	134.5	160.4	151.6	134.8	147.2	137.7	3368.4	4
138.5	139	139.7	139	139.7	134.3	159.5	159.5	135.8	136.4	143.4	149.4	3403.9	5
142.1	146.3	145.4	144.8	138.4	137.4	140.1	152.1	139.5	136.5	144	149.4	3421.1	6
139.1	141.1	140.8	139.9	141.4	139	140.2	158.2	134.8	136.8	144.3	133.7	3397.4	7
147	148.2	144.7	142.3	143	139.2	141.6	135.7	145.9	149.4	136.8	140.2	3104.8	1
143	142.6	138.3	136.8	140.1	138.4	136.9	136.7	140.9	141	156.1	134.3	3305.6	2
141	140.6	140.2	137	139.4	139.9	135.9	148.3	138.9	137.3	147.8	141.9	3345.7	3
139.9	136.9	138.4	135.4	135.5	135.9	134.4	140.5	136.2	138.2	150.6	141.8	3333.8	4
141	141.2	142.3	143	143	137.9	138.1	137.3	139.3	146.9	153	141.7	3364.6	5
151	156.5	156.4	147.6	153.3	145.6	143.8	140.7	143.3	152.1	133.4	144.2	3459.4	6
138.7	142.3	141.6	140.3	133.8	154.8	148.5	148	148.2	138.7	139.5	134.6	2771.2	7
150.8	150.4	151	148.9	144.7	137.8	140.3	160.5	144.6	143.6	151.8	134.8	3468.9	1
143.6	144.1	143.3	140.4	144.2	146.2	135.5	145.8	142.5	148.2	145.4	139.9	3379.8	2
146.4	135.5	136.6	135.7	137	144.6	135.7	158.2	145.8	152.1	144.2	141.7	3368.9	3
142.9	142.6	142.6	144	145.2	141.8	144.4	143.6	136.1	144.7	133.7	140	3376.6	4
147	148.2	147.4	148	149.9	149.5	146.4	144.4	141	150.3	140.9	138.6	3439.1	5
150.7	148.5	151.4	151.4	148.1	141.5	143.7	137.7	144.4	150.1	139.8	141.8	3419.4	6
156.8	155.4	153.2	155	144.5	144.3	137.5	141.2	148.8	149.5	134.2	142.9	3449.5	7
150.7	146.8	150.1	146.6	150.2	149.7	143.3	142.3	143.8	152.1	139.7	137.7	3462.1	1
147.6	148.3	144.3	150.1	149.5	143.5	135.1	144.2	151.5	153.8	133.9	142.1	3435.3	2
149	147.5	146.5	147.9	147.8	144.2	142.3	137.4	143.9	153.3	141.5	141.7	3440.8	3
145.7	143.6	141.3	141.4	144.3	142.4	141.8	136.6	136.3	147.1	140.9	139.4	3419	4
136.9	136.3	146.8	136	143	145.7	136.7	140.5	139.4	143.2	155.4	144.4	3396.8	5
149.5	142.1	142.8	143.5	149.1	145.7	138.4	139.8	142.5	151.6	153.9	135.3	3451.7	6
150.7	151.4	148.6	147.4	142	147.3	136.6	135.7	148.8	151.1	156.2	142.2	3473.8	7
145.7	137.2	135.3	135.9	138.5	136.7	135.8	140.8	140.1	148.3	154.8	139.6	3400	1
139.7	140	141.9	142.6	141.9	138.9	138.9	155.5	140.7	152.1	154.9	139.3	3416.7	2
137.1	136.1	145.9	146.4	138.6	137.8	142.7	134.7	135.7	141.1	153.3	135.6	3383.7	3
146.3	136.1	136	135.3	136	146.1	139.6	158.3	139.7	144	152.4	137.7	3385.9	4
136.4	136.7	138.6	136.8	139.6	141.2	136.6	139.8	143.4	143.5	153	133.8	3375.6	5
150.8	142.9	142.6	151.8	148.8	146.4	142.2	143.3	145.5	148.4	154.5	135.2	3460.9	6
145.9	147.2	147.6	145.8	141.1	146.3	140.8	136.4	150.2	153.1	142.1	138.5	3455.3	7
135.4	146.3	144.9	145.7	138	135.4	135	136.7	138.8	149	135	141.5	3386.1	1
141.1	143.6	144.7	140.6	146.8	142.4	154.4	140	148.7	153.2	142.7	141.9	3457.9	2
140.9	143.9	141.4	141	144.1	143.5	138.7	135.7	140.6	144.8	156.5	140.5	3396.8	3
144.1	140.5	140	137.4	140.6	140	145.8	158.2	145.3	150.5	155.1	139.1	3448	4
144.5	141.1	140.9	141	144.5	146.9	146.7	138.5	141.6	150.7	157.3	139.7	3460.6	5
150.1	149.7	151.9	150.7	149.3	145.7	150.2	143.9	143.4	151.9	134.9	143.7	3474.5	6
147.1	157.6	150	154.8	153.7	148.1	141.3	140	143.5	152.5	136.9	133.8	3447.6	7
134.1	134.1	134.8	144.3	136.1	136.1	157	157.9	154.1	139.1	140.3	143.1	3283.4	1
153.4	134.2	134.5	150.5	150.2	135.3	142.4	160.5	159.3	136.8	141.6	134.4	3126.7	2
150.8	150.4	147.6	150	145.4	135.2	145.9	158.4	147.6	143.5	139.2	137.6	3320.9	3
141.9	142	136.7	137.6	137.7	135.3	149.8	145.4	138.4	143.5	133.8	144.1	3255.7	4
136	135.9	135	146.4	134.5	136.2	141.8	154.9	138.9	133.9	140	137.9	3176.2	5
141.4	144.3	142.5	141	137.9	134.8	146.4	148.2	133.9	137.2	140.3	142.8	3260.5	6
136.6	134.2	134.8	143.4	141	134.6	138.1	150.4	137.8	134	140.6	135.6	3225.1	7
158.8	148.4	145.8	155	149.7	146.4	155.9	155.5	156.9	135.6	134.7	140.5	3374.5	1
157	159.4	156.5	158.4	151.4	157	154.6	151.8	152.3	135.4	143.2	133.6	3468.2	2
157.4	158.7	154.1	154.6	153.7	158.4	155	156.7	159.2	142.9	140.1	138.1	3508.3	3

13	14	15	16	17	18	19	20	21	22	23	24	SUM	DOW
152.6	156	159.5	155.5	154.6	160.3	160.3	152.8	157.7	144.8	138.9	141.4	3525.5	4
160.5	160.6	160.4	158.2	153.2	155.9	150.8	154.1	155.9	152.6	137.4	138.5	3556.8	5
135.7	140.3	152.4	135.3	135.1	134.3	139.3	145.8	134.3	136.9	144.4	142.4	3345.5	6
143.3	143.3	142.1	141	137.9	134.5	157.3	149.5	140.4	140.5	137.3	134.8	3343.5	7
159.6	152.6	155.3	152.5	148.3	150.4	156.8	154.8	150	156.6	135	133.9	3497.8	1
148.3	156.2	154.9	156.2	160	157.9	154.2	157.6	159.1	152.7	144.4	135.6	3485.8	2
156.8	158.7	160.1	156.5	154.3	152.3	152.1	155.6	154.2	135.5	141	133.5	3451.4	3
157.1	159.5	158.7	155.9	145.6	151	154.1	158.4	152.3	155.7	142.3	133.7	3494.2	4
156.8	158.3	153	147.7	139.2	134.9	144	159.5	150.5	141.7	143	142.8	3465.2	5
134.4	134.7	134.9	136.7	137.8	148	155.1	143.1	134.8	139.2	143.6	140.6	3312.5	6
139.6	140.3	139.5	134.4	134.3	136.7	145.4	160	154.1	137.5	139.2	141.3	3355.9	7
157.6	156.3	158.2	153.9	154.8	150.5	150.2	157.4	158.1	156.7	143.4	134.4	3519	1
157.3	157.3	157.6	153.5	152.6	150	155.3	160.3	152.2	156.7	143.6	143.2	3543.6	2
154.8	156.3	159.5	152.2	158.9	144.2	145.7	156.5	150	135.9	139.7	144.4	3512.5	3
150.6	135.9	137.2	138.2	137.7	139.4	134.6	145.8	146.3	143.7	139.7	137.9	3383.8	4
153.2	150.2	160.7	157	147	134.6	134	157.9	148.2	138.8	142.9	143.5	3435.8	5
150.4	142.5	141.2	141.2	139.3	137.3	134.4	144.2	135.3	135.3	144.5	143.2	3327.7	6
135.1	134.6	137	135.5	150.2	148.2	147	153.4	148.2	142.3	143	133.7	3361.5	7
135	134.9	142.1	134.7	149.6	145.6	147.7	155.4	155.1	140.6	140.3	142.9	3364.6	1
155.6	156.6	153	160.4	160.6	149.5	158.8	154.6	158.7	142.5	140.6	141.8	3550.5	2
154.8	156.4	159.6	152.2	159	144.1	145.7	156.6	150	135.8	139.9	144.5	3513.6	3
160.7	152.7	152.7	152.9	158.3	157.2	149.5	156.5	156.5	159	139.2	140.9	3541.8	4
158.3	155.4	157.4	152.2	148.9	149.9	144.1	149.5	136.7	142.4	137	143.8	3407.2	5
149.4	148.2	149.4	144.4	135.3	149.5	155.1	144.6	154.6	135.5	137.4	137.2	3335.5	6
134.6	135.4	133.8	142	151.7	134.1	134	150.1	135.9	137.1	142.5	134.4	3273	7
151.6	151.6	136.1	134.9	157.8	134.3	135.1	152.7	135.1	137.2	150.3	157.2	3428.2	1
157	154.9	160.4	155.9	158.6	153.3	152.4	153	158.7	152.2	141.1	149	3599.5	2
158.3	157	154.9	155.7	159.7	152.8	154.3	156.8	154.7	156.4	142.8	149.9	3596	3
160.4	152.4	159.6	157.8	155.4	159	155.1	158.5	156.9	149.2	144.7	151.3	3630.3	4
155	155.9	153	155.8	160.6	159.4	158	155.2	158	156.4	140.8	155.5	3596.1	5
153.9	134.7	134.2	137.9	156.8	135.1	134.7	138	142.9	134.8	144.9	148.5	3392.2	6
138	139.6	137.4	136.5	139.3	155.9	139.3	143.1	157.7	135.6	149	153.3	3423	7
154.8	151.5	159.5	153.4	158.7	133.6	133.7	153.4	154.3	156.1	147.4	155.3	3562	1
156.3	156.7	157.2	157.8	153.3	134.2	160.9	156.2	142.6	139.8	148.2	154.4	3574.5	2
159.7	160.1	157.4	157.4	156.8	159	144.6	152	159.8	153.2	145.4	152.9	3631.4	3
159.7	153.9	154.9	156.4	157.8	134	134.2	153.2	144.6	138.9	146.5	151.9	3555.5	4
139.1	134.6	134.6	160.8	153.1	159	146.4	156	159.9	133.7	145.4	156.9	3517.9	5
135.9	134.3	134.4	133.4	135.9	157	134.3	140.6	136.2	135.7	152.6	148.8	3371.9	6
136.5	139.5	136.4	135.4	136	134.8	133.6	155.1	134.4	134.3	150.5	154.7	3389.9	7
154.6	158.7	158.5	154.6	158.3	157.8	160.2	160.3	153	158.8	142	148.5	3604.2	1
151.5	152.9	160.3	160.5	157.1	156.3	154.3	154	153	158.8	143.1	150.4	3602.8	2
160.6	155.7	152.9	153	154.9	156	134.6	154.2	155	158.9	145.4	150.1	3600.4	3
154.2	155.4	159.5	156.6	160.4	158.2	160	155.4	157.8	152.2	141	148.1	3610.9	4
155.9	160.2	159.1	153.4	158.1	152.4	134.1	153.3	146.8	155	147.1	148.9	3567.5	5
158.8	139.2	135.7	135	139.3	134.4	137	159.6	134.5	134.8	146.1	148.3	3429.2	6
137.5	139.1	138.6	136	134.3	135.7	136.1	135.1	159.2	133.9	146.4	152.7	3397.3	7
153.9	160.6	156.8	149	155.9	160.5	133.8	157.1	159.7	146.5	146.4	151.1	3579	1
152.2	152.2	153.2	134.2	159.6	155	151.2	159.9	158.6	140.1	144.1	153.6	3595.7	2
152.2	156	156	143	157.7	134.5	157.9	157.8	157	154	139	154.4	3594.5	3
158.1	159.6	160.2	159.4	157.7	136.4	144.9	158.7	160.7	136.9	145.5	152.8	3595.5	4
153.3	157.1	158.1	149	133.8	155.7	157.7	149	137.7	159.8	147.1	148.8	3589.4	5
135.5	134.9	134.9	139.3	153.8	152.1	135.1	134.6	136	134.7	147.1	148.8	3404.4	6
138.3	138.7	138.1	137.2	135	150.4	134.5	158.8	135.8	140.9	146.4	134.9	3421.1	7
159.3	160.4	156.5	157.3	133.8	160.7	156.8	153.8	154.7	135.1	151.8	156.7	3553.8	1
155.7	153.4	160.3	158.5	157.5	152.9	156.7	155.5	152.8	157.1	151.8	154.8	3616.9	2
139.4	141.1	153.3	134.5	142.8	139.3	150.4	133.6	139.1	135.9	152	151.7	3450.7	3
156.8	159.5	159.3	156.8	155.5	156.6	157.5	156.8	156.8	155.1	146.4	153.2	3684.6	4
154.4	160.3	158.4	153.8	156.8	159.5	156.3	154.6	153.3	135.8	148.7	152.2	3600.6	5
142.2	137.1	135.7	134.1	149.2	144.9	156.3	134.5	133.5	136.1	143.7	156.2	3437.6	6
140.9	140.2	139.2	137.6	135.2	144.1	135.6	154.2	134.9	137.2	144.2	156.6	3442.1	7
151.5	151.4	150.5	147.8	146	146.2	152	141.9	152.7	149.5	154.1	138.7	3468.1	1
143.1	156.7	156.7	135.1	139.3	142.9	141.5	154.8	136.1	146.7	135.5	140	3432.3	2
139.5	136.6	135.1	138.1	136.7	140.3	142.6	154.8	138.3	148.9	153	134.3	3397.5	3
141.3	143.6	144.1	144.9	137.6	138.3	146.7	137.4	141.6	150.1	137.5	141.9	3411.6	4
155.5	158.7	152.1	159.2	157.5	157.1	160.1	154.6	159.5	134.8	137.5	139.1	3557.4	5

13	14	15	16	17	18	19	20	21	22	23	24	SUM	DOW
158.8	149.8	145.7	151.1	150.2	155.9	150.2	158.6	145.8	153.3	139.6	141.6	3481.2	6
135.1	135.5	138.3	136.7	134.1	139.6	145	152.5	153.3	134.6	143.4	143.9	3373.1	7
139.6	135.3	138.3	137.5	140.7	143.1	143.5	135.3	136.4	148.4	136.3	141.1	3392.3	1
139	138.6	136.4	139.8	139.3	143.9	142.8	136.5	137.5	147.4	137.5	140.6	3395	2
136.5	136.9	137.5	137.5	137.1	139.7	142.6	136.7	140.8	146.3	135.7	140.4	3386	3
139.6	136.7	138.7	137.5	139.7	139.7	140.8	135.7	139.9	144.5	157.4	137.6	3407.7	4
138.6	141.2	142.3	145	146	150.7	146.8	137.5	138.8	156.1	135.2	138.2	3422.2	5
142.5	140.6	141.2	142.8	138.8	138.9	142.5	139.4	147.1	152.9	138.3	139.8	3406.3	6
146.1	142.6	144.7	142	151.4	147.6	146.1	140.8	145	145.3	154.7	142.7	3473	7
137	151.5	136	136.5	136.7	141.6	143.3	137.4	143.3	145.9	134.8	139.1	3383.9	1
136.6	136.6	158.3	134.5	140.3	144.3	145.3	133.9	140.4	148.4	137	140.4	3389.8	2
144.6	143.8	145.2	142.6	143	146.3	145.9	134.4	139.6	149.9	152.9	143.1	3463.2	3
141.6	139.3	136.8	137.2	137.2	139.8	140.4	135.1	143.2	149.8	153.4	142.3	3399.3	4
139.4	141.4	138.3	141.2	143	137.4	140.5	142.9	137.2	148.1	135.3	138.2	3403.8	5
143.7	142.1	141.5	140	137.4	137.2	139.7	142.1	139.1	150.7	135.6	137.6	3396.7	6
142	142.6	150.7	147.8	145.3	142.4	139.1	137.2	145	150.7	137.6	140.5	3417.7	7
157.7	143.9	134.1	134.4	139.1	145.4	136.7	134	136.8	147.6	153.5	135.2	3366.8	1
157.2	134	134.1	135.2	138.4	147.1	148.6	148.2	149.2	140.2	134.6	139.7	3366.9	2
158.4	152.4	158.3	137.4	136.1	140.4	145	136.6	136.4	141.6	152.3	143.6	3451.1	3
133.8	135.7	147.2	160.5	134.3	138.7	138	149.3	136.2	136.6	152.7	144.4	3408.4	4
134.4	135.4	135.5	137.6	134.7	140.1	143.6	139.7	143.8	145.6	153.4	142.5	3392.3	5
146	144.6	142.4	145.3	143.1	141.9	145.3	140.3	144.8	145.5	155.4	143.7	3424.6	6
141	139.1	138.4	137.6	136.5	147.7	147.7	135.7	139.7	144.6	155.5	135.3	3382.4	7
153.4	155.3	135.3	135.9	138.5	143.9	144.4	159	135.3	147	151.3	143.9	3439.3	1
134.9	134.3	157.1	151.6	136.3	142	141.6	157.1	135	145.9	152.6	143.9	3418.7	2
135.9	155.2	135.6	136.4	140.9	140.1	144.3	137.4	138.7	143	154.1	134	3367.8	3
134.4	137.4	135.4	152.4	136.3	139.8	144.1	137.2	137.9	141.6	155.3	135.6	3353.6	4
134.4	135.8	134.8	136.8	135.1	140.4	143.8	157.8	140.4	143.3	150.6	141.9	3350.3	5
147	144.2	143	143.2	141.6	141.6	140.7	134.3	143.3	145.5	152.6	142.9	3424.6	6
138.1	147.4	138.2	137.7	146.4	142.3	141.2	157.8	143.3	149.3	156	143.9	3435.5	7
152.7	160.5	152.8	154.6	157.5	154.4	160.5	160.5	153.4	144.2	148.9	141.5	3543	1
154.7	158.5	159.7	152.8	156.4	137.9	139.8	154.8	139.6	137.8	151.9	142.9	3537.8	2
159.4	153.6	154.5	157.6	141.4	157.3	133.8	156.6	136	142.6	157.1	139.9	3494.8	3
157.6	160.4	145.3	141.4	139.5	136.6	137.9	152.5	149.5	147.5	151.9	144.3	3455.8	4
149.5	136.1	133.5	157.3	136.3	141.8	135.8	139.6	139.1	146.9	152.7	143.5	3377.3	5
147.7	144.7	145.3	142.5	138.7	138.9	140.9	138.9	145.9	149.5	153.1	136.1	3397.4	6
146.5	144.9	140.6	141.8	138.7	147.3	144.8	133.8	144.4	150.9	133.7	136.2	3379.4	7
141.8	134.4	134.9	135.1	135.7	139.2	138.5	152	139.7	138.6	152	144.4	3338.1	1
134.9	149.5	136.6	139	140.9	145.5	146.4	135.7	136.3	144.3	155.3	143.6	3387.2	2
152.3	153.4	135.7	135.8	138.3	143.6	145.8	134.5	134.4	143.5	154.9	139.6	3368.5	3
134.7	159	134.3	160.3	136.3	146.6	136	138.5	138.2	143.8	152.7	135.6	3394.4	4
137	136.6	135.8	136.7	136.4	139.9	134	151.9	146.4	149	150.8	139.3	3380.8	5
146.7	144.7	144.7	146.3	146.2	137.2	140.8	141.6	141.9	143.8	136.3	136.5	3410.3	6
150.1	146.4	144.5	141.6	139.7	139.5	138.1	137.6	146.9	145.6	152.9	138.4	3422.2	7
152.7	134.3	138	135.4	140.9	143.9	143.8	155.9	135.5	146.5	136.1	137.1	3395.8	1
154	143.6	137	142.3	143.8	151	136.6	151.7	141.9	151.4	152.8	140.8	3398.6	2
153	135	151.7	136.9	138.2	141.5	141.5	159.2	139.5	148.8	136	136.9	3369.3	3
140.1	156.4	136.2	136.2	138.4	146.9	144.1	158.6	135.5	144.9	134.1	135.7	3377.8	4
134.4	156.4	136.1	147.5	137.1	145.1	149.8	152.7	139.2	142.8	150	140.6	3422.1	5
141.4	142.2	138.2	137.8	137.7	141.9	141.5	146.7	148.4	151.8	154.4	137.4	3402.5	6
147.2	149.4	149.3	148.4	145.5	141.7	145.6	139.9	143.6	148.7	145.4	142.6	3459.2	7
147.2	145.5	146.4	147.3	145.7	143.8	140.1	134.4	147.4	151.5	135.7	135.5	3417.8	1
137.6	134.8	134.1	136.1	140.9	146.7	139.5	156.2	136.6	148.2	136.7	136.9	3348.3	2
140.1	135.8	134.1	134	139.2	141.6	140.7	134	138.8	142.4	153.5	139.4	3376.3	3
137.3	156.9	142.6	134.7	139.5	142.2	141.1	159.9	137.3	147.2	133.9	136.5	3389.3	4
151.6	146.5	155	144.5	137.9	147.4	137.8	136.1	139.2	149.9	155.6	143	3393.1	5
146.5	143.8	144.2	144.4	147.4	137.8	144.7	139.6	141.1	143.4	134.6	133.7	3387	6
149.3	138.4	145.5	146.1	146.7	150.9	138.5	137.3	143.4	145.1	134.8	137.4	3398.6	7
147.1	145.5	146.3	147.2	145.6	143.7	140	134	147.3	151.4	135.6	135.4	3416	1
134.6	133.7	137.8	139.1	141.8	149.7	141.8	133.4	142.9	142.2	153.1	139.7	3397.4	2
137.1	135.2	153.5	153.5	135.3	142.6	139	158.8	142.7	144	152.9	138.9	3396.9	3
135.7	139.7	136.7	135.5	140.3	138	144.3	134.7	141.3	150.6	137.5	139.4	3344.3	4
135.1	149.7	137	135.7	138.3	147.2	142	136.9	137.5	151	133.7	141.3	3370	5
143	142.4	141.9	142.6	142.2	145.9	144.4	139	142.9	144.3	138.5	144.3	3408.7	6
149.2	147.3	145.8	145.6	142.9	144.1	147.2	141.5	139.9	146.5	153.4	139.1	3434.6	7

13	14	15	16	17	18	19	20	21	22	23	24	SUM	DOW
135.5	137.3	140.3	143.6	148.4	141.1	143.6	140.6	146.8	143.1	153.5	137.9	3405.6	1
136.8	137.8	137.4	135.3	140.8	145.5	134.9	158.2	137	145.5	133.8	135.3	3334.7	2
140	135.3	137.2	140.6	146.6	139.9	144.5	153	141.9	153.1	135.6	137.8	3408.8	3
138.6	139.8	142.8	142.7	147	140.4	135	135.3	139.6	147.5	153.5	138.9	3380.6	4
136.8	134.9	139.8	142	138	144	142.5	143.3	148.4	151.9	138.2	136.8	3387.2	5
148.9	146.6	148.7	147.6	146.5	145.5	142.9	147.6	153.1	148.9	133.9	136.5	3456.4	6
148.1	146.4	146.5	146.7	144	142.3	142.5	147.7	143.2	148.3	136.4	144.5	3454.1	7
146.8	143	143.5	144.6	146.6	140.1	137.9	136.5	145.4	149.2	133.4	143	3433.3	1
143.3	138.6	138.7	137.4	142.3	137.4	136.9	135.8	146.8	147.9	147.7	142	3415.6	2
142.3	145.3	142.2	141.3	144.5	147	135.4	147.5	143.3	151.9	157.5	140.9	3425	3
145.6	143	143.7	143	145.1	139.2	135.7	137.3	142.1	143.9	152.7	137.2	3400.8	4
136.7	137.6	140.9	144.7	150.5	138.5	139.4	139.4	145.4	148.6	136.8	134.9	3386.3	5
144.5	146.2	145.3	142.3	141.2	141.8	158.4	157.5	147.7	150.7	135.6	134.6	3439.5	6
141.9	138.8	138.5	140.7	139.2	137.7	135.4	136.7	145.4	143.6	154.5	138.9	3366.5	7
138.7	136.5	139.8	137.2	140.5	144	135.5	134.9	140.2	152.9	136.4	136.9	3400.3	1
138.9	138.8	138.4	140.6	141.4	145.8	138	138.8	147.5	145.8	157.4	140.6	3402.5	2
136.7	141.6	140.5	142.8	145.7	148.4	137.3	136.2	141.7	144.4	153.4	139.1	3406.4	3
138.5	140.3	143.8	148.3	144.1	144.3	148.3	137.4	139.1	148.6	153.6	136.8	3408.4	4
142.8	138.5	136.8	140.1	142.8	142.8	141.4	139.1	152.6	154.2	156.4	137.2	3386.5	5
139.5	137.4	142.6	141.1	143.1	143.8	138.8	139.5	147.4	155.8	138	137.9	3395.1	6
146.7	145.3	148.3	145.6	145	146.3	139.1	139	147.5	153	134	142	3426.5	7
138.1	134.7	138.3	142.7	136.4	146.1	133.8	136	142.5	147	135.6	144.5	3352.1	1
145.2	138	138.3	140.8	138.6	141.9	136.4	137.5	145.5	149.2	147.7	141.5	3390.5	2
143.8	136.5	146.5	138.8	140.8	143.9	152.2	156.1	143.3	144.6	156.4	141.3	3427.3	3
139.8	138.8	144.2	142.1	144.9	143.1	155.7	134	138.2	150.7	152.7	144.6	3394.4	4
139.9	139.7	135.1	133.9	137	144.9	152.8	137.9	148.5	150.9	156.9	141.2	3421.5	5
151	148.6	146.6	145.6	141.1	139.1	135.5	140.1	152.6	147.5	134.1	140.2	3403.9	6
147.3	144.9	143.7	152.9	147.1	142.3	147.2	147.8	144.2	147.8	135.9	144.5	3434.5	7
141.1	138.4	135.6	136.5	140.5	138.8	151	136.9	141.3	143.4	135.8	142.8	3372.4	1
136.7	154.4	158.3	154.4	136	138.3	134.5	137.6	147.1	144.7	156.8	142.8	3428.3	2
142.7	143.5	142.3	142.5	143.4	145.2	135.1	139.7	141.4	147	134.9	143.6	3372.2	3
146.1	143	143.2	142	145	146.5	155.9	137.2	148.2	148	138.2	143.9	3424.9	4
145.7	142	139.4	137.2	140.7	139.6	135.4	143.5	152.7	155.1	150.2	141.9	3423.9	5
143.7	152	150.6	148.4	144.5	146.2	140.8	138.2	145.5	148.3	135.6	142	3454.4	6
147.9	150.4	140.2	137.5	147.3	142	151	140	151.3	148.2	155.7	140.6	3465.7	7
134.5	135.6	135	135	140.4	148.8	155.3	159.5	141.7	143.3	155.5	140.9	3428.1	1
139.5	139.7	141.2	142.7	141.7	139.3	154.7	137.6	150.3	149.4	134.1	142.3	3390.4	2
134.2	138.4	140	141.3	141.3	142.2	157.2	158.4	143.9	142.5	155.2	141.5	3398.6	3
135.7	135.9	151.3	157.5	137.2	151.4	135	158.7	147.3	151.3	153.4	137.8	3417.3	4
134.9	136.8	134.6	135	139.9	144.9	135.2	141.4	150	147.6	153.4	137.6	3346.2	5
146	144.2	143.4	143.5	141.2	138	143.4	141.2	143.6	156.9	142.9	143.3	3436.7	6
157.4	134.7	135	156.2	149.7	148.6	136.8	147.1	145.9	151.1	142.5	137	3464.2	7
143.9	141	141.7	143.1	137.5	146.4	135.3	137.2	150.9	149.8	136.4	134.2	3386.2	1
146.7	142.7	140	135.6	137.1	141.1	141.4	141.8	150.3	147.3	136	134.9	3370	2
145.9	138.9	152.5	147.8	135.6	141.8	134.3	139.5	151.9	149.2	136	134.4	3383.8	3
141.3	143.9	146.2	145	146.6	147.7	135.9	145.1	143.4	148.3	155.5	143.2	3423.1	4
149	146	148.9	146.9	144.2	139.1	147.5	144	149.4	157.1	139.8	142.7	3390.5	5
151.5	152.3	154.5	134.2	145.5	149.7	142.2	155	142.3	153.9	136	136.6	3426.4	6
151.6	150.2	149.7	148.7	151.9	143.5	140.3	151	135	155.4	141.8	144	3398	7
135.1	145.4	158.1	138.6	135.5	138.7	145.8	146.2	147.8	151.6	149.8	155.1	3455.9	1
140	140	140.2	141.6	144.1	140.2	154.9	137.1	137.4	143.5	151.9	156.9	3448.1	2
145.2	142.8	143.4	141.8	143.2	142.7	160.1	154.6	138.1	142.6	150.9	139.2	3469.6	3
137.1	145.4	145.4	138.2	138.8	135.5	157.4	135.3	140.9	144.4	150	139.6	3417.5	4
137.8	135.6	144.9	144.8	136.9	137.1	157.4	142.8	146.8	147	147.6	143	3431.4	5
141.3	142.9	143	142.4	151.7	143.7	139.7	140.3	145	153.8	152.1	140.2	3426.9	6
145.2	144.9	145.8	146	145	148.5	138.7	136.1	151.5	153	155.3	139.1	3469.5	7
138.7	137.8	137.4	138	139.5	136.7	157.4	137.7	139.8	144	151.1	137.9	3407.1	1
145.7	145.4	136.9	136.5	135.9	140.1	153.6	158.8	138.3	142.2	149.8	139.8	3439.5	2
137.8	138.7	137	137.2	139.2	135.9	157.1	135.6	144.6	145.1	151.2	138.5	3401.7	3
141.6	141.1	139.6	140	141.8	138.7	154.9	142.7	148.2	146.8	153	140.6	3419.5	4
147.7	149.5	148.7	145.4	142.8	138.8	134.8	146.5	148.3	147.6	152	134.7	3434.5	5
146	151.4	143.4	151.2	147.1	141.1	136.4	136.3	150.8	152	139.3	135.3	3461.1	6
146.8	144.7	143.8	143.9	152	139.8	134.5	135.4	141.3	148.4	134	140.2	3425.7	7
140.9	139.8	137.7	138.8	140	138.5	157.8	135.2	135.4	136.9	148.2	142.9	3405.6	1
141.5	143	142.7	135.6	138	136.1	151.5	133.8	142.1	144.7	152.2	141.3	3414.9	2

13	14	15	16	17	18	19	20	21	22	23	24	SUM	DOW
143.2	145.8	140	138.9	142.7	137.6	160.1	136.6	145	143.5	155.1	141.8	3452.3	3
146.4	135.2	138.9	139.2	144.3	147.9	146.2	142.7	154.4	149.1	155.8	141	3448.7	4
140.9	140.5	137.4	136.6	139.8	134.1	160.5	140	148.5	156.6	156.6	142.4	3414.1	5
146	151.4	143.4	151.2	147.1	141.1	136.4	136.3	150.8	152	139.3	135.3	3461.1	6
146.8	144.7	143.8	143.9	152	139.8	134.5	135.4	141.3	148.4	134	140.2	3425.7	7
140.6	144.3	142.8	145.1	143.2	136.9	157.4	156.3	140	145.2	155.5	140.1	3480.9	1
138.5	138.9	136.7	140.5	141.3	154.9	153.2	153.9	141.9	139	150.7	154.5	3435.3	2
142.3	143.8	145.5	144	141.6	141.4	158.4	159.7	146.5	134.8	151	156.2	3459.4	3
146.5	135.5	138.9	139.2	144.3	147.8	146.2	142.6	154.3	149.1	155.7	141	3449.3	4
140.8	140.4	137.5	136.8	139.7	134.4	160.4	140	148.4	156.6	156.3	142.5	3413.9	5
144	144.2	146.4	139	139.3	155.4	160.1	145.9	147.9	149.6	135.8	134.1	3444.9	6
148.1	150	152.1	150.2	144.8	137.2	135.6	149	152.2	149.5	153	142.4	3479	7
150.5	145.5	149	152.6	147.5	142.3	144.4	137.1	148.6	151.2	135.5	141.8	3470.7	1
144.6	141.8	152.7	148.7	150.2	141.1	135.3	145.7	151.6	144.4	136.7	136.7	3452.5	2
150.3	145.2	140.6	140.6	142.8	145.1	154.9	141.5	146.6	150.6	136.8	136.6	3449	3
140.2	142	138.9	139	140.5	144.3	155.7	137.4	151.5	148.3	157.1	143.5	3423.6	4
145.7	141.8	138.7	137.3	139.7	145.8	134.4	137.9	148.4	148.3	137.8	141.6	3387.3	5
149.8	146.3	146	145.9	144.3	146.6	136.8	138	143.4	155.3	157	140.9	3448.9	6
139.1	135.8	134.7	157.2	151.9	144.3	136.1	143.8	155.5	156.1	139	140.1	3436	7
148.1	146.1	146.9	150.3	152.4	142.8	158.6	140.2	150.9	147.2	136.3	135.5	3486.2	1
152.7	152.5	152.5	142.5	144	149.9	144.9	142.5	152.1	153.3	137.4	134.5	3476	2
152	146.9	146.7	150.5	149.1	145.9	139.2	141.4	151.1	141.5	134.6	139.1	3432.5	3
143.2	149.1	149.2	149.9	150.9	143.1	153.5	134.3	144.7	151	147.7	142.5	3451.3	4
151.8	152.5	150.8	149.9	149.3	143.2	158	137.1	145.3	157.2	155.2	141.7	3484.5	5
157.1	134.9	143.9	157.4	153	143.6	144	146.9	147.6	149.8	134.4	144.2	3469.6	6
153.1	153.5	151.9	149.4	156.1	141.9	136.7	141.4	151.2	150.1	139	135.8	3462.5	7
147	145.8	144.2	144.8	144.3	148.8	135.6	135.3	148.8	151.9	142.1	144.5	3447.1	1
148.7	150.5	147.9	151.7	150.9	145.7	139.5	150.1	152.4	153.1	135.2	136	3479.1	2
152.4	149.7	145.5	147	148	151	139	143.9	151.9	156	136.3	135.2	3476.8	3
152.3	151.9	149.7	148.4	148.1	151.3	137.6	143.8	150.4	153.4	134.7	133.6	3455.3	4
150.2	148.7	148.4	149.2	148.4	153	144	146.9	145.9	152	143.9	137.8	3468.7	5
149.7	154.2	152.6	151.3	147.3	149.5	141.7	151.1	155	150.6	137.4	144.5	3504.1	6
134.5	134.6	156.6	155.7	148.4	142.2	136.9	136.7	141	145.7	152.9	140	3408.1	7
142.2	152.1	149.1	150.5	152.1	145.3	147.1	136.7	137.4	151	154.7	133.6	3464.9	1
155.2	155.2	137.8	134.5	155.6	156.3	149.4	144.3	141.4	141.2	137.7	138.9	3461.9	2
145.9	145.4	141.2	140.4	139.7	141.6	156.2	153.8	143.3	148.9	136.4	138.6	3427.5	3
145	141.2	142.9	146.1	144	142.7	154	140.5	144.2	149.8	154.8	141.6	3432.3	4
142.5	142.2	142.2	143.9	145.3	145.5	136.7	145.5	142.1	147.9	138.2	138.7	3432.1	5
156	156.7	157.4	152.7	144.2	147.8	139.3	148.8	155.8	149.7	156.9	138.9	3532.7	6
155.2	155.2	137.8	134.5	155.6	156.3	149.4	144.3	141.4	141.2	137.7	138.9	3461.9	7
154.3	156	154.3	151.7	146.2	142.9	144.1	155.3	143.5	154.2	141.3	139.1	3503.6	1

13	14	15	16	17	18	19	20	21	22	23	24	SUM	DOW
13	14	15	16	17	18	19	20	21	22	23	24		
53,229	53,064	52,954	52,811	52,712	52,469	52,859	53,104	52,978	53,577	52,944	51,545		
365	365	365	365	365	365	365	365	365	365	365	365		
									53,577	52,944	51,545		
									365	365	365		
53,229	53,064	52,954	52,811	52,712	14,951	14,803	14,921	15,088					
365	365	365	365	365	104	104	104	104					
					37,518	38,055	38,183	37,890					
					261	261	261	261					
0.00	0.00	0.00	0.00	0.00	0.00	0.00	0.00	0.00	0.00	0.00	0.00		
0	0	0	0	0	0	0	0	0	0	0	0		

2008 Running Cost
Is this a leap year? y

Month	Day	Year	1	2	3	4	5	6	7	8	9	10	11	12
1	1	2008	111.6	98.5	98.1	101.9	99.5	99.2	100.7	98.4	109.4	105.3	100.1	100.1
1	2	2008	100.1	103.6	97.9	98.8	96.4	100.8	111.6	108.4	105.1	103.6	99.5	99.8
1	3	2008	101.1	103.5	98.2	97.4	102.8	98.5	109	106.9	102.1	97.2	102.8	103.1
1	4	2008	96	102.7	96.7	97	103.4	98.9	95.9	105.1	100.7	98.3	97	97.1
1	5	2008	111.6	98.5	98.1	101.9	99.5	99.2	100.7	98.4	109.4	105.3	100.1	100.1
1	6	2008	100.7	100.1	103.9	97.9	100.3	103	102.3	113.3	111.3	102.1	102	104.3
1	7	2008	100	97.9	98	97	102.5	99.4	108.5	104.8	107.8	102.6	101.4	103
1	8	2008	99	96.3	100.1	99.3	99.5	97	110.3	108.1	104.1	102.6	99.6	99
1	9	2008	100.1	103.6	97.9	98.8	96.4	100.8	111.6	108.4	105.1	103.6	99.5	99.8
1	10	2008	101.1	103.5	98.2	97.4	102.8	98.5	109	106.9	102.1	97.2	102.6	102.9
1	11	2008	96	102.7	96.7	97	103.4	98.9	95.9	105.1	100.7	98.3	97	97.1
1	12	2008	102.9	102	97	98.3	102.8	96.2	97.6	111.4	110.4	107.3	104.3	105.5
1	13	2008	102.2	100.5	102.4	103.6	101.2	97.1	100.5	100.5	109.3	104.1	105.2	104.5
1	14	2008	101.8	97.5	99.3	100.2	97.9	99.5	108.8	105.9	102.3	100.7	99.3	100.7
1	15	2008	100.6	96.7	99.2	99.1	102.8	100.5	108.8	107.8	104.1	103.2	99.7	99.7
1	16	2008	103.7	99.4	100.7	101.1	97.4	102.2	110.9	109.7	109.3	106.1	104	105
1	17	2008	101.8	97.8	100.6	99.6	96.3	98.6	109	112	100.6	98.9	98.2	99.2
1	18	2008	96.7	102.7	101.1	103.3	99.2	103.3	111.3	106.8	106.5	102.5	101.1	102.2
1	19	2008	100.2	96.3	98.4	99.5	103.9	97	99	101.5	102.5	98.5	98.2	97.6
1	20	2008	98.2	99.5	98.5	98.9	96.7	100	98.5	96.3	106.8	102.1	97.2	97.3
1	21	2008	97.5	100.4	96.3	96	101.7	100.9	98.9	106.3	99.3	110.9	109	96
1	22	2008	99.4	103.9	99	99.2	103.8	101.3	106.6	102.8	99.6	97.6	96.9	98.6
1	23	2008	96.4	103.8	97.2	97.3	101.2	96.5	111.7	108.5	105.9	100.9	100	99.7
1	24	2008	98.7	101.2	103.6	96.1	100.4	95.9	109.5	106.7	103.3	100.4	101	99.8
1	25	2008	98.7	100.8	103.7	96.1	100	97.3	96.3	109.3	101.8	98	110.9	96.3
1	26	2008	96.4	96.3	98.7	99.1	97.1	99.4	97.9	98.3	105.9	102.1	100.5	108.7
1	27	2008	100.5	96.8	99.1	100	97.5	100	99.3	98.6	108.3	104	107.3	106.2
1	28	2008	96.4	98	97	96.6	101.8	98.2	112.4	111.2	105.8	101.9	97.7	98
1	29	2008	102.7	101.3	96.4	96.3	102	98.5	111.3	111.4	105.8	101	100.3	98.9
1	30	2008	96.8	103.4	96.9	98.1	102.8	99.8	113	112.3	107.1	103.2	98.1	98.1
1	31	2008	103.4	101.4	103.9	98	100.1	96.6	111.9	109.6	104.3	104.7	102.7	99.8
2	1	2008	103	98.4	100.4	99.9	101.1	102.5	100.4	110.5	111.7	105.1	100.4	98.4
2	2	2008	103.2	99	101	99.2	99.9	97.3	99.5	98.1	109.8	111	106.4	104.5
2	3	2008	96.2	100	98.3	97.9	97.9	98.7	109.3	105.8	104.5	103.3	109.1	104.2
2	4	2008	96.4	100	97.8	101	100.3	101.3	98.9	109	111.1	107.1	101.8	99.2
2	5	2008	102.8	98	100.9	100.2	100.2	102.2	99.6	96.6	111.8	104.4	101.6	101.5
2	6	2008	99.2	99.9	95.5	94.8	98.8	102.8	100	109.3	105.8	105.3	102.1	102.1
2	7	2008	99.3	97.8	95.1	94.9	97.6	102.9	101.2	111.1	108.2	107.5	104	104.9
2	8	2008	99.7	98.5	96	95	97.6	103.4	100.3	108.8	104.6	102.6	107.8	107.6
2	9	2008	96.8	100.2	97.8	97.8	98.8	97.7	96.7	103.9	112	106.6	103.6	101.9
2	10	2008	102.4	99.6	99.6	97.6	97.4	98.7	102.1	101.8	111.5	107.1	105.5	108.1
2	11	2008	101.6	99.1	101.1	99.2	100.7	100.9	98.9	96	107.1	101.8	104.6	100.7
2	12	2008	102.8	97.7	99.6	100.6	99.5	100.4	99.9	104.2	106.3	105.7	100.9	98.7
2	13	2008	101.6	98	100.2	101	100.2	100.8	98.2	108.9	111.7	101.3	105.6	99.9
2	14	2008	97.5	98.9	100.5	100.8	99.5	100.9	99.6	96.5	109.1	104.5	100.7	102.2
2	15	2008	99.2	99	100.2	98.3	99.6	102.5	101.2	110.5	112.1	102.2	108.5	104.1
2	16	2008	96.1	100.1	97.8	96.5	97.4	99.1	100.3	98.7	106.7	104.8	110.1	110.4
2	17	2008	96.4	100.9	97.4	94.9	95	100.3	102.9	101.6	106.7	111.8	108.3	108.2
2	18	2008	100.1	97.6	94.9	94.9	97.6	96	102.8	101.8	108.6	107.5	104.6	105.3
2	19	2008	99.5	97.6	95.1	95.1	97.6	103.9	103.9	111.3	105.1	103.1	103.3	104.8
2	20	2008	96.3	100.7	95	95	97.6	100	102.9	112.1	108.5	106.4	103.6	101.5
2	21	2008	97.8	100.7	97.8	94.9	97.8	103.8	99.8	111.7	105.7	105.3	108.3	106.7
2	22	2008	97.6	100.1	98.3	97.8	100.7	103.3	101.4	110.8	105.4	104	108.7	107.8
2	23	2008	101.6	99.1	100.2	97.8	97.7	99	99.4	96.6	95.9	112.6	109.9	111.1
2	24	2008	98.2	100.4	97.4	95	96.5	100	103.1	102.8	98.7	112.9	109.2	108.8
2	25	2008	98	99.6	95	95	94.9	98.5	97.9	98	109.7	111.9	108	109.3
2	26	2008	98.5	98.5	96	95.1	97.8	100	99.6	98	109.1	105.8	102.3	101.9
2	27	2008	96.3	100.4	97.7	97.7	99.6	102.8	101.9	111.8	104.8	100.8	104.4	105.2
2	28	2008	96.2	99.9	98.5	98	101	101	97.9	110.5	109.4	101.7	102.4	101.8
2	29	2008	99.2	99.6	98.5	97.6	100.2	101.7	99.8	110.2	108.9	105.6	102.3	101.5
3	1	2008	100.6	97.5	97.6	94.9	97.8	103.8	97.2	97.5	106.2	102.8	105.3	100.9
3	2	2008	100.7	97.6	97.8	95.2	100.2	103.4	101.9	100.5	111.3	109.1	103.1	102.5
3	3	2008	96.7	99.4	97.8	94.9	100.4	96.4	96.1	110	100.9	106.5	103.1	103.6
3	4	2008	98.5	100.5	95.1	95.1	94.9	98.5	108.7	110	109.8	107.3	106.6	105
3	5	2008	103.7	100.4	94.7	94.5	100.2	98.2	111.3	112.7	108.6	106.3	106	106.6

2008 Running Cost
Is this a leap year? y

Month	Day	Year	1	2	3	4	5	6	7	8	9	10	11	12
3	6	2008	103.1	101.2	97.9	95.2	98.8	103.8	112.5	111	107	108.2	104	102.9
3	7	2008	99.3	98.6	95.1	94.9	97.8	96.2	111.2	111.6	107.8	106.3	104.1	103.2
3	8	2008	99.4	97.2	101.2	97.8	100.3	100.1	96.3	105.5	111.4	108.1	105.5	106.3
3	9	2008	97.9	100	99.9	97.8	100.2	103.1	102.9	103.2	110.7	107.7	104.8	104.7
3	10	2008	101.9	98.5	98.1	95.1	100	103.2	108.8	107.4	101.5	100	98	97.7
3	11	2008	103.6	102.4	97.6	99.7	96.2	99.9	113.1	109.9	102.6	104.6	110.8	111.2
3	12	2008	97.4	103.4	101.3	103.1	101.1	96.3	108.4	107	103.7	97.6	98.4	98.5
3	13	2008	100.7	98.2	97.7	96.1	99.5	103.5	108.4	106.4	105.1	105.9	106.9	108.5
3	14	2008	97.5	96.5	73	1	95.1	99.1	111.1	110.8	108.2	102.7	108.1	108.4
3	15	2008	103.5	100.5	97.9	94.2	97.8	100.8	101.6	98.4	108.3	104.6	101.7	101.2
3	16	2008	99.1	95	1	1	45.8	99.6	100.6	99.3	101.9	106.6	105.3	105.5
3	17	2008	99.6	0	0	0	92.2	100.5	102.7	103.9	103.3	110.3	111.6	109.9
3	18	2008	101.1	92.2	0	0	94.9	99.4	101.4	101.1	110.8	110.4	110	108.8
3	19	2008	95	0	0	0	45.3	102.7	96.8	97	97	107.8	106.5	99.9
3	20	2008	100.6	94.9	0	0	94	99.4	103.4	103.3	96.4	108.8	114.8	114.3
3	21	2008	97.9	97.7	45.3	0	94.9	100.6	103.9	100.2	109.8	111.6	109.3	109.4
3	22	2008	102.9	99.4	95.5	95.1	95.5	99.2	101.8	97.6	96.4	109.1	109.7	108.8
3	23	2008	102.3	100.7	94.9	94.9	98.3	97.6	102.1	99.5	99.1	106.5	109.2	110.8
3	24	2008	103.2	99.5	92.3	95.3	100.2	98.1	97.4	107.8	104.1	103.5	100.6	101.3
3	25	2008	99.3	96.8	100.9	97.1	100.4	103.2	96.4	112.8	102.4	100.1	96.8	97.9
3	26	2008	100	102.7	98.6	99.9	96.1	102.6	98.6	112.3	101.3	99.3	97.5	96.1
3	27	2008	98.7	96.1	101.7	101.6	102.5	99.7	113	110.2	107.2	104.6	108.9	110.5
3	28	2008	99.8	100.2	103.7	97.2	100.2	101.9	96.1	112.6	101	96.8	96.8	97
3	29	2008	102.1	100.4	100.8	96.9	103.2	98.4	100.3	97.5	106.7	101.9	108.5	101.2
3	30	2008	102.9	100.4	97.6	94.5	97.7	100	103.2	101.4	110.8	110.2	107.6	109.2
3	31	2008	97.2	94.9	0	45.3	101	99.2	97.8	111.7	104.7	104.5	102.6	101.7
4	1	2008	96.5	99.9	93.6	97.8	99.2	99.7	96.3	106.6	106.3	103.4	102	103.9
4	2	2008	101.6	100.6	97.4	95	98.9	99.6	97.7	112.8	104.7	104.3	103.3	99.8
4	3	2008	97.4	100.6	97.4	94.9	99	99.3	113	98.6	106.3	106.6	102.5	104.4
4	4	2008	96.9	100.6	94.9	95	100.4	98.9	99.5	110	104.7	106	104.4	105.6
4	5	2008	99.7	98.5	94.9	94.9	99.1	101.6	98.2	96	107.9	104.8	105.5	106.6
4	6	2008	98.9	98.5	95.2	95.3	101	97	98.9	101.4	112.3	104.8	112.1	111.9
4	7	2008	99.8	97.7	96.2	96.2	98.7	111.7	109.2	103.3	110.8	109.6	114.2	111.4
4	8	2008	98.9	102.3	97.6	100.8	100.3	112.2	105.2	106.5	98.8	111	112.7	112.3
4	9	2008	100.3	102.4	96.8	103.7	97.5	112	104.6	101.2	109.1	110.9	114.2	112.7
4	10	2008	97.7	99.2	102.5	102.4	96.7	110.4	110.5	106.4	97.2	110.4	111.3	112.3
4	11	2008	97.3	98.9	102.6	101.9	96.7	112.9	104.9	98.9	114.3	112.9	113.8	113.8
4	12	2008	111.5	97.2	99.2	99.5	98.4	112.9	104.5	102	97.5	103.8	103.8	111.8
4	13	2008	111.4	99.6	102	102	99.2	96.8	97.7	107.2	101.2	98.3	96.4	97.3
4	14	2008	96.5	100.4	101	98.3	97.4	99.2	110	109.2	107.8	100.2	98.1	97
4	15	2008	103.5	98.2	98.8	100.9	97.3	102.6	98.4	112.3	107	99.2	99.9	99.3
4	16	2008	103.8	98.8	100.7	100.9	97.8	97.6	97.9	111.7	106.4	104.6	100.9	99
4	17	2008	101.6	98.8	99.6	97.8	99.4	98.6	96.1	100.9	106.4	102.5	97.7	97.3
4	18	2008	101.8	96.6	100.2	100.6	97.5	98	103	110.9	105.3	103.3	100	99.8
4	19	2008	99.6	96.5	100.6	100.7	99.4	102.4	101.2	97.3	108.2	104.1	107.3	107.4
4	20	2008	100.6	97	100.5	101	99.3	103.6	103.2	102.7	112.5	110.9	106.9	105.3
4	21	2008	102.4	97.6	100.8	101	96.1	96.8	97.2	112.2	106.7	105	100.8	98.9
4	22	2008	99.5	100.2	97.7	97.9	102.4	99.4	99.9	109.1	105	107.9	102.6	101.4
4	23	2008	98.4	100.7	97.9	97.8	97.2	99.9	98.3	96.5	108.9	101.1	104.6	103.1
4	24	2008	96.6	100.5	97.8	97.8	99.8	100.1	98.3	108.9	110.9	101.4	105.4	103.9
4	25	2008	103.8	98.8	100.6	97.8	99.1	100.5	99.1	108.3	110.1	105.1	106.4	105.1
4	26	2008	103	100.2	97.9	97.9	100.6	96.4	103.2	97.4	98.7	111.8	108	107.9
4	27	2008	98.4	100.2	97	95.1	100.2	97.4	99	100.6	100.8	112.3	106	104.6
4	28	2008	97.1	100.9	94.9	97.8	98.8	99.3	99.6	109	112.1	101.6	106.7	104.8
4	29	2008	97.5	97.8	95.3	96	99.7	99	99.3	108.4	111.1	108.5	104.6	105.2
4	30	2008	97.5	100.7	99.9	98.3	100	99.4	99.1	96.6	112.3	101.5	104.5	101.1
5	1	2008	102.6	98.4	100.4	97.8	100	101	104	110.1	112.2	105	104.2	104.5
5	2	2008	96.8	100	99.9	97.4	100.6	101.2	100.2	110	110.6	102.8	101.2	105.9
5	3	2008	102.8	98.3	100.4	97.8	101	96.3	96.3	102.7	97.9	112.6	109.6	108.5
5	4	2008	103.7	98.9	101.1	97.8	98	98.4	100.9	100.4	113.2	111.3	106.5	104.7
5	5	2008	102.1	99.2	102.2	103.5	101.5	100.7	111.4	108	108.8	105.3	100.1	98.5
5	6	2008	101.9	97.6	100.8	101.8	98.2	98.2	98.3	107.1	107.9	105.9	99.1	101.1
5	7	2008	100.7	95.9	98.1	99	96.3	96.2	97.3	106.3	105.1	102	96.2	110.8
5	8	2008	100.2	102.1	97	98.1	97.3	96	97.3	111.6	103.9	100.6	96.3	113.6
5	9	2008	98	103	96.1	97.3	100.5	100.9	97	110.9	102.1	101.5	112.2	114.2

2008 Running Cost
Is this a leap year? y

Month	Day	Year	1	2	3	4	5	6	7	8	9	10	11	12
5	10	2008	97.5	102.1	96.5	97	96.2	100.2	100.9	97.8	106.5	104.1	98.8	99.1
5	11	2008	99.1	98.9	97.9	100.7	97.1	102.6	97	96.4	107.3	105.1	108.5	107.1
5	12	2008	100.3	103.5	97.1	97.9	96.3	96.1	97	112.6	104.2	100.2	102.6	110.2
5	13	2008	101.8	97.2	101.1	101.1	97.3	96.7	96.4	111.6	104.3	103	98.8	99.9
5	14	2008	102.8	97.1	99	101.6	98.8	98.4	99	101.1	106.3	104.7	98.3	103.9
5	15	2008	99.6	103.6	97.5	98.5	96.9	96.8	96.7	110.7	102.3	102.9	98.8	110
5	16	2008	100.3	103.2	96.3	97.1	103.5	102.5	95.9	111.6	105.6	103.2	98.8	105.3
5	17	2008	103.5	103.5	102.8	97.7	102.9	97.6	100.4	98.9	109.9	107.4	101.9	100.3
5	18	2008	101.8	103.3	96.6	97.8	96	99.3	100.9	95.9	108.6	106.5	107.8	104.2
5	19	2008	101.5	103.5	97.1	97.4	100.6	99	111.4	111.8	103.9	97.7	111.4	102.4
5	20	2008	99.8	100.5	96.9	98.1	100.5	96.9	99.2	111.7	103.2	98.5	97.4	110.8
5	21	2008	98.4	103.2	96.5	97.3	103.8	103.8	112.2	110.1	104.3	98.5	109.2	101.3
5	22	2008	97.8	101.1	103.5	98.9	103	102.5	113	109.6	102.6	97.5	96	102.1
5	23	2008	102.2	96.1	97.8	101	97.7	96.6	113.2	110.6	104.1	97.5	97.4	103.5
5	24	2008	98.8	102.7	96.5	97.7	96.9	100	102.1	96.1	110.6	102.8	102.6	99.8
5	25	2008	97.9	102.4	96.2	98.4	96.7	102.3	102.5	96.4	110.7	107.6	108.5	102.9
5	26	2008	98.9	103.6	96.9	98.5	97	102.6	103.4	95.9	109	106.1	106.5	102
5	27	2008	98.3	102.4	100.5	101.3	103.7	102.8	112.7	106.6	105.6	99.9	110.1	113.4
5	28	2008	99.5	103	97.1	97.4	97.3	101.7	111.4	109.8	100.1	97.4	110.8	110.7
5	29	2008	99.5	103.9	96.2	97.9	96	97.7	111.4	108.4	99.4	97	114.2	111.6
5	30	2008	102.2	96.1	97.8	101	97.7	96.6	113.2	110.6	104.1	103.5	96.9	98.2
5	31	2008	98.8	96.5	99.1	101.8	99.4	101.8	102.5	112	106.4	106	105.8	101.1
6	1	2008	96.8	102.4	98.1	101.1	99.7	96.8	101.6	100.3	109.8	107.8	107.6	104.7
6	2	2008	110.5	96.9	100.5	101.8	99.6	104.7	112.2	111.1	105.5	103.5	96.8	110.9
6	3	2008	110.1	112.8	97.7	100.4	97.1	103.3	102.2	101.7	110.9	113.6	113.2	110.6
6	4	2008	106.1	100.7	103.4	97	103.5	111.7	101.7	104.3	112.3	115	114.1	113.8
6	5	2008	101.3	100.9	101.8	97.3	103.4	112.1	103	97.6	115.2	109.6	113	113.8
6	6	2008	101.3	101.2	103.4	96.1	102	109.6	108.3	103.2	110	111.5	112.7	109.2
6	7	2008	109.9	109.7	106.9	98.2	102	109.8	108	102.2	98.7	112.8	114	115.5
6	8	2008	110.8	111.1	96.1	97.6	97.1	110.7	110.9	108.3	100.5	97.6	109.7	112.1
6	9	2008	96.6	102.5	96.2	97.8	102.7	112.5	103.3	97.9	109.2	114	114	116
6	10	2008	96.5	103	97.4	97.1	103.5	113	104.2	98.6	114.5	114	113.8	117
6	11	2008	108.6	99.1	97.2	99.6	97	96.8	108.8	101.3	110.1	114.7	114.1	118.7
6	12	2008	96.2	101.3	96.7	97.5	98.2	96.8	106.7	100.1	111.8	113.9	114	118.5
6	13	2008	100.7	101.6	96.6	97.3	97.9	96.4	112	105	110.4	112.1	109	109
6	14	2008	111.5	112.7	96.6	98.1	97	109.5	110.3	106	99	114.6	111.8	110
6	15	2008	108.8	99.8	99.1	100	98.4	112.1	112.6	108.3	102.1	102.1	103.6	108.9
6	16	2008	108.7	108.9	98.2	100.9	97.8	102.2	107.8	100.1	112.6	108.8	115.2	114.2
6	17	2008	111.5	100.2	99.4	97.1	103.2	110.5	106.6	98.9	109.1	114.3	111.5	117.4
6	18	2008	103.3	100.9	103.7	96.1	102.4	112.6	105.6	99.8	111.8	115	110.8	111.7
6	19	2008	113.1	99.9	97.8	97.6	101.8	110.8	107.9	101.6	111.8	110	113.6	113.6
6	20	2008	112.7	99.3	102.8	101	102.2	111.2	104.5	98.1	109.2	115.1	113.5	117.3
6	21	2008	113	99.9	103.5	96.5	101	96.6	108.8	104.2	103.7	109.1	114.7	114.4
6	22	2008	111.5	112.1	96.6	97.7	97.7	110.4	108	106.3	97.5	97.7	112.6	114.3
6	23	2008	105.9	105.4	107.1	108.9	104.5	102.3	101.5	110.2	113.8	120.1	125.5	120.5
6	24	2008	106.4	104.3	107.6	109	107.1	104.8	114.5	113.9	117	125.8	124.2	122.9
6	25	2008	108.3	105.3	108.5	110.9	106.9	105.3	97.6	111.9	120.2	120.3	124.6	122.8
6	26	2008	105.9	103.7	107.3	108.7	105.6	102.9	111.6	111.9	114	120.1	122.9	120.2
6	27	2008	106.4	102.8	107.7	107.9	105.5	103.4	96.5	113.9	117.4	120.1	120.1	120.3
6	28	2008	112.7	110.8	96.2	97.7	97.1	109.6	107.2	102.7	101.8	109.2	114.1	109
6	29	2008	112.8	112.2	97.3	98.8	97.5	110.8	109.9	108.9	100.6	98	110.7	111.9
6	30	2008	110.1	101.4	99	99.9	96.3	96.6	106.2	100.5	110.4	114.9	113.1	112.8
7	1	2008	111.6	100.6	96.9	97.6	96.1	110.2	107.2	107.8	97.8	114.7	115.4	112
7	2	2008	110.4	102.2	96.5	96.7	99.8	109	104.9	107.2	110.9	110.5	113.9	112.6
7	3	2008	109.7	109	109.7	96.3	102.9	108.5	112	105.6	111	114.6	113.9	112.6
7	4	2008	109.9	104.4	109.9	97.6	97	104.4	110.3	107.4	101.7	97.6	110.8	108.9
7	5	2008	108.7	113.3	108.7	96.6	96.4	112.1	99.2	105.6	103.5	100	111.9	111.3
7	6	2008	110.1	113.3	110.1	97.6	96.6	111.4	108.5	108.6	100.5	104	98	97.4
7	7	2008	99.5	103.9	99.5	98	97.4	103.9	99.9	96.9	100.3	97	113.4	111.4
7	8	2008	99.2	102.7	99.2	101.6	103.6	98.3	96.5	103.9	110.6	109.9	113.9	112.8
7	9	2008	96.8	101.9	96.8	96	103.7	96.6	101.8	103.2	109.7	111.9	113.8	113.8
7	10	2008	96.6	101.7	96.6	95.2	102	99.4	103.2	103.6	111.9	113.8	113.8	113
7	11	2008	98.3	102.2	98.3	99.2	103	97.8	100.6	98.1	99.9	110.3	113.8	113.8
7	12	2008	96.1	101.1	96.1	103.6	102.9	99.9	103.7	98.7	96.9	110.3	110.1	110.9
7	13	2008	98.2	102.5	98.2	96.3	96.8	102.5	98.4	96.1	96.9	100.5	109.9	109.7

2008 Running Cost
Is this a leap year? y

Month	Day	Year	1	2	3	4	5	6	7	8	9	10	11	12
7	14	2008	99.7	103.7	99.7	96.8	101.6	98.6	96	108.5	105.8	99	99.2	96.2
7	15	2008	98.4	102.3	98.4	100.8	103.2	96.5	99.6	96.5	106.6	99.6	99.5	98.8
7	16	2008	98.2	102.1	98.2	102.4	103.1	96.4	100.4	109.2	107.8	101	102.5	99.9
7	17	2008	98.8	102.4	98.8	97.7	103.1	96.4	102.5	109.1	107.5	100.7	101.7	97.8
7	18	2008	96.3	101.3	96.3	103.6	102.3	103.8	103.6	109.1	109.3	103	104.5	101.3
7	19	2008	97.9	101.9	97.9	96.1	103.9	100.9	103.7	100	109.5	103	103.3	101.6
7	20	2008	98.1	102.5	98.1	96.1	100.8	101.5	98	96.2	102.7	108.1	102.2	100.7
7	21	2008	98.7	103.2	98.7	96.8	103.2	102.7	101.2	96.7	102.6	102.1	96.3	111.6
7	22	2008	98.4	101.4	98.4	101.6	102.5	98.4	103.6	108.4	103.9	103.2	107.8	111
7	23	2008	98.1	102.3	98.1	96.8	103	96.1	100.4	109.7	107.3	102.9	98	100.7
7	24	2008	99.1	103.1	99.1	96.6	103.8	98.1	101.2	111.3	109.8	103.5	98.1	96.6
7	25	2008	99.3	103.6	99.3	97.4	103.2	98.9	103.7	109.5	107.4	98.3	99.1	98
7	26	2008	96.3	102.5	96.3	96.8	99.2	101.9	102.5	101.6	109.6	102.7	103.1	102.7
7	27	2008	100.8	101.3	100.8	96.1	99.2	101.3	100	102.8	103.6	108.9	100.9	107.8
7	28	2008	103.5	101.5	103.5	102.4	102.7	96.1	102	111.8	107.2	99.7	114.7	112.6
7	29	2008	102.7	99.4	102.7	102.2	100.8	101.9	98.7	112.3	107.2	99.3	110.2	112.4
7	30	2008	96	101.6	96	102.4	102.8	96.5	102.7	98.7	103.2	104.2	97.3	110.5
7	31	2008	101.3	97.9	101.3	100.1	97.9	100.6	99.2	96.6	100.8	98.3	111	114.6
8	1	2008	97.2	102	103.8	96.1	102.3	102.1	112.1	105.3	104.9	96.8	109.2	113
8	2	2008	97.2	103.4	97.8	99.8	98.3	101.9	96.5	111.5	110.1	101.7	102.2	99.3
8	3	2008	98.7	103.2	98.2	99.3	98.5	103.1	99.2	97.4	106.3	108.3	99.9	97.8
8	4	2008	99.2	96.1	98.1	100	99.2	98.4	101.7	108.3	103.4	110.5	112.3	108.8
8	5	2008	98.3	103.5	96.7	98.1	103.8	97.5	106.5	107.4	102	111.4	115.1	115.4
8	6	2008	98.2	103.7	98.2	98.9	103.9	96.3	112.6	108.1	106	98	112.9	110.1
8	7	2008	100	96.7	99.3	100	98.2	98	99.3	110.3	106.9	99.8	111	114.2
8	8	2008	101.1	98.4	100.3	101.5	98.6	98.5	96.4	109.3	107	99.9	111.4	111
8	9	2008	96.9	103.6	97.9	100.3	98.6	102.3	96.7	101.4	111.4	102.3	103.6	99.9
8	10	2008	97.5	103.1	96.6	98.8	96.6	102.1	97.5	96.7	105.2	106.4	98.7	102.4
8	11	2008	97	103.2	96	98.2	103.8	96.5	111.6	110	99.2	113	110.5	110.3
8	12	2008	97.4	103.3	96.2	96.6	103.2	97.5	110.7	110.8	97.9	113.9	112	112.1
8	13	2008	96.5	102.9	96.6	98.6	100	97.8	109.2	106.3	102.5	109.4	113.7	112.7
8	14	2008	103.9	101	103.1	99.2	103	103.6	111	110.8	98.6	109.5	109.8	110.4
8	15	2008	98	103.9	98	99.4	98.4	101.3	99.3	107.1	106.2	98.6	111.7	114.9
8	16	2008	97.6	103.8	98.2	100.6	99.7	102.7	98.1	97	111.4	102	103.6	101.6
8	17	2008	99.3	96.2	98.7	101.2	100	96	100.8	110.2	108.9	101.6	104.5	105.2
8	18	2008	100.3	96.7	100.5	100	101.6	98.5	110.9	107	104.8	112.7	109.7	114.3
8	19	2008	96.8	103.2	103.8	98.8	103.6	96.9	102.5	106.9	103.3	109.2	112.4	110.3
8	20	2008	100	98.3	99.2	101.7	98.4	99.3	96.9	109.7	107.1	98.6	110	112.4
8	21	2008	99	103.2	99	100	96	96.2	105.3	108.4	102.3	111.9	112.7	115.2
8	22	2008	98.2	97.6	98.9	100.1	96	99	97.1	113	101.7	104.6	102.5	110.1
8	23	2008	102.8	101.4	103.9	98.2	96.2	101	100.5	112.1	106.8	98.4	101.2	99.5
8	24	2008	99.9	98.2	101	103.1	102	99.2	102.9	103.9	111.6	105.2	106.7	104.4
8	25	2008	102.1	100.1	102	103.3	100.6	102.2	99.5	112.9	108.2	98.6	109.4	110.2
8	26	2008	100.8	98.6	100.4	101.2	98.5	99.4	96.7	109.9	100.9	101.8	109.7	111
8	27	2008	102.6	99.2	100.6	101.6	98.5	98.4	97.2	109.4	106.2	101.4	109.7	111.8
8	28	2008	100.5	96.3	98.8	100	97.7	96.4	109.7	107.4	106.8	99.5	110.3	110.2
8	29	2008	99.7	96.1	98.2	100.2	96.7	96.4	96.8	105.1	102.3	109.7	115.6	113.4
8	30	2008	96.6	102.6	96.4	98.9	98	103	96.2	112.8	108	100.4	101.1	98.3
8	31	2008	99.9	98.4	100	102.2	101.3	96.5	100.7	101.3	109.8	105.7	104.7	102.4
9	1	2008	98.5	102.9	96	97.1	96.2	101.2	97.7	102.5	103.4	103.5	96.3	110.4
9	2	2008	100.2	96.4	98.5	99.3	97.3	100.3	111.6	108.2	104.3	110.9	111.3	110.4
9	3	2008	100.4	96.2	98.5	99	97.4	98.8	110.9	108.4	98	110.9	113.8	111.4
9	4	2008	99.9	103.4	96.6	97.1	96.4	96.8	108.7	106.5	96.7	109	111.2	112.7
9	5	2008	101.9	96.7	97.8	99.4	97.7	98.7	110.6	108	96.6	112	114.5	111.2
9	6	2008	98.4	103.8	96.7	97.4	96.8	101	97.2	109.5	104.1	97.1	99.4	108.9
9	7	2008	99.3	102.9	96.8	98	96.7	103.2	99	109.8	108.7	103.9	99.4	102.9
9	8	2008	98.5	102.9	96	97.1	96.2	101.2	97.7	102.5	103.4	103.5	96.3	110.6
9	9	2008	100.3	103.8	96	97.2	101.9	96.8	110.3	106.5	104	112.3	111.2	112
9	10	2008	102.6	97	98.2	98.6	97.3	98.7	112	108.3	99.9	110.5	112.5	115.2
9	11	2008	102.1	96.4	98.1	99.1	96.8	98.2	110.8	109.5	99.7	111	114	114
9	12	2008	101.9	97.8	97.6	98.6	96.8	97	110.2	107.9	101.5	103	110.4	111.9
9	13	2008	98	102.8	97.8	96.7	100.3	100.8	98.3	112.3	101.6	103.2	110.5	115.1
9	14	2008	98.9	103.2	96.8	98.3	103.5	103	98.9	111.3	109.8	104.4	97.9	102.3
9	15	2008	102	96.7	97.6	97.9	96.2	97.8	110.2	105.9	103.9	109.5	111.7	109.6
9	16	2008	101.9	96.8	98.3	99.1	96.5	97.7	108.8	107.7	98.8	108.8	110	114.5

2008 Running Cost
Is this a leap year? y

Month	Day	Year	1	2	3	4	5	6	7	8	9	10	11	12
9	17	2008	98	97.8	96.8	97.4	103.5	96.6	105.8	107.4	98.2	96.3	114.4	111.2
9	18	2008	101.3	96.9	97	98.5	103.8	97.5	109.5	106.8	104.5	112.1	115.1	112.4
9	19	2008	101.8	96.4	97.2	97.9	96.9	97	109.1	105.2	102.9	110.9	113.8	115.2
9	20	2008	100.7	97	97.3	99.1	97.7	102.6	98.3	106.5	104.7	100.2	96.6	101.5
9	21	2008	102.7	98.6	99.9	101.1	99.9	96.7	101.3	105.2	106.8	102.8	102.8	99.4
9	22	2008	98.8	101.1	101.6	102.7	102.5	103.4	108.4	106.7	104.8	99.1	108.9	111.6
9	23	2008	97	99.1	100.2	101.1	98.9	100.9	104.5	104.8	103.8	98.7	114.5	110.2
9	24	2008	98.6	99.1	100	100.7	98.3	99.8	113.3	111.1	102.4	96.2	110.1	110.6
9	25	2008	103.4	97.3	99.1	100.6	98.7	99.2	110.4	111.9	102.3	98.6	109.5	113.9
9	26	2008	101.3	96.1	97.2	97.8	96.2	96.3	109.5	106.4	97	113.2	111.9	111.1
9	27	2008	100.6	96.7	97.4	98.7	97.8	102.9	97	111.8	108.4	102.9	96.4	111.6
9	28	2008	99	103.4	96.4	98.5	98.4	103	98.4	108.6	107.6	100.2	100.9	96
9	29	2008	102.5	96.5	100	101.1	99	100.4	112.7	107.5	108.6	98.5	97.2	98.4
9	30	2008	98.4	100.7	101.2	102.4	100	100.9	96.5	98	105.8	102.4	96.9	103.9
10	1	2008	103.5	99.1	100.1	100.7	98.4	99.2	112.8	111.5	106.6	102.9	103.8	96.1
10	2	2008	100.8	98.6	100.1	98	99.7	98.9	113.2	110.8	101.3	104.2	99.5	99.6
10	3	2008	103	97.8	99.5	100	99.8	99.4	104	109.8	108.5	103.6	99.2	99.3
10	4	2008	102.5	98	99.2	100.6	99.5	103.3	98.4	96.8	112.1	103	97.4	103.7
10	5	2008	101.6	97.8	99.9	101.4	101.3	100.8	100.6	102.2	112.4	107.2	105.6	104.8
10	6	2008	103	98.4	99.3	100.4	98.9	100.2	107.5	112.3	103.6	96.7	99.2	111.2
10	7	2008	97.6	99.6	100.5	100.8	98.9	100.4	98.1	101.3	104	102.2	96.9	102
10	8	2008	102.4	100.1	100.8	101.4	99.2	100.2	103.1	112.4	104.1	100.1	97.2	99.7
10	9	2008	103.6	99.3	100.2	100.9	98.8	100.5	113.3	111.7	101	97.9	101.5	98.2
10	10	2008	98.4	103.1	98	99.8	97.8	100.3	112.6	111.1	102.4	99.6	101.5	98.7
10	11	2008	103.6	98.7	100.5	101.4	100.9	101.6	99.7	109.3	104.9	108.1	106.4	105.1
10	12	2008	99.2	99.6	101.6	102.8	101	99	102.2	97.1	112.2	101.7	104.2	102.7
10	13	2008	96.1	99.6	100.3	101.6	99.7	102.6	112.5	105	107.7	96.8	111.3	113.2
10	14	2008	103.1	99.9	100.4	99.7	99	102.1	109.7	107.5	103	100.8	110.7	97.1
10	15	2008	97.6	99.7	99.5	101.5	100.3	100.3	111.8	110.8	103.9	100.2	96.2	99.4
10	16	2008	98.9	100.1	101.3	101.9	99.8	102.3	101.7	111.3	104.7	99.8	98.3	96.2
10	17	2008	97.6	100.2	101.2	101.5	100.8	101.6	103	112	105.5	98.1	96.2	108.1
10	18	2008	100	100.5	102.4	103.7	103.1	100	102.6	103.3	104.2	107.9	104.1	101.1
10	19	2008	97.6	100.2	101.6	102.7	101.7	98.8	101.6	103.1	104.2	104.6	103.4	104.9
10	20	2008	102.7	98.5	99.6	100.9	98.5	98	109.1	105.8	104.1	111.6	110.6	109.8
10	21	2008	102.4	99.9	100.9	101.6	100.3	100.3	108.4	112	102.5	97.2	96.7	107.8
10	22	2008	97.6	99.8	100.5	101	98.7	98.1	110.1	108.5	106.8	97.9	110.1	111.1
10	23	2008	100.8	99	100.3	101.4	100.4	100.5	111.8	110.7	106.6	96.9	99.7	110
10	24	2008	100.9	98.4	99.9	101	98.9	98.7	110.4	108.9	107.6	103.3	96.1	111.6
10	25	2008	101.4	97.9	99	100.4	99.5	103.1	102.8	102.6	106.4	108.6	103.7	100.2
10	26	2008	98.4	99.5	101	102.2	101.7	98	99	101.6	97	111.9	107.6	106.4
10	27	2008	100.2	103.8	103.2	100.8	102.3	102.6	113	110.8	103.3	99.5	98	97.1
10	28	2008	98.6	101.3	102.1	102.6	100.9	101.4	113	112.2	102.7	100.2	98	98.2
10	29	2008	98.7	101.1	101.9	103.3	101	100.6	112.7	111.3	104.2	99.2	99.4	97.1
10	30	2008	98.7	101.6	102.7	103.4	101.7	102.1	97.5	98.8	106.1	102.4	99.6	98.2
10	31	2008	98.4	100.4	102.1	102.5	100.9	101.4	112.8	110	103.2	100.5	96.9	97.2
11	1	2008	98.4	99.2	100.4	103	102.5	98.9	99.3	97.9	111.1	106.7	103.2	104.4
11	2	2008	101.9	99.2	103.8	96.6	96.9	101.6	96	103.7	111.9	108.2	107.5	105.7
11	3	2008	100.9	99.8	102	103.2	101.9	102	97.5	109.6	107.7	98.9	109.9	105.3
11	4	2008	97.1	102.4	98.1	99.6	96.5	98.7	111.2	108.1	100.8	97.5	97	110.1
11	5	2008	100.2	96.7	101.3	102.6	100.5	99.4	111.2	112	104.4	101.4	97.5	109.9
11	6	2008	96.7	102.6	99.3	96.3	102.9	102.2	112.9	113	105.8	102.3	97.9	98.7
11	7	2008	98.1	102.7	96.3	96.6	103.5	101.7	111.2	112.3	104	100	97.2	96.9
11	8	2008	103.3	100.9	103.9	96.8	103.2	98.1	98.4	99.8	109.1	103.9	108	107.4
11	9	2008	99.2	102.4	96.2	97.5	96.8	100.9	102.4	102.3	110	110.8	106.1	102.6
11	10	2008	100.6	103.2	97.3	98.3	100.8	102.7	99.2	111.3	105.8	102.7	97.8	98.4
11	11	2008	98.2	102.5	102.4	96.1	102.7	100	111.6	109.7	103.3	98.6	96.8	97
11	12	2008	97.9	101.5	101.6	103.9	103	100.6	111	108.3	102.1	99.6	98.7	97.1
11	13	2008	97.8	101.5	103.8	101.6	103.4	101.1	99.1	103.9	110.3	106.9	99.8	99
11	14	2008	99.7	103.7	97.9	98.4	96.8	98.3	96.7	102.8	105.2	101.3	103.9	103.4
11	15	2008	98.9	103.6	97.1	98.4	97.3	101.5	102.3	102.2	111.3	108.1	104.9	102.7
11	16	2008	99	103.6	96.9	97.9	97.4	101.6	102.6	96.1	109	106.4	107.4	105.4
11	17	2008	100.1	99.2	98.7	99.4	97.4	99.2	99.9	109.2	104.5	104.9	107.2	102.4
11	18	2008	97.9	101.6	103.8	96.1	102.4	100.6	96	108.8	100.7	97.3	96.9	106.8
11	19	2008	100.2	103.3	96.2	97.1	102.4	102.3	113.1	112.8	106.5	101.4	101.8	96.8
11	20	2008	99.9	103.6	98.1	99	101.6	102.7	108.4	102.3	107.7	107.1	101.7	99.3

2008 Running Cost
Is this a leap year? y

Month	Day	Year	1	2	3	4	5	6	7	8	9	10	11	12
11	21	2008	100	100.8	96.9	99.2	96.5	103.2	99.2	104.4	107.4	107.7	103.2	103.5
11	22	2008	98.3	103.6	97.1	98.3	97.6	101	96.9	104.3	111.1	108.2	108.4	106.6
11	23	2008	100	97.9	102.9	96.4	102.3	99.6	102.5	96.1	103.4	106.5	108.9	106.8
11	24	2008	100.1	99.2	98.7	99.4	97.4	99.2	99.9	109.2	104.5	104.9	107.2	102.4
11	25	2008	97.9	101.6	103.8	96.1	102.4	100.6	96	108.8	100.7	97.3	96.9	106.8
11	26	2008	101.2	98.4	101.5	101.6	98.5	97	107.6	110.9	104	97.3	109.2	110.8
11	27	2008	101.7	100.1	100.8	97.6	102.4	103.9	103.1	112.5	109.5	99	101	97
11	28	2008	99.3	103.8	96.2	96.6	103.3	99	103.9	96.2	105.1	106.1	100	98
11	29	2008	102.7	99.8	103.8	96.9	103.2	99.9	99	100.1	109.1	102.5	103.9	102.6
11	30	2008	99	96.8	99.6	101.3	98.4	101.8	97.4	101.4	110.9	106.9	107.7	106.1
12	1	2008	99.4	96.8	97.1	98.6	103.8	103.2	96.2	107.7	108.4	103.5	102.2	99.4
12	2	2008	98.9	102.4	96.6	97	103.8	101.3	103.6	113	104.4	102.3	99.3	97.1
12	3	2008	102.8	98.4	97.9	98.3	97.6	97.2	96.4	112.7	112.3	102	104.8	101.2
12	4	2008	101.2	100.8	98	98.1	99.2	103.2	113	110.4	105.1	107	101.2	98.6
12	5	2008	100.7	98.4	97.3	96.8	102.8	102.1	113.2	110.7	111.6	108.6	103.3	99.8
12	6	2008	98.9	102.8	96.6	96.4	103.7	99.9	100	98.9	110.8	110.2	106.7	101.8
12	7	2008	98.4	102.2	102.4	97	98.4	100.9	102.7	96.4	109.1	104.9	109.5	107.8
12	8	2008	103.8	97.7	98.1	96.2	101.5	103.8	96	106.9	100.8	103.8	101.7	101.4
12	9	2008	100.6	96.1	97.1	97.6	103.6	101.7	108.4	96.2	110.7	102.7	106.4	104.8
12	10	2008	103.3	97.3	100.1	99.4	96.2	96.2	103.5	113.2	109.7	104.5	108.8	106.6
12	11	2008	101.8	96.5	99.2	99.2	96	103.1	99.1	111	110.4	103.1	100.7	108
12	12	2008	102	96	98.2	96.9	102.9	102.6	112.1	112.6	110.1	109.7	107.2	105.6
12	13	2008	100.3	101.6	96.7	97.5	100	98.8	100	102.3	112.8	110.3	108.2	107.1
12	14	2008	101.5	96.2	98.2	99.2	97.8	102.5	99.2	99	110.4	107.4	112.3	112.7
12	15	2008	103	97.4	99.2	98.7	96.1	103.7	100.7	96.7	110.2	108.2	107.5	101.2
12	16	2008	102.1	96.4	98.6	98.2	103.2	103.5	96.5	110	106.1	106.8	105.3	103.1
12	17	2008	103.9	98.3	100.1	99.8	97.3	99.4	97.1	111.1	106.9	109.4	108.2	104.8
12	18	2008	100	99.7	99.5	99.7	97.3	98.6	99.7	113	110.6	108.2	107.7	104.1
12	19	2008	103	97	99.4	99.4	97	96.3	96.9	97.8	108.9	108.7	105.4	104.1
12	20	2008	102.7	97.1	99.4	99.5	96.5	100.9	100	103.6	99.3	107	111.9	112.1
12	21	2008	100.9	96.6	98.9	98.8	96.8	100.6	103.9	98.1	111	109	109.1	108.5
12	22	2008	99.8	100.8	97.5	97.9	100	103	97.9	109.7	111	108.6	105	105.5
12	23	2008	101.1	96.1	98.6	99	97.1	101.6	99.3	110.5	104.9	102.9	100.7	104.1
12	24	2008	101.8	96.9	98.8	98.3	98.4	103.2	96.9	109.3	110.9	105.7	103.8	103
12	25	2008	98.3	99.2	98.6	99.5	98.3	103.6	96.7	101.8	104.5	97	109.5	113.2
12	26	2008	100.4	102.6	100.8	96.8	98.1	97.5	98	96.7	110.2	101.8	107	106.3
12	27	2008	99.5	100	98	97.9	96.7	101.6	102.9	96.7	100.9	109.8	107.1	108.2
12	28	2008	98.3	99.2	98.6	99.5	98.3	103.6	96.7	101.8	104.5	97	109.5	113.2
12	29	2008	102.1	97.1	98.6	99.2	96.3	101	102.8	97.4	96.5	109.4	105.4	104.1
12	30	2008	100	103.2	96.5	96.4	103.2	96.8	102.6	106.4	109.5	103.5	98.8	99.3
12	31	2008	96	101.7	100	96.8	102.3	102.5	100.7	111	108.1	101.4	104.8	103.4

Based on Hour Ending	1	2	3	4	5	6	7	8	9	10	11	12
Total $ by Hour	36,849	36,553	35,600	35,448	36,354	36,905	37,863	38,719	38,804	38,379	38,600	38,706
Total Obs by Hour	366	366	366	366	366	366	366	366	366	366	366	366
Off Peak Hrs ($)	36,849	36,553	35,600	35,448	36,354	36,905	37,863					
Total Off Peak Obs by I	366	366	366	366	366	366	366					
Mid Peak Hrs ($)								38,719	38,804	38,379	38,600	38,706
Mid Peak Obs by Hour								366	366	366	366	366
Priority Peak Hrs ($)												
Priority Peak Obs by Hour												
Total $ Check	0.00	0.00	0.00	0.00	0.00	0.00	0.00	0.00	0.00	0.00	0.00	0.00
Total Obs Check	0	0	0	0	0	0	0	0	0	0	0	0

Total Avg. $/Mwh	$103.97
Off Peak Avg. $/Mwh	$101.09
Mid Peak Avg. $/Mwh	$105.71
Priority Peak Avg. $/Mwh	$107.28

13	14	15	16	17	18	19	20	21	22	23	24	SUM	DOW
103.8	104.8	97.6	100.6	102	111.5	112.8	109	97.3	107.3	103.4	102.6	2475.5	2
99.3	98	97.6	104.6	104.5	99.4	111.8	110.7	111.7	105.7	108.3	99.9	2477.1	3
104.1	101.2	104.7	103	101.8	96.6	113.2	114.5	111.7	102	109.3	102.3	2487	4
97.9	97.6	97.8	98.2	97.2	101.5	108.8	105.7	101.1	106.8	110.1	100.5	2412	5
103.8	104.8	97.6	100.6	102	111.5	112.8	109	97.3	102	110.5	102.6	2477.3	6
98.9	105.4	101	107.6	102.9	102.2	111.4	96.6	99.8	101.9	109	100.7	2478.6	7
97.1	97.5	100.1	97.6	103.6	98.4	110.4	109.1	100.6	101.9	103.5	104	2446.7	1
102.7	99.9	101	99.8	97.9	98.3	112.5	112.9	103.9	103.7	105.7	99.1	2452.3	2
99.3	98	97.6	104.4	104.3	99.3	111.8	110.8	111.8	105.7	108.3	99.9	2476.8	3
103.9	101.3	104.5	102.8	101.7	97	113.2	114.5	111.8	102	109.3	102.3	2486.5	4
97.9	97.6	97.8	98.2	97.2	101.5	108.9	105.8	101.1	106.8	110.1	100.5	2412.2	5
106	105.6	103.6	101.8	99.4	101	113.1	108.9	97.4	105.1	110.8	100	2488.4	6
101.4	103.6	106.6	103.5	101.7	103.1	109.6	99.1	102.5	105.7	109.6	98.7	2476.2	7
103.5	101.2	105.6	101.5	99.3	103.5	112.4	115	97.6	103.9	98.9	97.9	2454.2	1
100.3	100	102	99.4	96.8	96.8	110.9	110.1	100.5	104.2	99.6	99.3	2442.1	2
100.6	106	104.6	104.1	103.8	99.5	112.8	109.3	97.7	100.9	108.7	99.5	2497	3
98.4	99.9	100	97.1	103.6	98.7	109	109.6	101.1	104.2	112.8	103.6	2450.6	4
103.9	97.4	97.4	102.8	104	100.4	113	98.3	96.3	102.9	105.7	97.8	2456.6	5
99.5	100	100.8	99.2	102.7	97.9	112	110.8	96.9	101.4	105.2	96.5	2415.5	6
99.9	100.4	101.5	100	98.6	101.7	111.7	113.5	114.9	97	110.4	113.2	2452.8	7
96.5	100.2	103.4	110.4	111	97.7	113.8	114.6	109.3	98.4	102.4	97.4	2468.3	1
101.2	104.5	98.1	97.5	104.3	98.4	111.7	114.6	110.3	104.5	100	102.9	2456.7	2
99.2	101.1	100.1	99.7	98.4	111	114.6	114.6	109.6	103.9	109.9	102.4	2483.6	3
103.2	96.9	97.7	103.2	102.2	108.9	114.6	110.7	101.1	101.9	110.3	102.4	2469.7	4
96.3	97.5	98.2	100.1	101.6	96.3	111.6	96.5	101.5	102.3	113.3	103	2427.4	5
104.6	105	107.2	102.5	106.7	101.3	97.4	96.2	101.8	105	99.6	100.7	2428.4	6
105.2	106.8	104.6	101.3	98.7	97.5	110.2	115.2	101.1	104.6	112.6	102.7	2478.1	7
98.8	99.7	97.7	96.9	109	109.6	112.9	113.4	98.7	98.5	99.5	100.6	2450.3	1
97.9	97	97.9	96.4	110.6	111	111.9	114.8	101.6	101.4	98.5	101.4	2466.3	2
97	97.1	104.4	111.6	110.3	110.1	114.6	112.8	97.8	99.6	106.9	100.1	2491.9	3
97.7	100.3	99.5	96.6	96.7	110.6	110	110.7	98.8	99.3	107.3	99.1	2463	4
104.9	100.9	101.6	99.1	99.1	98.6	111.2	102.4	97.3	105.8	109.5	99.3	2461.5	5
101.4	107.7	108	106.6	102.2	104.9	96.7	101.9	107	105.1	96.5	103.3	2470.2	6
105.7	105	102.4	108.3	103.3	99.4	114	111.1	99.4	109.7	96.4	96.8	2476.7	7
98.3	104.7	97.3	103.3	101.8	103	112.2	110.1	100.5	105.3	101.2	100.7	2462.3	1
100.6	102.9	104.8	103.7	108.7	100.9	115.2	97.6	104	107.5	101.1	99.5	2466.3	2
103.1	105.5	105.9	102.5	106.5	99.4	106.6	99.2	106.4	105.2	101.2	101.7	2458.8	3
105.4	105.8	109.6	105.8	107	98.9	109.1	97.6	106.2	105.2	98.4	99.7	2473.2	4
101.4	101.5	102.6	108	103.7	100.2	111.6	98.6	102.6	110.5	110.2	103.6	2476.4	5
100.6	107.9	106.9	101.3	102.1	103.4	108.9	112	99.5	105.9	109.3	102.3	2473.9	6
102.5	101.6	105.4	103	102.2	100.2	100.9	108.9	100.7	102.9	112.8	103.2	2475.7	7
97.8	98.9	98.1	102.2	111.8	109.1	111.3	113	98.3	100.2	98.3	100.5	2451.2	1
104.5	103	97.1	100.3	101.9	99	113.1	110.2	100.7	102	101.6	103.2	2452.9	2
104.1	96.6	102.1	99.8	98	96.6	111	114.9	102.7	106.8	108.4	101.1	2469.5	3
99.1	103.3	103.1	99.6	100	100	109.1	110.8	102	101	111.3	102.7	2452.7	4
102.2	101.4	101.1	100	103.7	99.1	108.8	96.8	99	106.4	102.5	102.2	2460.6	5
111.5	104.3	109.9	111.2	108.1	102.2	97.4	97.9	102.1	105.5	98.4	99.2	2465.7	6
109.7	109.5	110.5	109.1	104.5	106.7	100.7	103.9	101.6	101.1	101.4	103.7	2486.8	7
103.6	102.1	102.9	100.7	108.2	104.7	96.8	106.4	106.2	107.5	101	99.1	2450.9	1
102.4	106	105.6	104.1	103	99.7	105	109.4	98	103.1	99.8	96.7	2453.1	2
108.1	101	102.1	107.1	106	102.6	102	111.1	104.2	108.9	96.3	98.3	2467.3	3
107.9	100.9	107.2	102.9	101	100.9	109.4	113.2	101.6	106.3	112.6	96.4	2490.6	4
107.3	106.6	103.8	103.1	106	104.3	107.8	96.7	100.5	106.5	111	101.5	2491	5
104.7	106.5	106.8	104.7	107.2	103	101.7	99.3	103.2	106.8	98.2	96	2459	6
108.5	109.1	107.3	112.1	109.6	105.2	101.4	97.8	102.6	105.7	99.5	96.6	2478.4	7
108.7	107.9	105.4	103.2	105.4	101.4	111.6	111.4	99.8	108.9	100.7	99	2479.2	1
101.4	108.5	104.6	99.4	99	104	113.3	110.7	106.3	112.2	96.6	97.3	2455.9	2
105	104.6	102.1	100.6	99.2	97.8	96.1	111.4	98	101.7	111.9	101.7	2453.5	3
103.5	101.6	100.8	98.9	97.8	97.4	108.3	113.5	100.5	101.5	112.3	102.6	2457	4
102.9	104.5	106	104.3	105.5	105	97.9	102.3	105.5	110	96.4	102.9	2468.3	5
102.9	104.5	103.7	101.7	106.3	103.7	104.1	100.1	102.3	103	112.7	100.4	2447.5	6
106.2	104.8	104.7	103.7	107.5	102.8	103.1	98	100.4	105	109.1	102.6	2471.2	7
103.1	103.1	101.7	99.6	101.5	98.7	112	110.6	99.2	103.7	97.4	97.1	2433.5	1
105.7	104.8	103.9	100.4	99.5	99.5	110.5	106.4	102.1	105.7	98.4	101.9	2468.8	2
106.1	104.8	103.3	102	101	99.5	97.2	111.5	101.8	106.6	98.8	100.2	2476	3

13	14	15	16	17	18	19	20	21	22	23	24	SUM	DOW
103.1	101.4	102.4	100.7	97.1	98.6	106.2	113.3	98.7	102.9	112	97	2479	4
101.4	100.9	99.4	98.4	101.4	101.7	96.9	96.5	98.1	101.2	111.9	102.5	2436.4	5
106	100.9	106.9	104.6	102.9	100.8	97.8	109.3	97.2	108.3	109.9	100.6	2474.3	6
104.5	103.4	104	104.6	108.4	104.1	97	111.1	101.6	100.5	105.6	96	2473.7	7
98.2	96.8	97.8	97	97.2	100.5	110.5	109.4	110.9	102.7	96.2	100.2	2427.6	1
111.9	109.7	99.6	111.6	102.2	99.6	113.4	111.5	114.5	97.4	110.1	102.5	2535.6	2
100.3	104.3	104.2	101.8	101.5	97.9	112	114.8	97	102.3	109.4	103.7	2465.4	3
102.1	103.9	104.4	104.1	100.6	104.7	97.4	111.1	104.3	104.9	109.8	101	2485.2	4
101.6	102.1	101.5	101.4	107.8	105.8	98.6	110.5	99	102.4	96.1	96.4	2334.7	5
104.3	108.1	111	111.2	108	105.2	104.9	99.6	108.7	110.4	112.8	102.2	2496.9	6
107.2	106.6	105.9	105.6	108.5	103.5	103	98.9	106.8	111	97.3	98.7	2213.7	7
109.1	97.9	96.9	96.4	107.8	110.6	111.6	115.5	110.7	109.1	102.1	103.8	2205.5	1
109.6	104.9	97	96.6	105.2	109.2	114.4	115.9	110.8	110.3	103.7	98.2	2305.9	2
104.7	96.6	111.8	112.7	111.3	112.2	113.8	112.6	115.4	109.3	100.4	103.7	2152.5	3
113.6	112.2	112.2	110.2	115.1	111	112.5	113.9	112.7	111.8	97.1	100.4	2352.6	4
111.5	108.8	112.9	108.8	110.2	109.5	113.8	113.8	111	104.9	103.5	96.6	2385.9	5
108.8	105.2	108.5	109.4	111	109.3	113.8	113.6	115.1	104.4	103.3	96.7	2510.1	6
109.9	105.2	106	108.7	113.3	110.1	114.4	117.3	110.8	114.1	101.7	97.5	2524.9	7
100.7	101.7	99.4	97.6	97.8	97.6	109.1	115.3	97	107.4	102.8	101.9	2431.6	1
98	97.7	97.2	96.1	96.8	104.7	109.3	110	111.6	98.7	106.1	97.6	2427.9	2
111.1	97.3	96.9	112	102.1	96.2	113.1	109.4	109.2	97.4	108.7	109.4	2467.8	3
114.4	109.8	109.1	114.5	115.2	112.4	109.1	111.8	111	98	110.7	110.2	2580.9	4
97.5	97.6	98.3	98.8	98.6	110.1	112.5	109.8	96.9	100.4	112.2	96.2	2432.2	5
103.4	107.1	108	108.8	104.8	107.6	98.5	98.6	100.1	103.8	96.4	97.2	2452.2	6
111	108.9	112.8	111.9	106.5	101.5	104.6	97.3	104.5	104.8	109.6	101.9	2510.8	7
104.1	103.8	104.2	102.7	100.1	98	101.7	111.1	98.1	112.8	101.3	97.9	2296.4	1
104.1	104.4	103.9	101.4	104.2	96.8	110.1	108.9	99	104.7	100.5	102	2445.2	2
97.3	97.8	98.6	97.7	98.6	97.8	109.4	115.5	101.8	102.2	108.9	103.2	2444.5	3
103.6	103.3	103.4	104.2	105.1	102.4	97.5	111.2	103.2	105.4	109.9	102.1	2471.3	4
104.8	105.7	105.1	105.3	106.7	106.4	97.8	104.8	102.6	107.1	101	99.7	2463.9	5
107.6	106	108.1	107.9	105.5	100.6	102.1	97.6	102.8	106.9	100.2	102.1	2455.1	6
111.9	110.9	109.4	110.5	102.9	102.7	97.5	100.2	105.9	106.6	96.2	100.8	2482.8	7
108.8	115.6	111.3	112.9	114.2	114.3	117.4	118.7	111.3	96.2	108.2	113.3	2601	1
111.5	109.5	115.2	112.8	113.7	110.1	120.1	113.9	109.6	97	106.7	112.9	2591.6	2
113.7	112.2	113.5	111.5	112.9	110.9	118	119.6	109.5	111.4	111.2	112.5	2622.3	3
109.4	109.5	110.8	110.1	110.9	115.6	112.6	116.3	111.7	108.8	110.8	110.7	2594.2	4
113.9	109.6	114.5	113.1	116.9	113.8	117.3	113.9	112.7	111	102.9	105.1	2613.6	5
115.6	112.3	115.5	112.7	112.3	109.6	113.8	115.2	115.6	96.9	107.8	107.8	2577.2	6
110.3	103.7	109.8	98.5	110.3	115	109.6	115.2	110.9	96.7	101.3	112.7	2503.1	7
98	100	98.6	98.7	100.6	99.3	113	109.3	96.4	109	101.2	97.3	2436.5	1
99.6	99.8	101.2	101.5	101	98.7	106	115.3	96.9	105.5	102.4	100.1	2445.4	2
97.7	96.9	98.1	98.3	100.7	100.2	106	111.8	99.4	100.6	108.9	97.2	2435.9	3
98.4	99.1	99	98.4	98.7	98	99.1	109.9	96.7	102.7	108.3	98.8	2403.8	4
97.1	97.3	98.8	97.3	99.2	100.4	96.9	96.1	99.1	102.2	108.7	96	2406.1	5
107.6	102.1	101.9	108.1	106	104.2	101.1	99.1	105.8	105.7	109.8	97	2473.1	6
104.2	105	105.3	103.8	108.7	104.1	100.1	109.5	104	109	101.9	99.6	2498.7	7
98.4	98.2	97.3	97.7	100.1	98.2	99.3	109.3	101.6	109.4	98.5	99.9	2423.4	1
100.5	102.3	103	99.9	104.4	101.2	112.3	96.4	102.8	106.3	97.4	102.1	2451.6	2
100.4	102.5	100.6	100.3	102.4	101.9	98.5	113.6	96.9	103.1	111.5	100.9	2437	3
102.6	100	99.7	97.5	99.9	99.5	97.6	115.1	100.3	107.1	110.5	100	2451.2	4
102.9	100.5	100.3	100.3	102.7	104.6	104.3	98.3	100.7	107.4	112.1	100.2	2469	5
107.1	106.8	108.5	107.3	106.3	103.6	107	102.3	102	108.1	96.7	103.2	2481.9	6
104.9	112.4	112	112.7	109.6	105.5	100.5	99.3	102.1	108.7	98.3	96.2	2473.8	7
103.9	103.7	104.5	102.6	103.4	103.3	99.5	96.2	99.7	105.5	97.3	96.2	2438.4	1
104.1	102	101.7	98.8	99.2	102.4	97.6	96.1	98.2	106.4	109.3	96	2434.2	2
100.1	104.8	97.4	104.8	98	99	102.4	109.4	99.5	112.1	109.9	97.9	2446.2	3
106.7	106.8	103.1	103.5	103.6	106.9	96.7	101.6	106.2	107.3	98.1	100.8	2481.5	4
105.8	107.6	106.8	104.8	106.3	107.7	105.1	99.1	101.5	109.4	110.2	100.5	2491.4	5
108.9	108.5	107.2	106	103.7	101.4	104.8	100.7	102.9	111.3	108.4	103.4	2491.4	6
112.1	111	111.4	108.6	106.7	101.9	105.9	104.7	106.1	110.7	96.1	101.1	2511.2	7
97.1	98.8	96	96	98.5	99.2	96.1	115.3	101.6	106.1	106.7	99.6	2452.3	1
103.9	114.2	115	113.5	96.3	108.5	112.2	111.8	105.3	100	98.1	99.7	2496.4	2
115	111.4	112.9	112.9	112.9	96.6	114.3	110.5	114.8	103.4	108.1	99.2	2515.9	3
111.5	110.7	108.8	113.8	112.2	96.5	96.5	112.5	108.8	103.3	112.4	96.2	2497.2	4
115.1	109.3	109.4	105.3	97.6	101.5	108.1	115	97.1	98	111.4	112.6	2514.1	5

13	14	15	16	17	18	19	20	21	22	23	24	SUM	DOW
99.3	99	98.2	105.4	105.2	104.7	103.7	96.7	104.6	101.7	107.6	96.9	2419.7	6
106.6	106.6	105.9	104.7	102.4	99.8	105.8	98.7	98	107.8	111.6	100.6	2466.2	7
115.4	115.6	98.9	97.5	100.6	103.4	98.1	109.9	111.4	105.9	109.8	100	2484.5	1
98.7	96.3	106.9	113	101.3	99.2	96.2	109.7	96.5	101	110.8	102.7	2441.5	2
103.9	101.3	115.1	111.5	100	99.4	97.5	115.1	96.2	105.5	108	99.8	2464.3	3
96.2	112.1	101.3	108.5	98.1	100.2	99.7	112.3	97.2	106	105.9	99.9	2451.7	4
103.9	114.9	110	97.7	102.7	96.2	102.4	109.4	101.7	105.4	106.5	97.3	2471.4	5
105.1	105.4	105.4	104	103.9	102.8	101.1	100.1	105.2	108	97.7	101.7	2467.2	6
104	104.5	103.9	99.9	104.8	103.9	99.6	101.3	99.8	102.4	113.1	97.7	2453.6	7
112.2	113.6	115	110.9	112.1	109.2	106.7	112	115	100	106.8	100.3	2551.5	1
114.3	114.3	111.5	113.6	112.2	105.1	114.9	109.3	111.5	100	107	97.5	2524.7	2
110.7	113.6	105.3	111.5	97.3	97.2	96.4	109.6	106.7	100.8	113.2	98.4	2499.3	3
103.5	98.2	101.2	101.5	101.4	102.5	98.7	96.3	97.1	106.9	113.2	102.9	2451	4
109.2	103.7	97.4	96.8	96.1	98.8	98.3	96.7	96.7	103.1	106.5	97.7	2418.7	5
96.2	105.2	104.2	103.9	102.5	101.1	98.8	97.1	100.2	109.7	107.6	97.5	2430.6	6
100.5	100.2	102	100.6	98.3	96.8	96.1	112.8	95.9	98.7	97.2	99.6	2421.2	7
100.5	100.4	98.8	105.1	102.3	99.7	101.1	113	98.2	106.7	107.6	98.9	2452.7	1
114.2	112.9	113.6	96.5	96.3	100.2	98.2	110.7	111.4	103.4	106.5	96.6	2517.8	2
110	113.6	113.5	110.9	112.2	97.2	96.7	110.9	101.1	103	113.2	97.1	2515.6	3
115.1	115.6	115.6	114.1	105.3	98.8	100.5	114.6	114.2	102.2	112.7	97.1	2539	4
97.8	110.1	96.9	96.3	99.1	101.7	101.3	96.2	102.7	103.1	106.5	97.7	2427.3	5
100.2	100.3	100.2	100.6	102.8	99.4	106.2	104.5	98.8	106.4	108.8	97.1	2456.5	6
103.3	103.8	102.8	102	101.6	108.3	108.3	102.2	106.7	104.7	98.6	97.5	2466.5	7
110.5	110.8	113.6	111.4	112.5	113	114	113.7	114	110.1	103	106.8	2587.4	1
110.8	113.8	109.5	113.9	111.9	111.9	112.6	116.3	109.2	113.5	96.7	109.4	2603.1	2
113.8	113.7	112.9	114.5	113.9	113.8	113.8	113.9	110.8	110.9	96.7	109.8	2622.1	3
109.5	113.8	110.6	113.2	113.8	109.5	111.6	110.6	113.2	113.4	98	110.9	2597.1	4
113.2	113.2	113.8	113.2	111.3	109.2	109.5	113.8	113	111.6	103.4	105.7	2599.4	5
114.2	112.5	109.8	111.3	111	110	111.8	108.9	113.3	109.4	98.2	108.7	2606.8	6
109.6	113.3	110	115.5	110	114.3	109.3	110.9	110.3	112.3	100.9	112.5	2591.4	7
115.7	114.1	117.4	114	117.2	114	114	114	114	111.7	100.1	105.4	2614.3	1
114	117.2	118	113.3	114	114	112.6	118.7	110.2	98.7	100.6	104.8	2608.7	2
119.5	118.8	114	116.6	113.9	113.3	110.9	114.1	112.6	112.2	98.8	111.9	2622.6	3
119.5	114	113.9	115.9	113.3	114	114	117.4	110.9	114.2	99.3	102.9	2601	4
111.1	114	114	112.6	114	113.3	110.9	113.9	112.5	110	98.8	106.4	2579.5	5
113.8	112.1	110.7	114.4	113.1	113.6	112.8	109	112.7	111.8	103.4	108.9	2613.4	6
109.2	98.4	109.2	113.9	113.8	110	115.5	113.9	114.2	113.5	102.2	105	2574.6	7
113	110.2	113.3	112.5	108.8	115.2	109.5	116.8	117.4	112.9	104.6	108.7	2618.3	1
117.4	115.2	115.2	116.6	113	110	112.1	117.4	117.4	112.9	97	110.1	2634	2
108.8	113.1	115.2	117.3	117.1	113.6	114.9	114.4	114.3	113.5	98.7	109.8	2624.4	3
114.5	116	114.2	113.3	111	109.3	109.4	109.3	115.2	110.1	104	108.5	2614.3	4
114.2	109.3	113	116	112.7	113.5	112.8	112.8	112.4	112.2	107.8	109.1	2632.7	5
113	109	108.8	113.6	112.1	110.3	114.4	110.1	111.7	110.1	99.1	108.6	2586.2	6
108.9	113.3	115.4	114.3	113.1	110.5	108.9	112.2	114.1	111.3	99.3	111.8	2595.5	7
120.9	120.1	122.8	124.2	120.5	120	120.1	120.2	120.2	118.6	111.1	100.8	2745.2	1
124.2	124.2	125	120.2	120.3	120.5	125	122.6	120	112.1	113.8	102.5	2787.9	2
120.1	120.2	120.2	120.5	120.5	120	120.2	125.5	122.9	119.9	111	103.2	2766.8	3
120.2	120.6	120.5	120.4	122.7	120	123.2	124.3	122.6	114.3	111.1	102	2756.7	4
122.7	120.2	120.2	124.2	120.1	120.1	120.5	125	117.1	120.1	111.8	99.1	2743.1	5
109.6	112.2	109.1	112.1	113	114.3	112.2	114.9	111	105.7	99.9	108.9	2591	6
110.5	110.7	109.5	109.2	110.4	111.2	112	111.7	110.4	110.5	102.2	104.8	2582.5	7
112.6	112.1	114.8	113	112.1	111.7	113.1	113.9	109.8	114.9	98.3	104.4	2591.9	1
115.1	110.7	113.9	114.3	111.3	109.1	113.4	118	113.9	110.2	107.2	109.1	2614.1	2
116.8	114.7	114	110.7	109.3	114.1	112.7	116.4	114.6	110.8	103	112.4	2624.1	3
116.6	114	116.9	113.1	110.7	112.6	110.7	113.7	112.6	111.6	103.3	108	2649.6	4
114.8	114.2	108.9	109.7	110.3	109.6	115.5	109.2	96.7	109.3	105.8	105.8	2569.7	5
109.5	112.9	111.5	111.4	110.2	110.9	112.2	111.9	115.3	109.5	108.2	109.1	2599.9	6
97.9	97.5	96.7	108.7	111.4	110	114.9	115.4	109	111.4	108.4	110	2547.4	7
112.3	111.7	111.4	112.3	112.9	112.2	113	110.6	105	109.3	100.1	100.6	2532.5	1
118.8	116.3	116.5	117.2	117.4	114	113.7	116.2	113.8	108.8	101	96.2	2602.1	2
114.6	113.1	115.6	118.7	113.9	113.9	115.4	116.2	117	109.6	98.6	100.5	2593.1	3
112.5	109.2	113.8	113.8	111.9	114.6	113	120.2	112.4	113.5	102.6	97.6	2585.9	4
115.6	113.7	119.4	112.7	113.3	110	110.4	109.9	111.1	115.6	103	100.6	2570.6	5
112.1	108.8	110.9	114.3	112.2	112.1	112.2	111.8	115.4	110	99.3	97.1	2546.5	6
109.9	109.4	105	112	112.2	111.5	110.2	115.3	113.5	105.6	97.6	98.9	2507.1	7

13	14	15	16	17	18	19	20	21	22	23	24	SUM	DOW
111.7	113.3	113.2	108.9	98.1	100	100.2	109.2	96.6	102.2	112.9	96.8	2467.9	1
98.8	98.6	97	107.8	111.2	98.2	97.5	111.1	100.6	103.8	107.9	98.7	2431.4	2
97.1	97.3	108.9	111	111.7	109.5	97.3	110.5	98.1	100.7	112.5	96.3	2472.1	3
107.8	113.8	111	111.9	109.2	97.4	98.1	115.2	109.2	99.3	109.5	103.4	2502.3	4
100.5	98.6	99.3	101.1	99.9	103.2	104.1	97.4	103.2	108.3	112.1	103.8	2465.9	5
100	98.6	99.1	100	103.2	103.3	97.7	98.9	104.5	105.6	104.7	96.4	2431.7	6
101	106.8	108.2	106	104.4	101.6	100.4	99.8	103	108.4	96.2	97.9	2438.7	7
109.6	112.6	110.2	107.8	106.2	98.9	100.1	114.7	112.4	100.3	111.7	101.2	2499.5	1
113.8	113.8	110.4	108.9	97.9	101	101.6	113.1	100.5	102.4	113.2	96.1	2511.3	2
99.2	98.6	99.7	97.4	97.7	100.2	99.8	109.6	97.2	103.4	103.1	98.2	2417.5	3
97.4	103.7	101.9	101.9	102	103.7	104.2	109.5	99.9	103.2	100.1	97.5	2445.3	4
103.2	96.7	111.6	96.3	97.7	102.2	104.4	97.5	101.9	102.1	112.1	103.6	2447	5
98.8	97.7	97.3	104.1	102.2	101.9	103.6	97	103.2	103.8	112.3	103.2	2440.3	6
106.4	106.8	104.2	102	99.7	97.7	103.4	110.3	99.2	103.8	109.5	96.3	2462.8	7
111.2	113.8	110.6	110	109.3	113.8	109.5	113.3	109.4	101.4	106.7	100.2	2566.9	1
109.8	110.6	110.6	115.1	113.3	110.9	102.1	113.8	110.7	104.4	111.4	96.5	2559	2
110.7	110.5	109.4	110.7	109.6	96.8	99.3	112.6	97.7	102.8	111.8	103.7	2487.5	3
111.4	114.7	109.3	111.1	112.1	115.3	109.3	109.1	114.7	104.4	109.1	100.9	2541	4
112.2	114.2	114.9	111.6	109.4	98.6	98.6	99.1	98.8	99.8	112.5	105.3	2519.8	5
100.6	99.4	98	99.8	98.2	97.8	99.8	96.6	99.5	99.6	105.7	99.2	2413.9	6
104.7	103.3	102.9	102.4	101.5	101.4	101.4	113.5	96.8	99	107.2	98.4	2442.4	7
111.3	110.6	114.6	114.6	115.4	110.9	108.8	114	112.1	99.5	110.2	103.1	2561.1	1
108.9	113.8	111.2	109.9	113.2	110.1	111.5	113.3	110.8	98.8	111.1	98.6	2566.9	2
113.9	109.1	114.5	110.4	114.2	112.2	105.7	113.4	108.8	104.6	112.1	97.1	2562.9	3
113.5	114.1	113.5	112	113.6	110.8	107.2	109.4	112.1	103.6	106.2	98	2547.7	4
114.2	115	110.1	113	111.4	114.2	108.8	115.1	110.5	104.7	109.8	113.3	2573.5	5
99.6	97.8	96.9	97.1	100.2	100.2	110.5	115.6	99.2	98.1	111.1	108.5	2449.7	6
101.5	99.9	101.5	101	99.1	96.4	104.3	115.1	99.2	100.9	105.2	98.8	2424.5	7
111.1	114.3	111	110.8	111	113.4	113.5	113	113.4	98.4	108	112.6	2579.8	1
111.7	114.3	115.8	111.6	114.1	112.4	110.4	109.4	113	101.6	110	108.3	2584.2	2
114.8	113.3	112.9	114.3	110.3	115.4	115.5	115.1	115.4	97.1	105.7	111.4	2587.4	3
112.8	115.4	110.3	111.7	111	112.6	112.4	112.8	110.3	100.4	110	101.7	2585.3	4
111.6	113.3	115.5	114.1	111.6	114.2	97.6	111	110.4	99.5	110.7	104.5	2550.8	5
100.4	98.6	98.8	97.2	109.3	110.1	105.8	111.7	101.5	101.3	106.3	96.4	2453.7	6
99.2	98.4	103.3	104.1	101.9	100.1	98.6	115.7	100.6	102.3	107	98.8	2452.6	7
110.8	109.9	110.6	109.8	109.7	113.5	114.1	112.3	112.9	101.6	110.5	101.6	2574.3	1
109.8	109.3	111.8	112.8	112.4	103.2	97.1	109.7	110.7	97.5	104.6	105.3	2531.9	2
110.1	111.2	111	112.3	112.9	110.5	100.8	114.3	113.5	96.9	112.5	96.4	2534	3
111.6	115.3	111.3	114.6	114.5	97.1	97.6	113.5	110.7	97.1	111	108.5	2552	4
113.4	113.4	114.2	111.4	114	107.4	113.4	114.7	102.5	100.7	109.7	111.1	2544.7	5
99.4	98.5	98.5	99.2	98.9	100.5	103.2	98.3	104	105.2	109	98.8	2435.5	6
101.6	99.2	97.6	103.8	102.1	102	101.5	113.4	99.4	106.2	110.8	100.1	2475.8	7
110	115.3	110.7	110.2	110.9	111	110.7	109.9	110.7	98.9	108.8	99.1	2555.3	1
111.7	112.8	112.7	97.2	98.5	103.5	114.1	109.4	98.2	102.3	111	102.2	2502.5	2
111	110.2	110.7	115.4	109.4	96.7	96.8	113.8	111.3	100.5	108.7	99	2520.1	3
114.1	111	112.2	112.2	110.7	96.8	111.4	112	110.7	98	107.2	97.9	2527.8	4
112.2	111	110.9	109.4	113.1	104.3	99.1	108.9	110.3	104.5	109.3	112.4	2535.6	5
98.1	98.5	104	102.6	109.7	98.8	99.1	97	97.2	107.1	109.5	97.5	2431.4	6
103.7	105.1	105	104.4	102.3	99.7	102.8	109.1	100.9	104.8	111.5	101.2	2473.4	7
115	109.8	112	115.3	111.1	112.9	111.2	111	115.1	106.8	109.3	110.2	2545.4	1
112.9	113.8	109.1	113.8	112.7	109.9	111.7	113.9	115.1	98.5	108.6	110.2	2578.9	2
109.1	114.2	114.2	110.8	109.7	114.5	113	115.5	109.3	97.2	107.8	109.3	2568.3	3
114.2	113.2	114.3	111.6	112.3	113.1	110	114	111.2	98.6	107.9	110.9	2566.3	4
109.9	111	112.8	111	110.8	111.2	114.3	112.3	111.4	98.1	103	105.3	2556.2	5
112.6	111.6	109.6	110.3	100.8	97.4	108.9	109.2	110.1	104.3	108.5	108.8	2502.4	6
100.8	111.9	100	100.3	100.6	103.6	111.2	110.5	99	97.2	108.6	108.4	2472.7	7
115.1	109.7	111.9	115.4	111.1	112.9	111.2	110.9	115.3	106.9	109.3	110.2	2545.8	1
109.8	109.6	110.7	111.7	111.9	115.4	111.2	113.6	112.1	103.3	111.9	113.2	2586.7	2
109.2	112.5	109.3	110.7	111.9	112.7	111.2	113.8	115.2	96.6	111.7	112.6	2578.2	3
115.2	114.4	111.1	114.2	114.1	114.1	110.6	110.3	113.1	101.1	110.8	113.1	2591.8	4
114.8	111	114.9	112.9	110.7	115.3	112.5	109.7	109.2	101.4	107.6	111.8	2566.4	5
115.1	113.4	110.7	112.7	110	112	109.5	111.2	103	96.8	107.4	95.9	2535.1	6
100.7	98.9	98.1	97.9	100.6	96.7	114.8	111	98.7	98.3	112.1	112.8	2468.9	7
113.5	114.2	113.4	109.7	109.7	112	111.1	115.6	111.9	104.1	112.3	111.9	2578.4	1
111.1	112.8	112.3	115.5	112	111.2	111.6	118.5	111.8	97.7	107.9	110.2	2571.5	2

13	14	15	16	17	18	19	20	21	22	23	24	SUM	DOW
113.3	112.5	114.9	112.7	112.6	109.3	111.3	113.2	111	103.4	109.3	111.8	2558.7	3
111.2	113.3	114.7	112.7	104.6	99	109.8	114.3	110.2	99.2	112.3	112.6	2569.3	4
111.1	110.5	112.6	109	97.4	110.8	111.4	114.7	99.5	102.5	111.3	111.1	2546.2	5
100.5	98.5	100.1	98.9	98.3	97.6	104.4	115.4	97	108.6	108.2	111	2440.7	6
100	98.6	98.7	98.6	96.7	103.4	109.1	114.4	98.3	108.2	110.1	96.8	2450.1	7
114.1	115.2	112.3	108.9	107.6	98.7	111.2	109.9	111.1	100.4	107.9	96.7	2543.6	1
113.7	109.8	109.8	109.2	110.6	96.7	111.1	114.2	109.5	107.8	107.3	100.5	2533.9	2
112.7	111.2	112	111.8	108.8	104.5	112.5	108.9	99.1	102.4	106.7	106.2	2537	3
109.7	115.2	111.6	114.8	109.8	98	113.2	111	113.4	104.7	111.6	111.4	2569.3	4
111.7	112.8	109.1	114	111.6	97.5	109.1	109.1	97.2	99.9	110.3	109.8	2526.1	5
115.3	111.3	111.1	110.6	112.5	109.6	114.9	114.9	115.2	101.3	109.3	109.6	2557.8	6
107.6	113.8	110.6	96.2	109.3	109.5	112.5	109.2	101.6	104.5	104.7	112.6	2502.5	7
97.1	98.1	110.7	96.5	99.5	101.9	110.4	113.8	97.3	105	98.5	97	2448.2	1
101.6	101.5	101.2	102.7	103.3	98.3	96.6	108.9	100.4	104.1	112.2	98.3	2436.2	2
112.6	110.3	109.6	98.4	97.9	100.1	115.6	114.7	96.8	105.8	105.5	103.6	2505.6	3
111.8	109.6	96.7	100.3	97.9	98	99.8	113.4	99.7	100.7	104.6	102.3	2459.5	4
98	111.8	113.5	109.8	100.9	96.7	110.3	99.7	102.5	105.2	96.7	102.5	2471.5	5
103.5	101.9	97.4	104.4	97.6	98.1	98	98.5	104.3	106.7	108.8	101.5	2435.2	6
100.5	99.4	101.6	99.4	99	99.9	111.3	111.4	100.8	104.7	109.5	98.8	2471.9	7
110.7	109.8	97.1	100	107.5	101.9	111.4	114	102.3	103.6	99.5	97.5	2486	1
99.2	110.4	111	99	102.5	96.9	110.6	115.4	99.8	107.1	100.9	101.2	2456.3	2
98.5	113.2	100.2	111.7	97.8	98.4	110.3	110.1	98.6	106.9	97.5	102.9	2466.8	3
103.6	111.2	98.7	97.3	98.9	98	111.4	110.5	96.4	103	112.8	97.3	2466	4
102.2	105.1	110.8	111.9	102.5	101	109.4	109.2	101.4	103.2	96.1	102.9	2479	5
103.3	101.8	100.2	99.3	104.3	102.9	111.1	97.7	98.8	109	109.6	103.4	2481.6	6
100.8	107.4	106.5	104.5	100.4	97.1	100.9	101.2	98.5	101.1	110.7	97.4	2449.8	7
111.1	110.3	114.7	111.2	114.6	109.8	112.7	111.8	96.8	106.3	108.9	96.2	2550.8	1
109	110.6	113.4	112	114	111.9	109.5	112.7	97.3	107.2	96.1	96.2	2522.9	2
111.7	106.4	111.2	111.2	110.2	96.3	113	113	98.4	108.8	109.8	96.8	2508	3
97.3	110.7	109.6	109.8	96.2	97.3	109.1	113.9	96.7	101.2	108.7	96.9	2463.7	4
97	110.5	101.1	109.5	113.2	100.5	113.9	109.6	104.8	106.3	108.2	99.6	2500	5
106.6	104.4	103.3	101.7	98.7	100	113.2	99.3	104.6	109.6	110.3	98.8	2483.4	6
101.4	103.1	98.3	97.2	111.3	109.8	112.5	113.7	98.2	101.4	100.9	103.6	2475.8	7
112.9	111.4	110.9	109.5	112.1	110.3	116.2	113.8	109.3	106	102.6	103.8	2568	1
99.7	98.4	109.6	111	108.8	104.9	113.8	115	97.1	102.1	109.6	97.7	2497.7	2
109.2	110.1	96.2	110.3	110.3	109.6	116.7	113.8	107.8	105.4	104.1	101.2	2534.9	3
109	110.7	113.8	113.8	111.7	96.2	109.6	119.5	109.1	103.4	113.3	101.4	2549.6	4
112.5	114.4	115.5	114.1	112.7	110.6	115	111.8	98.9	100.8	113.3	101.2	2556.5	5
99.8	98.6	98	97.9	98.6	96.2	109.1	101.5	111	107.6	108.7	96.5	2449.1	6
108.1	110	110.2	107	102.4	101.6	109.8	97.5	104.9	111.6	96.3	101.2	2484.9	7
103.4	112.5	109.1	111.9	98.5	96.8	113.6	110.3	97	102.5	111.2	99.1	2500.5	1
111.1	111.9	97	115.2	109	112.5	113.8	111	96.5	100.7	110.8	99.6	2520.3	2
96.8	108.1	109.1	108.8	113.8	108.9	112.9	110.2	97.7	102.1	110.8	98.4	2508.1	3
96.4	97.9	110.4	98.2	109.7	106.4	109.5	113.5	96.6	101.8	96	96.3	2445.5	4
97	110.7	96.9	106.4	101.9	113.8	100.6	98.7	101.3	107.2	98	98.3	2457.1	5
103.4	104	105.7	103.2	101.4	96.6	111	103.2	107	104.4	110.5	101	2476.4	6
103.5	102.6	102	101.3	104	106.8	109.4	100.5	109.1	105.8	96.1	98.5	2472.6	7
107	108.9	111.7	109.7	110.3	111.1	96.7	102.4	103.3	105.9	112.1	96	2513.8	1
114.8	114.8	96.4	109.2	97.4	98.9	116.1	112.3	96.4	101	96.6	99.9	2470.9	2
97.1	106.8	103.8	109.7	108.4	111.9	113.1	110.2	97	108.7	96.5	96.2	2496.5	3
96.6	111.1	97.2	100.3	100.8	98.2	112.5	112.9	97.1	101.7	100.9	96.4	2456.3	4
97.3	102.5	96.8	96.6	99.3	99.4	112.3	111.9	102	103.3	113.1	102	2457	5
107.1	108.6	108.4	107.8	106.1	99.6	109.9	101.8	106.9	108.7	96.4	103.4	2497.5	6
102.2	102.1	102.3	102.4	101.9	103.6	110.7	98.4	102.7	107.9	110.2	98.7	2470.3	7
98	97.4	97	97.3	98.3	96.1	112.5	114.9	99.1	104.5	97.3	102	2432.5	1
97.6	97.3	99.6	99	98.5	97.5	113.8	113.7	97.2	108.2	102.6	96.4	2440.3	2
97.4	98	96.6	96.6	98.1	102.3	114.1	108.8	103	102.3	96	98.8	2437.3	3
98.2	97.8	98.7	98.9	100.3	97.6	109.5	111	106	103.7	108.8	97.1	2455.8	4
103.2	104.6	103.8	101	98.9	97.7	111.4	97.5	100.3	104	96.2	97.2	2423.9	5
102.6	106.1	108.7	105.6	102.2	97.5	114.3	98.5	102.2	107.2	99.4	96.2	2468.8	6
103.3	101.6	100.7	100.7	106.2	98.6	110.3	97.7	103.9	105	96.8	99.5	2447.6	7
97.6	96.8	97.1	97.9	98.7	111.4	111.6	111.5	100.9	107	112.5	98.7	2463.8	1
110	105.3	110.3	98.3	100.2	98.6	115.2	110.7	98.1	101.9	96.6	97.5	2451.6	2
99.5	101.6	96.8	98	100.9	97	111.4	114.3	103.4	101	110.2	97.9	2465.9	3
98.7	99	97.8	100.2	101.8	97.2	112.4	111.8	104.5	102.3	108.5	100.2	2465.8	4

13	14	15	16	17	18	19	20	21	22	23	24	SUM	DOW
102.2	103.3	101.7	101.5	103.7	98.3	111.9	99.9	99.8	103.6	100.1	100.4	2448.4	5
106.8	104.1	107.1	102.8	102.7	98	102.4	98.6	101.5	104.7	96.4	98.5	2455	6
101.3	102	107.5	103.6	102	98	112.4	109.9	99.9	106.3	110.3	97.1	2473.6	7
97.6	96.8	97.1	97.9	98.7	111.4	111.6	111.5	100.9	107	112.5	98.7	2463.8	1
110	105.3	110.3	98.3	100.2	98.6	115.2	110.7	98.1	101.9	96.6	97.5	2451.6	2
111.8	96.3	97.3	97	109	112.2	117.4	114.4	111.6	96.5	107.2	99.3	2508	3
98	98.2	101.2	101.2	100	103	101.4	107.8	108.8	105.8	110.7	97.3	2462	4
97.6	97.3	97	96.2	98.6	109.9	114.4	99.3	107.2	110.8	111	101.5	2448.3	5
105.3	105.9	107.3	102.4	102.7	108.8	109.3	96.5	105.8	109.3	109.3	98.5	2484.6	6
107.9	109.2	110.8	109.2	105.3	109.1	115.5	97.3	107.4	108.9	112.9	96.1	2516.9	7
101.9	98.3	100.8	103.1	97.3	101.4	112.5	109.2	105.6	109.5	112.1	99.7	2467.7	1
97.5	98	105.5	102.6	103.8	97.5	114.8	112.7	105.1	110.8	104	101.9	2473.9	2
101.3	97.9	97.1	97	98.7	99	113.8	112.4	101.7	109.4	110.3	98.7	2458.9	3
96.8	98	98	98	99.1	97.2	112.6	112.6	99.5	101.9	108.3	98.2	2456	4
100.6	97.7	97.9	96.9	98.4	107.5	111.2	113.7	105.2	101.9	112.4	96.7	2485.4	5
103.2	100.6	108.4	108.1	107.4	100.9	107.8	103.3	106.8	106.8	108.4	96.2	2484.6	6
109.1	111.1	110.2	108.2	104.3	99.2	109.7	98.2	104.9	107.3	111	100.8	2503.7	7
102.5	100.6	101.3	103.4	105.1	98.3	113.9	99.6	97.4	102.3	102.1	101.9	2440.1	1
105.6	105.3	105.2	106.1	107.1	103.2	114.5	99.1	105.2	108.3	112.2	100	2497.7	2
104.7	101.1	100.9	103.4	102.4	100.4	96.8	98.5	104.2	108.8	110.3	99.6	2469.9	3
106.7	103.1	103.1	103.2	103.8	98.4	112	96.8	101.9	103.7	108.8	97.2	2466.8	4
104.7	105.3	103.8	103.2	103.1	98.6	110.4	96.7	101.6	108	99.3	96.5	2487.1	5
108.2	109.8	108.9	108.2	105.2	106.9	100.2	101.5	101.2	111	110	98.4	2505.1	6
112	110.5	112.6	110.5	107.3	105.8	111.7	98.5	104.3	111.1	111.8	102.1	2534.6	7
101	108.4	107.3	107.6	107.2	102.7	109	97.4	105.3	103.4	103.3	99	2474.2	1
102.1	103.5	109.6	104	103.5	108.2	109.8	104	104.7	104.6	110.2	102.3	2496.3	2
104.8	102.8	108.2	100.8	101.5	104.1	109.2	99.9	104.4	108.2	111.6	101.6	2493.4	3
104.7	104.4	102.8	101.8	101.6	104.3	114.5	99.8	103.4	105.2	110.5	100.3	2491.4	4
103.2	102.2	102	102.4	101.8	105.3	99.3	101.4	108.2	112.3	97.6	99.7	2449.3	5
110.9	106.8	113	111.9	109.1	102.5	101.9	99.9	104.2	111.4	112.6	98.9	2513.1	6
110.1	110.2	107.4	106.7	109.8	105.9	103.2	98.2	100.2	108.1	113.1	101.2	2506.3	7
106.1	104.9	103	103.8	104.8	101	110.2	98	97.3	106.2	98.9	100.3	2471.2	1
103.2	102.7	100.6	100.8	98.7	100.5	110.1	114.6	96.7	99.2	96.1	96.1	2435.2	2
100.9	100.5	97.7	97.1	104.8	98.6	115.1	113.9	96.7	102.5	111.3	103.3	2469.4	3
100.9	100.9	112.4	109.8	106.6	107.1	103.1	107.4	108.8	103.2	112.7	99.7	2492.8	4
106.3	106.1	106.1	107.1	107.8	100.4	109.3	99.4	103.7	101.3	112.6	103.4	2479.7	5
108.4	107.6	108	104.8	107.1	102	97.2	102.6	106.9	110.6	96.4	103.5	2474.4	6
100.9	100.9	112.4	109.8	106.6	107.1	103.1	107.4	108.8	103.2	112.7	99.7	2492.8	7
106.1	107.2	106	104	108.6	98.6	111.2	111.9	96.6	102.8	96.1	103.6	2462.6	1
99	100.1	101	101.3	98.7	99.9	113.8	115.6	111.5	100.6	102.2	101.5	2461.4	2
103.6	102.7	104.7	101.5	103.1	113.2	108.8	114.5	96.2	100.7	104.6	103.5	2485.8	3

13	14	15	16	17	18	19	20	21	22	23	24
38,809	38,900	38,854	38,786	38,672	38,215	39,622	39,870	38,359	38,432	38,755	37,227
366	366	366	366	366	366	366	366	366	366	366	366
									38,432	38,755	37,227
									366	366	366
38,809	38,900	38,854	38,786	38,672	10,788	11,073	10,950	10,829			
366	366	366	366	366	104	104	104	104			
					27,427	28,549	28,920	27,530			
					262	262	262	262			
0.00	0.00	0.00	0.00	0.00	0.00	0.00	0.00	0.00	0.00	0.00	0.00
0	0	0	0	0	0	0	0	0	0	0	0

2009 Running Cost
Is this a leap year? n

Month	Day	Year	1	2	3	4	5	6	7	8	9	10	11	12
1	1	2009	108.3	94.3	93.9	97.6	100	94.9	100	94.2	106	101.4	96.2	96.2
1	2	2009	100.5	98.3	101.2	99.4	99	94.6	103.8	109.8	105.2	102.5	101.2	101.4
1	3	2009	108.3	94.3	93.9	97.6	100	94.9	100	94.2	106	101.4	96.2	96.2
1	4	2009	96.5	95.8	99.6	100.2	96	98.7	99.8	110	107.7	98.2	98	100.3
1	5	2009	95.7	100.2	93.7	99.4	98.1	95.1	99.2	109.5	104	98.6	97.4	99.2
1	6	2009	93.6	100.4	95.7	95	100	99.8	107	104.6	100.5	98.8	95.9	103.5
1	7	2009	95.8	99.6	93.6	94.5	100.9	96.5	108.3	104.9	101.5	99.8	95.8	96.2
1	8	2009	99.8	99.1	93.8	96.2	98.4	94.3	95.6	103.5	106.6	101.3	98.8	99.1
1	9	2009	100.5	98.3	101.2	99.4	99	94.6	103.8	109.8	105.2	102.5	101.2	101.4
1	10	2009	98.6	97.6	99.4	93.9	99.6	100.8	95.1	108.1	106.8	103.5	100.6	101.9
1	11	2009	97.9	96.3	98	99.2	96.9	100.4	96.2	96.2	105.9	100.6	101.5	100.9
1	12	2009	97.4	95.4	95	95.8	100.2	94.2	96.9	110.6	106.8	96.9	95.6	97.1
1	13	2009	96.4	101.3	94.9	94.8	99.6	96.2	96.9	104.4	100.5	99.4	96.1	96.1
1	14	2009	99.3	95.1	97	96.8	96.2	97.9	107.7	106.4	105.8	102.3	100.4	101.3
1	15	2009	97.4	93.5	96.2	95.2	100.8	94.4	110.5	108.4	105.1	103.2	102.6	95.6
1	16	2009	100.9	98.3	99.8	98.9	93.8	98.9	107.9	103.2	102.8	98.5	97	98.4
1	17	2009	95.9	101	96.2	94.2	99.5	99.8	94.8	109.2	107	102.7	102.6	101.9
1	18	2009	94	100	96.2	93.5	100.9	95.7	94.3	104.9	103.3	98.2	101.5	101.6
1	19	2009	100.5	96.1	100.9	100.6	97.4	96.6	107.2	102.7	103.4	108.7	111.1	110.1
1	20	2009	95.1	99.5	93.7	93.9	99.4	97.1	103.3	107.2	95.8	93.7	98.7	94.8
1	21	2009	101.1	99.3	97.8	97	96.8	101.1	108.2	105	102	96.8	96.2	96
1	22	2009	93.9	96.8	99.6	100.6	96.1	100.6	106.1	103	99.5	96.3	97.1	96
1	23	2009	100.1	96.4	99.2	100.6	95.7	97.5	102.4	105.6	97.9	94.2	97.6	95.4
1	24	2009	101.1	100.4	94.5	94.8	100.3	94.1	93.8	106.3	110.5	106.5	105.2	105.1
1	25	2009	96.2	101.3	94.8	95.6	95.5	95.7	95	94.5	104.8	100.4	103.7	102.5
1	26	2009	101	100.2	100.1	100.9	97.4	93.9	109	107.7	101.9	97.6	95.4	94.3
1	27	2009	99.7	96.9	100.4	100.7	97.7	100.2	108	107.9	101.9	96.7	94.8	97.8
1	28	2009	100.9	99	101.2	93.7	98.4	95.5	109.6	108.8	103.2	99	94.3	94.3
1	29	2009	99.1	97	99.5	100.2	95.9	101	108.5	106	100.5	100.5	98.7	96.2
1	30	2009	98.1	96.2	100.3	100.6	98.1	95.3	110.2	108.9	103.8	98.6	95.6	95.3
1	31	2009	99.7	97	99.8	100.9	99	100.3	100.3	109.1	108.9	102.9	99.9	99.4
2	1	2009	97	94.3	96.5	97.5	97.1	100.1	110.5	103.2	102.3	101.8	106.7	102.1
2	2	2009	97.5	94.3	96.7	95	95.1	99.7	107.6	105.9	100.2	97.2	100.6	98.2
2	3	2009	96.7	99.5	95.2	95.7	95.9	100.7	108.3	105.1	101	102.2	99.7	99.5
2	4	2009	101	95.8	98.2	95.7	95.7	100.6	108.8	106.1	103	103	100.2	100.1
2	5	2009	101.2	97.4	95.1	95	96.4	99.1	110.1	107.9	105.2	105	101.9	102.7
2	6	2009	98.3	96.5	98.6	98	96.6	94.3	109.2	105.7	101.9	100.5	97.9	97.6
2	7	2009	97.9	93.7	97.7	97.5	95.7	98.6	95.4	102.1	108.8	104.2	101.6	99.9
2	8	2009	95.7	99.1	95.9	97.1	97.8	99.9	100.6	99.3	108.3	104.2	103.3	98.1
2	9	2009	95.9	100.8	95	96	93.9	99.2	107.6	104.5	104.7	100.7	96	107
2	10	2009	97.5	99	99.9	94.2	100.9	98.6	108.6	109.8	103.7	96	94.2	95
2	11	2009	95.8	99.5	93.6	94.7	96.7	99	94.3	110.6	100.8	99.3	96	96.1
2	12	2009	98.7	100.6	94	94.3	100.9	99.1	108.2	104.2	106.3	97.2	93.9	95.2
2	13	2009	96.3	100.7	95.6	96.5	95.4	101.1	110.1	107.2	101.1	100	98.5	96.9
2	14	2009	97	93.6	97.5	98.5	97.7	100.4	98.4	95.9	110.4	102.1	99.3	99.5
2	15	2009	97.4	94.7	98.2	95.5	98.4	95.2	100.6	99.2	110.4	108.6	105.5	105.3
2	16	2009	93.6	97	95.5	97.2	97.6	96.4	100.1	110.4	105.5	99.1	99.6	100.1
2	17	2009	100.6	97	94.9	95.1	97.6	94.2	101.6	108.1	102.3	98.1	98.3	99.7
2	18	2009	97.3	95.5	98	97.5	97.6	95.7	106.4	108.9	105.5	98.1	98.7	96.8
2	19	2009	99.2	94.3	97.2	96.5	96.9	94.1	108.5	108.4	102.9	97.1	95.5	97.4
2	20	2009	98.9	93.6	96.5	97.6	94.8	94.3	110.3	107.6	102.7	98.9	95.8	98.1
2	21	2009	95.8	100.9	95.6	97.2	96.7	100.3	97.4	93.8	104.4	101.6	101.4	102.4
2	22	2009	99.7	95.5	98.2	97.5	98.1	98.3	98.3	100.6	105.7	109.6	106.3	105.8
2	23	2009	99.5	96.1	97.8	94.8	98.4	99.6	95.6	95.3	106.6	101	105.6	106.7
2	24	2009	100.2	96.4	98.6	95	96.9	95.7	97.2	105.7	106.1	103.4	100.4	99.9
2	25	2009	97.3	94	97.2	97.9	95.4	99.8	110.6	108.5	102	98.8	97.1	97.7
2	26	2009	97.2	95.1	96.4	96.7	94.6	99.3	93.9	107.3	106.7	99.7	95.4	94.7
2	27	2009	96.3	99.8	96.3	96.8	95.2	100.2	108.6	107.1	106.3	95.8	95.3	94.4
2	28	2009	96.5	101.2	96.5	98.2	96.8	100.1	95.4	94.5	103.5	106.9	100.9	103.9
NA	NA	NA												
3	1	2009	96.7	93.6	98.4	95	97.6	99.3	97.9	96.6	108.1	105.7	99.9	107.3
3	2	2009	99.1	95.4	98.4	94.9	97.5	100.6	102.1	106.8	105.6	103	99.8	100.3
3	3	2009	100.6	96.5	95.3	95.1	95	93.6	94.5	106.8	106.4	103.9	103.4	101.8

2009 Running Cost
Is this a leap year? n

Month	Day	Year	1	2	3	4	5	6	7	8	9	10	11	12
3	4	2009	99.7	97.4	94.3	93.8	97.6	95.1	108.5	110.3	105.2	102.8	102.8	103.4
3	5	2009	99.1	97.1	98.2	95	98	100	109.5	107.9	103.6	104.7	100.8	99.6
3	6	2009	95.5	94.6	95.3	95.1	98.6	101.1	108.4	108.3	104.6	102.8	100.9	99.9
3	7	2009	95.6	95.1	97.1	98.6	96.3	96.2	101.1	109.6	108.1	104.6	102.3	103.1
3	8	2009	97.5	100.4	95.9	98.6	97.6	99.2	99	99.2	107.6	104.4	101.8	101.7
3	9	2009	97.8	94.4	98.2	94.8	96	99.1	93.9	104.5	106	96.2	96.4	96.1
3	10	2009	99.6	98.3	93.7	95.7	100.9	95.8	110.2	106.6	98.8	94.3	93.7	93.8
3	11	2009	94	99.4	97.3	99.1	97.1	101.1	105.6	103.6	99.8	95.8	94.5	94.6
3	12	2009	96.6	94.1	98.6	95.7	95.5	99.4	95.9	103.4	101.9	102.2	103.5	105.1
3	13	2009	93.6	96	92	89.4	95.3	94.1	108.4	107.9	104.9	107.2	104.8	105
3	14	2009	99.3	96.5	98.3	93.3	98.6	100.2	97.6	94.4	105.4	101.3	106.4	106
3	15	2009	95	95	0	0	91.1	95.6	96.5	95.3	107.6	103.7	110.6	110.6
3	16	2009	95.5	90.1	17.5	0	92.2	96.5	98.6	99.7	108.3	111.2	106.5	107.1
3	17	2009	97	92.3	17.5	0	94.7	95.5	97.4	96.9	105.4	112	108	106.7
3	18	2009	95.3	90.1	0	0	91.1	98.5	97.4	100.6	97.7	107	108.6	105.4
3	19	2009	96.6	95	26.3	35.2	92.8	95.5	99.3	99.1	101.9	106	107.2	106.4
3	20	2009	93.9	97.8	91.3	61.8	94.8	96.6	99.9	100.1	104.7	108.6	106.6	110.7
3	21	2009	98.8	95.3	95.5	94.8	95.5	100.5	97.8	93.7	94.4	106.5	106	106.7
3	22	2009	98.2	96.7	95.1	94.7	98.2	100.6	98	95.6	94.9	107.6	106.7	110.5
3	23	2009	100	95.5	92.3	94.9	97.6	95.9	93.6	110.5	100.7	99.8	97.2	97.9
3	24	2009	95.4	98.3	97.3	96.4	96.4	100.1	99.6	109.8	107.1	96.4	95.3	96.6
3	25	2009	100.4	98.6	94.5	95.9	100.8	98.6	104	109.2	106	97.6	93.6	95.2
3	26	2009	94.9	101.1	97.7	100.2	98.4	95.7	110.6	107.1	103.8	94.2	100.3	93.7
3	27	2009	95.9	96.2	99.7	95.9	96.2	98	101.5	109.6	105.7	95.1	104.6	100.2
3	28	2009	98.1	96.4	100.2	98.3	100	93.6	96.3	103.5	103.7	106.6	105.3	106.2
3	29	2009	98.8	96.4	97.2	93.7	97.2	100.3	100.1	97.3	107.8	106.9	104.5	106.1
3	30	2009	98.9	97.2	92.3	92.8	96.4	99.8	109.6	108.4	101.6	101.1	98.7	98
3	31	2009	95.5	93.8	97.5	96.9	96	97.9	102.2	103.5	104.9	97.6	96.2	97.6
4	1	2009	99.4	95.9	98.2	96.8	94.2	93.8	100.2	108.2	99.9	99.3	98.5	97.3
4	2	2009	99.8	96	98	96	94.4	93.6	108.6	110.6	101.7	101.6	97.9	99.6
4	3	2009	101	96	95.7	96.5	95.8	96.7	94.3	96	99.9	101	99.7	100.8
4	4	2009	95	97.5	95.7	95.1	94.5	96.8	101.2	108.4	103.4	100	101.1	102.1
4	5	2009	94.3	97.5	95.1	95.1	96.6	101.1	96.7	96	107.7	108.3	107.5	107.3
4	6	2009	95	100	100.5	100.5	94.1	107.8	105.2	98.9	96.3	109.9	110.1	111.9
4	7	2009	94.3	97.7	100	99.6	95.6	109.7	109.4	102.2	100.1	112.1	110.7	108.6
4	8	2009	95.6	97.9	100.2	99.1	96.8	108.2	100.6	96.9	108	106.7	112.1	110.7
4	9	2009	95.5	94.6	97.9	97.9	102.7	106.6	106.5	102.1	95.7	109.2	109.3	108.6
4	10	2009	110	93.7	107.3	96.7	108.5	105.7	97.5	108.8	110.9	112.6	112.7	110.9
4	11	2009	104.5	108.3	93.9	94.2	97.6	105.8	105.4	102.5	112.7	110.6	112.6	106.1
4	12	2009	106.5	94.3	96.8	96.9	94	109.5	108.1	99.7	93.6	107.2	106.1	109.3
4	13	2009	99.9	95	95.4	96.8	100.9	99.8	108.9	101.5	99.6	110.8	108.8	109.2
4	14	2009	97.8	100.4	96.6	95.4	100.8	97.8	110.2	104.4	98.8	97.9	94.3	95.7
4	15	2009	98.3	94.8	96	95.9	101.2	100	107.6	103.8	98.4	96.5	102.9	96.7
4	16	2009	98.7	94.8	96.4	98.4	93.9	98.5	108.2	106.9	98.4	94.4	111.5	110.5
4	17	2009	96.2	100	94.7	95.1	100.9	101.2	106.9	103	97.3	95.2	110.8	94.2
4	18	2009	94	99.8	95.1	96	93.9	98.5	96.5	109.2	100.4	96.1	99.3	99.4
4	19	2009	95	100.4	95.1	95.8	93.7	97.9	99.3	96.8	105.6	102.9	99.1	97.6
4	20	2009	98.6	101	95.9	95.5	99.4	109.7	109	104	99	97.1	102.9	99.4
4	21	2009	94	94.7	98.2	98.5	98.6	94.7	94.1	109.3	105.5	100	95.5	93.9
4	22	2009	98.8	95.2	98.5	98.4	100.6	94.3	110.1	107.6	101	101.2	96.8	95.7
4	23	2009	99.9	95.1	97	98.7	94.4	94.5	110.2	109.1	102.9	101.4	97.6	96.2
4	24	2009	98.3	94.8	96	98.4	93.7	94.9	95.1	108.5	102.3	97.2	98.7	97.3
4	25	2009	97.4	94.7	98.5	98.5	95.2	99.7	99.3	109.2	107.1	104.1	100.3	100.2
4	26	2009	99	94.7	99.1	99.6	96.2	100.9	94.6	95.7	107.1	104.2	106.6	105.1
4	27	2009	100.4	95.8	99.7	98.5	94.8	93.7	108.4	109.2	104	101.7	98.9	97.1
4	28	2009	100.8	97	100.4	99.4	94.1	94.5	93.6	108.5	103.1	100.3	96.8	97.5
4	29	2009	94.4	96.6	98.6	97.6	94.4	97.4	94.5	110	106.3	103.6	99.6	96.7
4	30	2009	96.6	94.4	96.4	97.8	93.6	98.2	93.9	109.4	103.1	103.6	103.7	104.8
5	1	2009	107.9	95	96.8	98.7	95.6	107.6	106	104.3	96.6	111.8	109.4	110.7
5	2	2009	109.3	94.3	96.6	97.8	96	105.6	105.2	109.7	101.5	98.7	95.9	95.2
5	3	2009	110.2	93.9	96.2	97.9	97.4	94.3	107.4	107	99.4	97.6	100.8	99.2
5	4	2009	107	95	97	98.3	96.3	108	107.8	104.2	96.7	108.6	108.8	106.6
5	5	2009	109.5	93.8	95.6	96.6	94.1	95.2	104.9	103.3	95.9	107.6	109.9	107.9

2009 Running Cost
Is this a leap year? n

Month	Day	Year	1	2	3	4	5	6	7	8	9	10	11	12
5	6	2009	108.3	103.3	94	94.9	101.4	106.3	103.8	102.4	99.5	108.6	112.3	111
5	7	2009	107.8	107.1	96.9	94	104.3	107.2	103.8	101.3	94.3	106.7	111.6	112.4
5	8	2009	97.5	99	101.1	93.6	100.4	99.2	100.1	108.4	99.5	98.8	99.9	97
5	9	2009	101.3	98.1	100.8	96	101.2	96.3	95.7	95.3	104	101.8	104.4	104.7
5	10	2009	94.2	100.5	94.1	95.9	95.2	98.6	100.8	100.2	100.2	110.3	106	104.7
5	11	2009	96.4	99.6	94.3	94.1	100.6	99.8	100	110.1	101.6	97.7	98.5	96
5	12	2009	97.9	93.6	96.3	96.3	93.6	100.6	103	110.4	101.7	100.4	96.2	100.9
5	13	2009	98.8	95.1	95.2	96.7	95	94.3	93.8	107.9	103.7	102.1	95.7	98.5
5	14	2009	95.7	99.6	93.8	94.6	95.9	100.6	101.5	108.2	99.6	100.2	96.2	100.3
5	15	2009	96.4	99.3	100.6	95.1	99.6	99.2	99.8	98.5	108.3	110.1	107.9	106.5
5	16	2009	98.7	99.1	89	94.8	98.2	98.4	95.5	93.7	95	99.4	109.1	106.5
5	17	2009	97.8	99.3	98.3	94.1	101.1	95.4	99.5	99.1	95.1	99.9	96.4	107.7
5	18	2009	97.6	99.6	95.1	93.7	96.6	94.1	98.9	96.7	108.3	111.1	114.7	113.8
5	19	2009	95.8	100.4	95.9	94.3	100.4	100	99.6	96.7	112.2	106.9	109.9	111.2
5	20	2009	93.6	98.5	95.5	95.7	99.8	99	97.5	95.2	106.3	108.9	113.6	114.2
5	21	2009	96.9	96.3	99.1	97.6	98.3	99.2	98.3	94.7	107.6	107.3	111	107
5	22	2009	98.1	101.1	94.1	96.2	93.9	100.5	110	108.1	101.5	100.8	96.5	97.8
5	23	2009	93.9	98.7	100.8	93.9	95.9	96.1	96.9	104.9	108.2	108.6	100.2	103
5	24	2009	98.3	98.4	101.3	94.6	98.3	98.2	99	100.1	108.5	105.4	106	100.4
5	25	2009	94	99.6	95.9	94.7	95.9	98.6	98.2	99.6	94	103.8	104.1	99.6
5	26	2009	95.1	98.4	100.4	100.3	99.7	97.6	110.4	104.1	102.7	95.2	93.8	109
5	27	2009	95.5	99	94.3	93.6	100.7	99	109.6	107.3	105.4	97	95	109.7
5	28	2009	95.6	99.9	101.3	94.1	101.1	99.6	109.3	106	104.7	96.6	94.2	99.7
5	29	2009	97.5	98.3	100.1	100.7	100.8	100.1	104	110	99.6	99.9	93.6	94.7
5	30	2009	93.9	98.7	100.8	93.9	95.9	96.1	96.9	104.9	108.2	108.6	100.2	103.1
5	31	2009	100.3	96.7	100	94.1	97.5	99.4	100.5	93.7	109.4	106.6	105.9	102.4
6	1	2009	106.9	99.7	95.9	97.1	95	110.5	108.6	107.3	101.9	99.8	105.1	108.9
6	2	2009	93.9	97.2	101.2	95	100.6	110.2	106.9	98.3	107.8	110.9	109.8	114
6	3	2009	110.5	96	99.3	100.2	98.8	108.1	106.4	100.5	109.1	112.2	111	111.1
6	4	2009	109.1	96.2	99.5	100	98.7	108.5	99.7	102	112.2	106.8	111	111
6	5	2009	109.1	96.5	99.3	100.2	97.4	106	104.8	99.6	106.4	108.7	109.8	114.3
6	6	2009	106.3	93.5	97.9	99	98.5	93.6	104.6	106.8	95.4	110.5	106.3	107.6
6	7	2009	110	107.5	105.6	95.6	99.2	107.1	107.3	104.7	97	96	112.1	107.9
6	8	2009	102.8	97.9	100.4	95.2	99.4	108.7	100	96.6	108.4	111	111.1	112.3
6	9	2009	103.3	98.2	99.2	101.3	98.6	109.3	100.9	94.8	108.7	111	110.5	113.5
6	10	2009	99.3	98.9	100.6	94.2	100.4	101.4	105.4	97.8	109.9	111.8	111.1	115.3
6	11	2009	104.7	96.5	100.9	97.6	93.7	106.2	103.3	96.4	111.7	111	111.1	114.6
6	12	2009	108.6	96.8	100.8	100	100.1	105.7	108.5	101.6	94	107.9	108.2	113.5
6	13	2009	109.9	96.5	100.1	99.2	100.4	93.8	106.7	102.6	95.3	109.1	110.1	108.4
6	14	2009	99	100	94.9	95.7	94.1	97.1	97.3	93.8	108.1	107.2	101.1	107.1
6	15	2009	98.6	97.8	98.5	95.5	101.4	109.9	104.2	96.4	109.7	106.2	112.3	113
6	16	2009	110	95.6	99.8	101.3	98.5	106.9	103.1	103.3	112.6	110.3	112.3	114.2
6	17	2009	110.1	96.2	99	100.2	97.8	109.1	102.2	96.1	106.5	109.6	109.8	108.2
6	18	2009	109.5	95.3	100	97.7	99.4	110.2	104.3	98	100.8	108.6	112.3	111.5
6	19	2009	109.1	94.7	98.1	99.6	97.6	107.7	101	102.6	107.1	112.2	114.1	114.2
6	20	2009	109.4	95.3	98.8	100.7	99.6	106.3	105.3	100.7	99.9	111.1	106.8	111.3
6	21	2009	110	108.5	101.4	95.1	95.1	107	104.6	102.7	101.8	94	108.4	112.2
6	22	2009	102.5	102	103.7	105.5	101.1	99	98.2	106.1	116.2	122.5	119.7	122.9
6	23	2009	103	101	104.2	105.6	103.7	101.5	111.6	109.7	116.9	117.1	119.8	117.1
6	24	2009	104.8	101.9	105.1	107.4	103.5	102	94.1	108.3	116.5	119.6	117.2	117.1
6	25	2009	102.5	100.3	103.9	105.3	102.3	99.6	93.7	107.1	113.6	117	117.1	122.7
6	26	2009	103	99.5	104.3	104.5	102.2	100.1	96.6	106.9	112.8	119.9	122	117.5
6	27	2009	99.6	105.8	102.5	104.2	103.6	104.6	102.3	112.2	110.9	117.1	113.6	117.1
6	28	2009	109.8	108.7	98.3	94.2	96.8	107.5	106.5	105.4	96.8	93.8	107.2	107.7
6	29	2009	101.1	97.8	97.5	94	99.2	98.8	110.5	105.7	104.5	102.8	97.8	95.1
6	30	2009	100.3	98.5	93.7	95.4	100.9	98.4	104.1	104.8	103.3	101.9	98.1	96.4
7	1	2009	95.4	99.6	101	101.2	99.7	98.3	98.7	100.3	99.8	96.3	108	104.8
7	2	2009	93.7	98.7	99.8	100.7	99.5	101.2	97.3	108	105.5	95.3	112.3	104.8
7	3	2009	94.3	98.7	94.3	100.9	99.4	95.7	99.3	97.6	101.4	97.5	95.2	101.8
7	4	2009	94	99.1	94	95.2	99.8	99.2	94.3	101.1	107.6	102.8	101.3	103
7	5	2009	94.2	98.1	94.2	95.2	101.1	98.4	101.2	94.8	94.1	109.8	103.5	102.8
7	6	2009	94	99.1	94	95.1	99.8	99.2	94.2	100.9	107.6	102.9	101.6	103.3
7	7	2009	93.6	97.9	93.6	99.5	98.8	99.8	99.8	109.6	107	94.6	103.2	111

2009 Running Cost
Is this a leap year? n

Month	Day	Year	1	2	3	4	5	6	7	8	9	10	11	12
7	8	2009	100.8	97.2	100.8	100.2	99	100.6	97.6	110.5	105.4	95.2	108.1	108.1
7	9	2009	100.7	97.4	100.7	99.4	97.5	99.6	98.2	110.3	100.4	96	106.7	94.8
7	10	2009	99	97.5	99	99.8	98.2	101	99.3	93.7	102.4	96.6	104.5	108.1
7	11	2009	99.9	96.4	99.9	98.8	98	94.2	98.7	94.4	104.1	105.5	98.4	97.1
7	12	2009	100.6	97.8	100.6	100.5	100	97.8	99	100.1	105	107.6	99.9	105.6
7	13	2009	94.2	99	94.2	100.9	99.5	97.5	100.3	101.7	101.6	96.9	108.7	107.5
7	14	2009	99	97.6	99	99.5	98.5	100.8	99.8	105.1	100.4	95.5	93.9	100.5
7	15	2009	100.6	97.4	100.6	99.4	98.4	100.7	99.7	97.4	103.5	96.5	95.5	103.2
7	16	2009	95.9	97.7	95.9	99.9	98.4	100.7	97.8	99	103.3	96.2	94.7	94.2
7	17	2009	100.7	96.7	100.7	98.9	97.6	99.2	98.9	99	105	98.6	94.2	94.4
7	18	2009	101.2	97.2	101.2	100.3	99.2	96.2	98.9	95.3	105.4	106.7	99	97.5
7	19	2009	100.6	97.8	100.6	100.3	99.5	96.8	101.2	100.6	102.7	105.9	100.1	106.6
7	20	2009	96	98.5	96	100	98.5	98	99.8	103.1	106.4	94.8	107.5	108.3
7	21	2009	100	96.7	100	99.4	97.7	99.9	99.5	102.7	99.7	95.9	108.6	106.9
7	22	2009	100.6	97.5	100.6	99.9	98.2	100.4	99.8	94.5	103	98.6	96.3	95.7
7	23	2009	93.6	98.2	93.6	100.7	99.1	100.6	99.8	107.5	105.5	99	96.4	95
7	24	2009	93.7	98.8	93.7	100.6	99.2	95.2	99.2	95.5	103.1	96.4	111.5	112.3
7	25	2009	100.7	97.8	100.7	100.9	99.8	97.3	97.9	97.1	105.5	106.4	98.9	98.5
7	26	2009	99.8	96.7	99.8	100.3	99.8	96.7	99.8	99.5	110.5	104.8	105	103.7
7	27	2009	98.8	96.8	98.8	99.4	97.9	100.5	97.1	107.9	102.6	110.1	109.1	111.9
7	28	2009	97.9	93.8	97.9	97.4	96.1	97.1	93.9	108.3	102.6	95.1	110.9	110.4
7	29	2009	100.4	96.8	100.4	99.4	97.9	100.8	98.1	109.7	106.9	93.8	103	110.3
7	30	2009	100.6	96.9	100.6	99.6	97.9	99.9	97.9	94.1	99.4	95.3	109.5	108.2
7	31	2009	100.2	95.7	100.2	98.3	96.6	98.5	96.5	109	107.2	95.6	94.1	108.8
8	1	2009	100.3	98.7	101.1	94.2	99.8	97.2	100.4	108.1	106.4	98	95.4	107.1
8	2	2009	94.1	98.5	100.6	93.7	99	98.4	94.6	97	110.4	104.4	96	96.4
8	3	2009	94.9	100.4	101.2	94.2	99.9	94	108.8	104.8	99.5	109.5	108.3	108.1
8	4	2009	94	99	100.9	101.3	99.2	96.4	110.5	103.8	98.1	108.8	111	112.4
8	5	2009	93.8	99.2	100.6	95.1	99.3	100.6	109	104.5	102.2	94.3	112	108.6
8	6	2009	95.6	100.9	93.7	95.3	101.3	93.7	107.3	106.7	103	102.4	112.8	111.6
8	7	2009	96.6	99	95.5	96.7	97.5	94.1	103	105.7	103.1	101	108.8	108
8	8	2009	101.3	99.1	101	95.5	97.5	97.9	101	109.1	107.7	98.6	93.9	99.7
8	9	2009	97.2	98.7	100.8	95.9	100.8	97.6	96.4	101.4	109.6	102.7	97.3	95.8
8	10	2009	101.1	98.3	100.2	100.6	99	100.5	108.6	106.6	97.1	111.2	107.3	109.7
8	11	2009	101	98.4	100.5	100.8	98.3	100.1	107.6	107.3	95.6	109.6	110.9	110.9
8	12	2009	100.6	98	100.8	97.5	99.7	97.1	110.5	110.2	98.3	98.6	107.6	110.9
8	13	2009	99.3	96.1	98.2	99.9	98	98.9	107.9	107.3	96.3	106.7	108.6	108.6
8	14	2009	95.5	99.3	101.2	93.7	99.1	96.4	94.4	103.9	102.1	94.5	109.9	109.6
8	15	2009	98.7	99.2	100.6	95.9	94.1	97.8	94.7	100.8	108	97.9	93.6	94.3
8	16	2009	94.5	100.6	96.7	96.5	95.4	100.3	95.9	94.2	105.6	105.8	100.6	101.3
8	17	2009	95.6	100.9	95.7	94.2	99.5	94	110.3	103.6	100.7	105.6	108.6	108.9
8	18	2009	101.2	99.3	99.1	95.9	98.8	101.2	109.3	103.4	99.1	110.7	112.6	111
8	19	2009	95.4	99.8	93.6	97	99.1	94.7	105.9	106.2	103.1	94.6	106.7	112.2
8	20	2009	94.4	99.3	94.3	94.2	100.3	100.6	110.6	104.9	98.1	107.4	106	111
8	21	2009	93.6	100	95.1	95.4	100.3	94.4	99.6	109.4	105.9	94.9	111.3	111.4
8	22	2009	98.3	96.7	99.3	100.6	100.5	96.3	99.8	108.8	103.1	96.6	93.8	103.8
8	23	2009	95.3	101.3	96.2	98.1	97.1	93.6	98.2	99.2	108.1	101.6	103	100.6
8	24	2009	97.5	95.4	97.3	98.5	95.8	97.6	95	109.3	104.3	94.3	108	107.3
8	25	2009	96.2	96.7	95.7	96.5	99.1	94.9	101	106.4	105.3	97.8	98.5	109.4
8	26	2009	98	93.6	95.8	97	99.1	93.9	97.2	105.9	102.3	97	98.5	108.8
8	27	2009	95.9	100.6	96.7	94.2	100	100.7	93.6	103.9	102.9	95.3	111.5	107.4
8	28	2009	95.3	100.4	100.6	95.4	100.8	100.8	101.1	109.6	98.3	99.8	110.7	107.5
8	29	2009	101	98	100.6	95.1	101.1	98.3	100.5	109.9	104.3	96.7	96.7	93.7
8	30	2009	95.3	100.7	95.7	98	96.5	100.7	96.4	96.6	106.1	100.7	99.3	96.8
8	31	2009	97.7	93.9	96.4	97.2	96.7	94	93.9	104.9	99.5	93.7	108.1	112.5
9	1	2009	95.5	100.6	93.9	94.6	100.9	95.7	108	104.3	100.1	111	110.2	109.6
9	2	2009	95.7	100.1	93.9	94.3	98.5	94.2	107.2	104.6	101.9	110.8	110.3	109.9
9	3	2009	95.2	98.7	100.8	101.3	100.6	100.9	105	102.6	100.6	108.1	109.8	111.9
9	4	2009	96	101.1	95.4	94.3	93.6	94.4	106.8	104.5	101.4	110.4	111.8	109.2
9	5	2009	94.5	98.9	101.3	93.7	94.6	99.8	93.7	103.5	107.1	100.2	108.8	111.9
9	6	2009	94.6	98.3	101	93.8	100.9	98.5	94.5	93.6	104.9	99.9	95.6	98.9
9	7	2009	93.9	98.2	100.2	101.2	100.4	96.5	107.3	110.4	99.6	99.3	110.8	106.2
9	8	2009	95.6	99.1	100.2	100.9	99.5	100.9	106.6	102.6	99.7	111.5	107	111.5

2009 Running Cost
Is this a leap year? n

Month	Day	Year	1	2	3	4	5	6	7	8	9	10	11	12
9	9	2009	97.9	101.2	93.6	94	99.3	94.1	108.4	104.5	95.8	101.7	112.3	112.3
9	10	2009	97.4	100.6	93.5	94.4	101	93.6	107.1	105.6	103.5	103.1	109.2	112.6
9	11	2009	97.2	99.9	96.9	93.9	101	100	106.5	104	97.3	94.8	110.2	108.4
9	12	2009	93.5	98.1	99.9	100.9	99.7	96.1	107.8	108.6	105.8	99.2	111.7	111.2
9	13	2009	94.3	98.5	101	93.7	98.8	98.3	94.3	107.7	105.9	100.5	101.9	98.3
9	14	2009	97.6	101	97	94.7	100.3	94.8	106.4	102.1	99.9	111.8	109.7	107.7
9	15	2009	97.5	101.1	93.8	94.4	100.8	95.3	105	103.6	102.8	112.6	106.8	109.9
9	16	2009	94	100.2	101.1	98.6	99.5	101.9	110.1	103.3	102.2	111.5	108.5	109.3
9	17	2009	96.8	101.2	101.3	94	99.3	96.5	105.8	102.8	100.4	109.1	109.2	110.4
9	18	2009	97.4	100.8	100.1	94.7	101.1	99.5	105.4	101.2	98.9	110.8	111.7	112.3
9	19	2009	96.3	100.2	99.4	94.5	96.2	98.1	107.7	110.3	100.6	96.5	100.9	97.4
9	20	2009	101.1	96.8	98	99.1	97.9	93.9	98.6	100.6	96.8	109.5	101.6	106.2
9	21	2009	97.1	99.2	99.8	100.8	100.5	100.5	94.7	97.5	103.2	97.6	100.1	97.3
9	22	2009	97.5	97.2	98.2	99.1	97.1	98.1	100.1	107.5	102.1	97.3	96.9	94.5
9	23	2009	99	97.3	98	98.8	96.5	97	99.7	109.6	100.7	102.6	99	96
9	24	2009	100.5	95.5	97.2	98.6	96.9	96.4	109.1	110.4	100.7	97.1	98	94.6
9	25	2009	98.5	95.1	95.3	96	96.7	93.6	108.5	105	103.5	95.3	111.7	112.6
9	26	2009	97.8	93.9	95.6	96.9	96	100	94.3	104	106.8	101.4	102.8	101
9	27	2009	96.2	100.5	93.6	96.7	96.6	100.1	95.7	94.8	106.2	106.9	99.4	102.5
9	28	2009	97.9	100.7	94.2	96.4	94.3	95.7	109	103.6	104.2	102.3	103.3	93.9
9	29	2009	101.3	97.2	98	98.7	96.2	97.3	97.2	103.6	102.1	98.6	100.4	98.8
9	30	2009	93.6	97.8	98.8	99.2	96.7	97.8	101	106.6	107.3	104.5	97	97.6
10	1	2009	99.5	98.3	95.4	101.1	94	94.1	109.2	106.5	104.9	99.5	95	95.9
10	2	2009	98.1	100.9	93.8	94.2	94.1	94.6	110.4	105.5	103.8	99	94.5	94.8
10	3	2009	97.7	101.1	93.6	95.8	93.8	98.4	93.6	103.6	107.6	98.6	101	99.1
10	4	2009	96.7	100.9	94.1	96.6	96.5	99.5	95.7	97.1	108	102.9	101.2	100.4
10	5	2009	98.1	99.8	93.6	95.6	95.9	95.4	110	108	107.2	100.3	94.5	108.4
10	6	2009	99.9	93.9	95.8	96	95.9	95.5	95.2	110.5	99.5	97.8	100.5	97.5
10	7	2009	99.2	95.4	96.1	96.6	93.6	95.4	110.6	108.1	99.6	95.8	100.7	95.1
10	8	2009	98.7	93.6	95.5	96.1	96.7	95.6	109.3	107.5	104.6	101.5	96.8	98.2
10	9	2009	93.6	98.2	101.1	94.1	100.9	95.4	108.6	106.7	97.8	94.9	97	96.1
10	10	2009	98.7	97.5	95.7	96.6	96.1	99.4	95	99.8	108.7	103.7	101.9	100.7
10	11	2009	99.6	93.9	96.9	98	96.2	95.1	97.3	109	107.9	105.6	100	106.5
10	12	2009	100.2	93.9	95.6	96.8	94	97.7	108.5	109	103	100.4	96.1	95.2
10	13	2009	98.2	94.2	95.7	94	95.2	97.2	95.4	103	98.1	97	95.8	94.3
10	14	2009	99.8	94	93.8	96.7	95.6	95.4	107.9	106.6	99.4	95.6	97.5	94.1
10	15	2009	96	95.4	96.5	97.1	94.2	97.4	96.7	109.4	100.2	103.2	97.2	94.4
10	16	2009	99.8	95.5	96.4	96.7	96	96.7	110.6	109.3	100.9	101.5	97.5	96.5
10	17	2009	99.6	95.8	97.5	99	98.2	94.3	97.7	98.3	110.1	103.7	99.7	104.8
10	18	2009	99.8	95.5	96.9	97.8	97	96.7	96.7	98.1	110.1	108.7	107.1	100.4
10	19	2009	97.9	99	93.9	96.1	99	95.5	100.2	109.5	99.5	100.9	111.2	110.6
10	20	2009	99.3	94.2	96.1	96.8	95.5	95.5	109.8	107.5	106.3	100.8	95.3	95.1
10	21	2009	99.8	94.1	95.8	96.2	97.5	94.7	94	104.2	102.3	99.3	108.4	110.4
10	22	2009	99.4	95.1	95.5	96.6	95.7	95.6	107.7	106.3	102.1	95.4	103.8	106.6
10	23	2009	96	99.8	94.2	96.3	95.9	93.9	93.8	104.5	103	96.8	94.4	112.6
10	24	2009	96.5	101	95.1	95.7	93.8	98.1	99.1	110.4	110.1	104.3	99.4	96
10	25	2009	99.8	93.8	96.2	97.5	97	101.1	94.2	96.5	109.7	107.5	103.4	102.3
10	26	2009	95.7	99.1	99.5	99.8	97.7	97.9	108.7	106.2	107.1	103.4	99.6	96
10	27	2009	98.2	96.5	97.3	97.7	96.1	96.7	108.7	107.5	106.4	96.1	99.6	99.8
10	28	2009	97.4	96.4	97.1	98.4	96.3	96	108.6	106.7	100	103	97.3	96
10	29	2009	97.4	96.8	97.9	98.5	97	97.5	99.7	110.2	101.9	98.4	103.4	99.8
10	30	2009	100.2	95.6	96.4	96.8	95.4	96.7	108.9	106.1	107.4	96.5	101	98.6
10	31	2009	94.3	99.4	99	95.8	95.6	101.1	95.2	94.3	107.4	102.4	107	99.8
11	1	2009	97.2	93.9	99.9	96.8	94.5	97.3	100.5	98.3	106.9	103.4	103	101.7
11	2	2009	95.8	95.4	97.9	100.1	97.8	96.9	103	104.9	103.1	103.1	97.6	95
11	3	2009	100.7	97.4	100.6	94.2	100.8	93.5	93.9	103.5	104.6	101.8	96.6	93.8
11	4	2009	95.1	101.1	97.1	98.5	96.2	94.3	93.9	107.2	100	97.4	99.9	97.5
11	5	2009	101	98.5	100.6	100.6	98.7	97.2	108.3	108.3	101.3	98.3	102.4	101
11	6	2009	100.6	98.4	99.8	97.5	99.4	96.7	93.9	107.6	99.6	96.1	101.8	101.4
11	7	2009	98.3	96.5	100	95.1	100.1	101.3	95.5	94	104.4	99.5	103.8	103.2
11	8	2009	99.8	98.1	99.8	94.1	95.9	96.5	97.4	96.4	108.9	106.2	101.8	106.5
11	9	2009	96.3	100.1	93.9	94.9	100.4	97.8	110.5	106.6	101.3	98.7	102.3	100.8
11	10	2009	99.8	98.3	100.3	101.3	98.6	95	94.2	104.9	107.1	102.8	99.2	96.7

2009 Running Cost
Is this a leap year? n

Month	Day		Year	1	2	3	4	5	6	7	8	9	10	11	12
11		11	2009	101.2	97.3	100.4	100	98.8	95.6	93.6	103.7	105.9	95.8	101.1	99.5
11		12	2009	101.1	97.4	100	100.3	99.3	96	93.5	109.6	105.8	102.8	96.2	103.5
11		13	2009	95.4	99.7	94.5	95	95.1	98.3	100.3	110	108.8	105.2	100.1	99.5
11		14	2009	93.6	99.6	93.6	95	93.9	97.3	97.4	96.5	106.6	103.6	100.8	106.7
11		15	2009	93.6	99.6	93.6	94.4	93.9	97.4	97.7	99.5	104.4	109.9	103	101.1
11		16	2009	95.7	100.6	95.4	96.2	93.9	99.8	94.4	103.4	108.1	100.5	103.2	98.6
11		17	2009	101.3	97.4	100	101.3	98.2	95.6	110.4	104.1	104.6	101.6	96.5	95.2
11		18	2009	95.8	99.2	99.8	93.6	100.2	97.4	108.8	108	102	97.5	98.1	101.3
11		19	2009	95.5	99.6	94.7	95.7	100.4	97.8	109.3	109.9	103.1	102.9	98	95.7
11		20	2009	95.6	100.5	93.6	96	98.3	98.3	110.5	109.5	102.9	103.4	99.4	99.6
11		21	2009	99.1	99.6	93.6	94.9	94.1	96.8	100.6	109.7	106.4	103.8	104.2	102.6
11		22	2009	95	101.2	98.8	98.3	98.1	94.2	97.6	99.3	109.7	110	104.5	102.5
11		23	2009	93.6	99.7	93.6	94	100.4	97	107.2	106.1	102.1	100.5	95.1	102.6
11		24	2009	101.3	97.4	100	101.3	98.2	95.8	110.3	104	104.6	101.7	96.7	95.2
11		25	2009	96	99.3	99.8	93.6	100.2	97.5	108.7	107.9	102.1	97.6	98.2	101.4
11		26	2009	96.8	95.8	100.4	100.9	98.2	99.2	97.8	107.7	104.9	103.3	98.2	96.8
11		27	2009	94	99.8	99.8	96.7	99.2	93.6	98.6	109.4	108.6	102.1	96.5	102.4
11		28	2009	97.9	95.6	100.1	95.1	100.1	95.7	94.1	94.5	104.3	106.3	100.2	99
11		29	2009	94.7	100.6	97.1	99.9	97	99.5	94.3	97.2	108.7	103.5	103.9	102.6
11		30	2009	100.6	100.3	93.6	96.2	101	98.9	110.5	108.5	104.2	98.3	96.8	102.2
12		1	2009	93.9	98.2	101.1	99.1	99.6	97.3	108.4	109.8	101.2	98.8	95.8	101.7
12		2	2009	98.6	100.3	93.7	94	100.3	94.8	101.1	109.6	109	106.6	101.5	97.9
12		3	2009	97	100	93.7	93.8	100.1	99.1	110.4	107.3	110.1	103.6	97.7	103.2
12		4	2009	96.5	100.3	96.7	100.6	98.6	97.9	110.2	107.7	108.4	105.1	99.8	96.3
12		5	2009	93.9	98.6	101.2	100.9	99.4	95.8	95.9	100.5	107.8	106.9	103.6	106.6
12		6	2009	95.2	98	99.8	99.1	100.2	96.7	98.6	101.4	94	109.9	106.3	104.6
12		7	2009	99.4	93.6	93.9	100.8	97.3	99.6	102.6	103.6	105.5	100.2	98.3	98
12		8	2009	96.4	100.7	98.3	94.3	99.2	97.6	110.4	102.1	107.4	107.4	103	101.4
12		9	2009	99	96.7	95.8	95	100.8	101	99.3	110.1	106.6	109.4	105.6	103.4
12		10	2009	97.7	101.1	94.8	94.8	100.6	98.9	95.1	110.6	107.1	99.8	105.6	104.7
12		11	2009	97.8	100.6	93.9	99.8	98.6	98.4	109.1	110.3	107	106.4	103.9	102.2
12		12	2009	96.2	99.9	101.3	95.9	100.2	93.7	95.9	98.2	109.6	107	105.1	104
12		13	2009	97.4	100.9	93.9	94.8	93.6	98.2	100.4	95	107.4	104.3	109.1	109.5
12		14	2009	98.7	95.9	94.8	94.3	100.7	99.4	106.4	98.9	106.8	104.7	104.1	106.1
12		15	2009	97.9	101.1	94.3	93.9	99.7	99.3	99.6	107	110.3	103.4	102.2	99.9
12		16	2009	99.7	94.1	95.8	95.5	96.7	95.4	95.2	108.1	103.7	106.1	105.1	101.6
12		17	2009	100.2	95.4	95.2	95.3	96.7	93.6	95.7	109.9	107.4	104.9	104.6	100.9
12		18	2009	98.7	99.1	95	95	99.8	101.1	95.8	104.9	105.9	105.4	102.3	100.9
12		19	2009	98.4	98.3	95	95.1	101.1	96.7	95.9	99.8	106.5	103.9	108.7	109
12		20	2009	96.7	101.3	94.5	94.5	100.6	96.4	99.8	94.2	108	105.9	106.1	105.6
12		21	2009	95.5	100.1	95.2	93.6	100.2	98.9	93.9	94.1	107.7	105	101.6	102.2
12		22	2009	97	100.8	94.2	94.6	98.3	100.1	95.3	107.6	109.7	99.5	105.6	100.8
12		23	2009	97.6	99.8	94.4	94	100.3	100	96.5	93.8	107.6	102.2	100.4	99.5
12		24	2009	95.6	98.3	100.7	101.2	99.7	100.1	97.8	107.8	104.4	98.3	102.2	102.8
12		25	2009	95.9	100.2	94.2	95.2	94	99.3	99.8	97.7	109.2	104.5	110.5	110.2
12		26	2009	94.2	100.1	93.8	93.7	101.3	97.4	98.8	100.3	107.4	106.4	104	105.1
12		27	2009	95.9	100.2	94.2	95.2	94	99.3	99.8	97.7	109.2	104.5	110.5	110.2
12		28	2009	98	98.3	94.3	94.8	100.9	96.8	98.6	94	100.1	106.1	102.3	100.9
12		29	2009	95.9	99.7	101.1	101	98.9	100.6	98.6	110.2	106.2	99.8	103.4	95.9
12		30	2009	100.7	97.5	100.2	100.5	98	98.4	96.7	108	104.9	97.7	101.1	99.7
12		31	2009	95.2	100.6	98.6	99.9	97.4	94.1	94.7	108.8	106.1	98.4	98	100.9

2009 Running Cost
Is this a leap year? n

Month	Day	Year	1	2	3	4	5	6	7	8	9	10	11	12
Based on Hour Ending			1	2	3	4	5	6	7	8	9	10	11	12
Total $ by Hour			35,922	35,734	35,150	34,949	35,731	35,955	37,169	37,914	37,949	37,423	37,535	37,635
Total Obs by Hour			365	365	365	365	365	365	365	365	365	365	365	365
Off Peak Hrs ($)			35,922	35,734	35,150	34,949	35,731	35,955	37,169					
Total Off Peak Obs by			365	365	365	365	365	365	365					
Mid Peak Hrs ($)										37,914	37,949	37,423	37,535	37,635
Mid Peak Obs by Hour										365	365	365	365	365
Priority Peak Hrs ($)														
Priority Peak Obs by Hour														
Total $ Check			0.00	0.00	0.00	0.00	0.00	0.00	0.00	0.00	0.00	0.00	0.00	0.00
Total Obs Check			0	0	0	0	0	0	0	0	0	0	0	0

Total Avg. $/Mwh	$101.87
Off Peak Avg. $/Mwh	$99.30
Mid Peak Avg. $/Mwh	$103.29
Priority Peak Avg. $/Mwh	$105.38

13	14	15	16	17	18	19	20	21	22	23	24	SUM	DOW
99.8	100.9	101.9	96.8	97.9	109.2	108.2	97.6	101.6	106.5	107.2	98.3	2408.9	4
102.2	101.9	102.1	102.4	101.3	97.3	107.5	107.3	97.1	103.1	106.7	96.2	2442	5
99.8	100.9	101.9	96.8	97.9	109.2	108.2	97.6	101.6	106.5	107.2	98.3	2408.9	6
103.4	101.8	105.6	103.8	99.1	98.1	106.2	112	95.8	106.4	105.6	100	2438.6	7
101.5	101.8	96.5	101.7	99.6	94.1	107.9	109.1	96.5	98	98.9	99.6	2395.3	1
99.1	96.3	97.4	96	102	94	112.3	112.3	99.2	99.8	110.1	100.2	2413.5	2
95.6	102.3	101.9	100.5	100.4	95.3	112.5	108.3	98.4	102	104.9	100.1	2409.6	3
100.1	97.3	100.8	98.9	97.7	105.7	106.3	111.7	98.4	98.3	105.9	98	2405.6	4
102.2	101.9	102.1	102.4	101.3	97.3	107.5	107.3	97.1	103.1	106.7	96.2	2442	5
102.4	102	100	97.9	95.6	96.5	111.9	109.4	94.9	101.3	107.4	95.7	2420.9	6
106.1	100.3	103.2	100	106.2	99.1	111.2	94.6	98.8	102.2	93.6	94.4	2399.7	7
99.9	97.6	102	97.8	103.5	99.5	112.4	110.3	93.5	100.2	94.6	93.6	2386.8	1
96.7	96.4	98.3	95.6	100.8	100.8	109.5	107.2	96.5	100.6	95.3	95	2369.3	2
105.4	102.4	101	100.4	100	95.6	107.3	107.3	96.7	105.4	97.6	95.2	2420.5	3
102.8	96.3	96.4	101.2	99.5	94.7	109.1	106.3	99.4	100.5	109.5	99.2	2417.8	4
100	101.7	101.7	98.8	99.9	96.1	112.3	94	108.5	99.1	110.4	93.6	2414.5	5
95.9	96.4	97.2	103.4	98.7	93.6	107.1	106.6	102.4	97.6	109.9	104.6	2418.2	6
96.3	96.8	98	96.2	102.9	97.5	108.4	109.3	96.6	101.3	106.9	109.9	2404.2	7
105.9	96.3	99.5	99	98.4	93.8	106.3	108.3	110.7	94.7	97.9	94.6	2440.7	1
97.3	100.5	102.3	101.6	100.2	94.5	111.6	106.4	95.8	98.4	97.8	98.6	2377.2	2
95.3	97.2	96.3	95.8	94.5	93.8	107.1	106.4	95.6	100.2	106.5	98.2	2384.2	3
99.3	101.1	101.9	99.2	98.2	94	107.1	109.1	97.5	98.1	106.9	98.2	2396.2	4
95.4	96.7	97.5	99	100.3	95.2	107.9	98.8	103.3	106.8	109.9	98.7	2392.1	5
101.1	101.6	103.7	106.9	102.9	97.4	96.4	109.9	98	101.4	107.2	100.1	2439.2	6
101.5	103.2	101	97.5	103	101.6	106.7	107.5	100.3	100.8	109.3	98.4	2410.8	7
94.8	95.5	94.5	106.4	94.2	110	107.4	112	110.6	101.6	104.5	96.1	2427	1
96.7	96	95.2	95.2	110.4	108.8	111.3	110.3	108.1	102.4	105.1	96.9	2439.1	2
101.3	99.9	94.5	94.7	102.9	109.3	109.1	106.5	107.9	96	103.6	95.6	2419.2	3
101.9	96.3	95.4	109.1	107.7	101.5	109.1	108.5	110	103.5	104	94.8	2444.9	4
94.9	110.4	104.1	95.7	98.9	106.7	108.3	108.1	96.4	99.6	110	96.1	2430.2	5
97.9	96.7	97.1	103.5	99.5	94.8	108.1	94.1	97.2	106.4	108.4	97.7	2418.6	6
103.2	102.7	100.4	98.3	101.3	98	112.5	109.7	99.2	106.9	101.1	95.6	2438	7
97.3	95.6	96.4	94.5	99.3	94.2	110.6	112.6	106.3	103	97	98.8	2393.6	1
98.7	100.6	102.4	101.5	98.2	99.3	106.7	96.1	94.6	104.6	97.4	97.8	2397.4	2
101	103.1	103.4	100.2	96.3	98	108.9	110.1	96.7	102.3	110.3	100.6	2439.1	3
103	103.4	106.8	103.4	96.7	97.6	108.6	96.1	96.4	102.3	107.3	98	2436.6	4
99.3	99.4	100.4	97.8	101.8	98.7	97.2	93.7	96	99.5	110.6	96.3	2385.8	5
98.7	97.7	96.8	99.7	96.9	94.4	112.7	110.2	98.7	103.3	110.6	100.6	2413.4	6
101	100.1	103.5	101.4	100.5	98.7	109.2	110.2	95	100.5	109.7	98.7	2427.8	7
110.4	102.3	109.7	112.6	111	109.6	110.6	111.7	106.5	103.4	105.2	98.6	2492.9	1
104.7	94.8	95.9	107.6	93.8	108.2	110.9	110.5	109.1	96.9	108.6	99.5	2437.9	2
108.1	100.4	94.1	111	109.8	107.7	110.9	107.6	111	96.7	105.2	99.2	2438.1	3
95.3	95	94.9	112.3	110.3	110.3	112.7	112.7	110.3	98.8	108.2	101.1	2454.5	4
95.1	94.3	93.9	95.9	99	95.1	112	103.7	95.2	103.7	107.5	100.5	2395.3	5
102.6	103.3	102.8	100.2	105.2	99.8	93.8	94.4	97.1	102.4	107.3	94.4	2393.6	6
106.7	106.4	107.4	106.1	101.5	103.9	93.9	108.7	96.6	103.7	110.5	94.2	2448.6	7
98.5	97.1	97.8	95.8	98.1	95.3	112.4	112.4	94.1	101.6	108.4	97.4	2401	1
97.4	96.6	96.3	94.9	93.8	94.2	110.9	107.1	93.7	99.5	107.2	95.7	2374.8	2
98.4	96.1	97.2	97.6	96.4	96.9	112.4	108.4	95.7	101.3	100.2	96.4	2393	3
98.1	96	97.6	93.9	95.3	95.2	109.1	110.6	94.8	98.9	109.5	95.5	2382.5	4
97.6	97.1	94.8	94.1	96.4	95	107.8	101.9	96.4	99.1	110.5	99.7	2379.5	5
104.1	105.8	106.1	104.2	98.6	97.7	96.1	94.1	98.1	103.8	107.1	95	2398.2	6
105.5	106.1	104.4	101.2	100.7	99.8	95.8	94.8	98.1	102.7	108.3	95.6	2426.6	7
106.1	105.3	103	101	97.5	93.9	106.3	107.3	97.8	98.2	96.3	95.8	2405.5	1
99.3	98.3	97	95.3	94.8	109.5	109.4	110.9	106.1	106.1	110.3	93.8	2426.3	2
97.3	96.9	94.8	94.6	94.9	93.9	110.3	107.3	95	99.5	108.8	99.9	2389.5	3
96.1	94.3	93.6	94.9	93.8	93.7	108.9	108.1	101.8	99.4	109.2	100.9	2371.7	4
95.5	96.8	98.3	96.7	97.6	97.1	94	94.1	98.6	107.1	99.7	101.3	2368.9	5
105.2	106.3	105.4	102.6	98.8	96.1	95.6	97.9	101.5	100.9	107.5	98.7	2410.9	6
												0	
103.1	101.8	101.7	100.5	104	99.2	96.6	94.2	101.8	101.8	93.6	98.5	2392.9	7
99.8	99.8	98.3	96.2	98	97.3	94	106.5	95.2	108.3	101.1	94.8	2392.8	1
102.5	101.6	100.7	97.2	95.9	95.9	96.9	107.1	98.3	102.5	94.3	96	2381.8	2

13	14	15	16	17	18	19	20	21	22	23	24	SUM	DOW
102.9	101.6	100	98.7	97.5	95.8	111.4	110.5	98	103.3	105	96.4	2432	3
99.8	98.1	99.1	97.5	95.6	97.2	94.7	109.1	94.8	99.8	108.9	95.6	2403.7	4
98	97.6	95.9	97.2	100.1	100.4	95.1	110.1	100.5	106.1	108.8	98.6	2413.5	5
102.8	105.9	103.7	101.4	99.4	97.4	94	94.4	101.6	105	106.8	96.8	2416.9	6
101.5	100.4	101	101.6	105	100.7	95.8	108.4	97.9	105.2	109.6	101.1	2431.1	7
96.6	95.2	94	96	96	94.6	112.5	110.6	107.5	96	110.1	96.3	2378.8	1
94	95.7	112.4	107.6	109.8	111.1	111.6	110.5	112.4	93.5	107	106.4	2453.4	2
96.5	100.5	100.4	98.2	97.6	94	111.2	110.2	103	98.8	106.5	100	2398.8	3
106.8	100.7	101.3	101	105.2	101	95.5	95.6	95.5	101.7	107	96.9	2400.1	4
106.3	106.8	106.2	106.1	104.3	102.1	96.8	93.9	98.3	107.1	102.1	101	2429.6	5
101.2	105.2	108.1	108.2	104.8	102.1	101.1	95.8	105.1	107.4	110	98.1	2444.4	6
104.4	103.8	110.1	110.5	105.3	100.1	99.2	97.2	97.3	107.9	94.3	93.8	2224.9	7
106.7	104.7	97.7	103	107.3	108.7	111.4	113.5	111	106.3	98.1	99.9	2291.5	1
106.3	107.2	97	100.9	108.7	107.3	109.8	114.2	108.9	111.2	99.6	93.6	2288.1	2
106.7	100.4	104.8	108.8	110.1	110.7	110.9	115.3	109.6	105.3	95.7	99.8	2269.8	3
106.2	112	112	109.6	106.6	109.9	111	116.9	110.9	111.5	96	96.5	2360.4	4
112.1	109.3	106	109.3	109.3	110.3	110.5	109.6	109.9	106.7	99.4	98.8	2458	5
106.8	107.7	107.3	106.5	109.4	106.7	109.6	112.7	106.6	107	99.9	98	2463.7	6
107.1	107.7	108.7	107	107.9	112.7	109.8	112.3	108.9	107.6	100.2	93.7	2480.4	7
97.3	98.2	95.8	96.3	96.3	93.6	100.3	112	103	101.8	96.4	97.9	2364.8	1
96.6	96.4	95.5	95.2	106.8	94.4	103.3	111.3	108.2	94.9	103.2	93.7	2388.2	2
93.6	95.5	100.2	93.8	109.7	112.3	109.9	112.7	107.7	96.8	105.5	110.4	2442.5	3
109.6	112.5	106.3	111	112.4	110.3	108.4	109.2	109	94.1	107.5	110.5	2498.5	4
93.6	93.6	94.3	95	94.4	94	111.9	109.5	104.6	97	109.1	101	2396.6	5
100.2	104	104.9	105.8	101.6	104.3	96.9	94.6	104.7	100.6	100.1	100.7	2426.6	6
107.9	110.5	110	108.9	103.2	106.2	101.1	95.8	103.2	101.7	94.1	98	2446.9	7
100.1	100.1	100.1	98.7	97	95.8	107.5	111.9	110.6	106.1	105.8	99.8	2428.3	1
97.5	98.2	97.4	95.4	96.8	94.1	106.3	108.4	94.3	101.3	103.2	98.4	2370.9	2
95.1	95.5	96.3	95.3	96	96	111.5	107.2	94.6	105.5	102.2	98	2374.9	3
98.8	98.6	98.6	99.3	100.1	97.6	95.7	106.2	98.2	100.7	96.7	97	2385.3	4
100	100.9	100.4	100.4	101.7	101.5	96	102.9	100.7	102.5	95.8	93.8	2370	5
103.1	101.6	103.7	103.2	100.9	103.9	97.4	95.2	100.4	110.5	95.1	97.2	2403	6
107.3	106.4	104.9	105.8	106.2	106	100.6	103.3	101.2	110.1	100.2	99.5	2454.7	7
106.6	108.1	109.3	107.4	112	109.3	110.5	110.2	108	94.7	104.3	109.6	2520.2	1
110.2	106	108.6	112.1	108.6	110.3	112.8	106.4	106.1	95.5	110.5	109.2	2536.3	2
110	110.9	106	110.9	109.4	106.8	109.8	110.9	108.9	95	107.1	108.8	2527.3	3
109.4	106.8	106.3	107.6	106.8	109.1	110.9	112.6	112.1	94	106.7	107	2515.9	4
115.4	116.8	113.8	113.8	113.1	112.7	117.1	117	113.7	108.9	95.3	106	2618.9	5
110.9	112.2	108.8	107.4	110.9	110.6	112.7	120.9	114.2	108.6	100.3	100.5	2572.2	6
106.2	109.5	108.7	112.2	109.8	110.3	115.2	117.1	109.2	106.6	102	105.5	2534.3	7
111.7	111.5	107.6	107.6	108.8	107.9	111.8	109.7	112.5	100.9	95.2	110.3	2522.1	1
93.9	94.2	95.4	95.6	95.1	106.1	108.9	111	108.4	95.2	94.5	95.3	2383.7	2
111.5	107.9	111.7	111.7	107.4	111.5	111.6	111.4	108	100.6	109.4	110.2	2505	3
109	107.9	107.9	110.3	108.3	111.8	106.7	108	107.4	102.6	108.7	94	2493.2	4
109.9	110.5	101.6	109.2	99	94.5	107.3	108.6	96.8	102.3	109.2	109.2	2453.6	5
99.6	102.2	102.1	99.9	97.8	96.1	102.9	107.6	107.2	97.8	110.2	110	2411.6	6
96.5	97.3	97.6	95.8	100.4	96	111.5	108.5	95.9	101.2	96.2	94	2370.1	7
108.4	109.7	110	108.2	95.7	102	109.1	108.7	106.8	98.8	97.1	94.3	2460.3	1
107.2	94.7	95.8	94.6	98.6	95.5	112	109.4	100.6	104.1	97.3	96.5	2383.3	2
107.9	95.4	106	110	94.6	94.2	108.1	112.6	97.3	103.1	103.7	96.1	2427.2	3
95.5	110	94.6	112	94.6	95.3	108.8	111	111.4	99.1	102.1	95.2	2426.6	4
95.7	106	107.9	110	94.8	96.6	96.4	108.8	95.1	99.6	104.4	95.5	2386	5
99.5	99.2	100.8	99.5	98.5	95.9	98.9	94.5	102	100.2	108.6	98.4	2400.2	6
105.5	104.7	105.5	104.8	101.6	97.7	100.5	97.2	96.6	100.8	110.2	100.3	2428.2	7
96.2	96	96.8	94.9	95.4	95.4	94.7	111.1	94.7	100.7	99.5	100.3	2377.9	1
96.3	94.6	94.1	94.2	94.5	97.5	106.9	110.5	100.5	98.7	106	100.1	2379.9	2
103.4	99.3	99.8	99.1	100.5	101.2	96.8	108	102	106.3	99	93.9	2399	3
106.7	106.3	102	102.3	102.7	97.7	95.9	99.5	104.2	106.3	110	97.8	2426.9	4
111.4	111.8	108.4	106.9	109.4	112.1	108.2	112.7	109.4	95.6	100	107.2	2533.5	5
95.4	95.1	97.4	95.2	107.3	109.4	106.9	112.4	112.4	97.4	100.2	109.9	2444.8	6
98.3	97.4	97.7	95	106.3	106.4	112.7	107.5	111.4	96.9	102.2	107.7	2440.8	7
106.7	109.9	112.5	111.2	107.5	108.6	111.2	112.6	111.8	107.4	105.8	110.6	2550.1	1
111	108.5	106.5	110.4	110.3	111	112.5	115.5	106.7	110.6	102.9	106.4	2526.6	2

13	14	15	16	17	18	19	20	21	22	23	24	SUM	DOW
106.5	111.1	111.1	112.8	112.8	111.1	113.8	117.1	111.1	112.1	104.4	106	2575.7	3
109.2	111.1	113.7	113.6	112.5	112.4	112.4	115.4	109.9	111.8	100.3	110.1	2579.8	4
95.7	94.1	95.5	97.6	99.7	103.4	103.1	94.1	102.2	103.5	109	97.9	2390.3	5
105	104.6	103.9	102.6	102.4	101.8	100.9	101.1	101.8	107	97.4	100.7	2428.8	6
104.3	104.2	103.4	102.1	99.7	105.2	103	95.9	103.4	105.1	109.3	95.5	2431.8	7
95.3	94.2	95.8	97.2	100.6	103.3	97.9	111.7	93.9	97.4	109.8	97.1	2382.9	1
101.1	99.3	98.2	95.4	98.4	102.1	98.9	111.7	100.6	97.7	107.7	98.2	2400.2	2
98.5	98.6	95.4	95.4	95.6	99.2	97.3	106.5	101.1	102.8	94.8	94.6	2356.6	3
99.2	96.6	98.6	97.9	101.1	103	102.5	106.7	99.1	103.3	106.5	94.7	2395.4	4
111	107.7	111	106.5	107.4	109.3	109.5	110.7	112	98.6	100	101.3	2506.3	5
109.2	107.2	107.2	106	106.6	108.2	109.4	109.5	111.3	95.8	100.5	99.3	2447.6	6
109.8	106.4	110.5	111.3	112.1	106.6	112.6	111	106.1	95.8	97.9	99.8	2463.6	7
113.7	115.8	116.5	117	116.1	114.1	113.6	116.9	111.1	110.7	100	95.4	2561.1	1
116.1	116.1	113.4	116.4	114	113.2	109.9	117.2	113.6	110.7	100.2	100.4	2564.5	2
114.6	115.8	112.4	113	110.2	110.4	111.1	116.6	113.6	106.7	98.4	93.6	2534.2	3
107.7	110.8	109	112.1	109	106.8	108.9	111.1	112	108.3	98.6	97.9	2505.5	4
97.4	94.4	96.5	95.6	98.4	100.9	100.5	95.5	99.7	100.6	104.1	100.2	2382.4	5
99.5	100.9	99.7	107.1	105.5	104.2	101.9	97.2	102.4	107.1	97.3	101.2	2425.1	6
106	105.6	99.6	105.9	103.6	99.9	96.2	96.2	98.1	104.1	98.7	94.5	2416.9	7
106.1	106	104.4	102.2	99.4	96.9	94.8	106.3	98.2	107	94.5	95.1	2388.9	1
94.4	94.3	94.8	93.9	94.5	97.2	95.2	108.8	94.9	100.6	109.4	100.3	2385	2
109	94.8	94.4	97.7	94.9	94.4	94	100.3	95.5	100.3	110.6	100.8	2392.8	3
106.3	94.7	94.6	108.7	108.3	95.8	97.5	106	94	99.4	110.4	99.5	2417.3	4
94.2	94.3	94.6	94.4	97.9	101.1	102.8	94.3	98.8	106.5	110.6	93.8	2382.6	5
99.6	100.7	99.6	107.1	105.6	104.2	101.9	97.2	102.5	107.1	97.3	101.2	2425.2	6
100.2	100.5	100	106.1	105.5	103.3	102.7	97.1	103.6	101.9	96	93.5	2416.9	7
107.9	107.9	112.2	109.2	111.4	110.8	108.3	112.4	108.3	96.5	99.5	103.3	2524.4	1
108.7	111	114.3	111	113.6	110.4	112.4	112.8	112.3	111.1	101.2	105.7	2570.3	2
110.8	111.1	109.8	114.3	111.1	113.7	111	117.1	114	107.8	101.2	106.1	2591.2	3
114.3	111	112.7	114.8	110	109.8	110.8	113.1	112.4	111.9	102.4	107.3	2585.2	4
113.6	113.6	116	111	113.1	107.8	109.8	111.5	111	107.5	99.8	102.3	2569.1	5
109	110.8	111.9	107.4	108.1	108	111.9	107.2	107.6	109.4	102.6	105	2518.9	6
108.4	108.9	106.6	112.1	106.4	112	106.4	109.8	107.5	112	97.5	108.7	2546.3	7
113.1	113.3	114.2	117.2	112.3	111.1	111.1	117.1	112.9	106.9	96.6	110	2579.6	1
111.1	113.9	114.6	113.6	111.1	111	109.8	116.5	113.9	110.5	97.1	109.5	2581.9	2
116.3	115.6	117.2	114.2	113.1	115.9	113.1	117.2	110.5	110.8	98.5	108.4	2596.9	3
116.3	113.6	115.9	114.4	113.3	111	111	115.6	113.1	106.2	96	99.6	2573.7	4
111.1	111	111	109.7	111.1	115.9	108.1	111.1	109.8	110	98.5	103.1	2556.1	5
108	106.4	107.7	112.7	111.5	110.1	108.6	106.3	112.1	106.7	100	105.4	2527.6	6
107.2	101.4	107.2	106	102.2	101.2	100.5	96.2	99.4	104.7	107.9	98.7	2428	7
109.8	106.9	112.3	112.3	116	114.2	108.9	114.1	112.3	106.3	100.8	105.1	2562.5	1
114.2	114	113.6	113.6	109.7	106.2	108	112.6	112.3	106.3	101.5	106.6	2586.5	2
106.6	116.9	114	112.8	113.6	114	111.3	109.7	114.2	106.6	103.2	106.2	2573.9	3
110.9	112.3	113	114	116.7	106.9	110.1	116	114.2	111.2	100.2	104.9	2578	4
111.3	107.3	110.3	113.5	109.8	109.3	109.3	108	110.3	111	104.1	105.5	2567.7	5
112.7	108.9	108.7	110.1	106.6	111.3	112.1	108.1	112	110	103.5	105	2554.2	6
107.6	109.1	111.1	110.8	110.7	108.8	110.8	109.4	110.6	107.4	95.7	108.2	2541	7
120	122.3	117.1	119.6	117.1	119.6	122.5	119.8	121.3	117.1	107.9	97.4	2701.1	1
119.8	119.8	119.7	119	119.6	117.1	119.6	119	119.6	110.9	111.7	99.1	2706.1	2
122.5	119	119	119.9	117.2	117.4	122.5	117.3	117	117.2	108.8	99.9	2695.2	3
122.5	119.9	122.2	120	119	122.3	119.6	117.4	120.3	110.4	109.7	98.6	2687	4
117	122	122.5	119.6	122.5	121.1	117.1	117.2	117	117	106.6	95.8	2684.7	5
117.1	116.9	117.2	117	122.6	122.4	117.2	117.4	117.1	117	106.6	95.8	2677.8	6
106.3	95	99.5	106.3	106.9	108.1	108.6	108	110.6	107.9	98.5	109.4	2497.8	7
96.7	98.2	98.5	99.8	101.1	101.8	101.8	95.6	96.3	101.4	103.7	97.1	2396.8	1
96.1	97.6	95.7	96.9	97.7	98.9	99.4	97.7	96.1	102.7	103.7	94.8	2373.1	2
107	110.5	109.5	94.3	94.6	96.7	95	110.4	94.8	98.6	109	98.1	2421.6	3
111	111.1	108.5	101.9	94.2	104.7	94.8	110.2	107.5	97.8	109.2	99.6	2467.3	4
94.4	94.8	106.5	106.2	106.9	104.7	94.7	94	94	101.6	109.4	99.9	2383.2	5
100.5	100.4	99.6	97.7	95.8	96	100.3	101.4	101.4	99.3	107	99.5	2390.3	6
103.5	103	102.1	100.7	106.6	104.5	101.9	97.3	99.8	100.3	94	94.8	2395.9	7
100.7	100.6	99.9	97.6	96	96.1	100.5	101.7	101.5	99.4	106.9	99.3	2391.9	1
111.1	106.4	107.1	108.5	108.5	94	106.1	108.6	112.3	96.6	108.2	100.2	2476	2

13	14	15	16	17	18	19	20	21	22	23	24	SUM	DOW
111.6	111	111.8	111.7	107.6	112.3	93.9	108.6	110.4	98.3	105.9	96.3	2502.9	3
96.8	111.8	110.1	108.8	95.2	95.6	96.7	112	100.2	99.2	109.9	98.6	2436.6	4
112.4	103.2	111.8	94.4	94.2	95.5	96.4	94.9	96.3	102.9	110.2	99.3	2410.6	5
97.5	99	100.1	98	98.3	97.3	98.2	96.2	95.7	104.3	106.4	101.1	2377.5	6
105.1	105.5	99.6	106	102.6	98.4	97.9	94	97.4	106.1	94.9	94	2416	7
111	112.3	109.8	106.5	110.9	94	94.1	106.3	106.2	97.9	109	101.2	2461.2	1
99.2	103.3	109.8	106.2	107.1	94.4	93.9	109.8	104.8	97.3	110	100.8	2426.2	2
96.9	93.9	112.4	104.8	106.2	108.5	96.9	108.5	111.6	96.3	108.5	100.7	2438.1	3
111.1	106.9	107	108.4	107.1	108.5	111.6	111.1	107.1	98.2	105.5	98.7	2454.9	4
94.7	110.4	108.7	94.1	106	96.1	93.8	94.8	96	104.2	108.1	99	2389.8	5
95.7	96.6	97	97.7	96.1	96.2	95.5	112.3	94.1	101.1	110.3	100.2	2390.9	6
106.9	104.4	105.9	103.4	99.9	97	95.9	106.7	95.8	103.9	105.6	94.7	2432.8	7
103.3	108.4	111	111	110.3	107.5	93.9	106.6	110.3	96	107.7	99.7	2472.6	1
111.8	111.8	109.3	108.4	110.6	94.7	112.2	111.7	109.9	98.1	109.3	100.5	2495.3	2
110.8	94.9	107.4	96.8	94.8	106	108.8	110.4	106.3	99	110.5	93.8	2424.6	3
95.7	93.8	94.8	94.7	94.7	96.4	96.9	107.1	95.8	98.9	109.9	98	2365.7	4
111.3	104.6	108.3	108.8	94.8	94.9	97	97.9	94.5	97.8	108	99	2416.1	5
97.1	96	95.6	94	94.9	94.6	96.3	103.1	95.9	99.5	108.2	98.7	2375.4	6
102.2	102.6	100.1	97.8	97.6	95.8	96.1	108.3	95.2	99.5	109.9	100.7	2422.2	7
111	109.9	110.5	111.9	110.6	111.7	111.6	109.8	108.3	93.8	110.5	95.4	2525.9	1
108.4	106.5	110.5	107.2	110.5	107.8	108.9	110.8	107.8	94	107.6	100.1	2481.5	2
110.9	109.1	106.3	112.5	106.3	112.3	107.4	109.1	100.2	98.3	107.9	99.3	2497.1	3
110.4	109.8	109.1	109	107.7	112.5	111.7	106.4	109	97.7	108.2	99.8	2491.2	4
108.5	108.1	108.8	101.6	112.1	96.3	98	109.4	95.9	101.5	108.7	98.7	2448.3	5
94.1	106.4	94.5	99.6	94.5	93.6	105.4	108.5	109.1	98.8	110.1	107.9	2429.2	6
95.1	93.8	96.3	95.7	94.6	94.4	94.4	108.6	110.6	98.2	103.8	93.9	2362.5	7
109.9	109.6	108.6	111	111.5	108.3	106.9	114.1	106.6	108.1	106.4	109.6	2534.2	1
106.2	111	111	110.6	111	108.1	110.2	113.1	106.2	95	107.2	107.3	2532.3	2
111	111	111.7	111	111.3	109.3	107.3	106.8	101.3	95.8	108.3	99.6	2503.6	3
108.1	109.4	112	109.9	110.9	108	108	108.1	108	94.7	110.4	93.6	2505.4	4
108.8	110.9	108.6	109	108.6	112	109.4	108.8	106.8	95.9	106	109.7	2503.5	5
103.9	94.3	96.3	95.2	110.6	111.3	108.2	112	102.5	97.5	107.3	110.4	2451.8	6
94.7	98.4	94.7	94.2	111.2	107.9	111.5	108.8	102.5	97	109.6	107.3	2432	7
112.6	117.2	113.7	113.7	113.5	110.9	114	112.4	110.9	93.9	104.6	109.5	2567.1	1
113	116.8	116.2	114.2	110.9	110.2	106.2	113	109.9	94.1	106.6	110.5	2562.6	2
110.9	113.1	113.4	115.4	110.6	110.9	112.3	115.3	110.9	94.2	102.3	108.3	2547.4	3
112.3	110.9	109.6	116	109.6	110.9	110.2	110.9	110	94.3	106.6	109.3	2536.4	4
112.4	110.9	110.3	110.9	109.7	108.7	106.7	108.2	110.7	98.6	107.3	110.4	2504.4	5
95.1	94.6	94.9	99.8	111.4	110	110.8	107.2	94.9	96.9	110.5	103.5	2405.2	6
97.5	96.4	94	94.3	94.7	103.7	94.3	111.9	93.9	98	103.7	94.1	2363.9	7
115.9	113.6	114	107.9	107.9	109.6	111.4	115.9	109.8	94.4	106.8	109.3	2534.1	1
107.9	109.6	110.5	106.1	111.9	111.9	109.4	106.1	109.4	95.5	109.2	110.5	2539.6	2
110.2	110.5	111	111	111.4	110.2	112.6	112.3	111.5	96.1	108.8	104.9	2518.8	3
106.1	111	112.4	111	111	108	106.7	110.7	105.6	96.3	107.4	99.7	2507	4
108.7	106	109.4	107.3	108.7	109.2	110.2	111.4	111.5	96.6	106.1	107.8	2504.2	5
105.3	94.6	94.6	107.8	111.9	95	96	111.3	93.9	101.2	105.7	94.2	2409.1	6
97.9	97.6	96	94.1	95.3	95.1	94.2	108.6	109.1	102.3	107.4	95.6	2385.5	7
106.5	111.2	107.1	106.3	106	111.9	111.3	111.2	112.7	103	105.4	94.7	2487.6	1
110.8	109.8	106.8	106.5	93.6	98.9	96.5	109.6	93.5	98.4	107.5	97.6	2427	2
110.1	107.4	107.1	112.5	109.2	112.1	112.1	109.7	110	96.5	105.2	94.5	2473.5	3
111.2	108.3	111.1	111.1	106.2	112	112.2	109.1	112.7	101.9	103.7	93.9	2496.1	4
110.2	108.3	110.4	107.6	112.4	106.7	94.1	111	112.1	100.4	105.5	109	2508	5
93.6	94.2	94.2	93.6	101.2	96.6	97.1	109.3	101	103.1	106	95.2	2381	6
97.7	99.2	99	98.9	96.1	102.3	97.6	111.2	99.7	101.1	108.7	97.2	2391.5	7
106.4	107.8	106.5	107.2	109.6	107.9	106.9	108.5	107.2	99.2	109.8	104	2469.5	1
112.6	113.9	112.5	111	112.1	107.1	107.3	113.8	108.3	94.1	104.8	94	2515.9	2
110.3	111.7	108.8	110.9	108.7	111.3	106.8	116.5	110.6	100	104	95.8	2516.8	3
111.7	111	110.4	107.4	106.2	107	111.2	112.3	108.6	94.4	104.1	107.4	2527.2	4
106.7	109.7	110.9	110.4	110	111	107.2	110.9	109	96.4	101.5	110.2	2512.8	5
111.6	106.7	107.4	112.5	111.8	95	94.6	110.9	94.3	97.1	107.8	107.2	2464.9	6
96.5	108.3	95.7	95.8	96.2	99.3	111.7	107.9	94.3	101.2	104.8	101.5	2387.7	7
111.2	108.9	107.2	109.2	112.3	109.1	106.4	115.3	109.7	97.4	105.5	94	2510.2	1
106.5	108.1	110.1	106.7	106.5	111.8	107.2	109.8	107.2	99.1	108.1	109.6	2525.8	2

13	14	15	16	17	18	19	20	21	22	23	24	SUM	DOW
108.9	108.3	108.8	111.4	106.5	107.8	111.2	113.5	108.3	100.4	107.9	109.1	2517.2	3
110.6	110.1	109.8	111.1	110.8	109.2	107.5	113.1	112.3	96.8	106.9	109.5	2529.3	4
112.1	106.2	111	110.4	112.1	110.3	106.3	111	108.8	97.2	103.8	109.9	2509.2	5
109.1	111.8	107.1	108.5	107	110.9	106.3	111.9	96.8	100.7	103.6	105.9	2512.1	6
96.3	95.3	93.9	95.4	94.8	94.5	107.9	108.8	94.1	102.3	108.3	109	2393.8	7
111.1	111.9	112	106.7	109	111	108.8	110.2	107.7	100	108.3	108.3	2528	1
109.8	112.2	112.8	109	112.7	111.3	108.3	113.8	110.2	97.8	103.9	94.1	2519.5	2
109.8	108.5	111.1	112.7	107.2	109.3	109	111.1	111	99.6	105.3	108.2	2543	3
109.3	109.8	110.6	108.7	107.4	94.8	109.4	106.4	107.2	103.3	108.3	108.9	2510.9	4
106.4	106.5	109.2	107.8	106.3	97.5	106.6	109.3	95.8	98.6	107.3	107.6	2492.8	5
96.5	94.8	96.4	95.4	94.3	99.1	98.2	108.7	96.1	104.7	104.5	107.5	2394.3	6
106.8	105.5	105.6	105.3	103.3	101.9	101.2	96.8	102.5	106.5	108.8	94.2	2438.5	7
96.6	93.9	94.2	94.6	96	99.6	111.8	108.6	95.7	104.1	97.8	94.9	2376.1	1
94	103.5	103.5	110.3	95.1	99.7	106.4	109.7	94.6	109.1	108.9	94.7	2415.1	2
96.9	95.6	98	109.6	94.4	96.2	112.3	110.4	99	100.8	96.7	100.4	2404.5	3
95.8	93.9	94.3	96.9	95	98.9	112.6	107	96.6	103	110.2	97.8	2397	4
110.3	111.8	107.6	95.2	99.1	100.6	106.3	106.9	103.4	106.4	108.8	96.2	2464.4	5
95.1	96.2	95.6	103.4	111	108.2	109	109	93.8	99.5	107.9	96	2415.2	6
101.6	99.3	99	100.3	99	97.8	112.3	107.9	95.7	102.9	107.9	99	2411.9	7
104.9	93.8	106.2	94.1	97	99.5	108.9	108.5	101.5	101.6	93.7	101.3	2406.5	1
96.9	97	96.9	98.5	99.5	102.8	106.2	109.6	99.2	104.1	106.9	97.2	2404.2	2
95.2	95	94.4	96.2	98.7	100.7	110.3	93.6	98.9	100.8	94.2	94	2369.9	3
109.8	108.4	95	98.4	96.2	96.3	97.9	108.6	94.9	104.5	110.2	97.3	2410.9	4
94	109.1	109.4	112.3	93.7	103.2	109.1	94.9	97.9	100.8	104.5	97.5	2410.1	5
98.9	97.3	101.1	99.6	101.1	101.5	97	93.6	99.6	102.4	101.1	96.6	2373.7	6
96.1	103.1	97.2	102.9	102.5	103.3	109.8	111.9	98.3	100.3	97.3	99.6	2411.9	7
111.9	108.4	94.9	97.6	94.7	110.3	112.1	108.7	95.7	104.2	100.6	100.2	2446.1	1
94.6	111.9	110.5	97	100	102.4	109.4	107.3	100.8	100.6	95.1	99.3	2406.9	2
93.5	106.5	97.9	110.5	97	95.5	110.1	111.9	99.3	102.3	109.7	99.2	2419.6	3
100.8	107.7	96	94.2	96.2	94.9	110.1	110.2	100.3	98.5	108.6	100.5	2412.1	4
98.2	100.8	111.4	110.2	93.5	99.1	112.1	93.9	96.8	106.9	108.5	99.1	2414.9	5
98.9	97.4	95.9	102.9	99.6	98.2	107.7	95.6	96.8	104.7	96.6	98.3	2386.4	6
104.6	103.1	102.1	100	95.9	100.5	95.6	95.9	101.8	96.6	94	100.2	2396.3	7
94.1	109.8	112	109.3	98.4	111.2	108.8	108.7	97.9	104.6	97.3	100.3	2442.8	1
106.8	110.6	111.4	111.4	103.7	94.5	111.4	108.8	95.5	102.5	108.5	100.3	2423.5	2
100.8	93.7	105.2	107	99.5	94.3	108.2	111.3	96.6	104.1	94.9	100.9	2392.9	3
95.7	98.3	96.1	109.8	94.2	95.5	112.2	106.6	97.2	104.7	101.2	101.1	2390.3	4
95.5	107	105.3	106.8	97.3	100.6	109.1	96.1	102.9	101.9	104.1	99.5	2423.5	5
102.1	99.9	98.8	96.9	102	103.2	97.3	99.5	105	105.2	93.8	99.7	2402.1	6
105.2	98.6	99.5	97.2	96	110.5	111.8	110	95.7	105	110.6	98.7	2443.6	7
109.3	112	108.3	112.4	108.3	94.3	110.2	109.7	111.1	101.5	110.3	98.8	2499.5	1
102.4	101	94.2	94.8	94.2	109.1	108.6	108.2	101.2	100.9	94.4	97.9	2399.1	2
112.5	95.3	96.4	96.9	96.9	97.3	111	106.4	97.1	101	110.2	99.2	2416.9	3
110.1	112.2	108.9	108	108.8	96.2	112.3	111.1	112	99	108.9	96.5	2483.8	4
108.4	108.2	106.3	106.3	107.7	95.1	106.2	111.4	102.2	104.6	108.9	96.3	2442.8	5
103.5	102.3	101.7	101.4	99.9	97.4	109.9	96.9	98.3	103.3	102.1	100.6	2416.8	6
103.9	105.7	105.9	102.7	106.1	97.2	109.3	97.9	97.4	107.1	108.3	96.4	2436.9	7
94.3	94.2	94.8	95.4	99.2	97.7	110.3	111	101.4	101.3	96.3	94.5	2401.1	1
96.1	102.5	101.3	110.8	108	96.5	111.3	109.6	100.7	99.7	95.7	95	2427.8	2
95.8	109.2	109.3	110.6	108.6	97.3	109.9	112.2	99.1	106	94.3	93.9	2439.4	3
98.1	99.6	107.1	105.5	94.4	96	112.4	106.6	95.4	105.7	107.8	100.4	2427.5	4
95.3	110.5	95.2	111.1	99	112.3	98.6	97.1	102.8	103.4	104.5	94.3	2423.7	5
106.2	106.4	99.9	105	103.1	95.6	108.4	102.6	107.7	109.3	108.5	97.6	2441.6	6
99.7	106.6	105.9	105.4	100.1	95.4	107	97.4	104.5	101.2	110	96.7	2423.3	7
111.4	110.6	107.3	110.6	101.2	96.2	99	98.4	107	101.3	107.4	110.2	2451.2	1
104.1	104.1	107.2	94.2	95.4	108.6	110.5	109.3	95.8	101.8	94.4	94.3	2401.1	2
96.7	94.8	94.8	93.5	94.7	94.2	106.9	108.7	96.4	104.1	110.6	99.6	2373.2	3
99.1	97	96.6	99.5	100	97.4	110.4	97.3	98.7	105.3	110.1	100	2427.6	4
99.7	98	96.1	95.9	98.5	98.6	110.1	99.4	103.3	107	108.4	96.5	2404.3	5
103	104.3	103.9	103.4	101.8	95.7	93.7	95.2	99.6	104.2	109.4	98	2403.9	6
106.1	105.8	105.9	106	105.6	99.4	99.8	99.9	103.7	103.4	96.6	93.5	2427.1	7
100.4	99.8	99.1	99.5	100.6	98.5	110.4	112	97.8	102.4	93.8	98.8	2416.7	1
97.1	96.9	98.7	98.4	97.9	107.9	109	111.4	96.7	101	99.1	100.1	2412.4	2

13	14	15	16	17	18	19	20	21	22	23	24	SUM	DOW
99.8	100.4	98.8	98.9	100.4	97.9	111.8	93.7	101.5	106	110.6	99.3	2412	3
102.6	102.3	100.9	101.1	102.4	99.9	107.4	99.2	96.3	107.3	105	100.8	2430.7	4
99.4	100.7	99.7	97.2	103.2	100	110.6	94.2	96.4	99.6	110	99.3	2412.2	5
106.5	102.1	104.3	101.5	98.3	101.8	111.2	100.2	103.2	102.7	93.8	99.9	2410.1	6
107.2	105.7	104.6	104.6	102.1	100.9	112.2	99.5	104.8	108.4	110.5	94.4	2443	7
102	101.3	99.3	100.1	100.9	97.6	109.4	96.6	94.4	105.1	98.9	93.6	2389	1
93.8	95.3	94.4	97.7	99.4	98	110.3	109.8	99.5	102.8	94.9	101.3	2403.4	2
96	97.9	101.1	100.2	102.9	99.1	109.2	94.6	101.7	104.8	96.6	98.7	2404.5	3
103	103.4	100	102.1	95.8	99.5	109.5	99.3	102.8	106	106.5	95.2	2425.7	4
98.4	99.5	97.8	97.6	99.7	102.5	95.5	94.1	100.8	107.2	110.2	99	2409.9	5
102.8	99.9	102.9	98.7	98.7	100.3	95.4	98.1	100.4	100.2	108.9	95.8	2407.5	6
105.4	106	103.2	99.6	98	100.3	109.5	95.5	96	101.8	95.9	100.8	2421.2	7
97.5	96.2	94.5	96.4	94.9	111.4	109.8	107.9	97.3	110.2	96.1	95.5	2399.6	1
94	95.3	94.5	97.8	99.6	98.1	110.4	110	99.6	102.8	94.8	101.3	2404.7	2
96.1	98	101.2	100.4	103	99.2	109.3	94.6	101.9	104.8	96.7	98.7	2406.2	3
97.7	97.9	100.4	100.4	96.3	99.1	97.7	103.7	104.1	109.1	94	101	2401.4	4
102.1	101.9	99.2	98.6	101	111.9	112.2	98.1	105	106	93.8	96.1	2426.6	5
101.5	102.1	103.1	98.6	98.9	108.6	93.9	101	101.6	104.5	102.1	95.9	2394.7	6
103.7	105.5	106.7	105.5	102.1	94.5	96.5	100.1	101.1	104.8	109.5	100.4	2429.4	7
96.2	101	103.1	97.8	95.5	99.1	110.5	94.5	100.5	100.2	98.4	97.7	2405.6	1
102	100.4	99.9	96.8	98	99.6	109.6	101.7	95.6	101.7	93.9	97.8	2401.9	2
98	102.6	99.4	99.1	100.8	94.9	111.3	109	100.1	106.1	107.3	94.7	2430.7	3
101.3	102.6	100.4	100.2	101.2	96.3	107.2	109.7	97.8	106.6	98.2	94.3	2431.8	4
97.1	102.5	100.3	98.9	100.6	97.4	107	97.1	95.7	106.6	109.3	99.5	2430.1	5
99.9	105.5	105.1	104.6	103.9	97.3	94.7	93.6	97.4	103.5	97.4	101.1	2415.1	6
105.9	107.9	107.1	104.8	101	95.6	108.3	97.1	104.5	104.3	110.6	100.2	2451.1	7
99.1	97.2	97.9	99.8	101.5	102.7	111.6	95.7	101.9	106.9	97.1	97.8	2402	1
102.2	102	101.9	102.5	103.6	99.6	108.3	97.6	103.7	107.2	98.1	96	2440.9	2
101.5	106	105.8	100.1	107.2	96.9	100.2	94.9	100.6	105.5	107.3	95.6	2444.3	3
103.3	99.6	99.7	99.6	100.2	102.8	107.7	110.9	98.2	100.3	94.8	95.5	2423.4	4
101.4	102	100.4	99.6	99.5	102.9	110.4	101	98.2	104.8	106	101	2455.2	5
105.1	106.7	105.8	104.9	101.9	103.3	96.2	97.9	105.8	107.8	107	94.5	2443.9	6
110.4	110.6	109.5	107.1	104	102.2	110.9	97	102.8	107.9	110.6	98	2475.5	7
105.9	105	104	104	103.7	99.1	112.3	95.8	95.8	102.5	101.2	95.1	2435.2	1
107	100.3	106.5	100.6	100.1	104.7	108.9	94.3	103.2	103.8	100.2	98.2	2436.4	2
101.6	99.6	104.8	105.5	106.2	100.5	110.2	98.2	103	105	108.7	97.5	2437.8	3
101.5	101.2	99.7	106.5	106.3	100.8	108.3	98.1	101.9	101.9	107.5	96.2	2429.7	4
100	107.1	106.9	107.1	106.5	101.8	95.7	97.7	104.7	109	93.6	95.6	2429.6	5
107.8	110.5	109.8	108.5	105.7	107.3	97.9	96.3	100.9	108	109.6	95	2465.7	6
107.1	107.3	104.5	103.5	106.5	102.3	106.3	94	95.8	104.7	110	100.2	2445.8	7
102.7	101.5	99.5	100.1	101.2	97.1	107.1	94.2	93.7	102.7	100.4	96.2	2384.4	1
99.7	99.4	97.3	97.2	103.1	96.7	110.5	111.6	102.9	95.8	100.8	100.8	2419.3	2
97.5	97.1	102.2	101.5	100.9	95	111	111	102.9	99	108.2	99.3	2411.7	3
96.9	102.3	103.4	97.2	95.8	95.6	106.9	109.7	96.5	99.4	110.2	100.3	2423.1	4
106.5	106.5	109.4	106.6	103.5	103.8	99.5	103.8	105.5	109	109.7	95.8	2470.3	5
105.3	104.5	105	101.6	103.7	98.4	97.9	99.1	103.5	107.3	101.1	99.5	2429.4	6
106.5	106.5	109.4	106.6	103.5	103.8	99.5	103.8	105.5	109	109.7	95.8	2470.3	7
103	104.1	102.8	100.6	105	102.9	106.1	109.2	101.4	99.5	100.8	99.5	2420	1
95.6	96.8	97.7	97.8	103.1	96.1	111	111	97.5	97.3	97.9	97.5	2410.6	2
99.9	99.1	101	97.5	94	110.9	112.3	111.4	100.6	97.2	109.6	108.4	2445.3	3
101.5	99.6	96	101.6	101.6	112.4	115.2	108.6	95.8	98.6	108.7	108.6	2440.9	4

13	14	15	16	17	18	19	20	21	22	23	24	SUM	DOW
13	14	15	16	17	18	19	20	21	22	23	24		
37,795	37,838	37,815	37,832	37,635	37,447	38,769	38,856	37,553	37,387	38,003	36,427		
365	365	365	365	365	365	365	365	365	365	365	365		
									37,387	38,003	36,427		
									365	365	365		
37,795	37,838	37,815	37,832	37,635	10,564	10,752	10,746	10,545					
365	365	365	365	365	104	104	104	104					
					26,883	28,017	28,110	27,008					
					261	261	261	261					
0.00	0.00	0.00	0.00	0.00	0.00	0.00	0.00	0.00	0.00	0.00	0.00		
0	0	0	0	0	0	0	0	0	0	0	0		

2010 running cost
Is this a leap year? n

Month	Day		Year	1	2	3	4	5	6	7	8	9	10	11	12
1		1	2010	91.8	95.1	96.6	93.9	96.2	91.2	96.1	98	107	95.1	107.6	107.6
1		2	2010	91.8	95.1	96.6	93.9	96.2	91.2	96.1	98	107	95.1	107.6	107.6
1		3	2010	92.7	98.1	95.6	96.3	97.2	94.8	95.9	104.4	101.7	99.5	91.2	93.5
1		4	2010	98.6	96.3	98.5	97.5	94.2	91.4	107.4	103.4	97.8	92.1	94.8	92.9
1		5	2010	98.6	96.5	93.2	98.1	96.1	97.7	96.6	106.6	102.4	100.2	97.3	96.8
1		6	2010	98.1	95.7	98.4	99.2	96.9	92.8	91.8	106.9	103.3	93.5	97.2	97.6
1		7	2010	96	95.2	98.6	97.9	94.5	93.5	106.8	105.5	100.3	94.6	92.5	92.8
1		8	2010	96.7	94.4	97.2	97.5	95.1	91.2	106.6	103.7	98.9	95.9	94.6	94.7
1		9	2010	94.7	91.5	97.5	98.8	95.7	96.9	98.2	91.5	100.8	97.3	94.5	95.7
1		10	2010	94.2	95.3	94.2	95.2	91.8	96.5	92.4	92.4	107.1	102.5	95.3	94.7
1		11	2010	91.3	98	98.1	92.7	96.3	99.3	107.2	104.5	100.6	98.2	97	98.4
1		12	2010	94.5	97.3	98.1	98.6	95.8	92.5	107.2	106.4	102.4	93.1	97.4	97.4
1		13	2010	95.5	97.6	91.6	91.5	98	94.2	91.2	100.5	99.7	96.1	94.1	95.1
1		14	2010	91.3	98.3	91.1	96.7	96.8	92.8	104.7	102.3	98.8	96.4	95.9	97
1		15	2010	97.6	94.4	95.9	95	98.9	95.2	102.2	97.2	96.5	91.9	98.4	91.8
1		16	2010	92.2	97.2	98.1	99.3	95.8	97.8	91.1	105.5	100.8	96.1	95.9	95.3
1		17	2010	95.9	96.3	98.2	98.5	97.6	92	95.2	106.4	97.2	99.5	94.8	95
1		18	2010	96.5	92.3	97	96.7	93.7	92.8	106.1	104.3	96.8	104.6	105.8	105.8
1		19	2010	91.5	95.7	98.5	98.8	95.6	93.2	105.4	100.9	97	106.7	103.8	103.7
1		20	2010	97.2	95.4	97.7	97.8	91.8	97.3	102.5	98.9	95.6	103.4	107.8	92.1
1		21	2010	98.3	91.8	95.7	96.6	96.7	96.7	100.4	97	93	107.2	98.4	92.2
1		22	2010	96.3	93.9	95.3	96.6	98.6	98	106.9	99.7	99.3	103.8	108.3	103.6
1		23	2010	97.2	96.5	99.3	98.6	96.4	99.2	98.2	106.3	104.5	100.2	98.9	98.8
1		24	2010	96.1	97.3	98.6	93.9	98	98.6	91.4	95.6	106.9	102.2	97.4	96.3
1		25	2010	97.1	96.3	97.5	97	91.3	96.6	103.4	101.8	95.6	92.6	107.6	104.3
1		26	2010	95.9	91.4	96.4	96.7	91.5	96.4	102.4	101.9	95.6	104.8	93.1	93.9
1		27	2010	97.5	95.1	97.4	98.5	94.5	91.7	104	102.9	96.9	92.2	103.7	103.7
1		28	2010	95.2	91.1	95.5	96.3	97.6	97.1	102.9	100.1	94.1	93.7	92	97.3
1		29	2010	94.4	96.1	96.4	96.6	94.3	91.6	105.3	103	97.5	91.9	91.7	91.4
1		30	2010	95.8	91.1	96	97	95.1	96.4	96.4	92.7	103.1	96.5	93.4	92.9
1		31	2010	97.1	94.6	97.4	98.5	97	98.3	106.8	98.7	98.5	99.7	96	100.4
2		1	2010	91.1	98.1	91.4	97.5	98	95.7	95	107.3	101.3	98.1	93.6	91.4
2		2	2010	97.9	95.4	96.5	93.7	97.9	96.7	91.6	106.4	102.1	95.3	100.7	100.6
2		3	2010	97.1	92.6	93.5	94.2	93.1	97.4	92.1	107.4	104.2	96.1	93.5	93.5
2		4	2010	97.2	92.1	95	94.5	91.2	97.6	104.1	101.6	98.7	98.2	95.1	95.9
2		5	2010	97.8	91.3	93.4	93.6	91.3	98.2	92.4	107.1	103.1	93.7	98.7	98.5
2		6	2010	91.6	98.4	92.3	92.1	93.1	94.6	91.6	106.6	102.1	97.3	94.8	93.2
2		7	2010	98.7	97.7	92.1	91.8	92.5	95.9	96.6	95.2	101.9	97.5	96.5	98.9
2		8	2010	97.9	96.8	97.9	91.6	98.5	95.2	94.9	106	97.7	93.3	93.2	109.1
2		9	2010	97.7	95.1	97.4	99.1	96.9	94.6	91.7	104.7	97	96.7	92.6	95.4
2		10	2010	98.4	95.4	98.3	98.8	97.9	95.1	103.7	104.1	102.1	100.3	96.8	91.5
2		11	2010	94.8	96.6	98.9	99.3	96.9	95.1	91.3	105.7	99.6	95.7	92.3	93.7
2		12	2010	96.5	96.7	94.3	91.2	95	97.1	104.1	101	102.3	93.2	99.3	95.4
2		13	2010	91.6	98.3	92.2	93.2	92.4	96.4	94.4	91.8	104.6	103.4	100.6	100.9
2		14	2010	91.1	99	92.8	94.4	93.1	98.1	97.4	95	104.6	102.1	99	98.9
2		15	2010	98.3	91.8	94.4	93.8	92.3	95	107.1	104.4	99.1	98.1	95.6	96.2
2		16	2010	97.4	91.8	94.7	95.1	92.3	99.1	106.8	101.8	103.6	94	94.4	95.7
2		17	2010	91	95	93.5	93.8	92.2	98.8	105.9	102.6	99	97.1	94.7	94.8
2		18	2010	95.2	99.3	92	94	91.7	99.1	91.6	102.1	104.1	96.1	93.5	92
2		19	2010	95	98.3	91.1	92.2	98.4	98.1	104.3	101.2	103.9	94.9	93.9	93
2		20	2010	98.4	96.9	94.3	92	91.4	96.3	93.3	105.2	106	102.9	100.5	101.6
2		21	2010	95.7	94.3	92.8	93.8	92.7	97.6	97.7	96.3	105.7	103.2	99.8	99.4
2		22	2010	95.5	91.7	93.6	94.6	93.4	95.7	91.9	91.3	106.7	102.3	98.7	99.9
2		23	2010	96.3	91.2	93.4	94.8	91.8	98.7	107.4	105.6	99.5	96.6	93.5	93.1
2		24	2010	91.1	98.7	91.9	92.6	95	97.5	104.7	102.2	103.2	99.8	96	96.5
2		25	2010	91	98	91.1	91.5	99.1	95.4	105.5	100.9	99.8	100.5	94.2	93.6
2		26	2010	96.5	97.5	91.1	91.6	96.5	96.2	91.9	100.7	99.4	96.7	94.1	93.4
2		27	2010	95	97.2	91.2	92.8	91.7	96.2	91.6	98.8	104.9	100.1	94	97.1
2		28	2010	94.3	97.3	91.5	92.7	91.1	95.8	95.5	93.3	102.3	99.3	100.8	98.8
NA	NA		NA												
3		1	2010	97.9	92.6	93.7	95	92.7	97.8	107.4	101.4	96.5	94.1	94	94.5
3		2	2010	97	91.7	94.9	95.5	95.2	99.2	104.2	101.4	100.6	94.8	94.4	95.9
3		3	2010	96.2	92.6	95.9	95.7	92.7	98.7	92.5	104.9	99.4	93.9	93.9	94.4
3		4	2010	95.5	92.3	93.8	95.6	93.1	96.4	104.5	102.5	97.9	95.8	94.9	93.8
3		5	2010	97.9	97.5	94.9	95.4	93.6	97.7	92.4	102.9	98.7	93.9	95	94.1

2010 running cost
Is this a leap year? n

Month	Day	Year	1	2	3	4	5	6	7	8	9	10	11	12
3	6	2010	97.5	98.4	92.3	93.6	91.5	93.1	98	105.9	102.3	95.7	93.4	94.1
3	7	2010	98.3	96.8	91.1	93.6	92.7	95.6	95.5	95.7	102.2	98.5	98	97.9
3	8	2010	94.4	97.9	93.3	95.8	91.2	95.7	103.7	106.7	99.8	91.9	92.9	92.6
3	9	2010	96.2	94.8	99.1	91.3	97.5	92.6	104.8	100.7	94.7	95.2	105.3	104.7
3	10	2010	97.1	96	91.5	95.6	91.4	97.7	106.7	97.6	93.5	92.2	92	91.2
3	11	2010	91.3	99	93.5	94.7	91.7	96	105.6	105.7	103.8	96.1	97.2	98.9
3	12	2010	98.9	94.6	92.2	90	94.8	99	92.4	102.4	99.1	101	98.6	98.8
3	13	2010	95.8	91.6	93.4	95.5	93.6	96.7	94.2	91.2	107.5	103.2	100.2	99.8
3	14	2010	95	94.9	88.4	88	92.1	91.7	91.3	92.1	106.3	106.1	104.9	105.1
3	15	2010	92	91.3	89.6	87.1	92.8	91.1	94.4	95.9	105.3	106.2	105.6	103.7
3	16	2010	92.1	92.5	89.6	88.3	95.9	95.9	93.2	93.2	107.5	108.3	103.8	109
3	17	2010	94.8	91.3	59.9	0	92.1	95.1	98.2	96.8	91.2	105	103.9	107.5
3	18	2010	91.7	95.2	89.8	89.7	95.2	95.9	95.8	95.3	97.2	103.5	109.1	108.1
3	19	2010	99.3	94.1	92.1	89.4	95	91.2	96.4	96.4	106.2	103.7	103.2	104
3	20	2010	95.3	93	94.8	95.8	94.7	96.9	94.5	95.9	95.5	103.3	103.5	109
3	21	2010	94.8	91.8	95.3	95.9	93.3	97.1	94.7	92.3	93.3	104.9	105.8	104.9
3	22	2010	96.5	92	92.8	95.7	92.7	98.5	99.7	105.5	102.7	93.4	93	93.7
3	23	2010	97.9	98.1	92.4	94.4	91.5	96.6	106.7	104.3	101	92	91.7	92.9
3	24	2010	96.9	95.1	97.5	91	97.4	95.2	107.2	103.8	99.8	91.1	104.5	91.7
3	25	2010	91.6	97.7	94.2	96.6	95	92.4	105.4	101.6	97.5	95.1	109.3	106
3	26	2010	92.6	92.5	96.2	98.4	91.3	94.6	107.5	104.1	99.4	91.4	108.7	107.9
3	27	2010	94.8	91.6	96.7	98.1	96.5	99.1	93.1	107.2	106	100.5	99.2	100
3	28	2010	95.3	91.5	94.3	95.7	94.2	96.8	96.6	94	102.3	101.1	98.7	100.4
3	29	2010	95.4	92.4	92.1	95.2	91.7	98	106	102.9	103.3	95.1	94.6	93.8
3	30	2010	97.5	99.3	94.1	92.2	98.4	94.6	107.4	105.8	98.8	91.3	92.5	94.1
3	31	2010	98.2	97.5	91.3	93.2	98	94.5	95	104.5	97.3	92.2	94	95.3
4	1	2010	97.5	91.7	93.5	94.1	99.3	98.2	91.9	104.3	102.6	94.8	92.9	94.8
4	2	2010	97	91.7	94.2	94	93.1	97.8	99.8	107.4	100.9	94.1	94.9	96
4	3	2010	97.9	92.3	94.2	94.5	99.3	92.6	97.1	105.4	105	101	102.1	103.2
4	4	2010	99.2	92.3	94.9	94.9	91.4	97	97.8	92.1	101.4	101.7	100.9	100.8
4	5	2010	91.1	95.9	96.4	96.3	100.4	102.3	99.5	95	96.8	109	105	108.3
4	6	2010	97.7	93.6	95.9	95.5	91.7	103.9	103.6	96.2	91.1	105.7	108.5	107.9
4	7	2010	91.7	93.8	96.1	95.1	107.4	102.5	102.7	92.9	105.2	108	106.8	109.4
4	8	2010	107.1	94.1	93.9	93.8	106.9	100.9	100.7	96.1	105.5	109.6	108.5	107.9
4	9	2010	107.5	97.7	93.9	93.3	106.2	103.5	103	91.1	107.4	110.7	110.3	108
4	10	2010	106.8	102.7	106.2	106.5	105.5	95.2	99.7	91	105.9	110.6	109.6	109.2
4	11	2010	101	106.6	91.5	91.6	106.2	103.8	102.5	94	103.4	105	107.9	108
4	12	2010	94.5	98.3	96.9	91.4	95.4	94.3	104.3	103	104.8	106.4	104.9	108.7
4	13	2010	92.5	96.2	91.2	97.7	95.3	92.4	104.6	97.9	92.4	107.3	105.1	106
4	14	2010	92.9	96.7	93	93.8	95.8	94.6	101.8	97.7	93.9	104.5	107.1	106.7
4	15	2010	93.3	96.7	91.1	92	97.3	96.4	102.3	100.7	93.9	105.9	104.1	106.8
4	16	2010	92	94.6	98	98.5	95.4	95.8	101	96.9	92.8	104.9	106.4	105.1
4	17	2010	97.4	94.5	98.5	93	97.3	93.2	91.1	103.3	101.9	91.8	105.4	105.4
4	18	2010	98.3	95	98.4	94.6	97.2	92.6	93.9	91.4	99.4	96.4	94.7	93.1
4	19	2010	93.2	95.5	93	96	93.9	104.2	103.4	98	94.2	95.9	107.1	107.9
4	20	2010	97.4	98	91.8	92.1	93.2	106.8	106.2	103.3	98.8	99.7	103.1	98.6
4	21	2010	96.2	98.5	92.1	92	95.1	97.6	104.7	101.6	94.2	91.5	99.9	106.3
4	22	2010	94.4	98.3	91.6	92.4	97.7	97.8	104.6	103.1	96.3	91.8	91	107
4	23	2010	92.8	96.7	93	92	97	98.1	105.5	102.5	95.5	94.8	92.1	92.6
4	24	2010	92	98	92.1	92.1	98.4	94.3	93.9	103.4	101.1	97.3	93.6	93.6
4	25	2010	93.5	98	92.7	93.2	91.5	95.3	96.7	102.2	101.3	98.2	100	98.5
4	26	2010	94.9	93.8	93.3	92.1	96.6	97	93.3	103.2	97.4	94.7	91.8	103.7
4	27	2010	95.3	91.6	94.1	92.9	97.5	96.7	105.6	102.5	96.5	93.4	105.7	98.6
4	28	2010	95.9	93.8	92.4	91.4	96.9	96.6	104.9	101.5	96.7	93.4	91.3	104.3
4	29	2010	93.6	98.1	91.1	92.4	98.2	97.7	105.1	103.4	104.2	96.6	96.7	97.8
4	30	2010	95.1	96.5	92.6	93.2	99.3	97.9	106.4	103.3	102.6	94.3	93.7	98.5
5	1	2010	104.2	105.7	92.4	93.6	92	106.6	107	105.1	96.2	93.1	102.3	91.3
5	2	2010	105	101.9	92.1	93.7	93.2	105.3	91.6	102.4	102.3	100.1	95.3	93.5
5	3	2010	106.3	91.1	92.8	94	92.2	92.1	102.9	99	91.1	108.3	109.4	107.4
5	4	2010	104.2	105.3	91.6	92.5	99	104.4	100.1	98.2	100.8	103.7	104.1	107.4
5	5	2010	92.1	96	98	96.8	96.3	106.8	99.1	97.3	107.5	105.9	104.2	108.9
5	6	2010	91.7	95.2	97	97.9	95.8	106.6	99.1	96.2	103.9	107.2	104.9	107.6
5	7	2010	105.4	94.3	96.2	97.3	95.5	106	98.8	93.6	108.8	105.7	107.1	106.6
5	8	2010	97.9	94.5	96.9	98.1	97.3	93	92.4	103.6	106.4	103.7	98.3	98.6
5	9	2010	99	96.7	99.1	92.5	98.1	95	97.4	96.8	107.4	105.3	100.3	99

2010 running cost
Is this a leap year? n

Month	Day	Year	1	2	3	4	5	6	7	8	9	10	11	12
5	10	2010	92.5	95.8	98.1	99.1	97.5	96.3	106.7	104.8	103.5	99	91.5	91
5	11	2010	94.2	98.2	91.3	91.3	98.3	97.1	107.5	105.6	103.6	93.9	97.5	94.1
5	12	2010	95.1	98.1	97	91.3	97.9	98.7	93.2	106.3	97.8	95.7	97	91.5
5	13	2010	97	95.8	98.4	99	98	97.1	107.4	102.8	101.4	93.8	97.5	93.4
5	14	2010	92.5	95.5	97.4	98.1	95.8	95.5	107.1	105.6	97.1	94.1	97.5	93.7
5	15	2010	95.3	95.7	92.2	98.7	95.2	98.1	92.2	94.2	93.7	104.8	108.1	106.3
5	16	2010	94.2	95.6	97.7	99.1	97.2	97.1	96	95.8	98.4	96	103.5	107.8
5	17	2010	91.8	93.7	96	97.1	91	91.1	95.5	93.2	104.2	106.9	110.8	112.7
5	18	2010	93.8	94.5	95.9	96.2	94.5	96.5	96.2	93	109.5	107.7	107.9	113.8
5	19	2010	99.2	93.3	94.8	96.9	93.9	95.6	93.5	93.7	103.4	109.5	113.2	112.3
5	20	2010	98.3	91.5	93.6	94.7	93.2	95.8	94.2	93.1	104.6	107.9	110.9	110
5	21	2010	94.5	97.2	98.9	91.6	98.7	97.2	95.3	92	103.5	107.9	107.9	110.5
5	22	2010	99.2	95.1	96.9	98.7	98	94.3	93.6	107.1	102.8	102.9	102.2	97
5	23	2010	98.1	94.8	97.4	99.2	97.8	94.6	95.6	96.8	92.4	107.4	100.3	102.5
5	24	2010	96.9	96.1	97.7	98	96.3	96.7	105.4	107.1	95.6	92.2	108.7	95.4
5	25	2010	98.6	94.8	96.5	96.4	95.9	94.4	105.4	106.4	96.5	94.1	92.2	94.1
5	26	2010	97.9	95.3	98.1	98.4	96.8	95.7	106.1	101.9	99.3	96.1	93	95.2
5	27	2010	97.4	96.1	97.4	99.1	97.2	96.3	106.2	100.4	98.6	95.7	104.4	91.8
5	28	2010	98.3	94.7	96.3	96.8	96.9	96.7	107.3	104.6	101.4	93.5	92.6	95.1
5	29	2010	95.8	94.4	96.6	99.1	97.7	98.3	91.5	91.3	103.8	102.7	102.4	97.3
5	30	2010	98.2	94.9	97.5	99.1	97.9	94.7	95.7	96.9	92.5	107.3	100.2	102.5
5	31	2010	99.3	95.8	98	98.8	98.1	95	94.9	96.2	94.7	106.2	98.4	101.5
6	1	2010	102.2	93.6	97.3	98.8	96.8	105.4	101.6	100.6	103.4	105.1	107.7	113.2
6	2	2010	105.2	92.1	95.2	96	94.8	102.8	101.1	95	104.7	103.9	110.1	110.9
6	3	2010	105.8	92.3	95.4	97.3	94.7	103.2	102.4	96.4	108.9	107.9	109.3	110.7
6	4	2010	105.8	92.6	95.2	96.1	93.3	100.8	99.5	94	103.3	107.9	108.5	113
6	5	2010	101	104.9	93.9	94.9	94.5	103.9	107.2	101.4	108	109.4	107.9	109.2
6	6	2010	104.7	91.1	95.3	96.9	96.4	93.2	102.1	99.5	99.2	104.6	106.6	106.2
6	7	2010	107	93.8	96.4	97.9	95.4	103.6	102.6	91.1	104	108.9	109.7	113.2
6	8	2010	106.9	94.3	97.5	97.2	94.7	104	103.5	92.1	108.4	110.4	114	111.2
6	9	2010	107.5	95	96.6	98.8	96.4	107.2	100.2	94.5	107.5	107.9	110.8	110.2
6	10	2010	106.7	92.6	96.8	97.6	98.2	106.4	98.1	93	108.3	109.7	109.7	110.1
6	11	2010	105.9	92.9	96.7	97.4	96	106.5	103.3	96.2	104.1	107.9	109.7	109.6
6	12	2010	104.6	92.6	96	97.5	96.4	104.9	101.6	97.4	92.6	103.7	109	106.7
6	13	2010	107.5	94.9	98.3	99.2	97.7	92	103.7	99.6	93.3	107.8	108	107.5
6	14	2010	97.6	94.8	98.5	91	98.1	95.5	105.4	100.4	98.2	93.7	101.6	107.1
6	15	2010	104.5	91.9	106.6	106.8	105.4	101.7	97.9	97.8	105.9	106.7	108	109.4
6	16	2010	105.4	92.4	95	96.1	93.9	103.6	97.2	98.7	106.9	106.9	108	106.7
6	17	2010	104	91.6	95.9	97.6	95.4	104.6	99.3	100.6	109.1	106.1	110	108.1
6	18	2010	103.7	91.2	94.2	95.5	93.7	102.3	103.8	97	106.3	103.7	109.4	109.4
6	19	2010	103.9	91.6	94.8	96.6	95.5	106.3	107.3	103.5	94.3	108	104.5	107.9
6	20	2010	104.5	92	96.1	97	97	96.7	107.1	97.6	96.5	98.2	103.3	107.8
6	21	2010	97.2	104.3	98.1	99.8	103.5	93.8	93.2	106.9	112.9	115.7	116.5	116.9
6	22	2010	97.7	103.4	98.5	99.9	98.1	96.2	107.3	111.8	110.4	116	119	116.1
6	23	2010	99.4	104.2	99.4	101.4	97.9	96.6	108.6	107	117.9	117.5	114.4	114.1
6	24	2010	97.2	102.8	98.3	99.6	96.8	94.4	106.7	105.9	109.9	114	114.3	118.9
6	25	2010	97.7	102	98.6	98.8	96.7	94.9	96.4	107.9	114	118.3	114.3	114
6	26	2010	94.5	100.4	96.9	98.5	98	99.2	97.1	105.7	107.9	113.8	115.6	116
6	27	2010	95.1	101.6	98.2	99.6	98.4	100.4	99.6	91.8	105.5	110.6	109.9	113.8
6	28	2010	97.2	91.6	97.6	98.4	95.1	94.9	105.2	106.9	98.2	96.3	96.2	107.1
6	29	2010	96.4	94.5	98.1	97.5	96.7	94.6	107	107.1	97	95.3	91.9	91.3
6	30	2010	94.7	94.2	97.4	98	95.4	92.7	104.3	106.6	95.6	93.4	105.8	108.7
7	1	2010	98.1	94.4	95.4	96.2	95	96.9	93	105.1	98.5	103.9	105.5	106.6
7	2	2010	98.9	94.4	96.1	96.4	94.9	99.3	94.8	107.1	102.4	96	104.6	103.9
7	3	2010	97.1	91.5	97.1	96.6	96.3	93.7	95.4	94.7	102.9	98.7	101.4	98.9
7	4	2010	98.3	94.7	98.3	97.5	97	94.7	98.9	96.6	101.2	103.9	94.3	96.2
7	5	2010	98.3	94.8	98.3	97.5	97	94.8	98.9	96.6	101.1	103.9	94.3	96.1
7	6	2010	98	91.3	98	95	94.5	97.2	95.6	104.7	99.8	107.8	106.6	103.7
7	7	2010	96.5	92	96.5	95.7	94.6	96.3	93.3	104.1	98.1	103.8	107.7	109.2
7	8	2010	96.4	91.6	96.4	94.9	91.3	95.3	93.9	104.4	101.1	94.4	107.1	107.9
7	9	2010	97.3	91	97.3	95.3	91.6	96.7	95	107	103.4	95	105.8	108.4
7	10	2010	95.6	97	95.6	94.5	91.4	98.9	94.5	101.2	105.5	98.3	99	97.6
7	11	2010	97.1	91.1	97.1	96	95.6	91.1	97.3	95.7	105.6	100.8	100.8	98.4
7	12	2010	98.5	94.7	98.5	96.5	95.1	97.5	95.9	106.4	102.6	95.1	109.2	108.6
7	13	2010	97.3	91	97.3	95.1	94.2	96.6	95.5	105.8	101.4	93.7	108.7	104.6

2010 running cost
Is this a leap year? n

Month	Day	Year	1	2	3	4	5	6	7	8	9	10	11	12
7	14	2010	97.1	91.6	97.1	95	94.1	96.4	95.4	107.1	102.6	95.1	96.4	106
7	15	2010	97.7	91	97.7	95.5	94.1	96.4	93.6	106.9	104.2	96.7	107.8	108
7	16	2010	96.4	95.7	96.4	94.6	91	95	94.4	106.9	98.2	99.1	92.4	91.2
7	17	2010	96.9	92.5	96.9	95.8	94.8	97.9	94.7	91.1	106.8	99.6	99.6	97.8
7	18	2010	97.1	91.2	97.1	95.8	95.1	94.3	96.9	96.1	106.1	99.1	101.1	99.6
7	19	2010	97.7	94.1	97.7	95.6	94.1	91.3	95.2	106.1	101.2	91.6	103.4	108
7	20	2010	95.7	95	95.7	95.1	91.1	95.6	95	106.1	100.7	91.1	106	106.1
7	21	2010	97.1	91	97.1	95.6	91.6	96.1	95.4	107.5	104.1	99.1	94.3	92.9
7	22	2010	98	91.7	98	96.3	94.7	97.1	95.2	98.6	98.8	99.6	94.5	93
7	23	2010	98.1	94.5	98.1	96.9	94.9	97.8	94.6	107.4	104.2	94.4	109.3	105.5
7	24	2010	96.4	91.1	96.4	96.5	95.3	92.5	93.6	92.6	107	99.6	99.5	99.1
7	25	2010	95.4	96.5	95.4	95.9	95.3	95.7	95.5	94.9	104.1	98	98	96.6
7	26	2010	94.7	94.2	94.7	95	91.3	96.3	93	101.4	95.7	107.9	104.4	104.6
7	27	2010	93.8	98.3	93.8	91.3	98.3	93	105.4	101.9	95.7	108	106.2	105.4
7	28	2010	96.2	94.2	96.2	95	91.3	96.7	93.8	104.6	99.9	92.3	105.9	106.8
7	29	2010	96.4	94.2	96.4	95.1	91.3	95.7	93.7	106	100.4	96.4	108.1	108.7
7	30	2010	96	99.3	96	91.7	96.5	94.4	92.3	102.5	100.3	93.1	104.8	108.8
7	31	2010	96	94.2	96	95.7	95	99.1	94.5	95.9	107.4	98.8	98.6	96.5
8	1	2010	98.2	94	96.8	98	97.1	93.9	97.9	106.8	103.5	97.1	96.5	94.5
8	2	2010	97.1	95.7	96.6	98.4	95.2	98	104.7	105.6	99.6	105.1	107.4	104.1
8	3	2010	98	94.3	96.3	96.7	94.6	97.2	93.1	104.6	98.4	105.8	104.8	103.6
8	4	2010	97.8	94.5	96.8	97.5	94.6	95.8	91.7	105.4	94.5	103.8	103.3	107.4
8	5	2010	91.8	96.2	97.9	98.5	96.7	97.7	105	107.5	95.4	102.9	104.4	104.9
8	6	2010	92	97	98.9	97	97.2	98.2	105.9	106.6	95.5	101.3	105.1	107.2
8	7	2010	96.5	94.4	96.4	98.9	97.2	93.2	96.2	104.6	100.5	99	92	98.5
8	8	2010	97.1	93.9	96.1	97.4	96.2	92.9	97.2	106.2	102.5	95.2	95.5	91.8
8	9	2010	96.3	93.7	95.6	96.7	94.5	95.8	91.6	99.3	95.2	104	107.9	111.5
8	10	2010	96.6	93.8	95.8	96.3	93.7	95.4	103.7	100.1	93.7	106	106.6	106.6
8	11	2010	95.8	93.4	96.3	97.2	95.1	97.1	92.7	103.8	98.6	104.3	107.3	106.6
8	12	2010	94.4	91.6	93.6	95.2	93.6	94.2	100	100.1	94.4	108.5	108	107.4
8	13	2010	97.3	94.7	96.6	97.9	97	91.9	105	104.7	94.5	105	105.3	105.3
8	14	2010	96.9	94.6	96.8	99.3	98.2	93.2	97.3	106.3	100.7	98.3	91.8	107
8	15	2010	98.5	95.9	97.3	97.5	98.5	95.7	91.4	107.3	106.4	98.5	93.3	94
8	16	2010	91.4	96.5	99.2	98.5	95	98.2	92.7	104.3	93.3	105.3	108.1	105.6
8	17	2010	96.5	94.7	94.5	97.4	94.2	96.6	104.6	104.2	99.3	106.4	103.6	108
8	18	2010	91.9	96.9	97.8	95	97.1	98	105.4	106.8	95.6	105.6	108.4	103.8
8	19	2010	98.6	94.9	97.7	98.5	95.8	96	104.1	105.6	98.4	107	106.9	106.9
8	20	2010	97.8	95.5	97.6	98.7	95.7	98.6	106.5	102.4	98.5	93.5	106.5	103.4
8	21	2010	93.6	92.2	94.8	96.8	95.9	92	95.1	91.3	103.6	94.9	91.9	101.5
8	22	2010	92.7	96.8	98.9	91.3	93.7	97.8	93.7	94.5	101.1	102.3	95.6	93.4
8	23	2010	92.9	98.7	93	91.7	99.3	93	99.7	102.2	96.9	106.4	107.3	104.7
8	24	2010	91.7	97.2	99.2	97.9	97	95.5	106.3	107.2	97.8	101.3	103.8	105.7
8	25	2010	93.4	97.8	99.3	95	97	97.9	106.9	106.7	94.8	91.3	103.8	106.3
8	26	2010	91.3	95.9	97.3	98.4	95.4	95.9	107.5	104.7	95.4	105	103.2	107.4
8	27	2010	93.2	95.7	96.7	98.9	96.3	96	106.1	102.3	98.6	103.8	105.5	107.4
8	28	2010	96.2	93.5	96	97.5	96.5	93.7	95.8	92.2	97.1	97	91.1	103.7
8	29	2010	92.5	96.2	99.2	91.2	97.9	96.1	91.9	91.8	106.9	101.4	99.8	97.2
8	30	2010	93.2	98.1	98.3	93.6	97.4	98.1	107.3	105.6	99.8	103.2	103.4	106.8
8	31	2010	97.4	95.5	97.7	98.6	95.7	97.8	107	102.5	98.2	109.5	104.8	108
9	1	2010	95.7	95.2	97.9	98.4	96.9	107.3	107.3	104.3	93.6	106.1	105.2	106.8
9	2	2010	103.5	93.7	96	96.4	95.8	105.8	104.9	102.4	92.5	109.3	107	107.1
9	3	2010	93.4	96.2	97.3	98.4	97.7	107.1	106.9	104.2	93.2	106.8	105	104
9	4	2010	107.2	94.1	96.1	96.9	96.2	91.2	104.6	102.2	100	93.1	103.7	109.3
9	5	2010	92.2	96.3	93.9	92.4	91.6	97	92.9	93	100.7	96.4	94.9	92.8
9	6	2010	107.4	93.1	95.3	96.3	95.4	91.4	104.5	103.2	99.3	91	106.2	105.5
9	7	2010	98.1	94	95.2	96.4	94.5	105.8	106.8	102.3	91.4	105.4	107.7	107.9
9	8	2010	92.7	96.2	97.6	98	96.7	107.5	100.6	104.1	95.4	108.6	104.6	103.9
9	9	2010	92.3	95.7	97.5	98.5	96.1	107.2	107.3	97.4	95.1	109.2	105.5	106.9
9	10	2010	92	94.9	97	97.9	96.1	105.9	106.7	103.7	96.8	105.3	106.5	106.4
9	11	2010	106.9	93	94.9	96	94.7	91.2	104.3	100.6	97.5	91.9	106.6	103.5
9	12	2010	107.5	93.4	96.1	97.6	93.7	93.2	107.3	107.2	97.8	100	93.6	103
9	13	2010	92.1	95.9	96.9	97.3	95.1	106.7	106.6	101.7	91.5	108.7	107.2	109
9	14	2010	92	96	97.6	98.5	95.8	106.5	105.1	103.5	94.4	104.8	108.3	105.2
9	15	2010	106.7	94.9	96.1	96.8	94.2	105.4	102.1	103.2	93.9	105.6	105.4	107
9	16	2010	91.3	96.1	96.2	97.8	94.1	106.4	105.9	102.7	92	104.2	104.8	106.6

2010 running cost
Is this a leap year? n

Month	Day	Year	1	2	3	4	5	6	7	8	9	10	11	12
9	17	2010	92	95.7	96.5	97.3	96.1	105.9	105.6	101	98.9	106.1	105.3	104
9	18	2010	92.3	94.9	96.7	98.5	97	92.8	104.2	102.5	100.5	96	92.7	91.4
9	19	2010	94.2	97.9	92.4	91.9	93.1	95.9	91.4	92.1	102.9	99	98.5	95.3
9	20	2010	96.9	94.5	95.1	96.3	96	95.3	107.4	105.2	102.8	96.8	91.7	91.9
9	21	2010	96.7	95	91.3	94.6	95.7	92.8	105.3	103.3	101.7	96.5	96.9	104.2
9	22	2010	96.5	95	91.1	94.2	99	91.7	93.8	101.4	100.3	94	96.4	106
9	23	2010	95.3	98.3	95	94.1	97	91	96.1	102.1	100.2	96.4	107.9	103.6
9	24	2010	93	97	98.1	99.2	96.9	96.8	105.1	104.5	95	105.9	103.6	108.1
9	25	2010	92.3	97.6	98.5	97	99.2	94.8	97.4	104.4	98.5	100.6	94.2	93
9	26	2010	92.4	95.3	97.4	98.4	98.4	95	96.3	107.4	105.8	98.4	98.6	94
9	27	2010	92.5	95.6	98.2	99.1	97.1	94.7	100	103.1	95.7	93.8	107.8	95.6
9	28	2010	96.2	95	91	94.2	99.3	92.1	105.8	104.2	101.7	98	92	99.1
9	29	2010	97.1	91.6	94.3	94.7	98.4	92.5	105.1	103.6	99	96.2	96.6	91.6
9	30	2010	98.1	95	94.3	98.8	91	92.2	105.5	102.9	102	97.7	92.9	91.3
10	1	2010	93	95.9	97.7	98.2	98.1	98	91.9	105.2	95.5	91.3	104.2	102.5
10	2	2010	92.5	96.2	97.5	99.2	97.7	93.4	97	104.6	99.5	92.6	105.1	91.5
10	3	2010	91.6	95.9	98.1	97.9	98.8	94.4	94	91.3	107	102.6	95.1	94.4
10	4	2010	93.1	96.5	97.5	98.7	97.1	97.1	91.6	107.2	98.9	92.3	104.2	106.8
10	5	2010	94.8	97.7	99.1	99.3	97.1	94.8	106.3	102.5	99.3	91.8	108.3	106.7
10	6	2010	94.2	98.2	99.3	97.9	97.4	97.1	92.1	106.8	99.3	92.6	107	98.3
10	7	2010	93.7	97.5	98.5	99.3	97	94.8	92.8	107.3	96.3	100.4	108	104.8
10	8	2010	97	93.2	96.1	98	96	95.6	103.7	98.6	91.8	101	103.8	108.7
10	9	2010	93.7	96.9	98.9	97.9	99.2	94.4	98.3	105.2	100.4	95.4	93.8	94.5
10	10	2010	94.5	97.7	96.5	91.2	99.2	97.2	92.4	92.7	107.3	97.3	99.7	98.2
10	11	2010	95.1	97.8	98.5	97	97.9	92.7	103.7	100.7	94.6	109.1	104.2	104.5
10	12	2010	93.1	98.1	98.9	97.9	97.2	92.1	106	102.6	92.1	107.9	107.5	106.7
10	13	2010	94.8	97.9	97.8	97.5	98.5	96.4	106.7	106.4	99	92.5	107.3	108.7
10	14	2010	97	98.3	98.4	95	98	92.3	91.4	101.4	99.7	92.1	109.3	105.5
10	15	2010	94.8	98.3	98.8	97.5	99.3	91.7	92.2	101.2	100.4	97.8	107.3	105.3
10	16	2010	94.5	98.9	91.6	94.6	91.4	98.2	92.6	92.5	102.1	103.2	99.3	96.4
10	17	2010	94.8	98.3	96.5	91	96.5	97	91.7	92.3	102.1	100.4	98.8	94.4
10	18	2010	92.8	96.7	98	99.3	96.7	96.7	105.3	101.5	93.3	103.5	103.5	106.6
10	19	2010	94.3	98.1	99.2	96.9	98.6	95.6	91.5	107.3	97.8	106.2	99.8	106.7
10	20	2010	94.9	98	99.1	99.2	97	96.8	106.2	104	94	91.8	107.6	109.1
10	21	2010	94.5	97.3	98.6	97.9	98.8	94.8	106.9	106.1	93.9	97.3	106.4	107.9
10	22	2010	91	94.9	98.2	99.1	97.2	97.4	106.5	104.3	94.8	107.4	106.1	103.8
10	23	2010	91.5	96.2	97.3	99	97.8	93.2	93.7	92	102.1	95.9	93.2	92.8
10	24	2010	94.8	97.8	99.1	92.5	96.5	96.3	97.6	91.9	103.1	99.4	102.9	101.8
10	25	2010	98.3	94.4	94.9	95.1	92	92.6	96.1	106.4	98.6	91.8	91.4	107.5
10	26	2010	96.7	98.8	93	91	99.3	91.4	96.1	107.5	97.9	92.5	91.4	91.6
10	27	2010	96.8	99	95	91.6	99.2	93.2	101.4	106.8	99.4	91.6	108.6	107.5
10	28	2010	96.8	97	91.1	91.7	96.5	92.2	105.7	102.9	101.3	91.8	91.9	91.6
10	29	2010	95.1	98.7	98.8	97	98.3	91.3	93.7	106.3	99	92.9	106	97.8
10	30	2010	97.5	94.2	96.7	99.2	98.7	96.2	98.4	107.3	107.5	102	98.5	99.2
10	31	2010	92.1	96.6	98.4	91.2	91.5	98.4	95	94.1	100.5	104.4	103.1	100.5
11	1	2010	91.2	99.3	91.7	96.3	91.4	92.1	105.1	104.9	103	92.9	91.5	105.9
11	2	2010	95.5	92.6	97	98.9	96.3	97.2	107	103.6	96.8	92	103.7	108.3
11	3	2010	97.1	96.6	91.3	94.6	97.5	98.1	107	107.3	100	92.2	104.4	92.1
11	4	2010	96.5	94.7	97	97.8	94.8	92.4	104.7	100.4	101.3	93.1	92.3	92.9
11	5	2010	96.9	94.6	97.9	98.2	95.6	92	107	107.5	99.7	91.2	91.9	91.8
11	6	2010	93.7	95	96.3	98.5	96.3	96.9	97	107.1	104.5	99.5	96.1	95.7
11	7	2010	95.2	94.3	97.9	98.8	98.4	95	92.6	93.2	101	98.3	101.7	98.6
11	8	2010	97	96.4	99.2	93	96.6	93.1	92	106.6	101.6	93.4	92.1	93.3
11	9	2010	97.1	94.5	96.6	97.7	94.7	97.8	107.3	104.9	99.3	92.7	108.8	102.6
11	10	2010	96.7	91	96.6	96.3	95	91.7	106.7	103.7	98.2	93.4	91	106.8
11	11	2010	96.6	91	96.3	96.6	95.5	91.3	106.9	101.8	97.9	95.1	91.1	93.2
11	12	2010	99.1	96	96.5	92	98.5	97.2	95.1	91.3	100.8	97.4	94.7	94.2
11	13	2010	97.9	95.8	99.2	92	99.3	91	92.7	92	106.5	103.6	100.9	98.9
11	14	2010	98	95.9	99.1	97	99.3	91.1	93	93.9	104.5	101.9	103.1	101.4
11	15	2010	99.2	97	91	91.9	99.3	95.2	107.4	104.7	100.2	100.6	95.5	93.3
11	16	2010	96.8	91.1	96.3	97.7	94.4	91.7	103.2	104.1	96.9	91.7	103.6	104.4
11	17	2010	99	95.4	98	99.2	96.5	92.6	98.6	107	102.1	92.3	92.8	91.5
11	18	2010	99.3	95.9	94.3	91.3	96.6	93.1	91.6	102.1	103.1	95.2	92.7	93.5
11	19	2010	99.3	96.8	99.1	91.6	98.1	93.7	92	101.7	102.9	95.7	94	94.2
11	20	2010	97.2	95.8	99.2	93	98.8	93	95.4	91	98.7	96.2	96.4	94.9

2010 running cost
Is this a leap year? n

Month	Day	Year	1	2	3	4	5	6	7	8	9	10	11	12
11	21	2010	97.8	96.8	95.1	98.1	94.2	98.9	92.9	93.7	101.9	102	96.8	102.5
11	22	2010	98	96	99.1	99.2	96.7	92.2	107.5	106.2	94.4	96.9	103.8	105.6
11	23	2010	93.1	97.5	94.3	91.3	99.1	96.2	101.6	97.9	91.9	107	108.3	106.4
11	24	2010	99	95.4	98	99.2	96.5	92.6	98.6	107	102.2	97.9	98.5	94
11	25	2010	92	99	96.8	97.3	94.3	94.5	92.4	107.2	97.2	95.8	91.6	106.3
11	26	2010	98.4	96.1	98	98.3	95.4	98.1	93.2	92.7	100.7	94.3	96.8	95
11	27	2010	93.1	99.3	96.3	98.7	96.4	99.3	97.7	107.5	104.5	98.6	100.4	99.1
11	28	2010	98.3	97	91.3	96.2	92	94.9	97.9	91.5	103.6	103.5	104.1	102.8
11	29	2010	96.9	96.7	99.1	91.9	97.4	94.3	92.4	100.7	104.3	98.7	97.3	94.8
11	30	2010	96.4	91.5	98	97.5	97.4	92.2	91.1	107.5	100.7	97.6	94.6	92.9
12	1	2010	94.5	96.1	98.1	98.4	96.1	97.8	106.8	92.4	102.3	99.6	94.3	98.4
12	2	2010	92.5	95.8	98.2	98.2	96	95	104.3	102.9	103.4	96.5	98.4	95.8
12	3	2010	95.7	96.1	97.7	97.1	94.5	93.7	93	97.3	101.6	98.1	100.5	96.9
12	4	2010	98.3	94.5	97	96.7	95.2	99.2	91.8	96	96.1	100	96.8	99.6
12	5	2010	97.9	91.6	95.6	97.3	96.1	95	94.4	96.8	107.5	103	99.6	97.9
12	6	2010	95.2	98	98.3	96.6	91.3	95.4	106.3	104.9	98.4	93.1	98.8	98.6
12	7	2010	96.5	96.6	97.5	97.9	95.1	93.4	104.9	106.2	100.6	100.3	95.9	94.3
12	8	2010	94.9	97.7	94.3	98.8	96.6	96.7	95.1	92.8	107.3	102.7	98.8	96.7
12	9	2010	91.1	96.9	99.2	99.2	96.4	94.8	92.4	104.3	100.3	100.8	98.5	97.6
12	10	2010	91.3	96.5	98.4	97.3	94.5	94.3	92	103.7	100.5	99.6	96.7	95.1
12	11	2010	97.5	95.7	97.1	97.8	95.9	98.2	91.8	93.8	103.1	100.1	98.3	97.2
12	12	2010	91	96.6	98.4	99.2	98.1	94.1	96.2	91.7	101.4	105.6	102.4	102.8
12	13	2010	94.7	97.8	99.1	99.3	96.5	95.3	105.6	106.7	99.9	97.7	97	99
12	14	2010	91.4	96.8	99.1	98.4	95.5	95.1	107	104.6	104.1	96.7	103.1	100.9
12	15	2010	95.5	98.6	94.3	96.5	97.7	91.5	107.4	92.9	104.9	99.3	98.2	102.7
12	16	2010	96.1	96.5	97.9	96.9	97.7	98.1	91.7	92.8	100.9	97.9	97.6	101.9
12	17	2010	94.6	97.5	98.7	98.3	97.4	97	107.4	105.9	107	98.7	103.2	101.9
12	18	2010	94.3	97.6	98.7	98.3	97	94.3	91.9	95.5	105.4	105.2	101.8	102.1
12	19	2010	94.3	97	99.3	99.3	97.2	96.5	95.7	98.7	93.9	107	107.3	106.7
12	20	2010	99.3	95.8	97.9	98.1	95.9	94.7	106	106	101	97.8	94.4	94.9
12	21	2010	93.6	96.6	99.1	99.3	97.4	95.8	91.4	98.6	103	100.4	98.4	93.6
12	22	2010	91	97.2	99.2	98.4	96.1	95.7	107.5	107.2	100.9	94.9	93.2	100
12	23	2010	91.2	94.2	96.5	97	95.5	95.9	93.4	96.1	97.7	98.6	94.6	95.3
12	24	2010	97.9	94.1	95.9	96.3	97.5	97.9	105.5	106.7	100.1	99.4	96.4	95.7
12	25	2010	97.7	96	99.1	97.9	98.5	95.1	97.2	93.4	105.1	105.9	104.4	103.8
12	26	2010	97.7	96	99.1	97.9	98.5	95.1	97.2	93.4	105.1	105.9	104.4	103.8
12	27	2010	91.4	97.5	99.1	99.1	96.7	93.7	94.4	97.9	106.7	99.3	103.1	101.9
12	28	2010	98.8	95.5	96.9	96.8	94.7	96.3	94.2	104.7	99.4	100.5	96.1	96.6
12	29	2010	96.5	91	95.9	96.2	91.5	94.2	92.5	93.9	98	98.4	93.8	92.5
12	30	2010	91.2	97.2	94.4	95.6	91.3	98.7	107.5	102.2	99	99	98.7	93.5
12	31	2010	96.8	94.3	99.1	93.7	99.2	96.4	105.7	103.1	96.6	99.6	94.3	92.2

Based on Hour Ending	1	2	3	4	5	6	7	8	9	10	11	12
Total $ by Hour	35,190	34,853	35,018	34,955	34,993	35,230	36,338	36,874	36,680	36,453	36,837	36,926
Total Obs by Hour	365	365	365	365	365	365	365	365	365	365	365	365
Off Peak Hrs ($)	35,190	34,853	35,018	34,955	34,993	35,230	36,338					
Total Off Peak Obs by I	365	365	365	365	365	365	365					
Mid Peak Hrs ($)								36,874	36,680	36,453	36,837	36,926
Mid Peak Obs by Hour								365	365	365	365	365
Priority Peak Hrs ($)												
Priority Peak Obs by Hour												
Total $ Check	0.00	0.00	0.00	0.00	0.00	0.00	0.00	0.00	0.00	0.00	0.00	0.00
Total Obs Check	0	0	0	0	0	0	0	0	0	0	0	0

Total Avg. $/Mwh	$100.06
Off Peak Avg. $/Mwh	$97.37
Mid Peak Avg. $/Mwh	$101.31
Priority Peak Avg. $/Mwh	$104.59

13	14	15	16	17	18	19	20	21	22	23	24	SUM	DOW
93.2	94.1	95.2	98.1	91.1	106.9	104.1	96.1	94.9	100.4	101.4	93.7	2345.4	5
93.2	94.1	95.2	98.1	91.1	106.9	104.1	96.1	94.9	100.4	101.4	94.4	2346.1	6
96.7	95.5	99.5	97.5	100.5	91.3	104.1	107.8	96.8	100.2	107.5	96.1	2354.4	7
94.8	95.2	97.8	95.2	93.2	108.3	108	108.3	108.2	107.2	92.2	95.7	2369	1
100.5	97.6	98.8	97.4	95.4	109	107.2	108.8	92.8	103.3	92.9	96.3	2380.1	2
97	95.7	95.3	93.9	93.8	95.1	107.6	106.9	92	95.9	106.9	96.2	2347.7	3
93.5	96	94.1	92.6	91.9	105.9	108	107.5	92	99.7	106.8	94.1	2350.3	4
95.6	95.3	95.6	95.9	94.7	94.8	104.3	106.3	97	96.9	101	92.4	2336.3	5
96.2	95.8	93.7	99.3	97	104.9	108.7	104.9	95.9	95.2	101.7	92	2338.4	6
99.9	102	97.1	101.8	100	92.9	105.7	96.4	95.2	104.1	104.3	92	2343	7
93.7	98.9	95.8	99.1	96.8	93.2	109.6	106.2	95	94.4	93.5	98.6	2356.4	1
98.1	97.7	99.6	97	94.3	94.3	106.2	105.5	104.8	94.7	91.9	91.5	2356.3	2
99.2	96.2	94.7	94.1	93.7	97	106.3	105.2	103.5	99.2	107.4	91.6	2333.2	3
96.2	97.7	97.8	94.6	93.3	103.7	108.3	108	93.1	94.4	103.6	95.4	2348.2	4
93.5	95.1	95.1	92.6	93.4	108.3	108.8	106.4	93.7	100.7	104.4	103.8	2350.8	5
97.3	97.8	98.5	96.8	92.1	107.9	104.3	104.3	94.3	99.1	103.9	106.6	2368	6
97.7	98.2	99.4	97.7	96.2	92.8	108	108.8	107.5	94.7	100.9	104.3	2372.8	7
104.5	92.7	95.4	95.2	94.8	107.6	108	108.1	109.2	93.3	102.2	105.7	2409.1	1
92.7	95.9	97.8	97.1	95.6	106.3	108	107.6	107	92.1	93.9	94.7	2379.5	2
91.8	93.4	92.3	92	98.9	105.1	106.5	103.8	105.4	94	100.7	94.2	2355.6	3
95.4	97.3	98.2	95.3	94.7	103.9	106.5	107.1	98.9	99.5	101.2	94.2	2356.2	4
103.6	106.3	100.2	92.1	93.7	103.8	106.9	109	96.6	100.7	104.2	94.8	2412.2	5
103	103.3	97.8	100.6	96.6	98.8	108.2	105.2	94.5	103.3	106	96.1	2407.5	6
95.2	96.9	94.7	98.9	96.3	95	104.9	103.6	93.6	94.6	103.5	94.5	2344	7
95	91.7	107.6	104.9	103.1	108.7	108	112.4	104.6	95.3	106.7	92.3	2411.4	1
106.3	107.4	105.8	105.1	107.8	107.4	113.8	110.4	103.4	95.8	107.2	93.1	2423.5	2
107.4	108	96.4	105.7	108.8	103.7	108.9	108	107.5	97.2	105.8	91.9	2427.4	3
95.2	107.4	91.5	103.8	103.1	108.8	107.9	108	103.3	96.9	106.3	91	2376.1	4
92.9	105.8	105.5	106.3	109	106.4	104.8	105.5	106.7	93.2	104.2	106.8	2397.3	5
99	98	98.2	96.7	92.8	93.9	104.2	105	98.1	100.1	102.8	93.8	2329	6
95.1	95.1	93	98.5	93.6	101.2	106.2	106	105	96.7	102.7	95.9	2372	7
100.7	91.9	92.4	102.5	105.9	106.1	108	107.1	103.5	93.4	101.9	94.7	2366.6	1
99.6	94	95.8	94.9	99.1	92.6	104	107.8	95.5	98.3	93.1	93.9	2343.4	2
94.3	96.4	96.8	93.6	97.4	91.7	105.2	107.8	97.6	103.7	104.2	96.5	2339.9	3
96.3	96.7	100.1	96.7	97.8	96.8	107.9	107.8	97.4	103.7	98.7	94.2	2355.3	4
100.2	100.3	93.8	98.8	94.9	92.1	107.8	108.1	96.9	100.7	104.4	98	2355.1	5
99.6	98.7	97.9	92.9	107.6	103.6	108.3	105.2	91.8	96.6	104.5	96.6	2351	6
94.1	93.2	96.5	94.6	93.6	92.1	107.7	104.4	104.8	93.9	103.4	97.6	2331.2	7
108.2	104	107.5	105.2	107.6	106.4	111.9	110.8	104.4	96.3	106.9	94.4	2435.7	1
97.9	109.2	91.1	106.1	92.2	103.3	107.1	108.4	109.6	97.9	102.5	97.3	2381.5	2
102.3	93.2	104	109.4	108.9	104.3	106.6	107.9	109.2	97.6	106.9	95	2427.7	3
92.3	108.1	109.4	107.9	109.4	109.4	103.6	104.6	104.6	99.9	102	96.8	2407.9	4
93.6	92.9	92.5	91.5	94.7	94.3	107.1	103.8	95.7	97	105.5	96.2	2330.9	5
104	96.8	104.2	101.6	98.6	93.1	91.3	91.8	95.2	103.9	98.6	94.8	2333.7	6
100.4	100.1	101	99.7	103	97.3	92.1	104.1	94.7	97.2	104.5	99.1	2358.7	7
94.7	93.2	93.8	94	93.1	92.9	107.9	105.9	91.6	106.9	91.5	93.4	2325	1
93.4	91.3	91	92.4	91.4	91.6	108.3	107.9	107.5	98.7	100	91.8	2332	2
93.2	94.3	95.3	92.3	91.1	91	109	108	104.6	99.4	107	92.4	2336	3
93.1	94.2	92.4	91.4	106.6	107.3	109.6	103.7	92.1	96.9	103.3	91.5	2332.8	4
92.5	91.8	92.2	91.7	94	92.5	103.5	105.2	91	97.1	104.5	95.5	2315.8	5
103.4	97.3	97.5	103.5	97.7	93.8	99	91.4	99.2	97.3	101.4	91	2351.3	6
99.2	99.7	98	102.6	99.9	96	103.9	108.8	95.7	104.1	91.4	91.6	2359.9	7
99.4	98.6	96.3	94.4	96.4	93.1	106.3	108.9	94.1	93.9	94.2	92.1	2323	1
100.4	99.2	96	91.4	95.6	104.2	103.9	107.6	106.1	92.5	95.5	98.6	2352.9	2
96.2	96	93.8	92.6	94.5	106.8	107.7	108.9	92.6	100.5	102.6	95.9	2357.3	3
95	93.4	92.8	94.5	106.8	91.8	103.8	108	103.5	100.4	102.9	96.9	2350.4	4
94.5	95.7	97	95.6	96.3	95.9	106.1	104.7	92.3	100.4	107	97.2	2328.3	5
98.5	99.6	98.7	96	99.8	97.2	91.6	108.9	91.8	102.3	105.4	97.6	2338	6
102.1	99.9	99.9	98.1	93.4	96.2	104.2	107.5	92.6	104.2	91.6	95.1	2337.5	7
												0	
94.1	94	92.6	93.6	92.2	92.4	106.2	109.9	99	94.4	104.6	97.9	2328.5	1
93.7	95.8	94.7	91.3	93.3	93.2	104.2	108	98.8	96.6	105.7	92.5	2332.6	2
94	95.8	94.2	93	91.7	93.1	101.8	104.1	103.8	95.9	106.9	93	2318.1	3
94.1	92.3	93.4	91.6	96.4	92.3	107.9	108	104.6	97.2	103.7	98.7	2336.3	4
92.2	91.8	93.3	92.3	92.1	92.4	101.8	99	91.7	95.5	103.6	95.1	2294.8	5

13	14	15	16	17	18	19	20	21	22	23	24	SUM	DOW
93.9	96.9	94.7	95.6	93.6	91.5	92.1	109.4	93.8	97.7	101.6	93.3	2309.9	6
97.8	96.6	97.2	97.8	96	94.8	91.4	104.3	105.1	94.9	105.8	97.7	2335.3	7
93.2	91.7	98.9	108.5	108.5	91.1	106.9	108.8	104.7	92	105.5	92.9	2358.6	1
102.1	107.3	106.8	104	109.2	108.8	107	109	108.8	103.1	101.4	106.7	2451.1	2
93.1	97.3	97.2	94.7	94.1	100.3	107.6	106.7	109.3	95.8	101.2	96.7	2336.5	3
100.8	102.6	103.2	102.9	99.1	94.7	105.8	105.9	97.2	103.8	91.1	93.5	2374.1	4
100.2	100.7	100.1	99.9	98.2	96.1	93.4	100.5	99.9	101.3	107.4	98	2357.5	5
103.1	99.4	102.4	102.5	99	104	94.9	91.6	101	101.8	104.8	94.8	2362	6
106.8	106.2	105.4	105.2	99.5	102.1	93.1	93.1	99	102.3	102.6	99.3	2370.5	7
105	106.1	105.3	103.5	105.4	107	106.8	113.9	107.9	104.2	93.9	96.4	2410.4	1
104.1	103.5	104.8	104.2	103.3	104.5	107	111.2	107.9	104.9	96.1	99.2	2420	2
103.2	104.2	106.9	104.4	108.3	108.5	107.9	109.8	107.9	107.1	92.3	96.3	2292.6	3
107.5	106.6	106.6	107.2	106.6	105	112.1	113.9	107.9	108.3	98.3	93.2	2439.7	4
105.9	103.3	106.9	103.3	103.3	107.9	112.4	110.1	105	108.4	95.8	97.5	2430.8	5
105.8	103.3	105.4	104.4	107.6	104.5	107.9	112.8	106.6	107.7	96.3	97.5	2432	6
103.5	103.3	103.3	105	106.4	105.9	107	109.3	107.9	106.4	96.5	94.9	2413.5	7
93.2	94	91.6	92.6	92.6	104.5	109.3	107.9	109.3	94.8	102.2	94.5	2342.7	1
93.1	92.7	105.9	91.7	108.1	108.1	106	109.6	104.1	91.5	105.8	97.1	2373.2	2
103.9	105.3	108.6	102	109.2	106.1	107.9	110.4	104.2	98.9	99.9	105.8	2433.4	3
103.4	107.6	103.3	106.8	108.8	105.5	106.9	109.6	104.1	91	101.9	105.7	2437	4
103.9	103.2	92	91.5	91.1	99.1	108.3	106.7	108.7	94	103.6	107.4	2394.1	5
102.3	98.2	99.2	100.1	103.6	98	93.4	91	93.5	102.8	107.4	97.3	2369.6	6
102.3	105.3	104.2	103.2	97.4	100	94.9	92.1	99.7	103.9	93.7	94.6	2352.2	7
96	96.1	96	94.6	93.5	92.6	105.5	108.8	103.4	95.2	100.5	96.4	2339.1	1
94	94.8	93.8	91.9	93.3	101.9	104.9	104.2	102.3	92.4	105.8	94.9	2340.2	2
91.7	92.6	108.8	92.3	91.8	109.3	105.5	107.6	109.1	95.9	106.5	96.3	2358.4	3
94	93.8	93.8	94.5	95.3	92.7	91.8	104.8	94.1	101.8	107.4	93.1	2312.7	4
95.3	96.1	95.5	95.5	97	96.7	92.2	93.5	99.3	103.7	91.9	98.5	2316.1	5
104.2	102.6	97.1	104.2	101.8	96.9	92.3	95.2	96.4	104	91.1	91	2361.4	6
100.9	99.8	98.3	99.2	99.2	98.9	96.3	93.3	99.5	103.7	96	95.5	2345	7
105.8	103.8	109.2	107.8	106.6	107.9	109.9	113.8	106.4	107.8	106.5	93	2474.5	1
106.4	108	107.9	107.2	107.9	110.3	113.8	112.8	106.5	106.2	105	92.6	2475.9	2
107.4	105.7	106.5	105	103.1	108	113.8	113.7	109.1	92.5	101.4	92.2	2470	3
108.5	108	111.8	112.3	108	109.7	114	113.8	110.1	106.9	101	96.7	2525.8	4
111.7	113.2	110.6	110.6	110.4	109.6	113.8	113.8	110.3	105.7	95.9	103.6	2541.8	5
113.2	108.9	108	108	110.7	113.8	114	114.3	113.8	106.6	93.2	102.9	2556.3	6
103.8	107.9	106.6	108	110.4	113.2	113.7	114	109.1	106.9	91.6	100	2506.7	7
108	103.5	104	104	105.6	106.4	110.4	109.2	108.1	93.7	104.3	104.7	2464.8	1
103.4	105.1	104.5	103.9	107.7	107.5	107.3	113.3	104.2	95.1	104.3	107.3	2442.2	2
103.5	109.4	107.3	107.3	106.2	104.1	107.9	113.9	106	92.7	103.2	104.6	2444.6	3
105.3	109.4	106.4	106.7	104.7	109.4	107.7	111.6	108.4	91.6	102.7	106	2450.4	4
108.1	106.7	109.3	108.7	108	107	105.1	109.2	97.7	94.3	103	93.9	2432.4	5
104.1	92.8	92.6	99.7	91.6	107.7	107.7	106.9	106.4	94.6	104.1	104.4	2385.4	6
92.1	92.8	93.1	91.5	93	108.3	105.1	110.2	92.3	94.7	95.8	97.3	2311.2	7
103.9	105.9	105.5	107.4	103.3	107.9	106.7	110	106.1	94.1	91.6	97.6	2422.3	1
109.5	105.2	106.3	104.3	105.7	105.1	111.2	108.7	91	94.7	91.1	91.2	2413	2
108.9	103.8	108.4	106.9	106.5	96	105.5	111.3	103.9	91.8	105.9	95.4	2414	3
103.1	106.2	104.3	106	103.6	105.2	106.1	112.4	103.5	90.9	104.8	107.3	2419.4	4
105	108.4	108.2	106.9	104.5	104.4	106.4	104.8	91	92.9	106.4	105.3	2396.8	5
100.7	100.3	94.1	100.6	99.5	96.8	91.8	109.1	97.2	102.1	102.9	93	2337.9	6
98.9	98.2	99.2	98.3	95	98.7	93.6	108.9	92.4	102.6	104.5	94.9	2346.3	7
91.4	91.1	91.9	106.4	100.1	100.1	109.1	107	107.7	93.9	93.7	95	2339.2	1
91.4	109.1	107.4	106.3	108.2	92.3	109.2	107.6	105.9	99.8	96.1	94.7	2398.4	2
108	107.4	104.7	105.6	106.2	106.5	104.8	113.3	105.6	96.8	103.9	105.7	2427.6	3
99.7	99.3	94.9	95.2	95.5	98.2	100.4	94	99.5	100	104.3	93.7	2349.6	4
98.2	99.4	98.1	96	97.7	98.8	96.5	107.2	100.4	101.5	107.5	98.3	2373	5
91.7	91.2	104.8	103.9	107.2	103.8	103.6	108.4	105.6	91.7	103.2	105.2	2409.8	6
92.8	91.5	92.1	91.1	109.1	107.7	107.8	110.4	106.5	91.2	97.3	103	2376.9	7
107.9	106	103.4	104.7	108.3	106	105.4	111.5	105.4	104.4	100.8	105.7	2456.1	1
110.5	106.6	112.1	107.9	107.9	109.2	110	113.8	112.5	108.4	98	101.5	2509.7	2
111.9	107.9	110.7	111.6	111.6	107.9	112.8	117.3	109.7	108.1	99.4	101.1	2518.9	3
109.2	108.9	110.1	110	110	107.9	107.9	113.8	108.5	106.9	95.4	106.1	2497.8	4
110.8	111.3	109.8	110.6	111.3	104.7	107.1	113.2	107.9	105.5	94.4	104.1	2506	5
98.8	98.4	97.6	96.3	96	95.4	94.4	93.9	95.2	101.1	106	97.3	2351.1	6
98.6	98.4	97.6	104.1	101.6	98.9	96.6	96.8	97	99.5	104.3	92.2	2372.2	7

13	14	15	16	17	18	19	20	21	22	23	24	SUM	DOW
100.2	108.8	92.8	92.2	95.7	93.6	92.9	104	95.4	99.9	105.4	93.8	2350.5	1
94.3	92.3	91.1	98.7	93.5	97.3	93.9	106	94.1	100.2	103.5	94.9	2332.4	2
91.5	91.6	100.2	103.9	98.7	94.2	92.2	106.7	94.7	96.6	104.2	91.4	2325.5	3
92.3	106.5	91.5	91.9	94.1	96.1	95.5	107.4	94	97.1	106.6	91.5	2346.1	4
91.5	103.1	91.9	93.7	98.9	100.6	98.5	91.9	94.4	105.6	107.2	97.6	2344.8	5
107.7	106.3	106.3	105.8	106.5	104.9	104.5	106.8	107.7	103.9	98.1	95.9	2428.9	6
106.5	109.5	105.2	107.7	106.3	106.5	104.2	110.6	107.9	91.7	94.6	96.3	2425.4	7
113.7	112	113.9	113.8	113.9	110.8	112.2	113.8	113.9	107	96.7	92.2	2497.9	1
112	113.2	113.6	113.9	111.9	113.2	114	113.9	112	107	96.9	97.4	2518.5	2
110	112	113.3	111.1	107.9	107.9	109.6	113.8	110.8	104.4	94.9	94.9	2489.9	3
110.5	107.9	106.7	107.3	106.7	105	109.5	109.1	106.5	104.5	95.3	94.6	2451.4	4
112.3	111.9	107.9	110.2	110.4	109.1	106.9	110.7	103.8	108.4	96.5	97.6	2480.9	5
93.3	102.6	101.4	101	99.4	98	95.5	92.6	98.3	101.4	106	97.8	2375.1	6
100	99.7	101.4	99.8	97.4	93.6	91.7	92.4	94.3	98.1	105.9	91.2	2342.4	7
105.4	109.3	104	104	104.5	93	93.1	103.7	104.3	100.1	102.6	96.1	2406.2	1
106.5	107.8	103.2	92.4	92	96	93.9	103.5	103.9	94.5	106.1	97.1	2362.2	2
94.1	103.2	107.1	103.3	103.2	93	92.4	108	91.3	94.1	105.5	97.5	2366.5	3
91.3	105.2	105.2	96.5	94.1	94.7	96.2	106.3	107.7	93.2	105	96.3	2372.3	4
103.8	103.1	98.8	103.1	93.9	97.1	98.9	92.2	100.1	100.5	105.3	94.7	2365.7	5
96	95.9	96.5	96	98.4	94.6	100.4	98.6	94.2	102.7	105.6	93.2	2343	6
100.1	99.7	101.4	99.9	97.5	93.7	97.4	92	97.1	98.2	105.9	91.3	2351.6	7
100	99.9	98.3	95.9	93	97.9	93.5	103.1	96	98.4	106.2	99.2	2358.3	1
110.6	110.2	113.1	111.8	111.5	108	108	112.5	110	106.9	95.7	100.6	2524.6	2
108	110.9	113.9	111.8	112.1	113	112.1	111	110.6	106.3	95.6	101.1	2518.2	3
113	109.4	110.6	112.5	108.5	108	108	111.5	108	105	96.9	102.1	2517.8	4
110	110.3	113.9	109.8	110.8	107	108	112.5	110.1	104.7	94.3	97.1	2498.5	5
107.8	107.5	104.5	107.3	107.9	106.7	103.8	106.8	107.7	104.5	97.1	99.9	2497.7	6
104.1	104.4	105	106.5	103.9	105.2	103.9	107.2	107.9	108.6	99.9	103.6	2456	7
113.2	113.8	113.6	113.7	112.4	109.2	109.6	113.6	112	107.2	93.3	104.8	2540	1
109.7	112.9	110.1	113.6	110.6	110.9	108.1	113.8	113	106.2	93.9	104.2	2541.2	2
113	111	113.7	113.6	113.8	111.1	113	113.7	113.9	105.3	93.1	103.1	2550.9	3
113	113.6	113.8	113.6	113.6	110.4	110.4	113.7	113.2	105.2	93.9	102.3	2543.9	4
108.9	110.8	110.8	112	109.7	111.1	111.8	108.9	108	105.7	93.1	97.8	2514.8	5
106.4	107.3	106.6	108	104.6	107.4	108	111.6	106.7	103.2	94.6	100.2	2467.6	6
106.9	105.4	107.5	103.2	109	107.8	108	110.6	109.7	104.4	93.2	104.4	2479.6	7
101.6	95.1	107.7	107.7	91.4	92.7	94.7	105.9	108.1	97.3	104.5	97.1	2385.7	1
109.4	112.5	109.8	112	110	106.7	111.9	112.8	112.4	107.5	96.1	101.3	2545	2
111.9	110.3	113.8	111.3	111.3	110.7	106.1	110.5	109	105.4	97.8	101	2509.9	3
108.1	111.9	109.4	110.3	110.8	106.7	110	110	110.8	103.6	94.8	99.7	2508.4	4
110.9	111.9	108.1	112.4	110.5	110.8	108	112.4	108	108.1	98.9	100.2	2510.4	5
106.5	106.4	104.6	107.6	108.7	104.1	104.5	106.3	103.5	105.7	98.1	99.8	2470	6
103.4	104.4	106.4	105.2	108.3	103.3	104.6	106.9	109.3	105.2	98.4	102.8	2452	7
118.7	118.7	114.1	116.4	116.1	117.5	116.8	116.6	117	113.8	106.4	92.5	2623.4	1
119	119	118.6	113.9	116.3	114	116	115.8	117.5	107.1	104.7	94.1	2630.4	2
115.8	113.9	113.9	119	116.1	113.9	118.6	116.3	113.9	113.9	103.8	94.8	2632.3	3
117.9	116.5	116.8	117.7	115.9	118.8	116.1	116.4	115.8	106.9	108.5	93.6	2619.7	4
114	117.9	118.5	116.4	115.7	118.3	116.1	116.1	113.9	113.9	109.1	92.1	2615.6	5
116	113.8	118.9	116.1	115.6	113.7	115.6	113.8	113.9	113.8	109.1	92.1	2596	6
113.9	109.9	114	113.8	118.9	113.7	118.3	119	116.3	113.7	106.3	94.7	2577	7
91.6	93.1	93.4	95	96.2	97.1	97.1	105.8	92.9	95.2	106	93.4	2341.5	1
92	92.5	100.1	91.7	92.6	93.7	94.4	107.9	95	96.2	106	91.3	2320.8	2
105.2	107.2	103.9	105.1	92.4	94	93	105.9	103.8	95.7	102.2	104.4	2399.6	3
103.6	104.1	105.4	105.3	108.7	106.6	91.5	109.1	109.3	98.5	102.7	97.2	2430.6	4
91.2	103.5	107.4	105.6	108.7	106.6	93.8	97.6	92	94.6	102.9	95.4	2388.1	5
98.3	96.7	95.7	94	100.4	100.5	99.6	94.2	97	100.6	107.5	98.4	2347.2	6
93.5	93.3	100.5	98.2	96.5	96.6	93.2	94.3	102.4	100.5	105.4	95	2341	7
93.6	93.5	100.5	98.2	96.5	96.6	93.2	94.3	102.4	100.5	105.4	95	2341.3	1
104.6	109	109	106.8	106.1	109.3	107.8	105.8	103.5	97.1	101.9	95.9	2449	2
106.1	103.7	103.6	104	107.5	104.8	107.9	105.8	106	98.8	107.4	92.1	2435.5	3
102.1	105.5	108.6	109.1	92.3	92.6	100.4	105.2	104.5	99.6	103.5	97.3	2395.4	4
104.8	106	105.3	106.7	91.3	94	93.4	103.5	91.3	95.7	103.9	95	2374.7	5
95.8	97.4	98.5	96.4	96.6	95.6	96.5	91.3	93.8	97.2	105.5	96.9	2330.6	6
97.9	98.3	100.5	98.9	95.3	98.9	98.3	92.2	95.6	99	107.5	98.6	2347.6	7
103.6	103.7	105.7	108.8	106.7	109.4	108	108.4	108.6	98.4	102.6	96.7	2459.2	1
103.3	106	104.1	105.6	107.4	106	108	104.5	106.2	97.7	103.5	96.4	2429.9	2

13	14	15	16	17	18	19	20	21	22	23	24	SUM	DOW
103.5	104.8	105.5	108.8	106.2	106.1	104	105.7	104.8	96.9	102.1	96.2	2418.5	3
103.5	106.9	107.8	108.3	108.8	106.1	105.4	106.4	109.5	95.5	107	94.3	2449.1	4
97.7	103.5	109.4	92.1	106.5	93	94.1	102	94	97.4	101.7	94.6	2337.3	5
96.2	94.8	95.3	96	91.1	91	93.6	104.8	94.4	94.1	104	95.9	2315.6	6
99.9	97.4	99	96.4	100.6	97.6	96.4	107.9	92.6	97	105.7	97.8	2357.8	7
104.7	104.8	107.4	107.4	107.6	107.3	108	105.1	108.2	96.5	101.4	95.2	2429.6	1
104.6	104.6	106.5	107.9	103.3	91.2	91.9	104.9	105.3	98.6	103	96	2391	2
108.6	106.8	105.2	109.3	108.7	104.6	107.2	104.6	109.4	99.6	104.3	98	2428.1	3
93.8	91.8	104.6	105.9	105.9	91.4	91.9	108.6	101.8	99.4	104.7	97.4	2352.7	4
103.5	105.9	109.3	108.8	98.9	94.9	108.4	103.9	108.6	98.3	101.7	94.5	2432.4	5
95.2	94.1	93.7	91.9	103.9	106.6	91.3	107.2	95.9	100.2	101.9	94.2	2335.7	6
95.1	95.5	100.7	98.2	95.9	93.7	91	108.8	91.6	100.2	103.5	96.2	2331.7	7
107	108	103.9	105.2	103.3	105	104.3	108.7	105.4	91.4	104.1	91.3	2410.8	1
107.9	107.8	103.9	105.9	107.2	107.4	108.9	107	106.6	92.5	101.1	95.9	2443.2	2
106.2	106.6	107.8	104.3	109.2	104.1	109.4	105.1	105.9	99.1	101.5	95	2427.1	3
105	104.8	106.6	107.7	108.3	103.6	105	106.5	106.1	95	101.8	95.5	2428.3	4
104.7	109.2	108.8	104.6	109.4	93.7	95.4	107.9	91.3	94.6	102.2	94.4	2391.9	5
98.2	97.5	95.5	96.8	95.2	93.3	94.5	103.9	94	94.4	103.7	95.1	2329.8	6
93.4	92	91.6	92.7	105.6	107.6	108.3	109.3	105.8	95.4	104.6	107.1	2387.7	7
106.9	107.5	108	107.8	104.9	107.4	108.7	108	108.6	106.6	99.3	104.4	2485.6	1
108	104.1	106.6	108.1	107.8	108.8	104.8	108	107.3	107.4	100.2	105	2463.5	2
106.9	107.5	103.6	107	104.7	106.7	107.2	108.1	104.6	92.7	101.2	106.6	2439.9	3
108.8	104.2	103.4	106.9	104.8	107.3	107.9	106.1	108.5	91.7	103.7	107.5	2459.7	4
108.1	105.5	107.4	106	108.1	103.3	108.5	105.4	108.4	92.9	98.9	92.3	2446.7	5
101.3	103.8	109.5	109.1	107	106.4	106.4	104.7	107	94.6	100.2	92.9	2410.3	6
105	97.2	92	91.5	109	109.6	103.2	105.4	107	97.3	102.5	105	2386.7	7
110.9	110.3	109	113.9	110.5	107.9	107.9	109.9	107.9	106.7	97.4	91.8	2466.2	1
110.8	109.8	111.8	109	107.9	106.2	108.6	109.9	108.2	91.2	99.5	92.8	2454	2
107.9	113.3	113	109.4	111.9	107.9	106.2	113.2	107.9	106.8	102.9	94.9	2483.5	3
107.9	107.9	110.9	109.8	108.9	106.6	106.8	107.9	108.1	91.1	99.5	104.7	2451.1	4
104.2	107.5	104.7	106.6	108.2	106.1	109.2	106	105.6	95.5	100	104.3	2453.1	5
93.6	106.4	109	107.5	106.2	106.9	103.8	109.3	91.6	97.3	103.8	105.8	2421.6	6
95.8	94.7	91.6	92.4	104.3	103.6	103.8	104.6	95.8	98.4	104.6	106.6	2370.5	7
109.8	109.7	108.1	108	108	105.6	105.8	112	108.3	107.2	99.6	104.6	2474.8	1
108	109	109.6	108.6	104.3	103.5	107	106.9	106.5	93.8	101.9	104.2	2463.3	2
105.8	108.3	107.3	106.9	105.2	105.6	103.5	106.4	103.8	93.2	101.5	105.5	2455.3	3
108	107.5	110.7	108.1	107.3	108.2	109.1	107.1	106.6	93.5	100.1	106.2	2482.8	4
103.6	106.2	109.6	104.9	109.6	106.7	107.7	106.4	103.9	97	99	101.5	2450.8	5
103.7	106.2	106.2	105.7	109.6	94.3	93.5	105.2	95.5	93.8	106.4	106.3	2370	6
98.3	96	94.4	93.1	95.9	99.8	108.2	109.3	93	95	100.4	92.7	2327.9	7
105.5	104.7	104.8	107.9	106	106.7	104.7	110.8	106.2	95.3	106.2	103.6	2448.2	1
109.3	104	106.1	105.2	107.2	91	105.7	107	105.1	98.8	100.5	92.8	2433.3	2
108.7	106.7	104.8	106	104.1	106.8	106.8	107.9	106.9	96.8	106.1	104.6	2456.4	3
105.3	108.9	106.6	106.8	106.8	108.2	106.7	110.5	106.2	94.2	104.6	107.5	2469.7	4
109.4	108.9	107.2	108.9	106.6	104.6	104.6	106.7	105.6	92.6	98.4	91.2	2445.2	5
103.1	107	106.4	107	104.4	91.7	92.1	109	93.2	95.7	107	107.1	2374	6
98.2	99.7	99.5	99.4	96.6	94.6	103.6	106.5	94.7	93.6	101.8	92.5	2342.8	7
108	105	107.9	108	109	104.2	108.3	110.9	105.5	91.8	102.5	105.7	2471.6	1
106.8	109	112	108	104.2	105.4	106.8	111.9	108.7	93.1	103.9	106.3	2488.8	2
112	108.8	108	107	110.3	104.5	107.9	113.9	106.7	104.7	103.9	106	2508.4	3
108.8	113.3	109.5	109	108	108.5	106.8	113.9	104.6	108.5	104	107.3	2516.6	4
108.1	110.5	113	112.1	110.4	103.9	108.3	108	104.2	91.5	101.4	103.3	2484.9	5
106.9	107.7	106.4	108.4	105.6	109.3	107.7	106.8	103.5	92	104.4	105.6	2458.9	6
93.9	95.5	95.4	94.5	92.4	107.8	108.2	106.8	109.3	94.6	102.3	92.9	2327.7	7
103.4	107.8	107.5	105.5	104.6	104.7	109.1	109.6	105.8	91.5	97.4	107.1	2442.6	1
109.6	109.7	110.9	108	109.6	104.3	108.7	111.7	108.2	91.8	100	91.3	2469.3	2
107.9	106.4	109.7	110.7	109.6	107.6	106.6	112.1	107.1	92.1	99.8	93.5	2469	3
103.8	108	110.4	108	108	105.6	107.9	110.8	103.3	91.9	98.8	91.1	2456.3	4
108	108	109.1	109.6	110.4	104.5	109.1	106.7	108	92.1	103.6	102.1	2480.4	5
105.3	104.3	107.6	106.2	109.5	105.9	108.3	106.9	106.6	92.3	103.4	104.3	2441.7	6
100.3	107.3	106.7	109.3	104.6	107.5	106.9	110.3	109.4	93.9	100.2	91.5	2438.3	7
108	108.9	107.1	106.6	107.8	106	104.6	112	109.2	91.7	100.5	103.6	2474.7	1
111.1	110.8	109.8	108.1	107.1	106.7	109.8	117.2	103.3	107.4	104	106.9	2509.9	2
105.2	106.5	109.2	107.5	107.8	106.4	108.1	110.3	105.3	99	97.5	104	2478.1	3
107.4	105.2	103.5	106.3	107.6	106.2	107.1	108.1	106.7	94.9	100.5	93.5	2445.1	4

13	14	15	16	17	18	19	20	21	22	23	24	SUM	DOW
108	108.4	105.8	109.1	108.7	106.3	108.9	105.7	108.8	98.1	99.4	106.9	2478.5	5
101.8	104.3	103.9	106.2	106	105.2	106.6	106.2	93.3	96.4	104.4	107.1	2400.9	6
95.9	94.5	94.6	94.3	92.6	92.1	108.6	105.6	96.5	96	106.4	105.6	2327.3	7
100.8	108.8	106.2	103.6	106.6	93.3	106.3	104.1	93.1	101.2	97.4	96.1	2387.4	1
107.6	108.6	109.2	107.6	108.5	94.6	104.9	106.5	91.4	98	106	95.5	2412.4	2
104.7	92.7	105.3	106.8	92.7	93.1	108.7	105.9	93.4	100.4	105.4	94.7	2363.2	3
108.7	108.8	105.5	104.7	91.9	95.5	108.1	108.5	106	94.5	102	91.9	2403.1	4
105.2	105.2	108.5	103.4	97	95.1	107.3	106.7	94.7	98	100.8	99.7	2424.8	5
105.4	105.3	109.3	107.9	105.6	107.4	106.5	106.5	102.2	98.8	107.4	102.6	2432.4	6
93.3	94.2	97.7	91.8	97.7	91.9	108.7	105.4	95.1	94.4	103.4	93.1	2344.1	7
108.5	104.9	107.3	105.5	91.9	94.1	107.2	104	103.3	98.2	104.7	95.6	2398.4	1
95.5	94.4	94.4	92.4	93.3	96.4	109.2	104.1	99.2	96.7	92.3	98.2	2334.7	2
107.9	106.7	103.6	104.6	92.5	94.6	106.1	104.2	99	100.4	106.8	97.2	2384.3	3
100.6	105.5	94.4	94	91.9	92	94	102	94.3	103.3	106.9	95.5	2336.1	4
107.3	106	105.2	107	109	103.4	108.4	99.6	91.8	100.6	104.4	92	2406.2	5
91.3	107.3	103.8	91.9	103.8	99.1	105.4	108.5	93.6	102.1	105	91	2369.6	6
93	92.1	94.1	91.8	91.5	92.2	104.7	103.7	92.9	100.1	105.6	94.1	2316.9	7
103.5	107.8	104.8	105.7	104	101	110.9	108.9	106.2	95.9	105.2	96.1	2431	1
104.2	103.5	104.8	103.9	104.2	92.3	107.1	109.6	104.2	97.4	104.6	93.9	2427.4	2
108.5	107.8	106.2	104.8	103.3	106.1	112.6	108	104	94.3	103.3	93.7	2432.8	3
105.1	109.1	108.7	109	108.1	104.4	105.2	106.7	108	93.7	100.7	105.5	2454.6	4
103.8	105.1	105.2	106.7	108.4	108.1	103.4	108.3	94.2	98.6	103.7	93.6	2422.6	5
93	91.5	92.8	91.9	91.9	99.5	107.2	107.1	93.6	104.3	105.7	92.9	2340	6
96.4	94.8	94	93.9	92.8	109	106.9	104.9	95.7	91.8	106.9	96	2347	7
107.8	105.3	103.3	105.2	103.8	104	111.9	107.4	102.4	93.4	105.2	94.7	2440.2	1
109	106.5	103.3	103.3	104.5	105.6	109.3	111.9	96.9	94.2	103.7	94.7	2443	2
103.4	107.9	105	105.6	104.7	106.1	110.3	109.8	91.6	95.8	106.1	95.3	2445.1	3
108.1	*105.3*	*106.6*	*108.9*	*106.7*	*109.5*	*107*	*109.1*	*92.1*	*96.4*	*105.1*	*95.5*	*2428.7*	*4*
96.9	106.3	107	109	103.2	95.6	108.4	104.7	93.9	101.5	104.5	94	2409.6	5
93.8	93.9	92.8	92.3	92.4	92.2	103.2	108.7	99.4	97.1	106.6	94.1	2321.8	6
98.8	92.7	91.7	109.3	104.8	109.6	110.9	108.1	96.8	96.7	102.8	93	2369	7
108.1	108.2	109.8	109.7	108.1	108.9	113.6	113.6	109.1	93.3	102.5	93.4	2472.2	1
105.7	105.1	108.4	105.7	108.4	106.1	110.6	111.9	100.9	97.5	105.7	96.4	2454.4	2
107.5	105.5	103.8	106.5	106.5	109.6	113.8	114	105.5	96	102.3	93.9	2462.6	3
107.2	107.2	112.5	111.3	112	105.1	109.3	113.7	105.3	94	101.1	91.5	2470.6	4
107.2	106.5	108	108	107.9	103.8	108.2	103.5	91.8	96.3	101.1	93.6	2436.6	5
92.4	91.6	96.9	100.3	92.3	107.3	106.6	92	94.9	102.8	104.8	95.2	2321.8	6
103.4	97.8	98	102.2	97.8	91.5	105.9	107.5	99.8	99	93.1	91.3	2361	7
109.2	106.5	108.9	104.9	107.3	99.4	111.9	106.7	100.6	97.9	107.4	97.7	2417.5	1
106.2	103.3	105	106.4	107.1	103.8	113.2	106.9	106	96.1	107	98.2	2406.4	2
96.8	105.9	107.9	106.5	107	107.8	111.7	110.8	92.2	97.5	107	97	2438.2	3
104	91.3	105.6	107	107.8	105.9	108.9	107.9	92.1	97.2	103.8	94.8	2376.8	4
102.4	108.9	104.1	109.6	93.1	106.9	104	91.6	97	103.3	104.5	107.3	2407.6	5
97.8	98	93.6	98.8	96.8	99.4	108.9	94.7	100.5	101.5	102.9	91.8	2380.1	6
97.9	96.5	96.4	94.6	94.1	105.9	110.2	103.5	104	102.2	106.1	106.6	2383.8	7
107.1	107.2	107.2	106.5	107.2	107.6	92.4	93.3	99.1	101.2	107.5	92.7	2394.3	1
106.9	106.9	108.8	100.1	108.4	109.5	112	106.3	92.2	96.8	103.7	107.5	2448	2
102.8	104.3	104.3	98.8	103.1	106.3	107.2	106.7	107.6	96.3	103	94.3	2412.9	3
92.4	99.9	103.7	107	103.8	94	109.3	105.9	91.9	97.4	102.4	94.7	2360.3	4
105.7	91.8	106.8	108.1	92.1	92.1	108.6	105.7	92.9	99	100.5	91.2	2358.8	5
95.4	96.5	96.2	95.8	94.2	93.6	105.9	92	94.9	104	103.5	92.7	2341.3	6
98.2	97.9	98	98.1	97.7	94.2	105.8	91.6	98.8	103.3	105.8	97.3	2351.7	7
98.1	104.8	92.4	106.8	95.6	91.8	109.1	107.6	94.4	97.4	103.1	93.5	2348.9	1
95.7	99.6	91.9	91.6	91.2	109	109.8	109.2	106.8	96.2	102.1	94.8	2391.9	2
104.8	98.1	92	92.1	98.1	91.2	109.3	107.9	91.2	98.1	103.1	94	2347	3
92.4	92.1	92.3	91	92.2	104.2	105.9	106.4	93.8	99.5	104.5	95.6	2323.2	4
94	95.3	94.3	91.9	92.9	103.5	109.1	95.7	96.8	99.7	103.4	94.1	2323.5	5
98.7	94.4	96.6	93.9	93	91.7	103.2	91.3	98.6	102.8	107.2	94.6	2335.8	6
99.4	97.9	96.9	96.9	94.4	93.3	103.1	93.4	100.1	100.5	92.5	98.1	2344.7	7
92	91.5	107.8	102.2	91.7	104.5	107.3	106.5	93.7	94.4	107.4	97.3	2371.6	1
109	105	105	91.3	107.2	91.6	108	108.4	92.3	97.8	103.8	96	2387.3	2
93.6	95.4	91.3	100.7	92.7	108.5	106.9	103.6	91.5	97	105.9	96.5	2348.6	3
92.8	93.2	103.2	92.1	93.5	106.5	108	105.7	92.5	98.1	104.1	95.5	2333.9	4
93.1	94.1	92.5	92.4	94.3	92.4	103.2	108.5	94.2	99.3	102.5	93.7	2319.3	5
95.1	100.1	95.2	93.4	93.4	98	106.5	91.7	95.8	100.3	103.6	106.4	2329.1	6

13	14	15	16	17	18	19	20	21	22	23	24	SUM	DOW
97.6	98.1	95.5	94.1	92.7	98	108	108.9	94.3	101.9	106	95.6	2361.4	7
103.6	106.9	105	105.5	103.7	105.6	112.5	112.3	107.7	92.4	105.9	102.6	2459.3	1
103.8	105.8	105.6	108.3	102.8	105.9	113.8	108	92.2	95	102.5	106	2434.3	2
96.4	98.2	93.7	93	95.5	92.1	103.4	106.4	94.3	97	105.9	96.5	2351.3	3
95.8	93.6	93.1	93.2	96.7	99.3	98	95.9	104.4	101.3	106.4	95.8	2337.9	4
94.7	94.4	91.9	91.3	93.5	105.9	105.6	92.3	97.3	98.3	106.7	94.6	2323.5	5
93.8	94.4	95.4	98.8	99	108.6	106.9	93.6	94	96.9	105	106.4	2383.7	6
103.9	97.7	99	97.7	102.1	106.3	107.6	95.5	104.3	104.9	91.1	95.2	2378.4	7
96.7	93.6	95.7	98.1	97.1	94.3	104.2	106.4	101	98.3	98.3	92.3	2340.5	1
92.8	91.4	98	95.6	96.9	91.1	105.4	103.3	94.8	98.7	93.7	92.5	2311.6	2
98.5	95.1	91.9	91.5	93.3	107.8	106.6	108.9	92.8	99.4	101.4	94	2356	3
93.8	95.2	93	92.8	93.7	93.1	109.1	103.9	97.3	99.7	107.1	97.8	2353.5	4
97.7	94.9	92.8	91.4	93.1	105.9	107.6	109.1	96.3	99.7	102.9	97.2	2350.8	5
101	98.4	98.1	97.5	96.8	97.9	106.2	96.8	93.3	96.9	107.2	96.6	2347.9	6
99.1	101.2	100.2	98.1	102	96.1	107.6	109.1	97.4	105.7	104.6	96	2389.8	7
99.7	97.8	98.5	100.4	94.4	95.3	105.1	106.7	94.5	100.4	92.7	93.6	2354	1
95.1	94.9	94.8	95.4	96.5	100.1	104.1	92.7	99.5	103.3	95.7	91.9	2343.2	2
102.5	98.9	98.7	101	100	97.4	108.7	109.4	95.6	98.8	101.4	91.5	2376.3	3
96.2	100.3	100.4	100.2	93	95.4	108.2	108	93.7	101.5	107.5	97.7	2373.6	4
94.2	94.9	93.3	100.2	100	95.6	104.8	96.2	94.1	98.1	105.6	97.1	2334	5
98.3	99.9	99	98.1	102.8	96.2	92.2	92.7	100.9	101.1	104.2	95.5	2347.4	6
103.6	103.9	102.8	100.3	97.2	95.1	104.7	92.1	98.6	101.2	104.3	93.7	2375	7
98.8	98	96.9	97	96.6	99.6	106.6	106.1	96.5	103.6	96.1	91.2	2375.6	1
100	101.4	99.6	101.6	101.1	97.5	108.7	105.1	99	100	98	94.1	2398.8	2
102.7	100.6	97.8	98.4	99.1	93.6	108.7	93.9	98.7	98.2	91.8	93.5	2356.5	3
102.4	102.2	100.7	99.5	99.2	93.7	104.2	93.7	97.7	103	97.4	92.2	2351.9	4
101	100	99.9	100	99.5	94.7	96.5	98.4	97.6	102.3	106.6	91.7	2395.8	5
100.8	104.1	102.9	101.7	99	100.1	97.7	96.9	101.7	101.2	92.6	91.9	2372.7	6
105.1	104.2	105.7	104.8	99.6	95.2	107.5	106.2	91.6	97.7	103.5	95.9	2409.9	7
95.4	94.4	100	100.5	94.1	106.4	105.4	108.7	96.6	98.3	98	92	2371.6	1
100.1	99.8	97.6	97.5	95.5	91.7	112	105.2	93.5	103.9	93.5	96.4	2353.9	2
97.8	97.4	94.6	93.8	93.5	109.2	108.7	104	93.5	99.5	101.9	94.8	2370	3
97.3	94.7	95.9	97.6	96.2	103.3	108	109	94.2	100	104.4	97.1	2343.7	4
95.7	95.6	95.5	96.3	97.1	97.2	104.1	96.8	95.6	99	103.2	94.9	2354.4	5
105.4	105.4	103	106.8	104.8	97	99.8	96.6	98.8	104.7	92.6	91.5	2400.5	6
105.4	105.4	103	106.8	104.8	97	99.8	96.6	98.8	104.7	92.6	91.5	2400.5	7
103.9	97.3	103.9	101.6	97.8	95.7	108.1	108.6	93.3	100.3	95.3	95.2	2381.8	1
96.3	97.5	98.3	98.4	95.8	93.1	110.3	108	106.6	105.8	95.6	93.1	2369.3	2
92.7	91.8	93.7	101.8	108.1	104.5	110.8	103.2	92.8	98	102.9	105.4	2340.1	3
94.3	92.5	94.1	108.7	108.7	106.4	110.1	105.8	94.1	99.3	102.1	91.6	2376	4
100.4	108.6	92.8	94.1	106.7	108	110.9	106.5	97.6	100.7	104.1	94.3	2395.7	5

13	14	15	16	17	18	19	20	21	22	23	24
37,100	37,233	37,272	37,261	37,136	37,156	38,445	38,743	36,986	36,184	37,161	35,472
365	365	365	365	365	365	365	365	365	365	365	365
									36,184	37,161	35,472
									365	365	365
37,100	37,233	37,272	37,261	37,136	10,428	10,680	10,707	10,324			
365	365	365	365	365	104	104	104	104			
					26,728	27,765	28,037	26,662			
					261	261	261	261			
0.00	0.00	0.00	0.00	0.00	0.00	0.00	0.00	0.00	0.00	0.00	0.00
0	0	0	0	0	0	0	0	0	0	0	0

2011 running cost
Is this a leap year? n

Month	Day		Year	1	2	3	4	5	6	7	8	9	10	11	12
1		1	2011	94.4	93.3	93.1	96.3	98.6	93.7	98.6	92.9	108.4	104.7	95.8	96
1		2	2011	95.1	97.1	95.5	96.2	96.4	97.3	98.5	95.8	103.7	101.3	94.9	97.4
1		3	2011	97.1	96.2	96.6	97.4	94.1	93.9	108.2	105.9	107.3	95.4	94	96.4
1		4	2011	101.2	96.4	93.6	97.9	95.9	100.2	93.1	109.2	104.2	101.8	99	98.7
1		5	2011	97.1	95.6	96.9	100.5	96.7	95.2	94.4	109.5	105.3	102.8	98.8	99.4
1		6	2011	98.5	95	101.2	97.8	94.4	93.1	105.9	108.1	102.1	96	95.7	96.3
1		7	2011	99.1	94.4	97.1	97.4	94.9	93.4	109.4	106.2	100.6	97.4	96	96.5
1		8	2011	97.2	93.7	97.4	101.2	95.5	99.3	97.7	94	105.7	106.9	104	105.5
1		9	2011	96.6	94	94.1	95.1	92.9	99	94.9	94.8	108.8	104.4	104.8	104.5
1		10	2011	93.5	97.6	97.9	93.2	96.1	100	106.9	107	102.3	99.8	98.6	100.4
1		11	2011	93.6	97.1	98.6	99	95.5	94.8	106.9	109.1	104.2	102.6	99.1	99.3
1		12	2011	95.2	97.1	93.8	93.6	97.7	96.6	93.7	103.3	109.6	105.6	103.6	105
1		13	2011	93.5	96.9	93	96.4	96.6	93.2	107.5	104.8	100.5	97.9	97.5	98.8
1		14	2011	99.9	94.4	95.8	94.9	101.2	97.7	93.8	107.3	106	95.3	93.7	95.5
1		15	2011	94.6	99.5	100.5	100	98	100.2	93.7	108.2	102.5	97.5	97.5	97.1
1		16	2011	92.8	98.7	100.5	101.2	99.8	94.4	93.3	109.1	107	101.3	96.3	96.7
1		17	2011	99	94.8	99.4	99.2	96	95.4	108.8	106.8	98.3	99.2	94.6	97.9
1		18	2011	93.8	98.1	101.2	101.1	97.9	95.8	108.1	103.1	98.5	93.5	97.8	94.3
1		19	2011	99.6	95.3	97.6	97.7	92.8	99.8	93.9	109.2	105.2	96.3	95.6	95.5
1		20	2011	101.1	92.9	95.6	96.5	95.7	99.2	104.3	107.3	102.5	96.8	94.4	96.8
1		21	2011	98.8	92.8	95.2	96.5	98.6	100	109.6	109.5	100.9	94.2	93.6	92.8
1		22	2011	99.6	96.4	100.8	99	96.2	100.8	94.6	97.8	106.8	102.3	100.9	101.1
1		23	2011	94.5	97.2	99	94	97.8	97.9	93.8	93	109.2	104.3	107.3	106.4
1		24	2011	99.6	96.2	97.4	96.9	93.4	93.2	95	104	105	95.1	94	94.8
1		25	2011	98.4	93.1	96.4	96.6	93.7	99	93.9	104.2	105	97.3	95.4	95.7
1		26	2011	100	95	97.3	96.7	94.4	94.2	95.6	105.1	106.5	96.5	94.6	94.9
1		27	2011	97.8	93.2	95.4	96.2	97	99.8	94.5	107.9	103.6	98.3	96.3	102.3
1		*28*	*2011*	*96.9*	*94.5*	*96.3*	*96.5*	*94.1*	*94*	*107.9*	*105.3*	*107.1*	*96.3*	*96.4*	*96.2*
1		29	2011	98.3	93.2	95.8	96.9	94.9	99.1	99	95.2	105	106.1	103.2	102.9
1		30	2011	99.6	94.6	97.3	96.7	96.8	101.1	109.3	100.7	100.3	94.6	100.7	105.6
1		31	2011	100	94.6	97.4	95.8	92.9	93.9	95.3	103.9	106.1	97.7	97.4	96.8
2		1	2011	100.7	96.3	93.2	93.3	101.1	100.1	94.3	109.1	104	104.3	102	101.8
2		2	2011	97.6	93.6	96.6	97	93.5	101	94.7	108.6	106.2	105.1	102.4	102.4
2		3	2011	97.1	95	97.1	97.3	94.1	101.2	96.1	92.9	108.6	107.3	104.3	105.1
2		4	2011	101.2	94.1	96.4	96.4	94.3	99.8	95.2	109.6	105	102.5	100	99.7
2		5	2011	94.9	99.8	95.5	95.1	93.5	95.5	94.4	98.3	104.3	106.5	104	102.2
2		6	2011	92.9	101.2	93.8	94.6	95.5	96.7	99.5	97.9	93.3	107.3	105.8	100.2
2		7	2011	93.1	97.7	93	93.7	98.8	98.6	93.5	108.4	107.3	96.9	95.4	95
2		8	2011	100.9	95.9	101.2	97.5	97.8	98	94.6	107	106.5	97.8	95.6	96.4
2		9	2011	93	96.3	98.8	93.8	101	98.4	92.9	106.4	103.7	101.4	98	94.7
2		10	2011	95.8	97.5	96.8	95.4	97.8	98.5	94.3	108.1	101.4	97.1	97.1	95.2
2		11	2011	93.4	97.6	93.6	94.1	93.3	100.4	96.1	97.3	104.2	99.5	98	97
2		12	2011	94	99.7	95.3	95.9	95.3	97.2	97.4	94.3	107	104.9	102.4	102.6
2		13	2011	94.4	93.4	95.9	97.1	96	101	100.3	97.7	107	103.9	108.8	108.6
2		14	2011	99.3	94.7	97.5	96.7	95.4	93.4	99.2	96	103.2	100	97.6	98
2		15	2011	101	94.7	97.8	97.6	95.4	95.4	98.9	93.2	102.7	98.9	99.6	97.6
2		16	2011	94.3	93.2	96.7	96.6	95.3	92.7	97.9	93.9	103.1	98.8	99.9	97.7
2		17	2011	96.2	95.4	95.1	96.8	94.7	96.1	94.5	93.5	103.3	97.8	96.3	98
2		18	2011	95.9	99.8	94.3	95.1	92.7	100.3	96.3	93.9	103	99.8	96.7	95.7
2		19	2011	93	97.8	93.6	94.8	94.4	97.1	96.3	99.3	108.4	101.7	102.7	100.4
2		20	2011	96.7	93.3	95.9	96.6	95.8	101.2	100.9	99	108.3	105.1	104	103.5
2		21	2011	96.4	93.7	96.6	97.4	96.3	96.4	94.7	93.7	107.3	103.9	100.4	101.6
2		22	2011	97.1	94	96.3	97.6	94.7	92.7	99.5	108.4	109.3	100.1	100	99.5
2		23	2011	94.3	98.3	94.9	95.4	93.3	101.2	96.8	93.6	105.1	98.2	97.4	98.1
2		24	2011	94.2	100.8	94.2	94.2	93.8	98.7	95.6	97.3	101.6	99	95.5	94.8
2		25	2011	93.4	101	94.1	94.4	93	99.5	94.5	101.2	101.2	98.1	95.4	94.6
2		26	2011	93.6	97.3	94.3	95.6	94.6	96.9	94.4	93	107.2	101.6	97.6	100.9
2		27	2011	93.7	97.3	94.5	95.4	94	96.5	98.4	95.9	93.6	108.8	102.5	100.4
2		28	2011	97.7	97.6	94.5	95	93.9	98.8	93.5	92.8	99.6	98.6	97.8	97.1
NA	NA		NA												
3		1	2011	101	95.1	96.1	93.9	94.9	92.8	93.6	93.9	104.3	100.6	100.3	100.5
3		2	2011	97.5	96.1	93.9	93.9	96.1	93.4	96.2	108.8	105.5	99.6	99.7	100.1
3		3	2011	96.9	95.8	97.5	93.7	96.6	100.4	97.3	95.1	109.3	101.7	99.7	98.1
3		4	2011	93.3	93.4	96.1	94.1	97.2	99.3	96.1	95.6	109	99.6	99.8	98.4
3		5	2011	93.4	95.4	95.8	97.3	94.9	94.2	93.2	98.8	106.1	101.6	101.3	102

2011 running cost
Is this a leap year? n

Month	Day	Year	1	2	3	4	5	6	7	8	9	10	11	12
3	6	2011	96.1	97.1	94.6	97.3	96.1	97.2	99.5	99.6	94.8	109.6	107.2	106.9
3	7	2011	95.7	93.3	96.8	93.8	94.6	99.7	93.7	106.7	103.2	97.5	98.9	98.4
3	8	2011	100	96.1	93.4	94.4	101.1	96.5	108.7	104.2	97.7	96.3	102.4	103.9
3	9	2011	94	99.8	95.2	96.9	95	93.1	92.9	108.8	98.7	98	96.8	96.7
3	10	2011	94.5	93	97.1	96.8	94.2	100	93.4	109.4	107.2	101.1	102.6	104.1
3	11	2011	94.3	97.1	91.1	90.2	96.5	93.3	96.1	94.9	106.8	104.2	101.9	101.9
3	12	2011	97.2	95	96.9	93.9	97.2	96.8	98.2	94.9	97.1	106.5	103.5	103
3	13	2011	93.7	96.1	34.7	17.3	91.3	94.5	94.6	95.8	108.8	109.5	108.4	108.5
3	14	2011	94.3	91	87.5	0.9	92.2	95	98.3	99.6	95.6	93.9	106.1	94.6
3	15	2011	95.7	91.7	87.5	35.3	93.8	94	97.1	98.9	94	106.4	97	105.5
3	16	2011	96.5	90.9	0.9	1	91.4	96.9	93.6	99.5	96.8	103.5	95.7	93.7
3	17	2011	95.2	94.5	87.8	88	93.9	94	99.1	99.1	93.9	105.5	105.1	105.5
3	18	2011	92.8	97.6	91.3	88.8	95.7	95	99.5	100.2	94.2	107	109.8	106.2
3	19	2011	96.9	93.6	96.5	93.8	96.8	101.1	98.4	94.2	96.2	105.5	105.5	105.5
3	20	2011	96.3	91.3	94.3	93.9	96.8	101.2	98.6	96.1	97	101	93	94.1
3	21	2011	98.6	94.2	91.6	93.7	96.1	93.8	94.1	109.4	106.1	98.4	98.7	99.3
3	22	2011	93.3	98.8	95.9	97.3	95	100.9	93	108.2	104.4	97.6	97.5	98.8
3	23	2011	101	96.5	93.4	94.6	101.2	99.2	100.3	107.6	103.1	96.6	95.6	93.9
3	24	2011	95.3	100.7	95.6	97.3	96.2	96.4	98.3	94.2	100.6	96.2	94.6	95
3	25	2011	96.3	94.2	97.6	96.1	94.8	98.5	93.2	107.9	102.7	97.2	94.6	94.8
3	26	2011	98.5	94.4	97.3	98.4	97.8	92.7	97	100.5	109.6	103.5	102.3	103.1
3	27	2011	96.7	95	97.7	93.9	97.8	101	100.9	97.8	94.9	104.6	108.9	103.7
3	28	2011	96.8	95.9	91.2	93.9	95.1	97.5	99.2	95.7	106.6	100.1	97.7	99.4
3	29	2011	93.4	93.2	97.7	95.6	96.9	98.7	96.9	109.3	102.2	96.9	98.5	96.9
3	30	2011	96.7	101	94.8	96.8	99.3	98.6	94.6	108	100.6	97.8	96.5	96.6
3	31	2011	94.5	100.9	94.9	97.1	98.4	98.2	108.5	106.2	102.2	99.9	98.9	97.3
4	1	2011	97.4	93.9	97.4	96.8	93.5	100.5	103.3	108.7	102.1	100.1	98.7	100.1
4	2	2011	93.1	95.5	97.4	97.4	95.4	92.9	99.3	96	106.1	102.2	103.1	104.4
4	3	2011	94.3	95.5	97.6	97.8	94.4	97.2	100	93.7	105.7	105.1	108.3	108.6
4	4	2011	94.5	99.3	99.5	99.2	93.3	93.7	109.3	99	94.8	108.3	110.5	109.7
4	5	2011	93.9	97	99.1	98.4	94.8	95.3	105.6	105.2	97.2	101.8	109.7	105.9
4	6	2011	95.1	97.1	99.2	97.8	102.4	94	104.5	99.7	108.4	110.6	108.4	111
4	7	2011	94.9	94.1	97	96.6	99.1	97.7	107.1	105.2	95.4	93.5	111.7	105.9
4	8	2011	99.7	93.7	97.1	96.1	98.3	94.7	104.8	97.1	106.6	106	106.7	108.6
4	9	2011	94.6	98.3	99.4	99.4	101.2	95.1	105	101.2	95.9	93.3	93.6	93.5
4	10	2011	94.7	100.1	94.6	94.3	109.5	96.7	104.6	103.4	93.9	106.2	105.8	106.4
4	11	2011	97.8	92.8	93.2	94.3	98.4	96.6	106.2	104.2	95.5	93.7	105.8	110.9
4	12	2011	95.8	99.4	94.3	92.8	98.3	94.7	96.7	106.8	94.6	93.7	93.7	93.1
4	13	2011	96.2	99.9	93.8	93.3	98.8	96.9	93.8	106.8	100.5	95.1	94.7	92.9
4	14	2011	96.6	99.9	94.2	94.8	100.4	98.8	94.4	101.7	100.5	92.9	108.6	110.6
4	15	2011	94.1	97.8	94.8	93.3	98.5	98.2	93.1	105.9	99.3	93.6	93.7	93.7
4	16	2011	98.3	97.7	92.8	93.5	100.4	95.6	96.9	95.1	103.3	98.1	95.4	95.6
4	17	2011	93	98.2	92.7	93.2	100.2	95	95.8	94.3	108.7	105.4	101.4	99.9
4	18	2011	96.6	98.8	93.7	93	97	96.8	95.5	107.1	100.9	95.8	94.7	92.8
4	19	2011	97.1	93.3	94.9	94.9	96.2	99.6	108.1	104.7	99.9	95.9	93.4	96.7
4	20	2011	99.8	93.2	95.2	94.7	98.2	100.1	96.7	93	103.2	97.3	95.6	93.9
4	21	2011	97.8	92.9	94.6	95.1	97.1	100.3	96.6	104.5	105.3	97.6	93.5	94.8
4	22	2011	96.2	100	93.8	94.8	100.1	99.1	107.5	103.8	104.5	95.9	97.5	96.2
4	23	2011	95.4	93.3	95.2	94.9	92.9	96.8	95.8	95.2	93.3	106.5	102.6	102.6
4	24	2011	97	93.3	95.9	96	94	97.8	98.8	99.7	93.1	107.5	101.3	99.9
4	25	2011	98.4	93.8	96.4	94.9	99.8	99.5	95.1	104.5	106.4	97.9	95	96
4	26	2011	98.8	94.8	97.2	95.8	99.5	99.2	107.5	103.7	105.4	96.5	95.6	96.4
4	27	2011	99.4	93.8	95.4	94.3	100	99	96.9	92.9	105.6	96.5	94.9	102
4	28	2011	93.9	99.3	93.3	94.4	99.3	98.9	106.9	109.2	102	96.5	96.6	97.8
4	29	2011	96.2	93.2	95.6	95.9	96.1	100.3	97.2	93.4	103.6	103.1	102.6	99.5
4	30	2011	93.9	100.6	95.4	95	93.8	94.7	95.7	96.5	109.5	105.5	103.3	103.1
5	1	2011	97.6	93.5	95.7	97.5	96.9	93.1	95	94.4	105.4	102.9	98	96.3
5	2	2011	99.2	93.9	95.8	97.1	95.3	95.6	106.2	101.9	96.1	93.6	110.3	107.8
5	3	2011	97	96.5	94.6	95.6	93.2	93.2	103.3	101.2	95.2	109.6	106	106.3
5	4	2011	95.7	99.6	93	94	100.1	108.2	108.3	100.3	95.1	105.9	111	107.1
5	5	2011	95.4	98.8	99.6	93	99.6	108.9	108.3	107	94	106.4	111.6	107.8
5	6	2011	93.1	97.7	99.8	96.5	99.2	109.4	109.1	104.4	102.7	110.5	107.8	110.1
5	7	2011	94	96.8	99.6	98.8	100	95.2	95.1	107.9	100	94.2	104.7	97.9
5	8	2011	92.9	97.8	94.4	94.1	98.4	96.1	101.2	99.9	105.6	108	105.2	109.5
5	9	2011	94	96.8	98.8	93.8	101.2	99.7	96.5	107.7	106.4	98.7	94.4	95.1

2011 running cost
Is this a leap year? n

Month	Day	Year	1	2	3	4	5	6	7	8	9	10	11	12
5	10	2011	95.5	98.8	94.3	94.5	96.8	100.4	104.6	108.7	106.5	98.8	97.2	97.2
5	11	2011	96.3	99.8	93.4	95	93.3	96.8	93.9	109.4	108.6	100.4	96.7	94.5
5	12	2011	93.4	96.9	96.8	93	99.3	100.6	100.3	94.6	104.3	98.6	97.2	96.4
5	13	2011	94	96.5	101.2	98.4	97	98.8	99.3	108.7	107.8	98.9	97.2	96.8
5	14	2011	98.5	96.7	95.9	94.8	96.4	101.1	95.3	93.9	93.9	109.5	104.1	102.5
5	15	2011	95.6	96.9	100.9	93.8	101.2	93.2	99.5	98.8	93.1	95.1	94.4	106.3
5	16	2011	95.5	97.1	92.9	92.3	94.5	96.4	97.9	98.2	106.4	108.7	109	109.1
5	17	2011	93.8	97.9	93.6	94.2	98.6	99.8	98.4	98.1	93.8	106	108.9	110
5	18	2011	94.4	96.7	99	92.1	97.5	98.9	96.5	96.7	106.3	109.7	110.7	108.7
5	19	2011	97.7	94.7	97.1	98.9	96.8	99.1	97.6	96.1	98.2	106.1	108.6	105.4
5	20	2011	96	98.8	92.8	92.2	92.8	100.8	97.9	97.1	106.9	106.1	108.9	106.6
5	21	2011	92.8	96.3	99	92.8	92.9	93.8	97.2	98.3	97.3	94.5	98.2	107.2
5	22	2011	96.9	96	101.2	92.9	100.3	95.7	99.1	99.9	95.3	106.6	105.2	105
5	23	2011	93.4	97.2	100.9	98.8	97.5	100	97.6	108.5	106.1	96.7	93.6	103.4
5	24	2011	96.1	95.8	97.7	97.7	97.1	97.6	97.6	109.6	107.1	96.5	93.8	95.3
5	25	2011	93.3	96.3	98.8	96.8	97.1	98.9	98.4	93.7	102.1	98.5	95.4	95.2
5	26	2011	93.3	97.2	101.2	93.8	101.2	99.5	98.5	98	101.4	98.2	94.4	93.4
5	27	2011	98.8	95.7	97.4	97.1	97.1	100	99.6	107.7	104.4	103.9	97	95.3
5	28	2011	99.2	95.4	97.8	93.8	100.9	92.9	94.7	94.1	95.7	105.5	105	99.9
5	29	2011	100.3	94	97.3	93.8	99.8	96.8	100.4	93.6	96.3	92.7	105.8	107.1
5	30	2011	93	96.9	99.8	93.1	98.8	96	98.2	99.3	93.4	109.2	109	104.3
5	31	2011	94.3	94.4	97.3	94.8	97.7	100.3	98.8	108.8	100.4	97.5	93.9	93.2
6	1	2011	101.2	97.9	93.2	93.7	99.6	108.5	106.5	100	93.1	107.8	106.5	108.9
6	2	2011	92.9	98.1	100.9	92.9	100	108.9	107.8	101.4	93.5	107.7	108.5	109.9
6	3	2011	92.9	98.4	101.2	98.9	98.7	95.2	104.9	98.9	100.3	107.9	111.3	109
6	4	2011	95.8	95.6	99.8	100.8	99.8	95.4	93.7	106.7	96.3	107.5	110.9	110.9
6	5	2011	106.4	96.9	101.1	93.5	98.5	96.2	107.7	104.9	104.5	94.3	94.2	101.5
6	6	2011	94	99.6	96.2	93.4	101	109.3	108.1	98.9	92.9	108.7	109.4	110.9
6	7	2011	93.9	100	93.2	92.8	99.9	109.6	109.1	97.1	106.7	109	111.1	110
6	8	2011	94.6	101	95	94.3	99.4	93.9	105.7	99.7	98.4	107.9	108.6	112.3
6	9	2011	93.6	98.4	93.5	93.2	93.5	93.1	103.6	98	93.4	110.4	109.4	112.7
6	10	2011	92.8	98.7	93.9	92.9	100.9	93.2	108.9	101.4	96	105.3	105.6	109.4
6	11	2011	106.9	98.4	98.9	93	99.4	95.2	107.2	107	97.7	93.9	93	95
6	12	2011	94.8	100.8	94.1	94.7	93	97.6	109.3	105	100.7	97.2	93.5	102.6
6	13	2011	94.7	99.6	93.3	95.6	94	97.5	104.5	103.9	94.2	110.4	109	109.5
6	14	2011	100.2	96.2	93.5	93.8	101.2	97	93.8	93.3	103.6	100.5	96.6	93.7
6	15	2011	96.3	98.1	93	93.9	99.2	109.3	107.4	103.4	97.4	108.7	110.4	109.7
6	16	2011	108.8	97.2	98.9	93.2	101.1	107.8	104.6	105.4	94.9	108.2	107.3	107.4
6	17	2011	109.5	96.7	99.9	101	98.9	107.9	109.2	101.9	98.2	108	107.3	109.3
6	18	2011	109.1	97.2	100.8	95.6	101.1	93.3	94.5	108.7	99.3	93.9	106.4	108.7
6	19	2011	106.8	97.7	97.7	93.2	94.5	95.9	93.9	105.8	101.5	95.2	94.1	108.7
6	20	2011	103.2	108.2	104	105.5	109	107.3	98.5	93.7	110	114.2	112.9	117
6	21	2011	103.7	109.4	104.5	105.6	103.5	101.9	92.8	105.5	110.1	111.8	114.7	113.2
6	22	2011	105.4	108.6	105.3	107.3	103.3	102.4	96.7	110.1	110	113.1	113.3	112.4
6	23	2011	103.2	108.8	104.2	105.3	108.9	100	94	106.7	110	112.9	112.4	112.4
6	24	2011	103.7	108	104.6	104.6	109.2	100.4	95.7	105.6	105.3	114.8	115	115.4
6	25	2011	100.3	106.4	105.9	104.3	103.4	104.8	102.7	94.7	111.3	111.1	114	111.8
6	26	2011	100.9	107.6	104.1	105.3	103.8	106.1	105.2	96.1	111.3	108.4	112.7	111.1
6	27	2011	94.4	98.7	94.4	93	99.5	105.5	109.3	103.6	94	105.3	110.5	109.1
6	28	2011	94.3	97.6	93.9	95.5	96.1	100.2	93.4	93.1	101.7	99.2	96.7	95
6	29	2011	100.6	97.7	93.2	93.7	101.2	98.2	98.6	93.4	100.3	97.3	96.1	93.8
6	30	2011	99.5	96.1	101.2	92.7	97.8	97.6	97.2	108.8	106.3	96.1	95.5	93.8
7	1	2011	94.3	97.8	97.6	95.4	96.8	94.6	100	94.4	106.6	96.9	93.9	94.8
7	2	2011	93	97.2	100.9	94.8	96.8	95.9	101.2	99.4	107.5	107.8	105	102.2
7	3	2011	94.1	97.2	94.1	93.3	94.3	97.5	94.3	93.9	93.7	107.1	108.3	107.4
7	4	2011	93.9	96.8	93.9	93.3	92.7	97.1	94.2	93.5	94.3	107.7	99.9	101.6
7	5	2011	93.7	97	93.7	101	97.7	93	98.2	109.4	103.9	93.5	94.6	110
7	6	2011	96.8	96.2	96.8	100.3	97.7	98.8	98.4	108.7	102.1	94	94.4	93.9
7	7	2011	98.4	96.4	98.4	96.8	96.3	101.2	99.1	109.1	105.3	95.3	94.5	103.7
7	8	2011	92.8	96.5	92.8	101.2	97.1	94.8	100.2	93.5	107.5	95.9	94.7	94.1
7	9	2011	101.2	95.5	101.2	97.7	97	94.2	100	94.7	109.3	101.9	99.9	98.2
7	10	2011	93	96.8	93	98.8	100.9	96.7	92.7	99.7	108.8	104.8	104.3	101.7
7	11	2011	94.1	97.1	94.1	95.5	101	93	95.2	103.4	106.5	96.4	94.5	94.3
7	12	2011	92.9	96.6	92.9	101.1	97.4	96.8	99	108	105.4	98	97.2	94.9
7	13	2011	93	96.4	93	96.8	97.4	98.3	99.8	94.7	106.5	96.4	95.9	94.1

2011 running cost
Is this a leap year? n

Month	Day	Year	1	2	3	4	5	6	7	8	9	10	11	12
7	14	2011	93.3	96.7	93.3	101	97.3	98.3	99	96.9	106.3	96	94.9	94.1
7	15	2011	98.3	95.7	98.3	97.8	96.4	100.4	99.7	96.9	108.3	100.2	96.5	96.2
7	16	2011	93.8	96.2	93.8	99.8	97.4	95.2	100.2	95.7	102.2	103.2	97.3	98.5
7	17	2011	93	96.8	93	99.8	101.1	95.8	94.3	97.5	106.6	105.7	104.5	102.7
7	18	2011	93.2	97.5	93.2	100.9	97.4	96.9	100.4	106.7	105.3	95.8	93.2	94.2
7	19	2011	101.1	95.8	101.1	101	96.6	101.2	100.2	106.2	106.6	97	105.2	93
7	20	2011	93	96.6	93	100.9	97.1	99.8	99.7	93	108.4	99.9	98	95.3
7	21	2011	93.5	97.4	93.5	96.8	97.6	93.4	100.4	94.6	105.4	97.5	98.2	96.5
7	22	2011	93.7	97.7	93.7	93	97.1	93.2	99.8	92.8	108.5	98.3	93.8	93.4
7	23	2011	98.4	96.8	98.4	95.4	101.2	96.1	98.9	97.2	98.2	103.2	97.2	99.5
7	24	2011	101.2	95.7	101.2	99.8	101.2	95.6	101.2	99.6	108.6	109.6	101.4	99.8
7	25	2011	100.1	95.9	100.1	96.8	96.8	99.3	98	94.7	101.7	94.4	110.1	111.5
7	26	2011	99.1	93.8	99.1	96.3	95	98.2	94.6	95.2	101.7	93.9	107.5	107.3
7	27	2011	99.3	95.9	99.3	96.8	96.8	96.8	98.9	109.3	104	95.9	94.8	106
7	28	2011	98.3	95.9	98.3	101.1	96.8	101.2	98.7	93.8	104.5	94.5	94.1	102.4
7	29	2011	100.3	94.7	100.3	97.2	95.5	99.7	97.2	107	104.3	94.8	93.9	94
7	30	2011	100.3	95.9	100.3	100.2	101	94.8	99.8	95	92.9	102.5	99.2	96.8
7	31	2011	93	95.7	93	101.1	101.1	95.8	94.3	100.5	108.7	109	101.1	99.8
8	1	2011	95.4	100.9	99.8	93.1	99.9	94.2	98.6	109	99.5	104.9	109	111.7
8	2	2011	94.6	99.2	101.1	100.7	99.2	93.4	97.9	109.1	98	105.7	106.4	108.7
8	3	2011	94.4	99.5	98.4	96.1	99.3	98.2	96.2	109.5	99.4	95.1	105.9	111.6
8	4	2011	96.2	101.1	92.7	93.2	100.3	93.9	98.8	93.1	100.3	93.9	101.9	105.2
8	5	2011	97.3	97.6	93.7	94.5	98.4	94.3	104.6	101.8	100.4	94	107	95.6
8	6	2011	93.2	99.3	100.7	93.4	98.4	98	94.3	98.1	103.6	98.6	94.4	93.7
8	7	2011	93.8	98.8	101.2	96.1	101.1	97.8	93.4	105.4	105.6	99.9	97.9	96.4
8	8	2011	93	98.8	100.7	100.2	99.2	99	95.7	103.5	98.3	105.8	109.5	110
8	9	2011	93.3	98.8	101.2	101.2	98.4	100.4	94.7	104.3	96.7	108.9	109	112.3
8	10	2011	95.2	98.3	101	98.3	99.9	93.3	97.7	108.1	98.5	108.4	109	109.9
8	11	2011	99.9	96.4	98.6	100	98.3	99.1	95	104.3	97.5	108.4	111.2	111.6
8	12	2011	93.9	99.7	99.7	93.4	99.3	96.8	94.7	109	99.5	100.3	107.8	105.3
8	13	2011	93.5	99.6	98.3	93.7	92.9	98.2	93.7	104.1	103.7	98	94.4	95.1
8	14	2011	95.2	101.2	95.4	94.3	93.1	100.9	96.3	93.5	109.5	101.3	97.8	98.3
8	15	2011	96.4	100.9	93.8	93.1	99.6	94.2	97.4	108.8	98.1	93.2	111.2	106.8
8	16	2011	93	99.7	99.5	96.1	98.9	93.5	98.6	108.7	99.3	110.3	105.8	111.3
8	17	2011	96.1	98.4	93	94.7	99.3	95	99.2	97.7	100.5	98.9	110.4	107.1
8	18	2011	95.2	99.7	93.8	93.1	100.3	101.2	98	108.8	98.3	106.3	111.1	109.1
8	19	2011	94.3	100.3	94.3	93.2	100.3	94.6	94.2	95.8	101.2	95.8	96.6	107
8	20	2011	98.8	97	99.6	100.3	100.6	96.6	100	95.4	106.7	97.6	94.6	93.4
8	21	2011	96	99.3	94.2	95.9	94.9	93	98.6	99	93.1	105.1	100.1	97.4
8	22	2011	98.2	93.5	95.4	96.3	93.6	97.8	95	95.7	99.6	97.8	109.2	109.2
8	23	2011	97	95.5	93.7	94.2	98.9	95.2	99	95.5	100.6	96.1	104.8	103.2
8	24	2011	98.8	93.1	93.9	94.7	98.9	94.2	93	100.4	105.3	93.5	93.4	105.7
8	25	2011	96.7	101.2	94.9	93.1	100	97.4	93.6	109.1	105.9	95	93.4	107.7
8	26	2011	95.9	100.8	98.9	93.3	101.2	96.6	103.4	106.7	101.2	93.5	107.1	107.5
8	27	2011	92.9	98.3	101.2	96.1	101	98.7	98.2	96.7	108	99.4	96	92.9
8	28	2011	96	101.2	93.8	95.8	94.3	101.2	96.8	96.3	108.7	104.1	102	99.1
8	29	2011	98.4	92.9	94.5	95	96.8	94.2	93.7	108.8	102.6	93.1	109.9	108.6
8	30	2011	94	100.3	93.4	93.2	100.3	93.9	92.9	106.9	100.7	98.9	107.9	110.7
8	31	2011	94.2	99.9	93.8	92.8	100.9	95.8	99.2	107.2	102.7	94.6	107.8	105.9
9	1	2011	94	96.3	98.7	99.4	98.8	97.7	107.8	104.8	96.1	106.6	111	109.2
9	2	2011	93.4	99	100.1	92.7	98	101.4	109.6	106.8	96.9	107.5	106.8	108.7
9	3	2011	99	96.7	98.8	99.8	99.2	94.1	96.6	93.9	102	96.3	95.8	109.4
9	4	2011	102.8	95.8	99	100.4	99.2	96.6	98.7	109.6	106.8	101	96.2	93.7
9	5	2011	99.2	95.7	98.1	99.3	98.6	94.4	96.5	94.8	101.3	94.5	92.9	95
9	6	2011	93	96.7	98	99.5	97.5	97.7	109.6	104.8	95.3	110.6	106.3	107.2
9	7	2011	95.5	99.1	99.6	95.7	99.9	105.5	99.2	106.8	97.2	105.1	110	108.7
9	8	2011	95.1	98.5	100.4	92.8	99.2	99.2	109.1	108	97	105.8	106.2	109.2
9	9	2011	94.8	97.6	99.9	95.7	99.2	97.9	109.5	106.3	98.8	97	111.5	105.6
9	10	2011	98.7	95.6	97.7	98.9	97.7	93.9	96.3	98.1	107.4	94.2	105.2	107.5
9	11	2011	99.5	96.1	99	98	96.8	96.4	101.4	103.3	107.9	101.5	96.9	95.9
9	12	2011	94.9	98.7	99.8	100.3	98.2	98.8	109.5	104.2	95.2	105.2	110.9	109.8
9	13	2011	94.8	98.8	99.6	92.8	98.9	98.7	108	106.1	96.1	108.9	106.8	106
9	14	2011	98.6	96.9	98.2	99.1	96.5	97.5	104.9	105.7	97.7	93	110.8	111.7
9	15	2011	94	98.9	99.2	96.4	97.2	98.5	108.8	105.1	95.7	95.9	110.1	111.3
9	16	2011	94.8	98.5	99.5	100.3	99.3	98	108.4	103.5	94.1	110	110.7	108.7

2011 running cost
Is this a leap year? n

Month	Day	Year	1	2	3	4	5	6	7	8	9	10	11	12
9	17	2011	93.4	97.7	99.6	92.9	100.3	95.9	96.3	94.2	102.5	97.3	95.7	95
9	18	2011	97.1	97.2	93.7	95	94	99.3	94.5	94.9	105.3	100.4	99.7	96.2
9	19	2011	94.1	94.8	95.5	96.8	96.7	96.8	108.2	105.5	102.3	92.9	108.2	111.5
9	20	2011	99.7	93	94.3	95.4	93.2	95.9	97.1	94.9	103.6	97.8	94.2	95
9	21	2011	99.4	93.1	94.1	95	93	94.6	96.7	92.9	102.2	97.4	93.4	93.3
9	22	2011	98.1	101.1	93.1	94.8	93	94	93	93.7	102.1	97.6	95.4	95.1
9	23	2011	95.8	99.9	101.2	97.6	100.1	99.7	100.5	107.2	104.7	93.9	107.4	107.5
9	24	2011	95.1	100.4	100.3	92.8	96.1	98	100.5	96.1	108.5	102.1	97.4	95.4
9	25	2011	93.4	98.1	100.3	93	92.7	98.1	93.3	99.4	108.2	99.8	99.8	97
9	26	2011	95.2	98.3	101.2	94.8	100.3	93.4	93.4	105.7	105.4	97.1	93.5	94.7
9	27	2011	99.1	93	93.8	95	94.8	95	97.6	95.8	103.6	99.3	94.9	96.2
9	28	2011	100.2	93.7	95	95.5	92.8	95.6	96.9	95.1	108.9	105.3	97.5	95
9	29	2011	101.2	93.1	95	93.4	94.1	95.3	97.3	94.5	104	98.9	95.8	94.7
9	30	2011	99.6	95.4	94.3	94.7	94.3	95.9	98.5	93.5	102.8	98.4	95.4	95.2
10	1	2011	95.2	98.8	100.1	99.8	100.9	96	99.6	95.7	109.2	99.1	95.4	93.5
10	2	2011	94.2	98.5	101	94.3	93.8	97.1	93.2	93.4	109.4	103.9	101.7	100.9
10	3	2011	95.7	99.1	100.1	100.7	100	92.8	93.8	109.5	100.4	95	95.2	108.8
10	4	2011	97.7	100.4	100.3	98.9	100	93	97.8	93.4	100.9	98.2	95.1	94.9
10	5	2011	96.9	101.2	98.9	94.3	100.3	92.8	94.4	109.4	101	96.2	95.3	96.2
10	6	2011	96.3	100.1	101.2	98.4	99.8	93.1	93.1	109.3	105.6	96	94.2	93.8
10	7	2011	99.6	95.5	98.7	101.1	98.8	93	99.3	108.1	98.6	98.5	107.5	94.6
10	8	2011	96.3	99.6	100.7	94.3	96.1	97.1	95.8	107.2	108.3	104.1	102.3	101
10	9	2011	97.4	100.4	93.4	93.8	95.5	100	94.9	94.6	109.5	106.1	100.8	107
10	10	2011	98.2	100.5	101	93.4	101.2	95.3	99.2	107.8	104.2	95	93.4	105.6
10	11	2011	95.8	101.1	100.9	100.9	100.1	94.7	108.5	104.3	99.3	94.4	93	94.9
10	12	2011	97.7	100.7	100.4	93.8	99.7	92.9	107.1	108.3	100.7	96.2	94.8	94.6
10	13	2011	100	101.2	95.4	92.9	101.2	94.9	93.7	101.3	101.4	97.9	94.5	95.1
10	14	2011	97.7	101.1	96.1	93.8	96.8	94.1	94.5	102.7	102.2	96.3	94.8	94
10	15	2011	97.4	100.2	93.4	95	94.4	101.1	95.3	94.6	93.1	104.6	100.7	105.4
10	16	2011	97.7	101.1	93.4	93.7	92.9	100	94.2	94.4	93.1	109.4	100	101.1
10	17	2011	95.5	99.3	100.4	98.4	99.6	99.1	107.7	101.6	100.3	93.7	106.6	109
10	18	2011	97	101	98.4	93.4	99.8	93	93.8	109.4	107.3	95.5	98.7	94.1
10	19	2011	97.6	100.8	100.3	97.6	99.9	99.2	108.8	105.8	103.2	93.8	92.9	109.8
10	20	2011	97.1	99.8	101.1	94.3	99.3	93.1	107.6	108.1	103.1	95.2	110.8	110.5
10	21	2011	93.6	97.3	101	96.8	100	99.8	109	106.2	104	94.2	95	93.5
10	22	2011	94	98.6	99.8	100.7	100.8	95.7	96.1	93.9	103.8	104.8	99.8	96.3
10	23	2011	97.5	100.3	97.6	93.2	92.9	98.9	100.2	93	94.2	108.7	104.2	103
10	24	2011	100.9	94.8	95.2	95.6	93.6	95.2	93.4	108.3	100.2	97.7	93.7	92.8
10	25	2011	99.6	95.4	93.1	93.6	96.1	93.9	93.4	109.6	99.5	96.2	93.7	94
10	26	2011	99.8	96.8	92.7	94.3	94.8	93.2	96.7	108.7	101.1	97.4	94.3	92.8
10	27	2011	99.7	93.4	93.7	94.4	92.9	94.8	97.1	93.6	103.1	98.5	97.7	94
10	28	2011	97.9	100.9	96.1	93.4	100.7	93.9	92.8	108.2	100.6	96.7	95.3	95.6
10	29	2011	100.2	96.6	99.3	99.8	99.8	98.9	95	98.2	109.6	103.3	99.5	100.3
10	30	2011	94.7	99.1	95.4	93.8	94.5	100.7	97.9	96.3	101	105.9	104.2	101.7
10	31	2011	93.7	99.7	101	93.8	101.2	94.2	98.5	108.1	104.7	95.4	95	109.5
11	1	2011	98.1	95.2	99.6	98.3	99.7	100	109.5	105.8	106.8	96	96.3	93.7
11	2	2011	92.8	99.3	93.4	95.4	93.1	98.3	109.5	109.5	102.4	99.5	96.6	94.3
11	3	2011	99.4	95.1	97.4	101.2	96	95.2	100.6	106	103.7	100.4	96.7	97.6
11	4	2011	99.7	95	101.1	99.8	96.6	94.6	109.5	109.2	101.9	98.3	96.2	95.9
11	5	2011	96.3	92.8	96.5	98.8	97.5	99.9	99.6	98.7	107	101.5	105.9	105.4
11	6	2011	98	94.6	101	93	96.8	93	95.3	93.3	96.6	108.1	104	100.8
11	7	2011	93.1	96.8	96.8	93.6	97.8	95.8	94.4	109	103.8	100.7	96.6	97.4
11	8	2011	99.8	94.9	96.9	101.2	95.7	92.9	109.6	107.3	101.4	96.9	96	96.3
11	9	2011	99.5	93.6	97	97.1	96	93.7	109.2	106	100.4	97.9	97.7	96.2
11	10	2011	99.4	93.7	96.5	97.4	96.5	94	98.5	93.1	108.1	104.7	98.6	97.8
11	11	2011	99.8	96.4	92.8	93.8	96.1	100.1	97.7	93.8	101.9	107.1	102.3	101.7
11	12	2011	100.8	96.2	98.8	93.8	93.1	93.8	95.4	93.5	109.2	105.6	103	100.9
11	13	2011	101	96.3	99.8	93.2	92.8	94	95.6	96.4	107.1	103.9	105.3	103.5
11	14	2011	96.8	97.5	93.7	95.1	92.7	98.2	99.4	107.2	107.5	102.4	105.4	101
11	15	2011	99.6	93.9	96.5	101.2	95.4	93.6	94.5	106.3	106.8	95.9	96.3	94.7
11	16	2011	96.1	95.9	101	96.1	97.6	95.4	94.5	107.9	104.4	99.6	100.5	95.9
11	17	2011	98.8	96.3	92.9	94.5	97.7	95.8	93.2	93.3	105.4	104.9	100.3	98.2
11	18	2011	97.5	97.3	99.8	94.8	99.3	96.5	94.5	92.9	105.2	105.4	101.8	101.9
11	19	2011	100	96.2	98.8	93.6	93	93.3	98.1	93.4	108.7	105.7	106.3	104.9
11	20	2011	93.6	99.6	95.4	100.7	95.2	99.3	95.6	96.3	93.3	104.1	106.8	104.8

2011 running cost
Is this a leap year? n

Month	Day	Year	1	2	3	4	5	6	7	8	9	10	11	12
11	21	2011	101	96.4	99.8	93.5	97.8	94.9	109	108.5	104.3	96.9	94.6	95.7
11	22	2011	95.6	100.2	92.8	94.4	95.5	99	93	107.9	96.6	93.8	100.4	95.1
11	23	2011	93.9	100	93.5	94.1	101.1	98.3	93.9	108.4	102.3	96.1	93.7	94.5
11	24	2011	94.4	96.1	97.2	97.1	95.3	97.4	95	107.4	107.2	97.6	95	96.4
11	25	2011	101	96.5	101	99.3	96.5	101.2	95.8	95.1	103.3	103.9	98.7	96.9
11	26	2011	95.6	98.8	96.5	98.4	97.5	96.8	100.5	99.3	106.8	100.3	102.3	101.1
11	27	2011	97.5	99.8	93.4	97	93.9	97.8	99.8	94.2	95.2	105.5	106.2	104.8
11	28	2011	99.6	97.2	99.8	95.1	101.2	97.2	94.7	104.6	106.6	100.4	99.1	96.5
11	29	2011	99.1	94.1	101.2	92.9	101.2	94.9	93.3	109.4	102.9	99.3	96.3	96.7
11	30	2011	93.7	96.9	93.4	94.5	97.6	99	94.9	109.2	107.6	106.8	101.5	98.5
12	1	2011	94.3	97.3	96.8	96.8	97.2	98.6	96.5	93.2	106.4	107.1	101.1	98.1
12	2	2011	93.8	97.5	100.3	101.2	95.7	97.4	96.2	93.5	104.6	100.7	103.3	99.3
12	3	2011	94.8	95.8	101.2	97.3	96.4	93	95.2	99.5	93.5	104	107.7	102.3
12	4	2011	98.8	95.3	97	101.2	97.3	93.8	97.9	100.3	104.9	106.1	107.3	108.7
12	5	2011	96.8	98.4	96.1	97.6	94.3	98.8	109.6	108.2	101.1	103.5	101.5	101.1
12	6	2011	93.7	97.6	100.9	99.8	96.2	97	97	109.6	103.5	103.1	106.5	104.6
12	7	2011	96.4	100.3	94	93.2	97.7	100.4	98.4	96.1	103.7	105.7	109.6	107.3
12	8	2011	95	101	93.1	93	97.6	98.4	94.1	96.5	102.5	103.6	101.3	100.1
12	9	2011	95.2	97.7	95.5	101.2	95.7	97.9	95.1	107	97.1	107.3	107.4	105.6
12	10	2011	93.6	97.1	101.2	100.3	97.2	97.6	95.2	97.2	95	102.5	109.2	108
12	11	2011	94.7	97.3	95.5	93	99.3	95.5	99.7	94.3	93.3	108.7	105.4	105.7
12	12	2011	96.1	99.8	93.1	93.4	97.8	98.9	98	108.8	105.4	100.3	99.7	101.7
12	13	2011	95.2	96.8	93	96.1	96.7	98.8	99.3	92.9	107.2	107.4	106.2	103.6
12	14	2011	97	94.8	94	93.7	101.1	94.8	101.7	94	108.1	108.9	109.2	105.4
12	15	2011	97.6	93.7	93.5	93.5	101.1	98.8	94.7	95.9	92.7	108.8	108.7	104.7
12	16	2011	96	101.1	93.3	93.2	101.2	100.9	104.6	98.3	108.5	109.5	106.3	104.7
12	17	2011	95.8	100.9	93.3	93.3	97.1	93.9	95.2	98.9	108.7	108.4	104.9	105.1
12	18	2011	94	101.2	92.8	92.7	101.2	93.7	99.1	93.4	93.7	108.2	106.3	109.3
12	19	2011	92.9	97.3	99.3	98.4	97.2	98.3	93.2	94.4	103.8	100.5	105.1	105.4
12	20	2011	94.2	97.6	93.4	92.8	101.2	99.5	94.1	93.4	106	103.2	101.2	104
12	21	2011	94.9	101.2	92.7	95.4	97.3	99.4	105.6	99.2	103.7	105.5	103.8	102.7
12	22	2011	95	95.6	97.7	101	96.7	99.6	96.7	93.6	108.5	101.5	97.3	97.7
12	23	2011	93.5	95.4	97.3	97.6	101.2	92.8	92.8	109.1	104	102.1	107.1	106.2
12	24	2011	93	97.3	96.1	97.6	101	94.5	98.1	99.7	108.5	106.9	108.2	109.1
12	25	2011	99.3	97.4	93.4	93.4	96.1	96.4	101.2	96.9	97.2	109.2	107.7	95.7
12	26	2011	95.3	100.9	93	93	97.6	94	97.9	92.7	109.5	108.9	106.3	104.7
12	27	2011	93.3	96.9	101	97.1	95.9	100.2	97.5	97	108.9	103.1	98.6	98.9
12	28	2011	100.4	94.6	97.3	97.6	95	97.9	95.6	93.8	108.8	101	96.2	96.7
12	29	2011	94.7	101.2	95.8	96.9	94.3	93.5	100.3	94.3	101.7	101.6	101.3	95.7
12	30	2011	100.4	98	93.4	93.9	93.8	93.8	98	95.3	107.1	102.1	96.7	96.5
12	31	2011	100.3	94.4	94.3	97	94.9	98.1	100.4	96.2	107.6	102.9	101.7	102.7

Based on Hour Ending	1	2	3	4	5	6	7	8	9	10	11	12
Total $ by Hour	35,267	35,481	35,150	34,758	35,550	35,534	36,110	36,928	37,427	36,942	36,934	36,969
Total Obs by Hour	365	365	365	365	365	365	365	365	365	365	365	365
Off Peak Hrs ($)	35,267	35,481	35,150	34,758	35,550	35,534	36,110					
Total Off Peak Obs by I	365	365	365	365	365	365	365					
Mid Peak Hrs ($)								36,928	37,427	36,942	36,934	36,969
Mid Peak Obs by Hour								365	365	365	365	365
Priority Peak Hrs ($)												
Priority Peak Obs by Hour												
Total $ Check	0.00	0.00	0.00	0.00	0.00	0.00	0.00	0.00	0.00	0.00	0.00	0.00
Total Obs Check	0	0	0	0	0	0	0	0	0	0	0	0

Total Avg. $/Mwh	$100.27
Off Peak Avg. $/Mwh	$98.09
Mid Peak Avg. $/Mwh	$101.54
Priority Peak Avg. $/Mwh	$102.98

13	14	15	16	17	18	19	20	21	22	23	24	SUM	DOW
99.8	101	102.5	97.5	98.3	107.1	107.5	95.1	99.5	102.7	93.3	97.1	2367.2	6
100.8	99.7	103.9	102.1	97.2	95.4	109.5	105.8	96.5	102.6	106.5	98.8	2388	7
98.7	99.1	102.1	99.3	97.1	94.4	107	106.9	94.3	104.6	93.2	98.4	2377.6	1
102.6	99.6	101	99.5	97.6	94.2	111.6	105.4	94	108.7	106.6	98.9	2410.9	2
98.9	97.5	97.4	97.8	97.8	95.7	110.2	110.7	93	105.8	109.2	98.9	2405.1	3
97.3	94.4	98.1	96.3	95	94.7	106	108.9	93	101.8	102.8	96.8	2369.2	4
97.4	97.1	97.6	97.8	96.7	94.5	110.2	108.6	97	106.9	93.2	95.1	2374.5	5
106.1	105.6	103.6	101.5	99.2	93.6	105.6	110.2	94.6	105.2	93.6	94.6	2411.5	6
102.1	104.5	107.7	104.4	102.6	96.5	105.3	100.7	101.9	106.6	94	93.4	2403.6	7
103.4	101	105.8	101.4	99.1	96.8	110.2	108.6	96.1	98.4	94.8	94.6	2403.5	1
100.1	99.7	101.9	99.1	96.2	96.1	105.3	110.8	99.2	104.5	96.2	94	2402.9	2
101.3	106.1	104.8	104.1	103.8	99.2	111.3	93.8	99.5	101.4	105.9	94.1	2420.1	3
98	99.6	99.9	96.5	96.9	94.6	109.5	105.4	93.9	104.2	95.6	98	2368.7	4
97.2	99	99.2	96.1	97.4	96.2	108	110.5	94.8	102.8	107.4	95.9	2380	5
99.2	99.7	100.7	98.8	96.1	93.5	108.1	108.9	95.3	101.2	106.9	98.5	2396.2	6
99.6	100.2	101.5	99.7	98.3	94.9	110	111.3	94	96.4	103.7	95.9	2396.6	7
92.9	93.6	97.2	96.7	96.2	94.1	110.3	105.3	107.2	96.9	105.1	100.8	2385.7	1
97.2	100.7	102.9	102.2	100.6	94.1	110.1	111.6	100.4	98.9	94.9	97.4	2394.2	2
94.9	97	96.2	95.6	94.2	93.3	108	111.6	103.3	104	95.1	96.9	2368.6	3
97.1	99.2	100.4	97.1	96.2	94.7	107.5	107.5	94.9	101.8	93	96.9	2369.4	4
92.8	94.2	95.2	97.1	95.5	92.8	110.6	93.7	98.5	103.2	107.2	97.5	2360.8	5
105.4	105.9	108.4	103.2	107.1	101.1	93.8	96.7	104.3	105.8	109	98.8	2435.8	6
105.3	107	104.8	101.2	98.5	96.9	111.6	108.3	94.9	104.7	95.3	97.2	2420.1	7
95.6	96.6	94.5	93.5	95.1	106.6	111	109.5	97.2	105.3	109.4	95.1	2374	1
94.5	93.7	94.8	93.9	99.6	108.6	108.9	111.3	97.2	98	108.5	95.9	2373.6	2
93.8	93.9	95.6	94.7	94.1	93.4	110.3	107.9	109.1	99.4	108.6	94.6	2366.2	3
100.2	97.3	96.5	93.3	93.4	94.1	105.6	106.5	96.1	99.1	109	93.8	2367.2	4
95.7	96.9	93.7	94.5	94.3	93.7	105.8	110.3	97.3	103.3	106.9	105.2	2379.1	5
101.3	100.2	100.7	99.1	97.9	95.8	110.8	94.5	100.1	102.3	94.7	96.6	2383.6	6
100.1	100.1	98.2	103.8	98.8	95	111.5	111.5	94.6	106.9	94.6	99.4	2411.8	7
97.2	96	97.1	94.9	93.3	94	111.2	111.6	110.4	99.8	108.8	92.8	2378.9	1
101.1	103.3	105.2	104.3	101	96.6	107.6	93.2	97	97.5	95.3	97.6	2399.9	2
103.6	106	106.3	103	98.9	95.3	109.2	110.5	99.3	107	97.2	100.3	2435.3	3
105.8	106.4	102.1	106.4	99.4	94.8	109.7	93.2	99.1	107	94.1	97.9	2412	4
101.9	102.1	103	100.4	96.3	96	93.3	93.6	98.5	104	108.5	93	2384.8	5
101.1	100.2	99.2	96.9	93.1	94.4	111.1	106.7	96.1	107.3	108.6	100.3	2399	6
98	97.2	100.6	98.6	97.8	96	110.9	108.5	93.2	104.4	107.5	93.6	2385	7
97.8	93.6	95.5	93.8	94.5	103.1	108.7	111.4	108.3	99	106.2	98.2	2381.5	1
94.3	93	95	93.9	95.3	95.4	109.7	107.7	106.2	100.7	95.2	94.3	2369.9	2
93.9	94.7	102.7	93.4	107.6	107.3	107.7	109.8	93.7	100.3	106.2	98.9	2394.6	3
95.7	95.2	94.9	106.1	101.3	98.6	109.5	110	106.8	98.2	94.8	98.9	2385	4
95.4	94.6	94.2	96.7	96.9	96	107.6	95.2	96.1	100.1	109.4	100.1	2346.8	5
106.1	107	106.3	103.9	100.8	97.3	94.5	94.9	100.5	107.1	94.1	94.1	2392.6	6
107.3	108.2	103.3	109.1	105.3	101.7	94.3	94.2	99.9	108.3	97.4	93.4	2426.5	7
100	98.6	99.2	97.3	96.4	96.6	102.3	108.7	95.4	103.4	95.3	97.1	2361.3	1
98.7	97.7	97.2	95.8	94.8	95.1	108.6	110.8	94.2	102.2	94	95.6	2357.5	2
96.3	97.5	98.5	98.8	97.7	94.6	106.1	109	96.8	101.1	103.4	96.2	2356.1	3
96	97.4	98.7	94.8	96.1	96.2	106.1	106.1	94.3	101.9	107.3	95.2	2347.8	4
98.8	98.2	95.5	95	97.7	96.2	109.3	93.4	97.8	102.1	108.4	99.3	2355.2	5
102.5	104.6	104.7	102.9	100.2	99.6	93.8	94.7	100.1	104	93.9	94.7	2375.2	6
103.5	104.3	102.3	102.1	102.6	98.5	96.8	93.6	96.5	102.8	95.2	95.4	2393.9	7
101.3	100.6	100.2	98.4	98.4	94.8	109.4	109.2	94.1	101.6	94.3	95.6	2376.3	1
99.2	98.2	97.7	96.1	95.7	93.3	111.2	106.2	93	102.5	108.7	93.7	2384.7	2
98	97.8	95.3	94	95.9	94.8	105.4	109.2	98.6	98.7	95.4	99.6	2349.3	3
96.6	94.9	94	95.7	94.6	94.4	111.5	108.6	93.4	98.6	107	99.7	2348.7	4
96.1	97.6	99	97.6	98.6	98.2	94.9	94.5	95.8	103.4	101.9	96.6	2334.6	5
102.5	103.8	102.8	100.1	98.9	96.2	94.2	93.3	96.5	105.5	109.4	93.6	2363.8	6
104.1	101.9	101.9	100.1	97.4	98.4	92.9	108	97.7	107.7	95.1	98.8	2375	7
95.9	98.5	96.7	97	96.4	96.5	102.7	107.5	97.2	100.3	109.6	94.1	2349.3	1
												0	
101.3	100.1	99.3	98.2	96.8	96.9	95	104	97	102.1	109	95.9	2362.6	2
99.6	100.1	98.6	100	98.6	96.8	93.4	110.8	96.7	99.9	109.1	96.3	2380.7	3
98.3	99.3	100.6	98.6	97.4	95.9	93.9	106	96.4	104.5	95.6	93.3	2361.9	4
99.3	98.7	97.1	95.9	99.1	99.5	96.9	93.4	98.4	102.8	95.5	98.5	2347	5
101.7	104.8	102.7	100	97.8	98.4	95.5	98.3	97.4	101.8	93.5	96.7	2362.6	6

13	14	15	16	17	18	19	20	21	22	23	24	SUM	DOW
106.6	105.3	106.3	106.7	101.8	99.3	94.5	108.7	96.4	102.1	109.1	95.9	2428.7	7
99	97.3	96.1	95	94.9	96.6	111.1	106.4	93.7	97.2	108.5	96.3	2364.4	1
99.7	94.7	93.3	107.4	98.7	95.3	106.9	109	100	95.5	104.2	99.1	2398.5	2
98.8	99.8	99.9	97.2	96.6	95.9	110.1	109.6	94.5	98.5	93	100	2359.8	3
106	107.7	108.6	108.1	104.1	99.6	95.3	95.1	99.7	106.5	93.9	96.9	2414.9	4
103.3	103.6	103.3	103	101.1	100.9	95.9	95.7	102.5	104.1	106.6	93.6	2381.9	5
106.3	107.7	105.7	105.8	109.2	107.2	99.9	96.9	106.7	104.7	96.8	98.2	2425.3	6
108.5	109.4	108.9	108.5	106.8	105	97.9	96.2	104.6	105.3	93.1	94.3	2291.7	7
104.8	93.8	95.4	94.2	104.4	93.2	110.4	112.8	110.6	105.5	96.9	99.8	2270.8	1
94.8	94.7	95.5	94.9	98.1	95.8	108.4	108.7	109.1	106.2	98.5	95	2296.6	2
92.9	94.8	93.8	99.6	93	106.3	109.8	110.3	105.2	93.4	95.2	99.7	2154.4	3
106.1	105.7	105.3	106.3	109.8	111.3	110.1	111.1	108.6	93.9	93.2	94.4	2417.4	4
105.5	106.2	106.1	106.4	106.2	107	110	109.9	111	102.8	98.8	101.2	2449.2	5
93.2	95.7	102.4	94.9	93.2	110.4	108.7	110.4	108.4	101.4	99.2	101.2	2403.1	6
94.5	95.7	95.7	104.8	104.8	105.3	108.4	112	109.1	98.8	99.4	98.6	2380.7	7
98.6	99.5	97.1	98.3	98.3	95.3	94.3	106	94.3	97.2	94.1	97.9	2344.9	1
98.9	98.4	95.2	93.9	94.1	93	108	107	93.3	96.9	108.8	93.7	2361.9	2
95.3	95	94.8	100.9	98.5	93	109.3	111.6	111.4	95.5	106.4	98.2	2392.9	3
93.4	109.9	108	93.1	97.2	92.9	108.8	107.7	92.9	96.3	104.8	98.1	2363.5	4
95.3	95.3	96.4	97	96.3	98.3	108.8	106.8	94.1	99.6	106.5	97.7	2360	5
105.4	109.2	107.9	103.4	106.6	100.9	95.9	96.5	103.9	105.7	103.4	98.2	2432.1	6
105.6	108.5	107.7	106.6	108.3	103	99.7	97.6	102.3	106.7	93.7	98	2430.6	7
101.8	101.7	101.9	100.3	96.1	94.7	94.2	105.7	93.7	99.9	97.1	99.9	2356.1	1
96.8	97.4	96.6	97.5	99	96	106.2	110.2	104.2	97.7	108.6	98.5	2384.9	2
97.2	94.6	95.2	94.3	97.2	94.9	107.5	105.7	94.8	98.6	109.4	99.8	2370.5	3
96.2	96.3	96.1	96.9	96.6	97.5	93.7	107.5	96	101.2	107.1	98.6	2380.7	4
99.6	100.3	99.8	99.8	100.7	100.7	96.4	97.4	101.1	106.3	95.2	95.4	2385.2	5
105.7	104	106	105.7	102.8	100.5	96.6	95.7	106.7	106.8	94.5	94.5	2402.3	6
107.9	109	107.3	108.3	100.1	100.1	95.2	98.2	101.9	106.5	99.6	96.8	2429.1	7
107.2	109.2	106.4	106.4	110.4	109.1	108.8	110	111.7	94.9	109	96.7	2490.9	1
111.3	107.2	106.6	110.4	107.9	108.9	112	109.4	93.6	94	108.7	96.2	2470.1	2
107.1	111.6	108.4	110.3	106.3	111.3	111.6	108.7	105.8	94.8	104.9	95.8	2504.8	3
111.7	109.9	110.8	110.8	110.9	108.1	108.7	110	111.5	93.5	104.5	94.1	2482.7	4
110.1	108.8	107.6	107.6	110.2	108.8	110	110	106.8	93.9	103.6	107.2	2494	5
109.7	108.5	111.1	111.1	109.3	107.1	105.3	110	110.9	96.8	101	109.4	2460.7	6
111.1	109.1	109.2	110.5	105.2	110.3	112.7	115.2	107.3	104.6	99.3	103.7	2508.4	7
92.9	105.8	106.2	106.2	105.8	109.6	108.2	108.6	109.4	102.1	107.6	98.5	2450.3	1
93.6	93.8	102	100.5	94.5	98	106.2	109.9	110.1	95.9	107.8	93.4	2359.6	2
105.8	111.6	92.8	92.8	105.2	107.2	105.5	108.4	111.3	96.3	106.7	98.4	2404.7	3
93.3	111.6	110.3	93	93	95.8	109.5	107	106.7	98.5	106	100.1	2418.2	4
110.6	109.3	93.7	111.6	94.7	94.1	110.9	110	93.8	98.1	106.5	97.4	2386.7	5
95.9	98.8	98.5	96.1	93.6	94.9	103.5	110.9	95.3	101.8	107.5	98.3	2357.8	6
98.9	99.8	100	98.1	96.4	94.7	94.1	108.1	98.8	105.3	94	96.8	2362.8	7
106.2	93.2	102.3	98.2	108.6	92.9	110.6	108.1	93.3	102.6	94.9	93.6	2367.2	1
94.6	93.4	94	93.7	94.9	95.1	110.3	108.6	94.9	105.5	94.4	94.8	2348.9	2
94.5	93.7	94.7	94	92.8	93.6	96.8	107.5	94.6	99	109.3	94.2	2325.6	3
93.8	94.1	93.7	109.3	93.3	93.2	96.9	111	92.8	98	108.2	93.3	2347.7	4
93.9	94.8	94.3	94	93.1	95.4	95.5	95.7	95.9	103.6	104.7	93.6	2343.9	5
102.1	101.8	103.4	102	100.5	98	95.3	93.6	102.5	105	96.5	96.6	2361.8	6
100.5	99.7	100.6	99.7	103.9	100	97.2	93.7	102.6	105.6	108	98.6	2384.4	7
95.2	95	95.7	93.5	93.9	94.1	93.8	106.8	94.8	101.7	95.5	98.6	2336.3	1
95.4	93.2	94.7	94	93.1	93.2	105.9	106.1	93.3	102.7	93.8	98.4	2354.2	2
94.3	93.4	106.3	96.1	108.8	105.9	108.3	108.8	108.2	99.6	107.2	99.7	2407.3	3
99.9	99.6	95	95.3	95.2	93.2	108.8	108.2	99.4	99.6	94.5	96.1	2372.9	4
99.4	100.7	99.2	97	98.5	100	97.9	96	100	104.2	101.9	93.3	2364.8	5
103.3	102.3	100.3	106.8	104.3	102.1	97.5	94.6	98.6	106	99.2	96.2	2398.2	6
97.5	96.6	97.1	94.1	94.8	93.2	103.3	109.1	95.6	98.2	108.7	95.6	2350.1	7
105.8	108.9	110.7	111.6	108.5	106.6	111.6	109.5	109.4	95.1	104.4	109.5	2484.4	1
111.5	109.5	106.9	110.8	105.3	108.3	111.3	111.8	107.1	110.7	101.5	94.2	2480.6	2
108.2	111.3	107.1	110.9	111.3	110.4	106.9	112	111.6	110	102.9	93.7	2514.6	3
105.8	108.4	109.4	111.3	110.5	109.8	110.4	111.9	109.3	108.8	106.8	109.5	2542.3	4
111	113.1	109.8	111.6	105.6	110.3	111.6	107.5	107.8	93.8	105.7	107.7	2535.8	5
95.7	97.9	106.3	107.7	93.6	93.8	104.8	109.6	93.4	94.3	102.4	106.9	2390.6	6
109.1	109.2	108.5	107.1	104.6	101.8	99.8	100.1	100.6	103.3	96.9	95.8	2439.9	7
94.3	93.4	95.2	96.8	96.9	96.4	94.3	93.2	96.4	100.7	94.9	95.2	2330.8	1

13	14	15	16	17	18	19	20	21	22	23	24	SUM	DOW
97.3	95.6	94.5	94.8	94.5	98.5	95.3	92.9	95.1	101.1	92.9	96.3	2342.1	2
94.5	94.8	94.7	94.6	94.7	95.4	96.8	111.5	95.7	100.4	93.2	95	2339.4	3
95.3	96	94.9	94.2	97.4	96.2	95.8	94.9	95.8	100.9	108.5	95.1	2336.4	4
94.5	96.4	94.3	97.2	99	100.7	98.8	95.6	97.9	109.6	105.7	94.3	2378.6	5
101.2	101.6	101.8	100	99.7	98.6	99.9	98.8	102.2	103.6	93.4	99.3	2382.7	6
107.2	105.5	106.7	105.2	106.8	110	108.3	109.9	109.8	97.4	98.2	100	2433.8	7
112.3	110.1	110.1	110.2	110.1	110.7	110	110.3	108.8	108.5	100.3	93.6	2493	1
111	110.1	112.7	110.1	112.7	110.6	108.8	110.1	111.1	108.5	100.5	101.2	2500.5	2
110.1	110.1	108.7	112.3	108.9	105.7	110.4	109.5	108.1	106.5	98.5	97.9	2493.9	3
106.6	109.7	110.1	108.8	111.5	106	107.3	110.4	106.8	93.8	97.9	98.3	2463.5	4
109.1	107.4	109.5	109.7	110.6	106.6	109.7	110.3	106.4	93.6	100	100.9	2470.7	5
110.3	93.8	101	105.1	105.8	109.9	106.3	105.7	107.2	96.5	95.7	101.2	2398.8	6
102.6	102.4	104.3	102.7	100.4	98.7	97.7	95.5	97.8	101.7	93.1	94.8	2385.8	7
95	101	95	93	94.8	97.8	95.9	107.2	93.9	103.8	95	99.6	2365.7	1
94.2	94.2	95	97.4	96.9	100.9	98.9	93.5	95.3	106	109.6	99.7	2363.5	2
95.3	94.9	94.5	93.4	95	97.8	97.4	93.1	96.6	105.7	109.3	95.8	2333.3	3
95.7	94.6	94.8	97.9	95.6	99.4	101.4	93.8	94.8	104.7	108.7	99.8	2351.3	4
94.6	94.8	95.4	95.1	98.9	102.1	104.2	97.3	103.6	104.4	109.1	94	2387.5	5
106.4	106.5	107.3	106.8	101.3	105.3	103.4	101.7	105.4	106.6	109.4	96.7	2431.7	6
104.8	105.4	105	103.1	102.4	100	99.5	99	106.3	107.9	93	93.9	2398.2	7
102.7	102.8	101.2	106.8	103.8	100.9	96.6	96	102.5	104.8	95.1	94.8	2399	1
94.5	93.6	93.4	99.8	109.6	95.6	94.9	110	107.2	98.7	105.8	96.2	2370.7	2
107.4	108.9	110.5	112	109.9	109.9	108.7	112.5	111.3	109.9	101.6	106.9	2526.4	3
108.3	108.6	107	108	106.8	107	109.6	107	109	102	102.9	108	2506.7	4
107.4	108	111.4	109.2	106.3	109.9	107.6	109.1	111.1	93.2	100.1	106.1	2497	5
110.5	110.4	111.7	106.4	108	110.4	108.4	106.5	107.1	93.9	103.1	105.7	2495.3	6
94.4	93.8	96.5	107.5	95.5	107.6	93	108.6	109.2	94.3	105.9	109.5	2415.5	7
110.9	*109.9*	*110.6*	*112.6*	*109.9*	*111.1*	*110.4*	*112.6*	*108.6*	*109.5*	*99.3*	*107*	*2534.8*	*1*
108.6	109.9	112.6	110	108.6	107.1	110.5	112.3	108.7	95.3	99.8	109.3	2525.1	2
108.6	108.6	112.6	111.5	109.9	107.9	109.4	110.9	105.4	103.3	99	109	2506.9	3
108.6	109.9	109.9	112.3	109.9	109.1	107.8	112.6	109.4	106.9	99.7	108	2496.9	4
108.6	109.4	111.7	106.5	111.7	107.9	106.7	110.4	109.8	98.8	99	103.6	2483.1	5
106	101.1	95	108	108	106	96.1	107.3	105.6	93.7	100.6	106	2419	6
102.6	94.1	98.4	94.4	108	92.9	101.1	105.7	107.9	100.1	102.5	108.7	2399.7	7
109.8	109.7	108.8	108.7	108.4	110	110.6	112.1	109	110.5	101.1	105.5	2510.4	1
93.6	94.4	93.5	94	98	99.6	99.9	93.7	93.9	102.7	98.3	97.5	2322.5	2
111.7	108.4	109	108.7	109	111	111.5	106.8	110.4	107.6	103.4	106.8	2531.1	3
106	111.3	109.1	109.5	106.8	108.6	106.1	109	110.6	105.6	100.5	105.3	2523.2	4
109.5	111.2	107.4	111.3	108.6	106.7	109.8	106.6	109.3	109.6	104.8	105.9	2548.5	5
110.7	97	109.3	107.7	107.3	110.3	106.8	105.8	107.7	94.2	103.9	105.4	2474.7	6
96	94.2	94.1	108.8	105.9	108.7	105.5	106.2	101.8	94	104	108.7	2412.9	7
116.6	115.2	114.6	115.5	115.4	114	111.9	112.4	112.1	111.9	110.1	98	2631.2	1
115.5	115.5	115.3	111.9	114.4	115.4	114.8	112.8	112.5	106.9	93.8	99.8	2605.3	2
114.7	113.2	111.7	114.5	115.3	111.9	111.4	113.2	112.1	106.8	106.7	100.5	2619.9	3
113.4	115.7	116.5	116.9	112.4	112	114.2	115	112.8	111.3	93	99.3	2611.3	4
115.4	113.4	114.7	115.5	111.1	111.1	114.8	115.3	115	110.6	94.3	96.5	2610	5
111.8	111	114.4	112.2	110.9	112.8	112.9	111.9	115	108.6	94.3	96.5	2583	6
109.7	112.3	112.7	110.9	110	110.8	112.4	111.5	112.4	108.4	106.1	100.4	2590.2	7
105.4	106.5	107.8	109.6	107.8	108.4	107	111.2	107.6	103.3	102.6	108.8	2503.3	1
94.7	96.3	94.3	95.8	97	98.3	99.2	95.1	96.2	104.4	106.9	98.3	2333.2	2
93	94.1	95	96.8	99.7	101.5	100.7	95.3	94.8	101.1	108.1	98.9	2343.1	3
97.8	94.2	94.2	96	96.8	98.5	100.5	94.3	96.1	100.5	108.3	95.4	2355.2	4
95.7	93.1	98.1	111.2	94.4	94.8	95.9	95.9	96.7	102.2	108	98.2	2347.3	5
101.5	99.9	101	99.3	98	98.3	97.4	95.3	98.6	105.1	93.8	95.1	2385	6
107.8	107.4	106.6	105.2	103.3	101.3	100.7	96.7	99.7	105.9	94.2	96	2400	7
98.6	98.6	97.9	98.8	97.3	97.6	99	100.2	106.8	104.9	107.6	100.4	2366.6	1
109.3	106.9	106.9	94.9	93	94.8	94.6	107.5	110.8	98.9	95.7	93.5	2392.5	2
93.3	110.7	107.4	109.3	110.1	93.6	98.1	107.5	94.9	98.6	93.3	97.1	2392	3
107.1	93.3	93.8	94	93.9	94.4	95.5	107.4	95.6	99.5	108.6	93.9	2371.5	4
93.2	94.4	108.6	94.8	96.1	95.7	95.4	93.6	95.7	100.1	108.9	100.4	2338	5
96.2	97.9	99.2	96.9	97.4	96.5	97.5	95.3	95.4	101.6	107.1	93.5	2365.3	6
101	101.6	103.9	102.2	100.9	100	99.4	96.4	97.2	103.5	93.6	95.2	2386.1	7
111.3	111.3	108.2	99.9	94	95	93.3	110.8	105.2	100.3	107.4	93.4	2395.2	1
94.8	94.7	93.3	111.5	94.2	93.4	98.4	106.3	106	99.7	108.5	93.2	2374.2	2
93.2	93.6	95.3	99.9	111.5	93.4	102.4	107.6	94.5	100	107.1	93	2353.8	3

13	14	15	16	17	18	19	20	21	22	23	24	SUM	DOW
111.3	104.1	106.2	108.1	97.4	93.4	94.2	108.9	106.2	98.5	93	99.6	2388	4
95.3	93.4	94.1	96	94.8	95.2	96.4	97.2	95.7	109.3	95.6	100	2347.7	5
96.8	95.5	96	96.8	95.1	95.4	98.1	94.2	97.1	101.5	108.9	94.4	2343.1	6
102.9	100.6	102	99.6	98.3	98.7	97.5	95	95.5	101.3	106.1	94.5	2382.8	7
93.1	93.8	98.2	97	110.2	94.7	92.9	107.4	108	98.3	95.1	100.5	2363.9	1
106.2	106.8	103.8	110.9	93.5	93.5	94.3	103.8	94.1	97.2	108	92.7	2409.8	2
93.5	93.1	94.1	95	100.8	94.7	94.4	102.2	93.1	99.3	109.4	94.8	2339.1	3
97.2	95.2	96.4	96.4	96.5	95.3	95.9	94.7	93.8	99.2	109.6	94.1	2329.1	4
92.9	94.3	103.8	93.8	100.8	96.9	95.9	99.4	97	98	95.5	99.8	2323.1	5
98.6	97.6	97.2	95.5	96.8	96.6	95.2	95	95.3	99.9	95.7	99.5	2343.4	6
100.3	100.8	98.1	98.6	96.3	97.7	94.9	111.4	94.2	99.9	108.6	93	2408.7	7
107.6	106.5	111.3	111.3	108.8	109.3	107.5	110	111.5	97	109	96.3	2485.5	1
106.8	106.1	111.3	109.3	110.1	93.2	110.7	108.1	110.9	97	94.9	95.1	2435.2	2
93.4	107.5	108.1	93.4	99.7	106.6	94.6	108.1	99.5	98.8	95.4	100.3	2399.2	3
110.2	94.1	107.5	108.9	109.6	106.2	108.6	110.2	95	97.9	95.6	98.2	2421.6	4
95	94	93.9	94.7	93.9	95.4	97.1	94.6	95.5	102.2	107.3	99.5	2342	5
98.4	97.9	99	97.1	99	97	98.6	95.2	96.3	102	108.6	100.4	2368.2	6
100.8	99.7	98.9	97.3	99.8	98.5	97.2	94.5	95.3	101.3	107.1	94.4	2377.9	7
111.3	110.5	111	109.1	107.7	105.2	110.4	111.3	110.4	95.6	104.2	98.6	2501.3	1
107.1	107.4	109	110.4	109.3	107.7	111.6	110.6	111.7	94.8	105	99.3	2497.9	2
110.4	109	106.8	109.8	107.9	110.4	106.4	109.2	100.5	95.8	106.2	92.9	2468.9	3
108.5	109.8	105.8	107.3	111.7	109.8	107.7	111.2	107	98	108.6	93.9	2449.9	4
107.8	105.8	109.9	109.7	105.2	109.7	108.4	106.5	93.6	95.9	103.7	97.2	2432.6	5
93.5	94.6	94.1	94.5	93.5	93.8	93.8	104.9	97.8	97.7	105	97.9	2326.8	6
95.2	93.9	95.6	95.3	93.6	94.3	94.2	106.5	97.8	100.6	107.6	99.3	2361.3	7
110	110	111.2	111.3	111.1	111.3	110.6	108.6	106.8	93.8	108.8	96.9	2504.1	1
110	110.1	110	112.5	110	109.6	111.8	109.5	108.5	94.1	104.2	98	2507.5	2
112	110	108.6	110	109.1	109.7	109.1	109.6	106	93.9	107.6	95.7	2498.9	3
111.2	111.1	110	109.1	107.4	108	107.8	108.8	111.2	94.4	104.2	98.9	2502.4	4
109.3	108.8	106	108.6	106.8	107	93.4	109.1	93.7	99	104.9	98.5	2444.5	5
94	95.3	95.5	94.1	109.6	104.9	94.1	109.7	94.6	100.8	108.7	101.7	2368.2	6
98.2	97.1	94.3	95.4	96.5	94.9	93.9	104.9	93.5	98.6	109.5	94.4	2348	7
109.9	112.4	110.3	109.7	109.1	107.8	105.8	111.9	108.5	94.3	104.6	98.8	2476.6	1
108.9	108.7	110.5	111.2	109.1	109.7	93.6	110.7	107.7	98.7	107	98.3	2488.8	2
111.3	108.5	108.6	108.7	107.7	107.2	100.4	109.6	97.8	96.2	106.6	105.6	2458.5	3
107.1	110	112.7	109.9	109.8	103.3	93.2	108.5	104.8	96.5	105	96.7	2472.4	4
111.1	110.4	108.5	108.3	109.8	110.4	109.1	107.1	94	100.3	103.7	95.1	2435.4	5
93.2	95.1	100.2	93.5	93.4	95.5	95.8	94.3	96.7	101.8	95.8	94.5	2330.4	6
97.4	98.3	96.8	95.1	96.9	94	93.9	109	95	99.7	94.2	95.9	2332.8	7
111.4	106.8	108	111.1	107.1	106.5	109.1	108.7	93.6	97.1	99.6	95	2435.3	1
109	106.6	111.8	104.8	106.5	92.9	94.7	110.3	94.6	97.8	94.4	98	2395.1	2
105.7	108.3	111.5	105.7	107	93.4	110.2	110	94.3	101.5	100.9	94.9	2408.3	3
110.7	106.2	108.1	106.8	108.6	93.4	100.7	105.4	110.2	98.7	109.6	93.9	2440.3	4
105.9	106.2	109.5	108.9	108.2	98.2	93.5	105.3	94.1	97.1	101.1	96.2	2430.3	5
94.5	93.5	93.9	94.2	93.9	95.1	96.2	93.3	97.6	100.5	93.1	93.5	2318.7	6
100	101.7	101.7	101.9	99.4	97.9	96.3	107.1	99	106.2	95.8	97.6	2393.9	7
106.7	108.9	107.4	108.7	110.9	108.3	110.3	108.9	109.2	96	107.6	103.1	2474.5	1
111.5	109.6	108.9	108.7	106.3	99.1	108.9	108.7	95.6	97.5	109	93.2	2450.1	2
106.1	111.4	109.5	110.8	110.9	106.6	110.9	109.6	107.1	96.3	108.3	105.6	2487.9	3
108.7	110.1	109	110.5	105.7	108	107.6	112.8	106.5	94.4	105.8	108.7	2508.2	4
108.4	109	110.1	110.1	108.7	110.9	108.8	111.6	93.3	96.5	103	94.4	2485.7	5
105.4	108.7	108.7	110.7	108.2	102.4	109.4	105.6	107.9	97	106.4	107.9	2459.9	6
94.2	95.9	94.3	94.4	102.1	95.5	94.8	105.9	93.1	98.1	106.5	107.5	2382.1	7
108.8	109.5	106.8	105.5	111.5	108.7	107.4	111.1	110.1	96	107.2	109.4	2452.3	1
108.3	109.8	110	109.1	106.3	111.4	106.7	109.5	110.8	94.9	109.5	93.4	2495.9	2
108.1	105.4	111.1	109.4	106.3	108.8	107.7	110.1	111.5	97.4	109.6	92.8	2500.5	3
108	107.2	109	105.9	109.2	110.8	109.2	111.7	107.5	97	108.7	93.2	2497.9	4
108.5	107.2	109	109	111.6	111.3	107.4	109	99.6	94.1	105.5	93.1	2479.1	5
110.8	108.1	106.8	105.5	106.2	107.5	108.7	107.7	92.9	97.6	105.2	95.4	2443.6	6
94	92.8	94.7	94.2	95.9	93.7	110.1	105.9	109.3	96	109.1	92.9	2381.3	7
107.9	108.7	109.2	111.3	108.1	107.5	108.1	109	108.8	95.7	108.5	101.7	2510	1
108.3	110	108.7	106.4	111.2	108.3	105.2	115.4	105.9	95	105.8	109.4	2505.1	2
106.7	105.3	109	107.9	106	110	109.9	110	105.4	101.1	107.2	103.1	2492.2	3
110.3	107.3	108.1	105.4	106.1	110.2	105.6	107.9	109.4	96.8	108.5	92.8	2479.5	4
110.8	106.9	105.3	109.5	105.2	93.4	108.1	111.4	93.8	100.2	109.2	108	2487.6	5

13	14	15	16	17	18	19	20	21	22	23	24	SUM	DOW
93.9	98	93.7	96.8	95.1	94.6	94.7	111.5	94.3	106.5	106.6	108.4	2354.9	6
96.9	97.9	97.8	97.4	95.7	94.6	98.1	111.4	96.4	106.1	108.6	97.1	2365.3	7
106.8	110.8	111.4	108.7	106.1	109.5	109.9	109	93.1	98	106.3	95.9	2468.8	1
94.6	108.8	109.5	92.9	93.6	95.6	93.2	110.7	95	108.2	108.2	97.7	2362.1	2
93.9	93	93.7	93	102.4	94.1	99.9	106.2	97.3	102.5	107.5	97	2325.6	3
93	94.5	94.8	93.8	95.9	97	97.3	108.5	94.4	104.4	92.8	94.1	2311.5	4
105.8	110.5	110.2	108.1	94.9	96.4	105.4	105.4	96.7	100	106.8	97.7	2453.4	5
98.3	93.6	92.9	93.3	92.9	93.5	110.5	110.5	94.9	100.9	109.6	100.3	2373.9	6
96.1	93.8	96.3	97.5	96.7	95.7	99.9	105.8	93.9	104.3	94.3	95.3	2342.7	7
93.4	99.8	111.3	95.1	94.8	95.3	105.4	108.8	94	100.3	95.7	97.9	2364.8	1
94.3	94.5	94.3	95.9	97.3	100.8	93.9	108.7	98.4	103.6	93.4	99.7	2332.9	2
93.9	94.8	95.1	93.5	96.4	98.7	93.4	93.1	98.1	102.5	109	99.5	2339.5	3
93.9	95	94.3	97.7	96	96.5	98.3	94.7	96.1	105.5	109.1	97.8	2332.2	4
94.3	94.3	96.1	94.8	94.2	103.2	93.3	95.8	106.3	109.6	101.9	98.1	2339.9	5
93.4	94.7	98.5	97	98.6	99.3	94.4	94.9	100.7	104	107.5	93.2	2359.5	6
96.6	97.7	99.9	97.4	97.1	98.2	110.8	110.4	100.1	101.8	108.1	96.5	2396	7
107	110.9	107	93.6	93.9	95.2	109.7	106.5	93.9	105.2	107.5	98.6	2420.1	1
101.1	106.4	107	106.9	95.3	98	111.1	105.3	95.9	106.7	107	96.2	2407.5	2
94.4	98.1	93.3	107	106.3	94.3	110.6	109.6	94.4	103.5	94.5	96	2378.9	3
108.2	110.7	94.6	94.8	94.9	93.8	108.4	109.2	95.4	99.6	105.2	96.8	2392.5	4
106.9	108.2	109.6	105.8	98.1	95	110.4	93.6	97.9	100.2	94.9	95.9	2409.8	5
99.5	98	96.4	97.3	94.3	95.9	107	106.9	103.7	106.2	108.2	95.1	2411.3	6
105.2	103.6	102.5	100.4	96.5	95.4	93.8	94	99.7	97.6	109.4	98.5	2390	7
98.8	108.6	107.7	104.7	106.9	109.3	109.3	111.7	93.3	102.9	107.5	97.3	2452.8	1
95.5	109.8	105.8	106.4	107.7	106	108.6	109.3	93.3	103.8	94.9	97.3	2426.3	2
93.7	94.4	93.3	93.2	93.9	102.8	111.1	111.7	94.7	105.4	108.5	97.9	2387.5	3
93	94	94.1	94.3	95	93.1	111	109.7	95.2	106.2	107.4	98.1	2360.6	4
94.2	93.2	111	96.6	106.3	96.3	107.7	94.3	101.3	103.3	95.9	96.5	2360.7	5
102.9	100.6	99.5	97.6	96.8	98.3	100.1	95.3	109.3	106.7	109	96.6	2387.9	6
105.9	99.4	94	94.6	93.4	93	108.9	110.5	93.7	106.4	94.1	95.5	2360.4	7
110.3	106.3	107.1	107.3	107.8	93.2	110.1	111.4	93.2	102.6	93.8	95.6	2449.9	1
108.8	108.1	97.5	93.2	96.4	111.1	105.5	108.6	96.3	107	108.2	98.7	2420.8	2
107.8	108.6	107.5	101.4	100	93	110.1	107.5	94.5	102	93.6	96.2	2431.9	3
107.2	107	108.9	110.1	110.2	106.8	109.2	112	111.1	100	99.6	93.3	2495.4	4
110.9	110.3	110.5	110.5	107.2	108.6	110.5	98.9	97.4	105.8	99.6	93.2	2453.8	5
96	97	96.3	96.1	94.3	95.2	109.8	95.4	105.1	104.8	107.2	97.5	2379	6
105	106.9	107	103.5	106.8	97.8	95.4	93.6	101.6	108.9	95.3	93.8	2399.3	7
94.4	100.1	94.3	93.2	94.1	93.2	110	111.6	96.2	107.4	109.6	100.3	2365.8	1
93.2	93.6	108.8	110.3	100.3	101.5	110.3	110.5	95.6	105.6	109.5	98.2	2395.5	2
94.1	109.8	110.4	109.1	111	94.3	108.6	109.7	94	107.1	109.5	99.5	2419.7	3
95.2	96.8	93.2	110.8	98.8	94.2	109.2	106.4	95.2	106.9	94.9	97.2	2351.7	4
99.8	93.4	102.7	95.3	96.1	109.2	94.2	94.7	106.7	105.1	95.6	98.7	2363.6	5
106.9	107.1	100.3	105.6	103.7	93.2	93.3	98.4	104.7	103.4	99.2	94.2	2410.5	6
107.1	105.6	105.4	103.6	97.2	111.1	111	94	105.9	104	108.3	99.5	2437.9	7
107.3	110.7	105.8	110.3	110.4	93.4	93.3	97.2	100.2	103.9	93.4	97.1	2417.8	1
100.3	101.7	95.3	93.3	95.3	103.2	105.6	105.3	95.9	106.9	95.1	99.2	2396.1	2
96.2	94.4	94.4	93.5	94.7	94	108.8	97	96.5	106.5	94.3	97	2351.4	3
95.5	96.3	96	99.1	99.7	97	107.3	105.8	96.5	99.7	93.7	97.3	2373.2	4
96.1	94.4	95.5	95.6	98.3	98.2	102.1	94.6	100.9	101.3	105.7	93.5	2374	5
105	106.1	105.9	105.6	104.3	98.2	95.2	101.2	105.4	106.5	94.8	95.1	2423.2	6
100.3	100	100	100.5	100.1	101.7	94.5	98	101.5	105.8	108.4	99.9	2385.2	7
96.8	96.2	95.5	96.2	97.4	95.3	107.3	107.1	98.5	102.5	95.8	95.9	2360.3	1
96.5	96.2	98.1	98.1	97.8	101.6	105.5	101.9	96.6	106.1	93.4	97.3	2378	2
96.3	96.7	95.3	95.6	97.1	94.7	107.5	97.8	102	100.3	94.4	96.4	2358.4	3
96.8	96.3	97.2	97.7	99.1	96.5	96.8	94.5	104.7	101.7	95.8	98.1	2353.5	4
101.5	102.7	101.6	99.5	97.7	96.6	109	97.3	99.1	101.9	94.7	96.5	2381.6	5
100.6	104	106.2	103.7	100.8	96.2	93	98.3	100.9	105.1	98.7	97.1	2388.7	6
101.3	99.6	106.6	106.8	104.5	97.4	109	97.6	102.5	105.4	94.9	98.2	2412.7	7
96.4	97.8	95.8	96.9	97.8	94.1	100.5	103.3	95.3	105.2	108.5	100	2388.5	1
93.5	94.5	94	97.4	99.3	97.7	107.1	110.4	97.4	100.2	95.2	98.7	2360.1	2
98.2	100	97.5	96.9	99.8	95.9	108.6	93.1	102.5	107.2	108.4	99.2	2392.2	3
97.4	97.6	96.5	98.9	100.5	96.3	107.7	94.6	103.5	100.3	95.5	93	2353.1	4
100.6	101.6	99.9	100	102.2	97	95	99.4	98.9	101.5	93.8	96.2	2373	5
104.9	101.9	104.9	101.1	101.3	97	95.4	98.3	100.4	102.6	94.9	97.8	2392.5	6
107.4	100.1	105.2	101.9	100.6	97	107.7	93.9	99	104.2	108.5	98.2	2408.4	7

13	14	15	16	17	18	19	20	21	22	23	24	SUM	DOW
94.7	95.6	94.1	96.1	94.7	93.2	108.9	105.5	100.4	100.1	108.2	96.7	2380.6	1
94.4	94.6	97	99.1	93.4	103.6	108.7	109.5	97.4	98.6	104.7	97.4	2362.7	2
94.1	95.2	96.1	103.5	93.6	110	107.6	105.2	94.4	95.5	104.9	98.6	2368.5	3
97.1	97.3	99.5	99.8	98.7	101.3	100.4	106.2	106.9	103.7	108.8	98.4	2394.2	4
96.4	96	95.7	95.4	97.6	109.6	105.9	98.9	105.4	108.5	109.1	93.3	2401	5
103.5	103.9	105	100.7	101.2	107.7	102	96	104.2	107	107.4	97.8	2430.3	6
105.9	107.5	108.7	107.8	104.4	94.3	94.9	97.9	106.9	107.4	93.7	97.8	2412.3	7
98.4	97.3	99.5	102.3	95.1	98.7	107.7	92.9	103.4	105.5	109.6	94.7	2397.1	1
96.4	95	101.9	99.6	101.2	95	111.4	107.1	102.9	106.8	98.6	93.3	2390.5	2
97.9	97	93.8	94.3	96.4	93.6	107.5	94.5	99.7	105.4	107.5	98.3	2379.5	3
96.2	97.6	97.6	97.4	98.5	96.3	110.6	106.1	98.7	102.8	107.6	93.7	2386.5	4
100.3	97.3	97.4	96	97.8	94.4	110.1	94.8	104.9	102.8	95	97.4	2371.7	5
103.8	101.1	100.8	100.4	99.8	100.9	94.1	99.7	104	108	107.1	100.3	2400.7	6
109.2	104	103.3	109.1	105.2	99.1	110.1	94.8	100.4	109.2	96.8	99.8	2449.6	7
102.3	100.3	101.2	103.3	105.1	98.2	106.1	93.4	97.1	103.5	95.8	97.3	2410.6	1
105.6	105.3	105.4	106.2	107.3	103.1	106.7	95.2	102.3	106.7	98.8	95.5	2447.6	2
105.4	101.6	101.6	104	103.1	100.4	93.9	94.5	101.3	109.2	93.5	95.1	2406.4	3
106.7	102.8	103.1	103	103.8	98.2	110	94.9	96.3	104.6	104.9	92.8	2397.3	4
104.7	105.3	103.9	103	102.9	98.4	110.1	99	104.8	109.2	108.9	98.9	2451.8	5
109.1	106.4	109.4	109.1	106	107.1	96.3	98.4	106.8	104.3	93.2	94	2434.2	6
106.6	106.8	105.9	103.5	108.2	106	101	94.5	101.4	104.4	96.6	97.5	2414.8	7
101.6	100.6	99.6	99.8	107.4	102.7	107.4	94.5	104.9	104.9	97.1	94.5	2408	1
102.7	104.1	106.4	104.7	104.2	100.5	94	98.1	99.6	109.2	98.4	97.8	2412.9	2
105.5	103.3	100.6	101.4	102.2	104.1	93.8	97	99.3	109.5	94.6	97	2411	3
105.4	105	103.6	102.4	102.3	104.4	93.3	96.8	98.2	106.2	93.5	95.8	2390.6	4
103.8	102.7	102.7	103	102.4	105.5	99	101.1	100.4	105.7	94.2	95.2	2433.3	5
103.9	107.2	106.2	105	109.2	103.3	95.7	102.4	107.8	104.7	95.7	94.4	2431	6
94.7	93.6	109.2	108.2	105.4	106.1	97.4	95.3	99.5	100.6	95.7	99.5	2390.8	7
106.1	104.8	102.9	103.6	104.8	94.3	107.3	94.7	99.4	109.3	97.8	95.7	2406.5	1
103	102.5	100.4	100.5	98.3	93.7	109.9	106.7	95.4	107.3	96.2	100.1	2394.6	2
100.5	100	97.3	96.5	96.1	94.6	107.8	105.4	95.4	102.7	94	98.5	2390.2	3
99.9	97.2	98.5	100.5	99.2	95.5	109.8	110.7	95.9	103.2	107.6	98.2	2397.1	4
106.3	106.1	106.2	107.1	100.2	100.2	107.5	92.9	98.3	102.2	95.3	98.6	2420	5
109.4	108.5	109.2	105.6	107.4	101.9	92.9	99.6	104.9	104	109.3	98.7	2461.4	6
97.5	97.5	95.1	97	108.2	108.3	102.8	107.5	109.6	108.2	95.9	95.1	2406.6	7
106.9	108	106.9	104.7	100.9	98.4	110.4	110.6	95.5	103.3	98.3	98.9	2436.6	1
98.7	99.8	101	101.2	98.5	96.3	110	109	103.7	108.8	106.3	96.7	2418.4	2
97.1	96	98.3	94.7	94.6	106.8	113	107.1	95.2	100.9	106.1	97.9	2382.6	3
96.6	96.7	95.8	93.8	92.9	108.8	110.5	109.8	95.7	102.3	105.1	94.7	2374	4
94.6	94.5	95.1	93	93.4	107.7	105.8	108.9	94.9	103.8	107.5	97.9	2366.1	5
105.1	102.9	104.3	101.7	95.5	110.3	107	98.7	97.9	106.1	109	94.1	2423.1	6

13	14	15	16	17	18	19	20	21	22	23	24
37,118	37,157	37,283	37,168	36,966	36,632	37,932	38,132	36,779	37,243	37,218	35,714
365	365	365	365	365	365	365	365	365	365	365	365
									37,243	37,218	35,714
									365	365	365
37,118	37,157	37,283	37,168	36,966	10,498	10,594	10,695	10,592			
365	365	365	365	365	105	105	105	105			
					26,135	27,338	27,437	26,187			
					260	260	260	260			
0.00	0.00	0.00	0.00	0.00	0.00	0.00	0.00	0.00	0.00	0.00	0.00
0	0	0	0	0	0	0	0	0	0	0	0