BEFORE THE PUBLIC UTILITIES COMMISSION
OF THE STATE OF HAWAII

In the Matter of the Application of	)	
	)	
HAWAII ELECTRIC LIGHT COMPANY, INC.	)	Docket No. 05-0315
	)	
For Approval of Rate Increases and Revised Rate Schedules and Rules.	)	
	)	

RESPONSES TO
CONSUMER ADVOCATE
INFORMATION REQUESTS

BOOK 4 OF 7

January 12, 2007

CA-IR-201

Please indicate if Dr. Morin is aware of any academic or other studies that maintain that all investors rely exclusively on analysts' forecasts of earnings per share in making investment decisions. Please cite any such studies that maintain this and indicate specifically where in the studies such a claim is made.

Dr. Morin's Response:

Extensive academic research in the past two decades has documented and confirmed repeatedly the overwhelming superiority (not exclusivity) of analysts' earnings forecasts over the uni-variate time-series forecasts. This latter category includes many *ad hoc* forecasts from statistical models, ranging from the naive methods of simple averages, moving averages, etc. to the sophisticated time-series techniques such as the Box-Jenkins modeling techniques.

In other words, this literature suggests that analysts' earnings forecasts incorporate all the public information available to the analysts and the public at the time the forecasts are released. Furthermore, these forecasts are statistically more accurate than forecasts solely based on historical earnings, dividends, book value equity, and the like.

This finding is based on research on data from the 1950s to the 1980s. Important papers include Brown and Rozeff (1978), Cragg and Malkiel (1982), Harris (1986), Vander Weide and Carleton (1988), and Lys and Sohn (1990). The cited sources were consulted by Dr. Morin at the university library and are available from most university libraries. A summary of these papers follows.

Summary of Papers Reviewed

Lawrence D. Brown and Michael S. Rozeff, 1978, **The Superiority of Analyst Forecasts as Measures of Expectations: Evidence from Earnings**, *Journal of Finance*, Vol. XXXIII, No. 1, pp. 1 to 16

Using data (1951 to 1975) from 50 non-utility firms, the authors compared forecasting errors between forecasts reported in Value Line Investment Survey and forecasts from a sophisticated time-series methodology (Box-Jenkins). They concluded that "Value Line Investment Survey consistently makes significantly better earnings forecasts than the BJ [Box-Jenkins] and naive time series models." (p.13)

J. Cragg and B. G. Malkiel, *Expectations and the Structure of Share Prices*, National Bureau of Economic Research, University of Chicago Press, 1982

See quotation below from Harris (1986).

Robert S. Harris, 1986, **Using Analysts' Growth Forecasts to Estimate Shareholder Required Rates of Return**, *Financial Management*, Spring 1986, pp. 58 - 67

The main focus of this paper was to derive required return on equity using expected rather than historical earnings growth rates. Harris used IBES consensus earnings forecasts as a proxy for investor expectation. In his review of the literature on financial analysts' forecasts (FAF), Harris wrote:

> Moreover, a growing body of knowledge shows that analysts' earnings forecasts are indeed reflected in stock prices. Such studies typically employ a consensus measure of FAF calculated as a simple average of forecasts by individual analysts. Elton, Gruber, and Gultekin show that stock prices react more to changes in analysts' forecasts of earnings than they do to changes in earnings themselves, suggesting the usefulness of FAF as a surrogate for market expectations. In an extensive NBER study using analysts' earnings forecasts, Cragg and Malkiel conclude "the expectations formed by Wall Street professionals get quickly and thoroughly impounded into the prices of securities. Implicitly, we have found that the evaluations of companies that analysts make are the sorts of ones on which market valuation is based." (p.59, footnote omitted)

James H. Vander Weide and Willard T. Carleton, 1988, **Investor Growth Expectations: Analysts vs. History**, *The Journal of Portfolio Management*, Spring 1988, pp. 78 - 82

This paper updated the study by Cragg and Malkiel (1982), which suggests that the stock valuation process embodies analysts' forecasts rather than historically based growth figures such as the ten-year historical growth in dividends per share or the five-year growth in book value per share. (The Cragg and Malkiel study is based on data for the 1960s).

In this paper, the authors used data from 1971- 1983 for approximately sixty-five utility firms. They "found overwhelming evidence that the consensus analysts' forecasts of future growth is superior to historically oriented growth measures in predicting the firm's stock price." Their results "also are consistent with the hypothesis that investors use analysts' forecasts, rather than historically oriented growth calculations, in making stock buy-and-sell decisions." (p. 81)

Thomas Lys and Sungkyu Sohn, 1990, **The Association between Revisions of Financial Analysts' Earnings Forecasts and Security-Price Changes**, *Journal of Accounting and Economics*, vol. 13, pp. 341 - 363

Using virtually all publicly available analyst earnings forecasts for a sample of 58 companies in the 1980 - 86 period (over 23,000 individual forecasts by 100 analyst firms), the authors showed that stock returns responded to individual analyst earnings forecasts, even when they were closely preceded by earnings forecast made by other analysts or by corporate accounting disclosures.

Empirical studies have also been conducted showing that investors who rely primarily on data obtained from several large reputable investment research houses and security dealers obtain better results than those who do not[1]. Thus, both empirical research and common sense indicate that

[1]Examples of these studies include Stanley, Lewellen & Schlarbaum (1981) and Touche Ross Co. (1982).

investors rely primarily on analysts' growth rate forecasts rather than on historical growth rates alone.

See attached reference list.

Analyst Forecasts References

Brown. L.D. and Rozeff, M.S. "The Superiority of Analyst Forecasts as Measures of Expectations: Evidence from Earnings." *Journal of Finance,* March 1978, 1-16.

Cragg, J.G. and Malkiel, B.G. "Expectations and the Structure of Share Prices." National Bureau of Economic Research. Chicago: University of Chicago Press, 1982.

Cragg, J.G. and Malkiel, B.G. "The Consensus and Accuracy of Some Predictions of the Growth of Corporate Earnings." *Journal of Finance,* March 1968, 67-84.

Easterwood, J. C. and Nutt, S. R., "Inefficiency in Analysts' Earnings Forecasts: Systematic Misreaction or Systematic Optimism?" *Journal of Finance*, Vol. LIV, No. 5, 1999, pp. 1777-1797.

Elton, E.J., Gruber, M.J., and Gultekin, J. "Expectations and Share Prices." *Management Science,* September 1981, 975-981.

Fried, D. and Givoly, D., "Financial Analysts Forecasts of Earnings, A Better Surrogate for Market Expectations", *Journal of Accounting and Economics,* Vol. 4, 1982.

Harris, R. S., "Using Analysts' Growth Forecasts to Estimate Shareholder Required Rates of Return." *Financial Management*, Spring 1986, pp. 58 – 67.

Harris, R. S., and Marston, F. C., "The Market Risk Premium: Expectational Estimtaes Using Analysts' Forecasts," *Journal of Applied Finance*, 11:6-16, 2001.

Lys, T. and Sohn, S., "The Association between Revisions of Financial Analysts' Earnings Forecasts and Security-Price Changes," *Journal of Accounting and Economics*, vol. 13, 1990, pp. 341 – 363.

Moyer, R. C., Chatfield, R. E., and Kelley, G. D., "The Accuracy of Long-Term Earnings Forecasts in the Electric Utility Industry," *International Journal of Forecasting* Vol. I, 1985.

Stanley, L., Lewellen, W., and Schlarbaum, G. "Further Evidence on the Value of Professional Investment Research," *Journal of Financial Research,* Spring 1981, 1-9.

Timme, S.G. and Eiseman, P.C. "On the Use of Consensus Forecasts of Growth in the Constant Growth Model: The Case of Electric Utilities." *Financial Management,* Winter 1989, 23-35.

Touche Ross Co. "Proxy Disclosures and Stockholder Attitude Survey." Washington DC: National Association of Corporate Directors, May 1982.

Vander Weide, J.H. and Carleton, W. T. "Investor Growth Expectations: Analysts vs. History." *The Journal of Portfolio Management,* Spring 1988, 78-87.

CA-IR-202

Ref: T-17, page 39, lines 24-25

Please indicate if Dr. Morin is aware of any "evidence" that challenges the use of analysts' forecasts of earnings as an indicator of stock price performance and/or cost of capital estimation.

Dr. Morin's Response:

Some studies provide evidence that analysts make biased forecasts and misinterpret the impact of new information.[1] For example, several studies in the early 1990s suggest that analysts either systematically under-react or over-react to new information. Easterwood & Nutt (1999) discriminate between these different reactions and reported that analysts under-react to negative information, but over-react to positive information. The recent studies do not necessarily contradict the earlier literature. The earlier research focused on whether analysts' earnings forecasts are better at forecasting future earnings than historical averages, whereas the recent literature investigates whether the analysts' earnings forecasts are unbiased estimates of future earnings. It is possible that even if the analysts' forecasts are biased, they are still closer to future earnings than the historical averages, although this hypothesis has not been tested in the recent studies. One way to assess the concern that analysts' forecasts may be biased upward is to incorporate into the analysis the growth forecasts of independent research firms, such as Value Line, in addition to the analyst consensus forecast. Unlike investment banking firms and stock brokerage firms, independent research firms such as Value Line have no incentive to distort earnings growth estimates in order to bolster interest in common stocks.

Some argue that analysts tend to forecast earnings growth rates that exceed those actually

[1] Other relevant papers corroborating the superiority of analysts forecasts as predictors of future returns versus historical growth rates include: Fried & Givoly (1982), Moyer, Chatfield & Kelley (1985), and Gordon, Gordon & Gould (1989).

achieved and that this optimism biases the DCF results upward. The magnitude of the optimism bias for large rate-regulated companies in stable segments of an industry is likely to be very small. Empirically, the severity of the optimism problem is unclear for regulated utilities, if a problem exists at all. It is interesting to note that Value Line forecasts for utility companies made by independent analysts with no incentive for over- or understating growth forecasts are not materially different from those published by analysts in security firms with incentives not based on forecast accuracy, and may in fact be more robust. If the optimism problem exists at all, it can be circumvented by relying on multiple-stage DCF models that substitute long-term economic growth for analysts' growth forecasts in the second and/or third stages of the model.

See reference list attached to response to CA-IR-201.

CA-IR-203

Please identify and provide copy of any analyses used by Dr. Morin in deriving the 0.35% risk adjustment he adds to the cost of equity for the average risk electric utility in order to develop a 11.25% cost of equity for HELCO.

Dr. Morin's Response:

Dr. Morin adjusted the initial cost of equity of 10.9% based on the industry average upward by 35 basis points, raising the cost of equity from 10.9% to 11.25%, in order to reflect the Company's smaller size and weaker than average effective capital structure engendered by the debt-like purchased power contracts.

Dr. Morin notes that the Commission has recognized HELCO's higher relative risk on account of its small size. In Decision and Order No. 18365 in Docket No. 99-0207, the Commission agreed that a size adjustment is appropriate for HELCO on account of its smaller size, as demonstrated by its higher operating ratio, lower quality of earnings, and weak level of internally generated funds for construction. The Commission also expressed concern with the Company's substantial purchased power obligations.

An upward adjustment to the initial cost of common equity estimate based on an average risk electric utility is required to reflect the additional risk attributable to the Company's weaker than average capital structure engendered by the debt-like purchased power contracts. Since the capital structure difference amounts to about 5%, that is, 53% - 48% = 5%, the required upward adjustment to the cost of equity ranges from a minimum of 7.6 to a maximum of 13.8 basis points times 5, which equals 38-69 basis points, attesting to Dr. Morin's conservative adjustment of 35 basis points.

One can also examine utility bond yield spreads as a guide for the proper risk adjustment. Dr. Morin notes that at the time of preparing his testimony, yield spreads between A-rated and BBB-rated bonds was approximately 40 basis points.

A third framework to quantify the risk differential is based on the CAPM. Given the observed range in the betas of electric utilities, it is reasonable to state that on account of its small size and purchased power burden relative to other electric utilities, the Company's beta factor increases by 0.05. The CAPM formula can then be used to approximate the return (cost of equity) differences implied by the increase in beta. The basic form of the CAPM states that the return differential is given by the differential in beta times the excess return on the market, (R_M - R_F). The return differential implied by an increase in beta of 0.05 is given by 0.05 times the market risk premium (R_M - R_F). Using an estimate of 7% for (R_M - R_F), the return adjustment is 35 basis points.

Based on all these considerations and various frameworks, an increase of 35 basis points is not unreasonable in Dr. Morin's view.

CA-IR-204

Please provide copies of the following documents for Hawaiian Electric Industries, Inc. and/or Hawaiian Electric Company:

a. 2005 Statistical Supplement to Annual Report;

b. Prospectus for most recent public offering of common stock;

c. Prospectus for most recent public offering of long-term debt; and

d. Prospectus for most recent public offering of preferred stock or hybrid securities.

HELCO Response:

The requested information is voluminous and is available for inspection at HECO's Regulatory Affairs Division office, Suite 1301, Central Pacific Plaza, 220 South King Street, Honolulu, Hawaii. Please contact Dean Matsuura at 543-4622 to make arrangements to inspect the requested information:

a. 2005 Statistical Supplement to the Annual Report;

b. Prospectus Supplement for Hawaiian Electric Industries, Inc. (HEI) most recent public offering of 2,000,000 shares of Common Stock;

c. Prospectus for Hawaiian Electric Industries, Inc. (HEI) $300,000,000 Medium-Term Notes, Series D and the Pricing Supplement No. 4 dated August 3, 2006, and the Prospectus for Hawaiian Electric Company, Inc. $47,000,000 Special Purpose Revenue Bonds, Refunding Series 2005A; and

d. Prospectus for Hawaiian Electric Company, Inc. most recent public offering of Preferred Securities, Series 2004 QUIPS. Please note that Hawaiian Electric Industries, Inc. (HEI) does not have any public offering of preferred stock or hybrid securities outstanding. However, HEI did have a hybrid security that was fully redeemed on 4/16/04.

CA-IR-205

Please provide copy of all reports prepared by rating agencies that describe Hawaiian Electric Industries, Inc. and/or Hawaiian Electric Company for the period 2001 to the present.

HELCO Response:

Please refer to HECO's responses filed in CA-IR-102 and CA-RIR-6 of Docket No. 04-0113 (HECO's 2005 Test Year Rate Case) for the available reports prepared by rating agencies for the period 2001 to 2004. The requested information for the available reports for the period 2005 to the present is voluminous and is available for inspection at HECO's Regulatory Affairs Division office, Suite 1301, Central Pacific Plaza, 220 South King Street, Honolulu, Hawaii. Please contact Dean Matsuura at 543-4622 to make arrangements to inspect the requested information.

Note: Most (if not all) of the information requested is copyrighted. The copies are being provided under the "fair use" exception to the copyright laws. Any copies made of the requested information are subject to the copyright laws.

The requested information for the available reports for the period 2005 to the present is voluminous and is available for inspection at HECO's Regulatory Affairs Division office, Suite 1301, Central Pacific Plaza, 220 South King Street, Honolulu, Hawaii. Please contact Dean Matsuura at 543-4622 to make arrangements to inspect the requested information.

CA-IR-206

Please provide copy of all reports prepared by security analysts that describe Hawaiian Electric Industries, Inc. for the period 2001 to the present.

HELCO Response:

Please refer to HECO's responses filed in CA-IR-103 and CA-RIR-7 of Docket No. 04-0113 (HECO's 2005 Test Year Rate Case) for the reports prepared by security analysts that evaluate HEI for the period 2001 to 2004. The requested information for reports by security analysts that describe HEI for the period 2005 to the present that we are aware of is voluminous and is available for inspection at HECO's Regulatory Affairs Division office, Suite 1301, Central Pacific Plaza, 220 South King Street, Honolulu, Hawaii. Please contact Dean Matsuura at 543-4622 to make arrangements to inspect the requested information.

Note: Most (if not all) of the information requested is copyrighted. The copies are being provided under the "fair use" exception to the copyright laws. Any copies made of the requested information are subject to the copyright laws.

The requested information is voluminous and is available for inspection at HECO's Regulatory Affairs Division office, Suite 1301, Central Pacific Plaza, 220 South King Street, Honolulu, Hawaii. Please contact Dean Matsuura at 543-4622 to make arrangements to inspect the requested information.

CA-IR-207

Please provide a schedule that shows the capital structures for Hawaiian Electric Industries, Inc. (consolidated), Hawaiian Electric Company, Maui Electric Company, and Hawaii Electric Light Company for the period 2001 – 2005 and for the test period in this proceeding.

HELCO Response:

Please refer to HECO's responses filed to CA-IR-101, 492, and 494 in Docket No. 04-0113 (HECO's 2005 Test Year Rate Case) for the 2001-2004 information being requested. See page 3 attached for the 2005 capital structures for Hawaiian Electric Industries, Inc. (consolidated), Hawaiian Electric Company (HECO), Maui Electric Company (MECO), and Hawaii Electric Light Company (HELCO), and page 4 attached for the 2006 forecast for HECO, MECO, and HELCO.

HELCO objects to providing the 2006 forecast capital structures for HECO, MECO, and HELCO, except under protective order. The information on page 4 of this response is confidential and will be provided pursuant to Protective Order No. 22593, dated June 30, 2006. [The financial information is privileged commercial and financial information, and the unprotected disclosure of the information could trigger broader release of the information. For that reason, forecast information included in the exhibits filed with the Companies' Application for Approval of Issuance of Unsecured Obligations and Guarantees in Docket No. 05-0330 was filed on January 13, 2006 pursuant to Protective Order No. 22718 (January 12, 2006). The 2006 forecast capital structure for HECO Consolidated is presented in the 2005 Statistical Supplement and Utility Forecast, which the Consumer Advocate has requested in CA-IR-204.]

HELCO objects to providing the requested forecast capital structures for Hawaiian Electric Industries, Inc. (consolidated) for 2006, even under protective order, on the grounds that:

(1) The requested information is privileged commercial and financial information, which is maintained by HEI and its subsidiaries as non-public, confidential information.

(2) The disclosure of HEI forecast information from which income and earnings information (such as retained earnings) could be derived, could trigger requirements under the rules and guidelines of the Securities and Exchange Commission and/or the New York Stock Exchange that information that would be meaningful to an investor (such as earnings estimates) be released to all investors, if the information is disclosed beyond a limited number of "insiders". Forecasts of earnings, etc. are the types of information that, if selectively released, could violate such requirements.

(3) Such information is not relevant to this docket. While HEI is the parent of HECO, which is HELCO's parent, the Commission generally has ruled that HEI, as a diversified holding company, is not an appropriate proxy for HECO or its utility subsidiaries in determining their cost of capital. (See Decision and Order No. 11317 in Docket No. 6531 (HECO's 1990 Test Year) and Decision and Order No. 10993 in Docket No. 6432 (HELCO's 1990 Test Year).)

(4) HELCO is providing the forecast utility information that HECO and its subsidiaries are required to provide under the Commission's rules. (The Commission's rules specify where five-year utility forecasts are required.) In accordance with the Commission's rules, the utilities provide the Commission and the CA with five-year capital expenditures estimates each December (see the 2006 Capital Expenditures Budget filed with the Commission on December 30 ,2005), and provide five-year financing plans in financing dockets (unless the requirement is waived). See Exhibits 3-7 filed January 13, 2006 in Docket No. 05-0330 pursuant to Protective Order No. 22718 (January 12, 2006).

For Year Ended December 31, 2005
Capital Structure Ratios

Year ended December 31, 2005	HEI	HECO	HELCO	MECO
Short-term borrowings	5.6%	7.3%	13.2%	0.0%
Hybrids	0.0%	2.4%	2.7%	2.8%
Long-term debt	45.1%	36.0%	32.1%	40.7%
Preferred stock	1.4%	1.8%	1.9%	1.4%
Common equity	48.0%	52.5%	50.2%	55.0%
	100.0%	100.0%	100.0%	100.0%

Supporting Data for Capital Structure Ratios
($ in thousands)

Years ended December 31, 2005	HEI	HECO *	HELCO	MECO
Short-term borrowings	$ 141,758	$ 91,715	$ 49,700	$ -
Hybrids	0	30,000	10,000	10,000
Long-term debt	1,142,993	449,586	121,009	143,852
Preferred stock	34,293	22,293	7,000	5,000
Common equity	1,216,630	655,544	189,407	194,190
	$ 2,535,674	$ 1,249,138	$ 377,116	$ 353,042

* Note: HECO's hybrids and long-term debt excludes $1,546K, which represents HECO's capital investment in HECO Capital Trust III. See HECO T-21, page 36, in Docket No. 04-0113.

Source: Hawaiian Electric Industries, Inc. Form 10-K for the fiscal year ended December 31, 2005, page 95 and Form 8-K dated March 7, 2006, page 33.

THIS PAGE LEFT INTENTIONALLY BLANK.

CA-IR-208

Please provide a schedule that shows the segment information for Hawaiian Electric Industries, Inc. for each year 2001 – 2005.

HELCO Response:

For the requested schedule showing the segment information for Hawaiian Electric Industries, Inc. please refer to the Hawaiian Electric Industries, Inc. 2002 Annual Report to Stockholders, Appendix A, page 51 for the year 2001 and 2002, and the Hawaiian Electric Industries, Inc. 2005 Annual Report to Shareholders, Appendix A, page 65 for the year 2003-2005, which was previously filed with the PUC on March 24, 2003 and April 13, 2006, respectively, which the Division of Consumer Advocacy also received a copy.

CA-IR-209

Please identify any methodological or data changes, except for the time frame of information contained in the capital structure and/or cost rates of fixed cost components, of HELCO's current application.

HELCO Response:

HELCO's calculation of the capital structure and capital costs is consistent with the methodology HELCO used in calculating the capital structure and capital costs in HELCO 2000 test year rate case (Docket No. 99-0207) which the Commission approved; however, in the HELCO 2000 test year rate case, hybrid securities and preferred stock were combined in the capital structure summary, and taxable debt was not part of the capital structure. In this rate proceeding (HELCO 2006 test year rate case), the hybrid securities and the preferred stock are shown separately, and the long-term debt is separated between revenue bonds and the forecast issuance of taxable debt in the HELCO's capital structure.

HELCO's calculation of the capital structure and capital costs is consistent with the methodology HECO used in calculating the capital structure and capital costs in HECO 2005 test year rate case (Docket No. 04-0113) which final decision is still pending with the Commission; however, in the HECO 2005 test year rate case, the long-term debt was not separated between revenue bonds and taxable debt, since the issuance of taxable debt was not contemplated at the time of HECO's filing.

Please note that the Company has a pending financing application before the PUC and is currently considering amending the PUC financing application (Docket No. 05-0330 filed on December 29, 2005) in order to issue special purpose revenue bonds instead of issuing the taxable unsecured notes. Any changes in financing with respect to this forecast long-term debt issuance and associated costs will be reflected in Rebuttal Testimony.

CA-IR-210

Please provide a schedule that shows the various security ratings of HEI, HECO, and HELCO for each year 2001 to the present.

HELCO Response:

Please refer to pages 2 to 4 of the response to CA-IR-104 filed in Docket No. 04-0113 (HECO's 2005 Test Year Rate Case) for rating information for HEI, HECO, and HELCO. An update to the HEI, HECO, and HELCO rating information is that on 4/22/05 S&P's outlook for HEI, HECO, and HELCO's securities was revised to negative from stable.

The requested information is voluminous and is available for inspection at HECO's Regulatory Affairs Division office, Suite 1301, Central Pacific Plaza, 220 South King Street, Honolulu, Hawaii. Please contact Dean Matsuura at 543-4622 to make arrangements to inspect the requested information.

CA-IR-212

Please provide a schedule that shows the "Financial Ratios", computed consistent with those in HELCO-1818, using HELCO's proposed capital structure and fixed cost rates, along with return on equity scenarios of 10.0%, 10.25%, 10.75%, and 11.0%.

HELCO Response:

HELCO did not compute financial ratios at the various return on equity scenarios of 10.0%, 10.25%, 10.75%, and 11.0% being requested.

CA-IR-213

Ref: T-19, page 4, line 19, Energy Charges vs. Marginal Cost.

According to Mr. Oran's testimony, "The design should promote efficient consumption. This means that the energy charge should track the marginal cost of providing that energy." Please state whether and quantify the extent to which Mr. Oran's/HELCO's proposed inclining block residential rates are believed to "track the marginal cost" incurred by HELCO to provide that energy, with reference to specific cost study information relied upon (if any).

HELCO Response:

Dr. Orans' statement refers to a generally accepted criterion for rate design. At the time of Dr. Oran's preparation of his testimony, HELCO did not have an updated marginal cost study for Dr. Orans to review; the last study was for HELCO's 1999 rate case. Hence, Dr. Orans cannot quantify the extent to which the inclining block rates track marginal costs.

HELCO's new construction and expansion costs, as indicated in HELCO's response to CA-IR-214, are driven by load growth, the bulk of which is due to large new homes and to a lesser extent, increased consumption of existing customers. An inclining block rate structure offers a price signal that is more reflective of the incremental costs imposed by load growth than the current flat rate at which all customer energy usage is priced identically.

CA-IR-214

Ref: T-19, page 6, line 3.

According to Mr. Oran's testimony, "HELCO's rising cost of service is mainly due to the demand growth caused by new housing development." Please provide reference to, or copies of, all studies, reports, analyses and other information relied upon in making this statement.

HELCO Response:

This statement is based on discussions between Dr. Orans and HELCO and HECO staff regarding HELCO's construction activities and expansion requirements. The strong residential demand growth is documented in HELCO's June 2006 forecast report, to be provided under separate cover as stated in HELCO's response to CA-IR-22. Specifically, Table C-RS1 documents the rise in residential new construction since 1997. Also, the "Economic Outlook for Hawaii County", by University of Hawaii Economic Research Organization, dated May 15, 2006, discusses the residential construction market on the Big Island, and is included in HELCO's June 2006 forecast report.

HELCO's engineers and planners also conveyed that new housing generally has higher average electrical use than the older existing residences, mainly because new homes have more square-footage and larger air-conditioners. Trends in residential energy usage are documented in the June 2006 forecast report which indicates that the consumption per residential customer account has been rising, consistent with new customers having higher consumption than existing customers.

CA-IR-215

Ref: T-19, page 6, line 12, Big Island income disparity.

According to Mr. Oran's testimony, "The Big Island has a wide gap between lowest and highest income electricity consumers." Please state whether Mr. Oran's believes that this "gap" is wider on the Big Island than in other areas and provide reference to, or copies of, all studies, reports, analyses and other information relied upon in making this statement.

HELCO Response:

The statement only refers to the income gap in the island of Hawaii. It does not consider whether this income gap is wider than those in other areas.

In response to this IR, however, the following figure shows the 2001 income gaps by area. This figure indicates that except for the Puna area of the Big Island, and Molokai, the island of Hawaii has relatively more households with income below $25K than the other islands.

Figure A- 8: Household Income

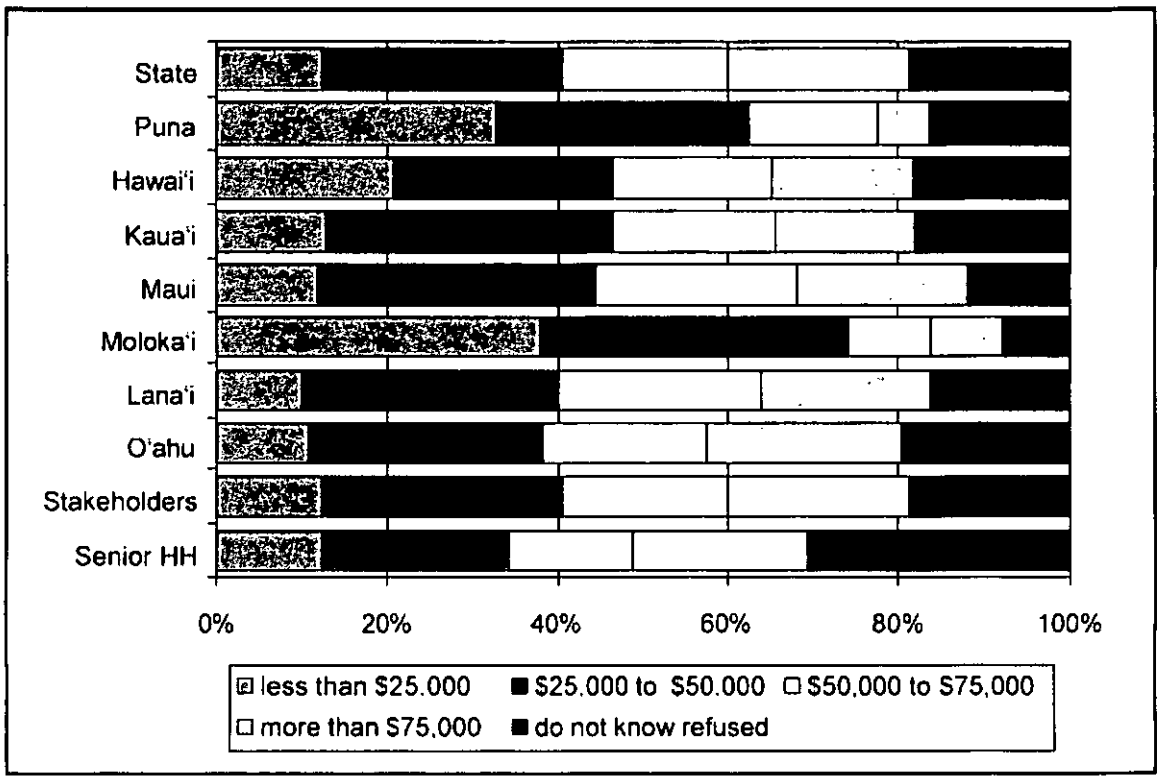

Source: Page A.5 of Hawai'i Statewide Transportation Plan Telephone Survey, available at http://www.hawaii.gov/dot/stp/appendix-k.pdf

CA-IR-216

Ref: T-19, page 11, line 20, 47% of costs are fixed.

According to Mr. Oran's testimony, "According to HELCO's latest cost of service study, approximately 47% of HELCO's total costs do not vary with kWh sales." Please provide reference into the specific HELCO cost of service exhibits/workpapers where this 47% value is derived, indicating whether marginal or embedded costs are being referenced.

HELCO Response:

The 47% value is based on the Class Rates of Return on Rate Base at Present Rates table reproduced on the next page (HELCO-WP-2001). Developed by HELCO for Test Year 2006 Docket No. 05-0315, the table reflects average (embedded) costs. Specifically, the 47% value is (a) total operating expenses (126,867.8) less the fuel and purchased power expenses (67,910.5) for residential service, divided by (b) the total operating expenses (126,867.8) for residential service.

HAWAII ELECTRIC LIGHT COMPANY, INC.
TEST YEAR 2006, DOCKET NO. 05-0315 DIRECT
CLASS RATES OF RETURN ON RATE BASE AT PRESENT RATES

	RESIDENTIAL SERVICE R	GEN SERV NON-DMD G	GEN SERV DEMAND J	COMMERCIAL SERVICE H	LARGE POWER P	STREET LIGHTING F	TOTAL SYSTEM
REVENUES							
SALES REVENUE	129,577.5	33,909.0	95,527.2	4,805.7	58,114.9	1,249.9	323,184.2
OTHER OPERATING REVENUE	601.5	72.8	92.0	11.7	126.2	0.2	904.4
TOTAL OPERATING REVENUE	130,179.0	33,981.8	95,619.2	4,817.4	58,241.1	1,250.1	324,088.6
EXPENSES							
FUEL AND PURCHASED POWER	67,910.5	15,285.3	55,221.3	2,642.7	36,426.9	686.3	178,213.0
OTHER PRODUCTION COSTS	17,223.7	3,616.9	12,587.1	643.2	6,696.3	203.0	40,970.2
TRANSMISSION	1,009.5	212.0	737.7	37.7	392.5	11.9	2,401.3
DISTRIBUTION	4,165.9	931.2	1,087.5	67.9	354.8	20.4	6,598.0
CUSTOMER ACCOUNTS	2,482.9	550.0	125.5	14.7	5.8	6.7	3,185.6
UNCOLLECTIBLES	290.9	65.9	31.0	0.0	0.0	0.0	387.8
CUSTOMER SERVICE	1,463.5	337.7	45.0	45.0	360.3	0.0	2,251.6
ADMIN AND GENERAL	5,907.2	1,259.2	3,298.9	182.6	1,767.9	54.7	12,470.6
WAGE ROLLBACK	0.0	0.0	0.0	0.0	0.0	0.0	0.0
TOTAL OPERATING & MAINT EXPENSE	100,454.1	22,228.3	73,134.4	3,673.9	46,034.4	982.9	246,478.1
DEPRECIATION EXPENSE	15,673.0	3,497.5	6,601.0	373.2	3,114.4	115.7	29,374.0
TAXES OTHER THAN INCOME TAXES	12,329.6	3,184.2	8,852.8	448.5	5,360.6	117.2	30,292.9
INCOME TAXES	-1,350.4	1,580.8	1,781.4	71.6	1,017.0	-4.1	3,098.2
AMORTIZED INVESTMENT TAX CREDIT	-265.3	-63.0	-113.2	-6.4	-51.1	-2.0	-501.0
GAIN ON SALE OF PROPERTY	0.0	0.0	0.0	0.0	0.0	0.0	0.0
INTEREST ON CUSTOMER DEPOSITS	26.8	6.6	14.5	0.8	6.9	0.2	55.8
TOTAL OPERATING EXPENSES	126,867.8	30,434.7	90,271.9	4,561.4	55,452.3	1,210.0	308,798.1
PRESENT RETURN	3,311.2	3,547.1	5,347.3	255.9	2,786.8	40.1	15,290.5
RATE BASE							
GROSS PLANT IN SERVICE	427,247.5	97,205.1	173,392.4	9,890.6	78,967.7	3,056.7	789,780.0
DEPRECIATION BALANCE	-187,956.4	-40,472.2	-67,177.8	-3,588.4	-30,293.1	-1,235.5	-331,323.5
NET PLANT IN SERVICE	239,291.1	56,732.9	106,214.6	6,302.2	48,564.6	1,821.2	458,656.5
PROPERTY HELD FOR FUTURE USE	27.1	5.7	19.8	1.0	10.5	0.3	64.5
FUEL INVENTORY	3,149.9	709.0	2,561.3	124.4	1,689.6	31.8	8,266.[illegible]
MATERIALS AND SUPPLIES	1,726.7	356.5	668.7	37.6	319.3	12.1	3,121.0
WORKING CASH	198.7	201.6	630.8	31.5	412.1	8.0	2,192.8
CONTRIBUTIONS & ADVANCES	-60,014.8	-12,172.6	-10,679.7	-712.8	-3,244.3	-237.9	-86,462.5
DEFERRED INCOME TAXES	-13,160.9	-3,103.3	-5,757.2	-325.9	-2,625.9	-99.7	-24,972.0
UNAMORT INVEST TAX CREDITS	-6,169.1	-1,465.8	-2,719.3	-152.9	-1,240.3	-46.6	-11,795.[illegible]
OTHER RATE BASE DEDUCTIONS	13,033.0	2,963.9	5,257.4	300.2	2,391.8	92.8	24,039.0
TOTAL RATE BASE	178,881.7	44,227.9	96,796.5	5,304.3	46,307.0	1,563.0	373,100.4
RATE OF RETURN (%)	1.85%	8.02%	5.52%	4.83%	6.02%	2.53%	4.10%
ROR AS % OF SYSTEM ROR	45.17%	195.70%	134.80%	117.74%	146.95%	61.84%	100.00%

CA-IR-217

Ref: T-19, page 17, Table 4a, Rate Design – High Cost Utilities.

Please provide the rate schedule page (energy rates and customer/minimum charges) of the residential tariffs reviewed by Mr. Orans for the "50 high-cost utilities" included in his survey.

HELCO Response:

Please see the attached sheet for a list of internet references to the 50 residential rate schedules.

The electronic file provided in response to CA-IR-218 contains the internet links to these schedules.

Utility Name	Source
Kauai Island Utility Cooperative	http://www.kiuc.coop/pdf/ratedata_02_06.pdf
Long Island Power Authority	http://www.lipower.org/pdfs/residential/resirates.pdf
Fitchburg Gas & Electric Light Co	http://services.unitil.com/fge/myunitilrates.asp?rate=fgeR1Electric_1
Commonwealth Electric Co	http://www.selectenergy.com/regions/MA.aspx
Orange and Rockland Utils Inc	http://www.oru.com/documents/tariffsandregulatorydocuments/ny/electrictariff/electricSC01.pdf
Niagara Mohawk Power Corp	http://www.nationalgridus.com/niagaramohawk/home/rates/4_standard.asp
New York State Elec & Gas Corp	http://www.nyseg.com/nysegweb/webcontent.nsf/residential/UnderstdYourBill
New Hampshire Elec Coop Inc	http://www.nhec.com/filerepository/schedule_of_fees_charges_rates_rates_jan_1_2006_inet_1.pdf
Public Service Co of NH	http://www.psnh.com/SharePDFs/Summary_Of_Rates.pdf
Granite State Electric Co	http://www.nationalgridus.com/granitestate/home/rates/4_d.asp
Vermont Electric Cooperative, Inc	http://www.vtcoop.com/PageViewer.aspx?PageName=Rates%20Summary
Central Vermont Public Srvc Corp	http://www.cvps.com/rates/residential_rates.shtml
Green Mountain Power Corp	http://www.gmpvt.com/elect_construct/rate01_e.pdf
Boston Edison Co	http://www.nstaronline.com/ss/customer_service/rates/rates.asp#A1
Southern California Edison	http://www.sce.com/NR/rdonlyres/64824421-2531-4E4E-8668-CCA1AF0C6829/0/RESbill_ex.pdf
Pacific Gas & Electric	http://www.pge.com/res/financial_assistance/medical_baseline_life_support/understanding/index.html#topic4
El Paso Electric Co	http://www.epelectric.com/internetsite/home.nsf/f5a02237b9a921f087256bc6005e40cf/c294bd81bd71a28287256bc60064929a/$FILE/01rate.pdf
Homer Electric Association Inc	http://www.homerelectric.com/About/Current%20Rates.htm
Chugach Electric Association, Inc	http://www.chugachelectric.com/customer/rate_info.html
Golden Valley Elec Association	http://www.gvea.com/memsery/rates.php
Modesto Irrigation District	http://www.mid.org/services/tariffs/rates/ums-d-residential.pdf
City of Los Angeles	http://www.ladwp.com/ladwp/cms/ladwp005652.pdf
Turlock Irrigation District	http://www.tid.org/Publisher_PDFs/DE.pdf
Sacramento Municipal Util Dist	http://www.smud.org/commercial/rate_schedules/1-R-1thru5.pdf
Cleveland Electric Illum Co	http://www.firstenergycorp.com/customercare/cache/_65256A170068279F_la_CE+Current_file_CEI_2006_PUCO_No13.pdf
Toledo Edison Co	http://www.firstenergycorp.com/customercare/cache/_65256A170068279F_la_TE+Current_file_TE_2006_PUCO_No8.pdf
Trico Electric Coop Inc	http://www.trico.org/index_frames.htm
Arizona Public Service So	https://www.aps.com/my_account/RateComparer.html
Tampa Electric Co	http://www.tampaelectric.com/pdf/TEHMYourElecBill.pdf
Rappahannock Electric Coop	http://www.mvrec.coop/ClientDoc/Schedule%2Epdf
Dominion Virginia Power	http://www.dom.com/customer/pdf/va/varb1.pdf
Cheyenne Light Fuel & Power Co	http://www.cheyennelight.com/images/ElectricRates.pdf
Central Illinois Light Co	https://www2.ameren.com/ACMSContent/Rates/Rates_cilert1.pdf
Union Electric Co	https://www2.ameren.com/ACMSContent/Rates/Rates_umbe28rt1M.pdf
Jersey Central Power & Lt Co	http://www.firstenergycorp.com/customerchoice/cache/_85256A1D005AF389_la_2005+NJ+PTC+(normal+accounts)_file_2005+Jul.1+-+JCPL+price+to+Compare+(normal+accts)+rev7-01-05.pdf
Sierra Pacific Power	http://www.sierrapacific.com/services/brochures_arch/rate_schedules/spp_nv_resrates.pdf
Atlantic City Electric Co	http://www.atlanticcityelectric.com/_res/documents/NJRates1205Res.pdf
Western Massachusetts Elec Co	http://www.wmeco.com/programs/rates/default.asp#monthly
Groton Department of Utilities	http://www.grotonutilities.com/electric_rates.asp
Town of Reading	http://www.rmld.com/resi/schedA.htm
Town of Holyoke	http://www.hged.com/166E.pdf
Matanuska Electric Assn Inc	http://www.matanuska.com/members/rates.pdf
Wisconsin Public Service Corp	http://www.wisconsinpublicservice.com/home/wielecrate.asp
Nebraska Public Power District	http://www.nppd.com/My_Account/Additional_Files/rates/residentialservice.pdf
Tucson Electric Power Co	http://www.tucsonelectric.com/Home/Programs/PricingPlans/PricingPlanSummary.asp
Detroit Edison Co	http://my.dteenergy.com/myAccount/residentialRates.do
Dayton Power & Light Co	http://www.waytogo.com/ca/cart/D17.pdf
Potomac Electric Power Co	http://www.pepco.com/_res/documents/md_schedule-r-2005.pdf
Mississippi Power Co	http://www.southerncompany.com/mspower/pricing/mpc-pdf/R-48.pdf
Portland General Electric	http://www.portlandgeneral.com/about_pge/regulatory_affairs/pdfs/schedules/sched_7.pdf

CA-IR-218

Ref: T-19, page 19, Figure 2, Histogram of monthly customer charges.

Please provide an electronic file and hard copy of the source data used to compile the Histogram of monthly customer charges. The electronic spreadsheet files should have all cell formulae and file links intact and not converted to values.

HELCO Response:

See the attached sheet and the associated electronic file.

			49	Count	
New Hampshire Elec Coop Inc	$20.00	0	45	4	<$2.50
Mississippi Power Co	$16.50	2.5	32	13	$2.50-$4.99
Golden Valley Elec Association	$15.00	5	24	8	$5.00-$7.49
Niagara Mohawk Power Corp	$14.92	7.5	13	11	$7.50-$9.99
New York State Elec & Gas Corp	$13.16	10	6	7	$10.00-12.49
Nebraska Public Power District	$13.00	12.5	0	6	>$12.50
Modesto Irrigation District	$12.50	20			
Kauai Island Utility Cooperative	$12.16				
Trico Electric Coop Inc	$12.00				
Homer Electric Association Inc	$11.00				
Turlock Irrigation District	$11.00				
Cheyenne Light Fuel & Power Co	$11.00				
Central Vermont Public Srvc Corp	$10.92				
Rappahannock Electric Coop	$10.00				
Portland General Electric	$10.00				
Vermont Electric Cooperative, Inc	$9.69				
Groton Department of Utilities	$9.14				
Green Mountain Power Corp	$9.01				
Orange and Rockland Utils Inc	$8.54				
Western Massachusetts Elec Co	$8.53				
Tampa Electric Co	$8.50				
Chugach Electric Association, Inc	$8.42				
Wisconsin Public Service Corp	$8.00				
Arizona Public Service So	$7.59				
Public Service Co of NH	$7.36				
Union Electric Co	$7.25				
City of Los Angeles	$7.00				
Dominion Virginia Power	$7.00				
Boston Edison Co	$6.43				
El Paso Electric Co	$5.94				
Matanuska Electric Assn Inc	$5.65				
Long Island Power Authority	$5.37				
Sacramento Municipal Util Dist	$5.00				
Tucson Electric Power Co	$4.90				
Cleveland Electric Illum Co	$4.75				
Toledo Edison Co	$4.75				
Granite State Electric Co	$4.72				
Town of Holyoke	$4.46				
Pacific Gas & Electric	$4.41				
Dayton Power & Light Co	$4.25				
Sierra Pacific Power	$4.00				
Central Illinois Light Co	$3.52				
Town of Reading	$3.20				
Fitchburg Gas & Electric Light Co	$3.02				
Commonwealth Electric Co	$2.84				
Atlantic City Electric Co	$2.48				
Jersey Central Power & Lt Co	$2.18				
Potomac Electric Power Co	$1.99				
Southern California Edison	$0.87				
Detroit Edison Co					

CA-IR-219

Ref: T-19, page 22, Figure 3, Average Monthly Residential Usage Chart.

Please provide an electronic file and hard copy of the source data used to compile the Histogram of monthly customer charges. The electronic spreadsheet files should have all cell formulae and file links intact and not converted to values.

HELCO Response:

The subject line of this IR refers to a chart of average monthly residential usage levels. However, the body of the question refers to customer charges. Hence, HELCO assumes that this IR is for average residential usage because the body of the question is the same as the one in CA-IR-218. The electronic file spreadsheet for HELCO T-19, page 22, Figure 3 is provided. HELCO is not including a hard copy printout of the electronic file spreadsheet in this response because the data would require 921 pages to print and all data is available in the electronic spreadsheet.

CA-IR-220

Ref: T-19, page 28, line 10, Industry Standard Rate Design.

According to Mr. Oran's testimony, "Indeed, HELCO's proposed design is becoming the industry standard for high cost utilities, particularly those in high cost locations where it is costly to build new infrastructure." Please state whether Mr. Orans believes that both the proposed inclining block rate structure and the HELCO-proposed minimum bill approach are "becoming the industry standard" and provide complete copies of all information beyond the data presented in testimony (if any) that is relied upon in support of this belief.

HELCO Response:

A. Inclining block rate structure.

The statement is based on the rate survey in Mr. Oran's testimony (pp.14-19). Additional support for this statement is the industry's movement towards inclining block rates, reflecting Section 111(d) the 1978 Public Utility Regulatory Policies Act:

> (d) ESTABLISHMENT.—The following Federal standards are hereby established:
>
> (1) COST OF SERVICE.—Rates charged by any electric utility for providing electric service to each class of electric consumers shall be designed, to the maximum extent practicable, to reflect the costs of providing electric service to such class, as determined under section 115 (a).
>
> (2) DECLINING BLOCK RATES.—The energy component of a rate, or the amount attributable to the energy component in a rate, charged by any electric utility for providing electric service during any period to any class of electric consumers may not decrease as kilowatt-hour consumption by such class increases during such period except to the extent that such

utility demonstrates that the costs to such utility of providing electric service to such class, which costs are attributable to such energy component, decrease as such consumption increases during such period.

(3) TIME-OF-DAY RATES.—The rates charged by any electric utility for providing electric service to each class of electric consumers shall be on a time-of-day basis which reflects the costs of providing electric service to such class of electric consumers at different times of the day unless such rates are not cost-effective with respect to such class, as determined under section 115 (b).

Section 111(d.1) establishes the Federal standards for setting rates to track cost of service.

Section 111(d.2) discourages declining block rate designs.

PURPA [Section 111(d.3)] encourages cost-effective implementation of time-of-day (TOD) rates. In response to PURPA, TOD pricing experiments were conducted in the late 1970s and early 1980s.[1] However, mandatory TOD pricing for residential customers is not a common practice because of high metering costs and low customer acceptance. As a result, residential TOD rates are typically implemented as optional rates, as done by HELCO.

B. Minimum bill

The minimum bill portion of the statement is based on the survey result that 49 of the 50 high-cost utilities surveyed have monthly customer charges (T-19, page 18, line 6). A customer charge is a form of minimum bill because a customer must pay the customer charge, even if the customer has zero consumption.

[1] Aigner, D.J. (1985) "The residential electricity time-of-use pricing experiments: what have we learned?" in J.A. Hausman and D.A. Wise (editors) Social Experimentation, University of Chicago Press, pp. 11-53.

CA-IR-221

Ref: T-20, page 4, Miscellaneous Revenues.

Please provide the following information regarding the $904,400 of test year miscellaneous revenues at present rates:

a. Provide quantity-times-price calculations supporting each element of miscellaneous charge revenues, totaling to the stated amount.
b. Explain all work done to determine that no changes should be made to any miscellaneous service prices.
c. Provide a comparison of HELCO's existing miscellaneous service prices to current HECO prices.
d. Explain any known cost differences or other reasons why HELCO miscellaneous service prices should be different than HECO prices.
e. Provide a comparison of HELCO's existing miscellaneous service prices to current MECO prices.
f. Explain any known cost differences or other reasons why HELCO miscellaneous service prices should be different than MECO prices.
g. Provide complete copies of all cost of service analyses HELCO has prepared to evaluate the costs incurred to provide each of the miscellaneous services, as available.

HELCO Response:

a. See HELCO-WP-710 for the supporting calculations for the $904,400 of test year miscellaneous revenue at present rates.

b. There was no work done to determine that no changes should be made to any miscellaneous service prices.

c.

	HELCO	HECO	MECO
Service Establishment Charge	$15.00	$15.00	$15.00
Reconnection Charge	$10.00	$10.00	$10.00
Returned Check Charge	$15.00	$7.50	$10.00
Field Collection Charge	$15.00	$15.00	$15.00
Late Payment Charge	1%	1%	1%
Late Payment Charge OCARS	0.83%	0.83%	0.83%

In Docket No. 04-0113, HECO has proposed to modify the Returned Checks Charge to a Returned Payment Charge at $16.00 per returned check or returned payment, increase the Field Collection Charge to $20.00 for a field call, increase the Service Establishment Charge to $20.00 for each establishment, and increase the Reconnection Charge to $25.00 per request, based on cost studies provided in that docket. The Consumer Advocate and the Department of Defense did not object to the proposed increases.

d. The cost differences are not known, so the difference between HELCO's and HECO's Returned Check Charge cannot be explained based on cost. See also HELCO's response to part (b) above.

e. See HELCO's response to part c above.

f. The cost differences are not known, so the difference between HELCO's and MECO's Returned Check Charge cannot be explained based on cost. See also HELCO's response to part (b) above.

g. See HELCO's response to part (b) above.

CA-IR-222

Ref: T-20, page 6, lines 7, Application of Guidelines.

Please explain how the proposed "100% of the system average increase of 9.25%" for rate schedules R, G and H is believed to be consistent with the stated "guidelines", given the cost of service results shown in HELCO-2001.

HELCO Response:

The proposed rate increase of 9.25% for Schedules R, G, and H is consistent with the guideline described in HELCO T-20, page 5, lines 17-20, "The proposed allocation follows the guidelines applicd in previous dockets, to allocate the proposed revenue increase to rate classes such that each class would move closer to cost of service, as reflected by each class's rate of return moving closer to the system average rate of return." This is illustrated in the ROR Index values shown in HELCO-2001. The ROR index shows each class's rate of return as a percentage of the system average rate of return. The ROR index for Schedule R at present rates is 45%; at proposed rates, the ROR index for Schedule R is 65%. The ROR index for Schedule G at present rates is 196%; at proposed rates, the ROR index for Schedule G is 140%. The ROR index for Schedule H at present rates is 118%; at proposed rates, the ROR index for Schedule H is 111%. The proposed rate increases for Schedules R, G, and H move each class's respective rate of return closer to the system average rate of return, which is consistent with the guideline.

CA-IR-223

Ref: T-20, page 8, Functionalization of Costs.

Please provide complete copies of all workpapers or electronic spreadsheets and other data provided by HELCO accounting personnel that were used to functionalize test year rate base and expense elements, to the extent not already included in prefiled workpapers. Please ensure that the workpapers set forth all calculations, state all assumptions, and explain the basis for such assumptions. In addition please ensure that the electronic spreadsheets have all cell references, links to files, and formula intact and not converted to values.

HELCO Response:

See the attached sheets and the accompanying electronic file.

HAWAII ELECTRIC LIGHT COMPANY, INC.
DOCKET NO. 05-0315 TEST YEAR 2006

WEIGHTING FACTORS FOR PRI LINE COSTS

Rate	Phase	Wt.	Test Year 2006 Number of Bills Pri	Sec	Total	Weighted No. of Bills	C1 Fct
R	1	1	-	736,476	736,476	736,476	1.00
G	1	1	-	103,078	103,078	103,078	
	3	2	-	26,390	26,390	52,780	
	Total		-	129,468	129,468	155,858	1.2
J	1	1	50	2,629	2,679	2,679	
	3	2	395	15,634	16,029	32,058	
	Total		445	18,263	18,708	34,737	1.86
H/K	1	1	-	1,456	1,456	1,456	
	3	2	-	1,712	1,712	3,424	
	Total			3,168	3,168	4,880	1.54
P	TP-3	2	-	-	-	-	
	TS-3	2	-	-	-	-	
	DP-3	2	321	-	321	642	
	DS-3	2	23	-	23	46	
	SEC	2	-	388	388	776	
	Total		344	388	732	1,464	2.00
F	1	1	-	1,536	1,536	1,536	1.00

HAWAII ELECTRIC LIGHT COMPANY, INC.
DOCKET NO. 05-0315 TEST YEAR 2006

WEIGHTING FACTORS FOR SEC LINE COSTS

Rate	Phase	Wt.	TY 2006 No. Of Bills Sec	TY 2006 No. Of Bills Total	Weighted No. of Bills	C2 Fct
R	1	1	736,476	736,476	736,476	1.00
G	1	1	103,078	103,078	103,078	
	3	1.33	26,390	26,390	35,099	
	Total		129,468	129,468	138,177	1.07
J	1	1	2,629	2,629	2,629	
	3	1.33	15,634	15,634	20,793	
	Total		18,263	18,263	23,422	1.28
H/K	1	1	1456	1,456	1,456	
	3	1.33	1,712	1,712	2,277	
	Total		3,168	3,168	3,733	1.18
P	SEC	1.33	388	388	516	
	Total		388	388	516	1.33
F	1	1	1,536	1,536	1,536	1.00

HAWAII ELECTRIC LIGHT COMPANY, INC.
DOCKET NO. 05-0315 TEST YEAR 2006

WEIGHTING FACTORS FOR LINE TRANSFORMERS

Rate	Volt.	Phase	% Cust.	Typical Cost/Transf ($)[1]	Number of Cust per Transf.	Typical Transf Cost Per Cust ($)	C3 FCT
R	Sec	1	100.00%	2,898	3	966	1.00
G	Pri	1	0				
		3	0				
	Subtotal						
	Sec	1	79.62%	3,324	1	3,324	
		3	20.38%	7,963	1	7,963	
	Subtotal		100.00%			4,270 [2]	4.42
	Total G	1	79.62%	3,324	1	3,324	
		3	20.38%	7,963	1	7,963	
	Total		100.00%			4,270 [2]	4.42
J	Pri	1	0.27%				
		3	2.11%				
	Subtotal		2.38%				
	Sec	1	14.05%	3,608	1	3,608	
		3	83.57%	8,886	1	8,886	
	Subtotal		97.62%			7,933 [2]	8.21
	Total J	1	14.32%				
		3	85.68%				
	Total		100.00%				
H	Sec	1	44.57%	3,324	1	3,324	
		3	32.32%	7,963	1	7,963	
	Subtotal		76.89%			4,055 [2]	4.20
K	Sec	1	1.39%	3,324	1	3,324	
		3	21.72%	7,963	1	7,963	
	Subtotal		23.11%			1,776 [2]	1.84
H/K						5,831 [2]	6.04
P	Trans	3	0.00%				
	Pri	3	46.99%				
	Sec	3	53.01%	28,836	1	28,836	
	Total		100.00%			15,285 [2]	15.82
F	Sec	1		2,898	1	2,898	
	Flat	1					
	Total			2,898		2,898	1.00

[1] Based on Estimates at 1/06.
[2] Weighted.

s:\energyservices\mktprce\meco99rc\ helco2006_direct_embedcost.xls Page3
py: 8/11/2006

HAWAII ELECTRIC LIGHT COMPANY, INC.
DOCKET NO. 05-0315 TEST YEAR 2006

WEIGHTING FACTORS FOR SERVICE DROP

Rate	Volt.	Phase	% Cust.	Typical Cost Per Serv.Dr. ($)[1]	C4 FCT
R	Sec	1	100.00%	932	1.00
G	Pri	1	0.00%		
		3	0.00%		
	Subtotal		0.00%		
	Sec	1	79.62%	966	
		3	20.38%	1,718	
	Subtotal		100.00%	1,119 [2]	1.20
	Total G	1	79.62%	966	
		3	20.38%	1,718	
	Total		100.00%	1,119 [2]	1.20
J	Pri	1	0.27%	3669	
		3	2.11%	3,669	
	Subtotal		2.38%	87	0.09
	Sec	1	14.05%	1,422	
		3	83.57%	2,030	
	Subtotal		97.62%	1,896 [2]	2.03
	Total J	1	14.32%		
		3	85.68%		
	Total		100.00%	1,984	2.13
H	Sec	1	44.57%	966	
		3	32.32%	1,718	
	Subtotal		76.89%	986 [2]	1.06
K	Sec	1	1.39%	966	
		3	21.72%	1,718	
	Subtotal		23.11%	387 [2]	0.41
H/K				1,372	1.47
P	Trans.	3	0.00%		
	Pri	3	46.99%	3,669	
	Sec	3	53.01%	3,011	
	Total		100.00%	3,320 [2]	3.56
F	Sec	1		745	
	Flat	1			
	Total			745	1.00

[1] Based on 1/06 Estimates.
[2] Weighted.

s:\energyservices\mktprce\meco99rc\ helco2006_direct_embedcost.xls Page4
py: 8/11/2006

HAWAII ELECTRIC LIGHT COMPANY, INC.
DOCKET NO. 05-0315 TEST YEAR 2006

WEIGHTING FACTORS FOR METER COSTS

Rate	Volt.	Phase	% Cust.	Typical Cost Per Meter ($)[1]	C5 FCT	
R	Sec	1	100.00%	296	1.00	
		3	0.00%			
			100.00%	296	1.00	
G	Pri	1	0			
		3	0			
	Subtotal					
	Sec	1	79.62%	296		
		3	20.38%	722		
	Subtotal		100.00%	383 [2]	1.29	
	Total G	1	79.62%	296		
		3	20.38%	722		
	Total		100.00%	383 [2]	1.29	
J	Pri	1	0.27%	7113		
		3	2.11%	9927		
	Subtotal		2.38%	229	0.77	
	Sec	1	14.05%	2,785		
		3	83.57%	2,935		
	Subtotal		97.62%	2,844 [2]	9.61	
	Total J	1	14.32%			
		3	85.68%			
	Total		100.00%	3,073	10.38	
H	Sec	1	44.57%	296		
		3	32.32%	722		
	Subtotal		76.89%	365 [2]	1.23	
K	Sec	1	1.39%	2,593		
		3	21.72%	2,872		
	Subtotal		23.11%	660 [2]	2.23	
H/K				1,025	3.46	
P	Trans	3	0.00%			
	Pri	3	46.99%	11229		
	Sec	3	53.01%	4,327		
	Total		100.00%	7,571 [2]	25.58	
F	Metered:					
	Sec	1	19.99%	296		
	Flat	1	80.01%			
	Total		100.00%	59	0.20	1.00

[1] Based on 1/06 estimated costs.
[2] Weighted.

HAWAII ELECTRIC LIGHT COMPANY, INC.
DOCKET NO. 05-0315 TEST YEAR 2006

RELATIVE CUSTOMER COSTS BY PHASE

		RATE CLASS		
		G	J	H/K
C1	Primary Lines			
	Relative Cost 3ph:1ph	2	2	2
C2	Secondary Lines	3.5/3	3.5/3	3.5/3
	Relative Cost 3ph:1ph	1.17	1.17	1.17
C3	Transformers			
	Typical Installed Cost 3ph	7963	8886	7963 [1]
	Typical Installed Cost 1ph	3324	3608	3324 [1]
	Relative Cost 3ph:1ph	2.40	2.46	2.40
C4	Service Drop 60"			
	Typical Installed Cost 3ph	1718	2030	1718 [1]
	Typical Installed Cost 1ph	966	1422	966 [1]
	Relative Cost 3ph:1ph	1.78	1.43	1.78
C5	Meters			
	Typical installed Cost 3ph	722	2935	1586 [1]
	Typical Installed Cost 1ph	296	2785	365 [1]
	Relative Cost 3ph:1ph	2.44	1.05	4.34

[1] Weighted.

HAWAII ELECTRIC LIGHT COMPANY, INC.
DOCKET NO. 05-0315 TEST YEAR 2006

WEIGHTING FACTORS FOR CUSTOMER ACCOUNTS EXPENSE
(ACCT 902, 903)

(Relative Customer Cost R=1)

	% of Total Acct	R	G	J	H	K	P	F
Meter Reading Access	55%	1.00	1.13	2.50	1.13	2.50	3.50	2.13
Travel	45%	1.00	1.00	1.00	1.00	1.00	1.00	1.00
Meter Read Wtd Avg	100%	1.00	1.07	1.83	1.07	1.83	2.38	1.62
Composit wtg (902)	23.65%							
Tel Ctr CC	20.00%	1.00	1.00	0.70	1.00	1.00	0.70	0.10
Credit CD	10.00%	1.00	1.60	3.00	2.40	2.40	3.00	0.50
Field Serv CA	20.00%	1.00	1.80	2.50	1.80	1.80	3.00	0.10
Correspon CK	40.00%	1.00	1.20	2.00	1.20	1.20	2.00	2.00
Rev Acct CR	10.00%	1.00	1.20	3.00	1.40	1.40	5.00	3.00
Acct 903 Total	100.00%	1.00	1.32	2.04	1.42	1.42	2.34	1.19
Composit wtg (903)	76.35%							
Cust Acct wtd avg	100.00%	1.00	1.26	1.99	1.34	1.52	2.35	1.29

HAWAII ELECTRIC LIGHT COMPANY, INC.
DOCKET NO. 05-0315 TEST YEAR 2006

FUNCTIONALIZATION OF REGULATORY ASSETS

	12/31/05 ($000s)	12/31/06 ($000s)	Mean ($000s)	(%)	Gen Plt ($000s)	TY 2006 ($000s)	APPRISE	14172 Pension	INPUT ($000s)
Production	3,066.0	3,015.0	3,040.5	30.48%	250.4	3,290.9	0	4319.6	7,610.5
									0
Transmission	1,530.0	1,504.0	1,517.0	15.21%	125	1,642.0	0	2155.6	3,797.6
									0
Distribution:									0
Substation	543.0	534.0	538.5	5.40%	44.4	582.9	0	765.3	1,348.2
Lines	3,263.0	3,209.0	3,236.0	32.43%	266.3	3,502.3	0	4595.9	8,098.2
Transformers	777.0	764.0	770.5	7.72%	63.4	833.9	0	1094.1	1,928.0
Services	735.0	723.0	729.0	7.31%	60.1	789.1	0	1036	1,825.1
Meters	146.0	143.0	144.5	1.45%	11.9	156.4	0	205.5	361.9
Street Lighting	-	-	-	0.00%	0	-	-	-	-
Subtotal	5,464.0	5,373.0	5,418.5	100.00%	821.5	10,797.5	-	14,172.0	24,969.5
General Plt	828.0	815	821.5						
Total	10,888.0	10,707.0	10,797.5						

HAWAII ELECTRIC LIGHT COMPANY, INC.
DOCKET NO. 05-0315 TEST YEAR 2006

FUNCTIONALIZATION OF DEPRECIATION RESERVE BALANCE
L

	12/31/05 ($000s)	12/31/06 ($000s)	Mean ($000s)	(%)	Gen Plt ($000s)	TY 2006 ($000s)
Production	63,882.0	73,492.0	68,687.0	22.13%	4576	73,263.0
Transmission	52,779.0	55,533.0	54,156.0	17.44%	3606.2	57,762.2
Distribution:						
Substation	17,035.0	18,173.0	17,604.0	5.67%	1172.4	18,776.4
Lines	116,820.0	125,639.0	121,229.5	39.05%	8074.9	129,304.4
Transformers	11,255.0	11,879.0	11,567.0	3.73%	771.3	12,338.3
Services	34,389.0	37,394.0	35,891.5	11.56%	2390.4	38,281.9
Meters	1,374.0	1,247.0	1,310.5	0.42%	86.8	1,397.3
Street Lighting	-	-	-	0.00%	0.0	-
Subtotal	180,873.0	194,332.0	187,602.5	100.00%	20678.0	331,123.5
General Plt	19,874.0	21,482.0	20,678.0			
Total	317,408.0	344,839.0	331,123.5			

HAWAII ELECTRIC LIGHT COMPANY, INC.
DOCKET NO. 05-0315 TEST YEAR 2006

FUNCTIONALIZATION OF GROSS PLANT

	12/31/05 ($000s)	12/31/06 ($000s)	Mean ($000s)	(%)	Gen Plt ($000s)	TY 2006 ($000s)
Production	221,467.0	229,159.0	225,313.0	30.86%	18429	243,742.0
Transmission	107,521.0	114,126.0	110,823.5	15.18%	9065.2	119,888.7
Distribution:						
Substation	36,817.0	40,821.0	38,819.0	5.32%	3177	41,996.0
Lines	233,702.0	241,199.0	237,450.5	32.52%	19420.3	256,870.8
Transformers	55,699.0	57,457.0	56,578.0	7.75%	4628.1	61,206.1
Services	46,983.0	54,348.0	50,665.5	6.94%	4144.4	54,809.9
Meters	10,064.0	10,761.0	10,412.5	1.43%	854	11,266.5
Street Lighting	-	-	-	0.00%	0	-
Subtotal	383,265.0	404,586.0	393,925.5	100.00%	59718	789,780.0
General Plt	57,349.0	62,087.0	59,718.0			
Total	769,602.0	809,958.0	789,780.0			

HAWAII ELECTRIC LIGHT COMPANY, INC.
DOCKET NO. 05-0315 TEST YEAR 2006

FUNCTIONALIZATION OF CIAC
L

	12/31/05 ($000s)	12/31/06 ($000s)	Mean ($000s)	(%)	Gen Plt ($000s)	TY 2006 ($000s)
Production	-	-	-	0.00%	0	-
Transmission	-	-	-	0.00%	0	-
Distribution:						
Substation	-	-	-	0.00%	0	-
Lines	46,457.0	47,456.0	46,956.5	81.61%	0.0	46,956.5
Transformers	-	-	-	0.00%	0	-
Services	10,468.0	10,693.0	10,580.5	18.39%	0	10,580.5
Meters	-	-	-	0.00%	0	-
Street Lighting	-	-	-	0.00%	0	-
Subtotal	56,925.0	58,149.0	57,537.0	100.00%	0	57,537.0
General Plt	-	-	-			
Total	56,925.0	58,149.0	57,537.0			

HAWAII ELECTRIC LIGHT COMPANY, INC.
DOCKET NO. 05-0315 TEST YEAR 2006

FUNCTIONALIZATION OF CUSTOMER ADVANCES

	12/31/05 ($000s)	12/31/06 ($000s)	Mean ($000s)	(%)	Gen Plt ($000s)	TY 2006 ($000s)
Production	-	-	-	0.00%	0	-
Transmission	-	-	-	0.00%	0	-
Distribution:						
Substation	-	-	-	0.00%	0	-
Lines	23,338.0	23,874.0	23,606.0	81.61%	0.0	23,606.0
Transformers	-	-	-	0.00%	0	-
Services	5,259.0	5,380.0	5,319.5	18.39%	0	5,319.5
Meters	-	-	-	0.00%	0	-
Street Lighting	-	-	-	0.00%	0	-
Subtotal	28,597.0	29,254.0	28,925.5	100.00%	0	28,925.5
General Plt	-	-	-			
Total	28,597.0	29,254.0	28,925.5			

HAWAII ELECTRIC LIGHT COMPANY, INC.
DOCKET NO. 05-0315 TEST YEAR 2006

FUNCTIONALIZATION OF UNAMORTIZED ITC

	1962 Rev. Act ITC		Hawaii State ITC		Combined	Combined					
	12/31/05 ($000s)	12/31/06 ($000s)	12/31/05 ($000s)	12/31/06 ($000s)	12/31/05 ($000s)	12/31/06 ($000s)	Mean ($000s)	(%)	(%)	Gen Plt ($000s)	TY 2006 ($000s)
Production	-	-	3,926.5	3,926.5	3,926.5	3,926.5	3,926.5	33.29%	36.43%	370.3	4,296.8
Transmission	-	-	1,475.6	1,475.6	1,475.6	1,475.6	1,475.6	12.51%	13.69%	139.2	1,614.8
Distribution:											
Substation	-	-	563.8	563.8	563.8	563.8	563.8	4.78%	5.23%	53.2	617.0
Lines	-	-	2,964.1	2,964.1	2,964.1	2,964.1	2,964.1	25.13%	27.50%	279.6	3,243.7
Transformers	-	-	1,168.9	1,168.9	1,168.9	1,168.9	1,168.9	9.91%	10.84%	110.2	1,279.1
Services	-	-	435.2	435.2	435.2	435.2	435.2	3.69%	4.04%	41.1	476.3
Meters	-	-	244.2	244.2	244.2	244.2	244.2	2.07%	2.27%	23.1	267.3
Street Lighting	-	-	-	-	-	-	-	0.00%	0.00%	0	-
Subtotal	-	-	5,376.2	5,376.2	5,376.2	5,376.2	5,376.2		100.00%	1016.7	11,795.0
General Plt	-	-	1,016.7	1,016.7	1,016.7	1,016.7	1,016.7	8.62%			
Total	-	-	11,795.0	11,795.0	11,795.0	11,795.0	11,795.0	100.0%			

HAWAII ELECTRIC LIGHT COMPANY, INC.
DOCKET NO. 05-0315 TEST YEAR 2006

FUNCTIONALIZATION OF DEFERRED INCOME TAX

	12/31/05 ($000s)	12/31/06 ($000s)	Mean ($000s)	(%)	(%)	Gen Plt ($000s)	TY 2006 ($000s)
Production	8,313.1	8,313.1	8,313.1	33.29%	36.43%	784.1	9,097.2
Transmission	3,124.0	3,124.0	3,124.0	12.51%	13.69%	294.7	3,418.7
Distribution:							
Substation	1,193.7	1,193.7	1,193.7	4.78%	5.23%	112.6	1,306.3
Lines	6,275.5	6,275.5	6,275.5	25.13%	27.50%	592.0	6,867.5
Transformers	2,474.7	2,474.7	2,474.7	9.91%	10.84%	233.3	2,708.0
Services	921.5	921.5	921.5	3.69%	4.04%	87	1,008.5
Meters	516.9	516.9	516.9	2.07%	2.27%	48.9	565.8
Street Lighting	-	-	-	0.00%	0.00%	0	-
Subtotal	11,382.3	11,382.3	11,382.3	45.58%	100.00%	2152.6	24,972.0
General Plt	2,152.6	2,152.6	2,152.6	8.62%			
Total	24,972.0	24,972.0	24,972.0	100.00%			

HAWAII ELECTRIC LIGHT COMPANY, INC.
DOCKET NO. 05-0315 TEST YEAR 2006

FUNCTIONALIZATION OF DEPRECIATION EXPENSE

	Depr. Exp.[1] 12/31/06 ($000s)	Net Reg. Asst. 12/31/06 ($000s)	Fed. ITC Amort 12/31/06 ($000s)[2]	Amort CIAC 12/31/06 ($000s)	Total Depr. 12/31/06 ($000s)
Production	9,611.0	-102	29.0	-	9,480.0
Transmission	3,722.0	-51	41.0	-	3,630.0
Distribution:					
Substation	1,339.0	-18	13.0	-	1,308.0
Lines	10,172.0	-108	57.0	2,487.0	7,520.0
Transformers	1,725.0	-26	20.0	-	1,679.0
Services	3,340.0	-24	13.0	560.0	2,743.0
Meters	262.0	-5	4.0	-	253.0
Street Lighting	-	0	-	-	-
Subtotal	16,838.0	-181	107.0	3,047.0	13,503.0
General Plt	2,799.0	-27	11.0	-	2,761.0
Total	32,970.0	(361.0)	188.0	3,047.0	29,374.0
					29,374.0

[1] Depreciation Accrual less vehicles
[2] 1962 Rev Act ITC + 1971 Rev Act ITC.

HAWAII ELECTRIC LIGHT COMPANY, INC.
DOCKET NO. 05-0315 TEST YEAR 2006

DERIVATION OF LOAD FACTOR (KWH/KWm) BY SUBGROUPS

Rate Class	Serv. Volt	Ph	Recorded Oct 04- Sep 05[1] KWH	KWm	LF			
R	Sec	1&3			128.64 [2]			
G	Sec	1&3			184.65 [2]			
J	TP	1&3	-	-	-			
	TS	1&3	-	-	-			
	DP	1&3	27,058,166.0	98,968.4	273.40	J-Primary		
	DS	1&3	1,628,005.0	4,554.2	357.47	277.1006		
	Sec	1&3	299,686,005.0	910,791.1	329.04			
	Total J		328,372,176.0	1,014,313.7	323.74			
H	Sec	1&3	8,225,004.0	22,875.4 4		kwb		
K	Sec	1&3	10,687,618.0	34,887.5				
	TOTAL H/K		18,912,622.0	57,762.9	327.42			
P	TP	3	-	-	-			
	TS	3	-	-	-			
	DP	3	141,993,222.0	281,661.8	504.13			
	DS	3	4,888,533.0	10,012.0	488.27			
	Sec	3	94,156,420.0	191,406.6	491.92			
	TOTAL P		241,038,175.0	483,080.4	498.96			
				kwb		Bills	Kw/Cust	
F	Sec.	1	188,040.0	431.9	435.4	298	1.4	
	Flat	1	4,079,638.0	12,351.2	330.3	1,191	10.4	
	Total F		4,267,678.0	12,783.1	333.9	1,489	8.6	

[1] See rate runs.
[2] See 2001-2002 HELCO Class Load Study.

HAWAII ELECTRIC LIGHT COMPANY, INC.
DOCKET NO. 05-0315 TEST YEAR 2006

ALLOCATION OF OTHER OPERATING REVENUE INCREASE

AT PRESENT RATES

	R	G	J	H/K	P	F	TOTAL	check
Serv Establish Charge ($)	202,920	22,800	2,280	-	-	-	228,000	228,000
Field Collect Charge ($)	12,000	-	-	-	-	-	12,000	12,000
Late Pymt Chrg, reg ($)	302,170	38,458	76,916	10,988	120,868	-	549,400	549,400
Reconnect ($)	24,030	2,700	270	-	-	-	27,000	27,000
Returned Check ($)	31,680	1,320	-	-	-	-	33,000	33,000
Purch Pwr Chrg ($)	-	1,000	1,000	-	-	-	2,000	2,000
CACS Program Factor[1] (%)	-	-	-	-	-	-	-	-
Total	572,800	66,278	80,466	10,988	120,868	-	851,400	
% Total Other Rev @ Pres.	67.28%	7.78%	9.45%	1.29%	14.20%	0.00%	100.00%	
	572.8	66.3	80.4	11	120.9		$ 851.4	
Serv Establish Charge (%)	89.00%	10.00%	1.00%	0.00%	0.00%	0.00%	100.00%	
Field Collect Charge (%)	100.00%	0.00%	0.00%	0.00%	0.00%	0.00%	100.00%	
Late Pymt Chrg, reg (%)	55.00%	7.00%	14.00%	2.00%	22.00%	0.00%	100.00%	
Reconnect (%)	89.00%	10.00%	1.00%	0.00%	0.00%	0.00%	100.00%	
Returned Check (%)	96.00%	4.00%	0.00%	0.00%	0.00%	0.00%	100.00%	
Purch Pwr Chrg (%)	0.00%	50.00%	50.00%	0.00%	0.00%	0.00%	100.00%	
CACS Program Factor[1] (%)	0.00%	0.00%	0.00%	0.00%	0.00%	0.00%	0.00%	

AT PROPOSED RATES

	R	G	J	H/K	P	F	TOTAL	check
Serv Establish Charge ($)	202,920	22,800	2,280	-	-	-	228,000	228,000
Field Collect Charge ($)	12,000	-	-	-	-	-	12,000	12,000
Late Pymt Chrg, reg ($)	330,110	42,014	84,028	12,004	132,044	-	600,200	600,200
Reconnect ($)	24,030	2,700	270	-	-	-	27,000	27,000
Returned Check ($)	31,680	1,320	-	-	-	-	33,000	33,000
Purch Pwr Chrg ($)	-	1,000	1,000	-	-	-	2,000	2,000
CACS Program Factor[1] (%)	-	-	-	-	-	-	-	-
Total	600,740	69,834	87,578	12,004	132,044	-	902,200	
	600.7	69.8	87.6	12	132.1		$ 902.2	

TOTAL OTHER OPERATING REVENUE INCREASE

	R	G	J	H/K	P	F	
Proposed Increase ($)	27,940	3,556	7,112	1,016	11,176	-	$ 50,800
	27.9	3.6	7.1	1	11.2	0	$ 50.8

[1] Used for Schedule F Fixture Charge.

HAWAII ELECTRIC LIGHT COMPANY, INC

DATA REQUIREMENTS FOR COST-OF-SERVICE STUDY
FOR HELCO DOCKET NO. 05-0315

TEST-YEAR ESTIMATED NET REGULATORY ASSET BALANCE, BY FUNCTION
TEST YEAR 2006

(In Thousands)

Function	Estimated Plant Balance 12/31/2006	Actual Balance 12/31/2005	Estimated 2006 Amortization	Estimated 2006 Additions	Estimated Balance 12/31/2006
Production	226,574	3,066	(102)	51	3,015
Transmission	113,063	1,530	(51)	25	1,504
Distribution					
Substations	40,130	543	(18)	9	534
Lines	241,199	3,263	(108)	54	3,209
Transformers	57,457	777	(26)	13	764
Services	54,348	735	(24)	12	723
Meters	10,762	146	(5)	2	143
Subtotal	403,896	5,464	(181)	90	5,373
General	61,137	828	(27)	14	815
Total	804,670	10,888	(361)	180	10,707

Allocated based upon Estimated Plant Balance @ 12/31/2006

Hawaii Electric Light Company
Data Requirements For Cost-Of-Service Study
HELCO Docket No. 05-0315
Test-Yr Estimate For Amortization of Federal ITC
Test Year 2006
(In Thousands)

Function	DR(CR) Plant Balance @ 12/31/85	Plant Reserve @ 12/31/85	Plant, Net @ 12/31/85	%	Est'd Amort Fed ITC ('62/'71 ACT) 2006	Est'd Amort SITC (Gross)* 2006	Total 2006
Production	28,314	(13,449)	14,865	15.41%	(29)	(167)	(196)
Transmission	32,115	(10,956)	21,159	21.93%	(41)	(63)	(104)
Distribution:							
Substations	8,651	(1,870)	6,781	7.03%	(13)	(24)	(37)
Lines	47,432	(18,198)	29,234	30.30%	(57)	(126)	(183)
Transformers	13,094	(2,695)	10,399	10.78%	(20)	(50)	(70)
Services	8,785	(2,217)	6,568	6.81%	(13)	(18)	(31)
Meters	3,042	(897)	2,146	2.22%	(4)	(10)	(14)
Subtotal	81,005	(25,878)	55,127	57.14%	(107)	(228)	(335)
General	9,426	(4,103)	5,323	5.52%	(11)	(43)	(54)
Total	150,860	(54,386)	96,474	100.00%	(188)	(501)	(689)

* In prior years, this amount was reported net of tax. For test year 2006, tax witness T-13 will be reporting SITC gross of tax.

awaii Electric Light Company
Data Requirements For Cost-Of-Service Study
HELCO Docket No. 05-0315
Test-Yr Estimate For Deferred Income Taxes
Test Year 2006
(In Thousands)

Use these % not the dollars

Function	DR(CR) Plant Balance @ 12/31/06	Plant Reserve @ 12/31/06	Plant, Net @ 12/31/06	%	Est'd Def'd Taxes @ 12/31/06
Production	226,574	(73,492)	153,082	33.29%	(9,810)
Transmission	*113,063*	*(55,533)*	*57,530*	*12.51%*	*(3,687)*
Distribution:					
Substations	40,130	(18,173)	21,957	4.78%	(1,407)
Lines	241,199	(125,639)	115,560	25.13%	(7,406)
Transformers	57,457	(11,879)	45,578	9.91%	(2,921)
Services	54,348	(37,394)	16,954	3.69%	(1,087)
Meters	10,762	(1,247)	9,515	2.07%	(610)
Subtotal	403,896	(194,332)	209,564	45.57%	(13,431)
General	61,137	(21,482)	39,655	8.62%	(2,541)
Total	*804,670*	*(344,839)*	*459,831*	*100.00%*	*(29,469)*

Hawaii Electric Light Company
Data Requirements For Cost-Of-Service Study
HELCO Docket No. 05-0315
Test-Yr Estimate For Unamortized State ITC
Test Year 2006
(In Thousands)

use % for allocation of 11,795

Function	DR(CR) Plant Balance @ 12/31/06	Plant Reserve @ 12/31/06	Plant, Net @ 12/31/06	%	Est'd Unamort'd SITC (Gross) @ 12/31/06
Production	226,574	(73,492)	153,082	33.29%	4,007
Transmission	113,063	(55,533)	57,530	12.51%	1,506
Distribution:					
Substations	40,130	(18,173)	21,957	4.78%	575
Lines	241,199	(125,639)	115,560	25.13%	3,024
Transformers	57,457	(11,879)	45,578	9.91%	1,193
Services	54,348	(37,394)	16,954	3.69%	444
Meters	10,762	(1,247)	9,515	2.07%	249
Subtotal	403,896	(194,332)	209,564	45.57%	5,485
General	61,137	(21,482)	39,655	8.62%	1,037
Total	804,670	(344,839)	459,831	100.00%	12,035

* In prior years, this amount was reported net of tax. For test year 2006, tax witness T-13 will be reporting SITC gross of tax.

HAWAII ELECTRIC LIGHT COMPANY, INC

DATA REQUIREMENTS FOR COST-OF-SERVICE STUDY
FOR HELCO DOCKET NO. 05-0315

TEST-YEAR ESTIMATED CUSTOMER ADVANCES
TEST YEAR 2006

(In Thousands)

Function	Estimated Plant Balance 12/31/2006	Actual Cust Advs Balance 12/31/2005	Estimated 2006 Receipts	Estimated 2006 Refunds	Estimated 2006 Transfers	Estiamted Cust Advs Balance 12/31/2006
Distribution						
Lines	241,199	23,338	2,637	(1,043)	(1,058)	23,874
Services	54,348	5,259	594	(235)	(238)	5,380
Total	295,547	28,597	3,231	(1,278)	(1,296)	29,254

Allocated based upon Estimated Plant Balance @ 12/31/06

HAWAII ELECTRIC LIGHT COMPANY, INC

DATA REQUIREMENTS FOR COST-OF-SERVICE STUDY
FOR HELCO DOCKET NO. 05-0315

TEST-YEAR ESTIMATED CIAC
TEST YEAR 2006

(In Thousands)

Function	Estimated Plant Balance 12/31/2006	Actual CIAC Balance 12/31/2005	Normalization Adjustments	Normalized CIAC Balance 12/31/2005	Estimated 2006 Additions	Estimated 2006 Transfers	Estimated 2006 Amortization	Estimated Balance 12/31/2006
Distribution								
Lines	241,199	46,155	302	46,457	2,428	1,058	(2,487)	47,456
Services	54,348	10,400	68	10,468	547	238	(560)	10,693
Total	295,547	56,555	370	56,925	2,975	1,296	(3,047)	58,149

Allocated based upon Estimated Plant Balance @ 12/31/06

HAWAII ELECTRIC LIGHT COMPANY, INC.

DATA REQUIREMENTS FOR COST-OF-SERVICE STUDY
FOR HELCO DOCKET NO. 05-0315

TEST-YEAR GROSS PLANT IN-SERVICE *revised 3/16/06*
TEST YEAR 2006

(In Thousands)

Function	Actual Plant Balance 12/31/2005	Normalization Adjustment	Normalized Plant Balance 12/31/2005	2006 Additions	2006 JP Sales	2006 Retires	Plant Balance 12/31/2006
Production							
Land	609		609	1,976			2,585
Depreciable Plant	220,858		220,858	5,716			226,574
Subtotal	221,467	-	221,467	7,692	-	-	229,159
Transmission							
Land	519		519	544			1,063
Depreciable Plant	107,002		107,002	6,846	(108)	(677)	113,063
Subtotal	107,521	-	107,521	7,390	(108)	(677)	114,126
Distribution							
Land	627	64	691				691
Substation	36,126		36,126	4,159		(155)	40,130
Lines and Poles	233,702		233,702	9,273	(1,051)	(725)	241,199
Transformers	55,699		55,699	2,459		(701)	57,457
Services	46,983		46,983	7,506		(141)	54,348
Meters	10,064		10,064	1,004		(307)	10,761
Subtotal	383,201	64	383,265	24,401	(1,051)	(2,029)	404,586
General							
Land	950		950				950
Depreciable Plant*	56,399		56,399	5,836		(1,098)	61,137
Subtotal	57,349	-	57,349	5,836	-	(1,098)	62,087
TOTAL	769,538	64	769,602	45,319	(1,159)	(3,804)	809,958

*Includes vehicles

HAWAII ELECTRIC LIGHT COMPANY, INC.

DATA REQUIREMENTS FOR COST-OF-SERVICE STUDY
FOR HELCO DOCKET NO. 05-0315

TEST YEAR ACCUMULATED DEPRECIATION
TEST YEAR 2006

(In Thousands)

Function	+ Beginning Acc Depr Balance 12/31/2005	+ Depr Accrual	- Gross Retires	- Removal Cost	+ Gross Salvage	Estimated Ending Acc Depr Balance 12/31/2006
Production	63,882	9,610				73,492
Transmission	52,779	3,722	(677)	(267)	(24)	55,533
Distribution						
Substation	17,035	1,339	(155)	(46)		18,173
Lines and Poles	116,820	10,172	(725)	(554)	(74)	125,639
Transformers	11,255	1,72~~8~~ 5	(701)	(401)		11,879
Services	34,389	3,340	(141)	(195)	1	37,394
Meters	1,374	262	(307)	(82)		1,247
Subtotal	180,873	16,83~~9~~ 10	(2,029)	(1,278)	(73)	194,332
Vehicles	3,460	608	(490)		49	3,627
Other	16,414	2,077	(608)	(33)	5	17,855
General	19,874	2,685	(1,098)	(33)	54	21,482
TOTAL	317,408	32,856	(3,804)	(1,578)	(43)	344,839

*Includes vehicles

+ 114 = 2799

2006
Energy Loss Factors

Hawaiian Electric Light Co.
2006 Estimated Demand & Energy Losses

	Demand Losses For System Peak (MW)	Demand Losses For System Peak Percent	Demand Losses For System Minimum (MW)	Demand Losses For System Minimum Percent	Energy Losses (GWHr)	Energy Losses Percent	
A. HELCO Net Gen	107.0	52.2%	37.0	43.7%	533.9	42.67%	
B. Delivered to HELCO GSU Tsf.	107.0	52.2%	37.0	43.7%	533.9	42.67%	Gensulf
HELCO GSU Tsf Losses	0.7	0.3%	0.2	0.2%	3.6	0.29%	
C. HELCO Gen Delivered To 138 kV	106.3	51.8%	36.9	43.5%	530.4	42.38%	
IPP Gen Injection	98.2	47.8%	47.7	56.3%	717.5	57.33%	
Delivered To Transmission	204.5	99.7%	84.6	99.8%	1247.8	99.72%	
Trans Losses	6.3	3.1%	3.7	4.4%	52.9	4.23%	TLLF
F. Delivered To Dist. Subs	198.2	96.6%	80.9	95.4%	1194.9	95.49%	
Dist Tsf Losses	1.8	0.9%	0.8	1.0%	9.4	0.75%	TTPT
G. Delivered To Dist	196.4	95.7%	80.1	94.5%	1185.5	94.74%	
Dist Losses	1.9	0.9%	0.3	0.4%	7.2	0.58%	PLLF
H. Delivered To Dist/Sec Tsf.	194.6	94.8%	79.7	94.0%	1178.3	94.16%	
Sec Tsf Losses	3.2	1.5%	2.5	2.9%	21.7	1.74%	PTST
I. Delivered To Sec	191.4	93.3%	77.3	91.1%	1156.6	92.43%	
Sec Losses	1.8	0.9%	0.4	0.4%	7.0	0.56%	SLLF
J. Delivered To Meter	189.6	92.4%	76.9	90.7%	1149.6	91.86%	
Company Use	0.3	0.1%	0.1	0.1%	1.7	0.13%	
Sales	189.3	92.2%	76.8	90.6%	1147.9	91.73%	
Total Losses	15.6	7.6%	7.9	9.3%	101.8	8.14%	
System Total	205.2		84.8		1251.4		

Notes:
1) "Total Losses" do not include auxiliary station loads.
2) Percent values are percent of the "System Total."
3) Demand values are estimated per ideal conditions.
4) Energy generated values are estimated per GPD analysis

1/31/2006

METER INSTALLATION COST

RATE CLASS **R/E (Non-Demand Sec 1-Ph)**

Materials:	TOTAL MATERIAL	$26.00
Labor:	TOTAL LABOR	$71.44
Engineering:	TOTAL ENGINEERING	$23.66
Overhead:	TOTAL OVERHEAD	175.01
	TOTAL COST	**$296.11**

R&F

METER INSTALLATION COST

RATE CLASS **G (Non-Demand Sec 3-Ph)**

Materials:	TOTAL MATERIAL	$240.00
Labor:	TOTAL LABOR	$107.16
Engineering:	TOTAL ENGINEERING	$46.11
Overhead:	TOTAL OVERHEAD	328.55
	TOTAL COST	**$721.82**

G-3 Phase

METER INSTALLATION COST

RATE CLASS **J (Demand Sec 1-Ph w/2 CTs)**

Materials:	TOTAL MATERIAL	$424.00
Labor:	TOTAL LABOR	$542.01
Engineering:	TOTAL ENGINEERING	$217.03
Overhead:	TOTAL OVERHEAD	1602.05
	TOTAL COST	**$2,785.09**

J 1 Phase Sec

METER INSTALLATION COST

RATE CLASS J (Demand Pri 1-Ph w/1 CT and 1 PT

Materials:	TOTAL MATERIAL	$1,453.00
Labor:	TOTAL LABOR	$1,459.87
Engineering:	TOTAL ENGINEERING	$461.09
Overhead:	TOTAL OVERHEAD	3738.61
	TOTAL COST	**$7,112.57**

J 1 Phase
Primary

METER INSTALLATION COST

RATE CLASS J (Demand Sec 3-Ph w/3 CTs

Materials:	TOTAL MATERIAL	$516.00
Labor:	TOTAL LABOR	$577.73
Engineering:	TOTAL ENGINEERING	$239.47
Overhead:	TOTAL OVERHEAD	1602.05
	TOTAL COST	**$2,935.25**

J 3 Phase
Secondary

METER INSTALLATION COST

RATE CLASS **J (Demand Pri 3-Ph w/2 CTs and 2 PTs)**

Materials:	TOTAL MATERIAL	$2,653.00
Labor:	TOTAL LABOR	$1,817.07
Engineering:	TOTAL ENGINEERING	$596.29
Overhead:	TOTAL OVERHEAD	4860.64
	TOTAL COST	**$9,927.00**

J 3 Phase
Primary

METER INSTALLATION COST

RATE CLASS **H (Non-Demand Sec 1-Ph)**

Materials:	TOTAL MATERIAL	$26.00
Labor:	TOTAL LABOR	$71.44
Engineering:	TOTAL ENGINEERING	$23.66
Overhead:	TOTAL OVERHEAD	175.01
	TOTAL COST	**$296.11**

H 1 phase
+G 1 phase

METER INSTALLATION COST

RATE CLASS H (Non-Demand Sec 3-Ph)

Materials:	TOTAL MATERIAL	$240.00
Labor:	TOTAL LABOR	$107.16
Engineering:	TOTAL ENGINEERING	$46.11
Overhead:	TOTAL OVERHEAD	$328.55
	TOTAL COST	**$721.82**

H 3 Phase

METER INSTALLATION COST

RATE CLASS **K (Demand Sec 1-Ph w/2 CTs)**

Materials:	TOTAL MATERIAL	$374.00
Labor:	TOTAL LABOR	$566.87
Engineering:	TOTAL ENGINEERING	$190.69
Overhead:	TOTAL OVERHEAD	$1,461.89
	TOTAL COST	**$2,593.45**

K 1 Phase Sec

METER INSTALLATION COST

RATE CLASS K (Demand Sec 3-Ph w/3 CTs)

Materials:	TOTAL MATERIAL	$529.00
Labor:	TOTAL LABOR	$602.59
Engineering:	TOTAL ENGINEERING	$190.69
Overhead:	TOTAL OVERHEAD	$1,550.08
	TOTAL COST	**$2,872.36**

K 3 Phase Sec

METER INSTALLATION COST

RATE CLASS P (Demand Pri 3-Ph w/3 CTs and 2 PTs)

Materials:	TOTAL MATERIAL	$3,743.00
Labor:	TOTAL LABOR	$1,817.07
Engineering:	TOTAL ENGINEERING	$596.29
Overhead:	TOTAL OVERHEAD	$5,072.97
	TOTAL COST	**$11,229.33**

P 3 Phase Primary

METER INSTALLATION COST

RATE CLASS **P (Demand Sec 3-Ph w/3 CTs and 2 PTs)**

Materials:	TOTAL MATERIAL	$1,247.00
Labor:	TOTAL LABOR	$745.47
Engineering:	TOTAL ENGINEERING	$258.29
Overhead:	TOTAL OVERHEAD	$2,076.00
	TOTAL COST	**$4,326.76**

P 3 phase Sec

EYO / WS

- HELCO - 1/1/95

HAWAIIAN ELECTRIC COMPANY, INC.

DATA REQUIREMENTS FOR COST-OF-SERVICE STUDY
FOR HECO DOCKET _____

TYPICAL SERVICE DROPS COSTS BY CUSTOMER CLASS

DATA PERIOD: 1/1/95

RATE CLASS	SERVICE VOLTAGE	PHASE	SERVICE DROP SIZE	TYPICAL INSTALLED COST/SERVICE*
R,E	SEC	1 732	#4/3 TPX	$ ~~467.00~~ 634 616.55
G	SEC	1 766	#1/0 TPX	$ 657.00 796 810.53
		3 1718	#1/0 QUAD	$ ~~1,165.00~~ 1,397.77
J	SEC	1 1422	#4/0 TPX	$ ~~979.00~~ 1130 1,159.27
		3 3040	#4/0 QUAD	$ ~~1,352.00~~ 1,[illegible]
L	SEC	1		$ ~~1,147~~ 1535
		3		$
H	SEC	1		$
		3		$
K	SEC	1		$
		3		$
P	TRANS	3	—	$ 2941
P	PRIM	3 3669	#1/0 AAC (4W)	$ 2,503.00 ~~2,[illegible]~~
P	SEC	3 3011	#336.4 MCM (4W)	$ ~~4,928.00~~ 2272 ~~2,[illegible]~~
F	PRIM	1	—	$ —
F	SEC	1	N/A	$ ~~250.00~~ ~~300~~ 303

N/A

716

* Current installed cost for typical overhead service drops including material, labor, transportation and overheads.

HLCOS1B/2-1-89

INDIVIDUAL SUMMARY - Overhead Cost Estimate

Project: 1-Ph, O.H. Transformer (1-10 KVA) Date: 1:26.06
Planner: 0 Request Number: 0

CAPITAL:	Direct Engineering (includes WS/WX & transportation)	$	131.16		
	Direct Labor Cost (NI-includes transportation)	$	430.51		
	Direct Material Cost	$	1,065.28		
	Direct Outside Materials	$	-		
	Direct Outside Services	$	200.00		
	Total Capital	$	1,826.95	$	1,826.95
O & M:	Direct Labor (NE-includes transportation)	$	-		
REMOVAL:	Direct Labor (NR/NS-includes transportation)	$	-		
	Total O & M / Removal	$	-	$	-
OVERHEAD:	Total Overhead	$	1,071.43	$	1,071.43
	Sub Total			$	2,898.38
	Plus HELCO JP Shares (Verizon installed)			$	-
	Plus Verizon Transfer Cost			$	-
	Total Project Cost			$	2,898
	Less Total Customer Cost			$	2,898
	HELCO Betterment	$	0		
	Less Verizon JP Shares (2-way-HELCO installed)			$	-
	Customer Line Extension Cost			$	2,898
	State GET (4.166%)			$	121
	Customer Advance - subtotal			$	3,019
	Line Extn. Allowance (Cost of Line Extn. but not more than 36 months revenue plus tax, (ie $3562 w/o electric WH, or $5250 w/ electric WH, which ever applies)				$0
Total Customer Advance (includes State GET)	(25200000 / 25201000 / 25202000)				**$3,019**

Calculated 36m Rev Credit + tax

	Man-hour	Crew-hour
Capital	12.0	
O & M	0.0	
Removal	0.0	
TOTAL	12.0	0.0

10 % Payment		302
90 % Payment	$	2,717

Prepared By: _____ Checked by: _____

INDIVIDUAL SUMMARY - Overhead Cost Estimate

Project: 1-Ph, O.H. Transformer (1-25 KVA) Date: 1/26/06
Planner: 0 Request Number: 0

CAPITAL:	Direct Engineering (includes WS,WX & transportation)	$	131.16		
	Direct Labor Cost (NI-includes transportation)	$	430.51		
	Direct Material Cost	$	1,452.29		
	Direct Outside Materials	$	-		
	Direct Outside Services	$	200.00		
	Total Capital	$	2,213.96	$	2,213.96
O & M:	Direct Labor (NE-includes transportation)	$	-		
REMOVAL:	Direct Labor (NR,NS-includes transportation)	$	-		
	Total O & M / Removal	$	-	$	-
OVERHEAD:	Total Overhead	$	1,109.86	$	1,109.86
	Sub Total			$	3,323.82
	Plus **HELCO** JP Shares (Verizon installed)			$	-
	Plus Verizon Transfer Cost			$	-
	Total Project Cost			$	3,324
	Less Total Customer Cost			$	3,324
	HELCO Betterment	$	(0)		
	Less Verizon JP Shares (2-way-HELCO installed)			$	-
	Customer Line Extension Cost			$	3,324
	State GET (4.166%)			$	138
	Customer Advance - subtotal			$	3,462
	Line Extn. Allowance (Cost of Line Extn. but not more than 36 months revenue plus tax, (ie $3562 w/o electric WH, or $5250 w/ electric WH, which ever applies)				$0
Total Customer Advance (includes State GET)	(25200000 / 25201000 / 25202000)				**$3,462**

Calculated 36m Rev Credit + tax

G 1 Pinas
H 1 Pino

	Man-hour	Crew-hour
Capital	12.0	
O & M	0.0	
Removal	0.0	
TOTAL	12.0	0.0

10 % Payment		346
90 % Payment	$	3,116

Prepared By: _____ Checked by: _____

INDIVIDUAL SUMMARY - Overhead Cost Estimate

Project: 3-Ph. O.H. Transformer (3-25 KVA) Date: 1.26/06
Planner: 0 Request Number: 0

CAPITAL:	Direct Engineering (includes WS/WX & transportation)	$	237.77		
	Direct Labor Cost (NI-includes transportation)	$	764.30		
	Direct Material Cost	$	4,575.01		
	Direct Outside Materials	$	-		
	Direct Outside Services	$	200.00		
	Total Capital	$	5,777.68	$	5,777.68
O & M:	Direct Labor (NE-includes transportation)	$	-		
REMOVAL:	Direct Labor (NR/NS-includes transportation)	$	-		
	Total O & M / Removal	$	-	$	-
OVERHEAD:	Total Overhead	$	2,184.82	$	2,184.82
	Sub Total			$	7,962.50
	Plus **HELCO** JP Shares (Verizon installed)			$	-
	Plus Verizon Transfer Cost			$	-
	Total Project Cost			$	7,963
	Less Total Customer Cost			$	7,963
	HELCO Betterment	$	(1)		
	Less Verizon JP Shares (2-way-HELCO installed)			$	-
	Customer Line Extension Cost			$	7,963
	State GET (4.166%)			$	332
	Customer Advance - subtotal			$	8,295
Calculated 36m Rev Credit + tax	Line Extn. Allowance (Cost of Line Extn. but not more than 36 months revenue plus tax, fie $3562 w/o electric WH, or $5250 w/ electric WH, which ever applies)				$0
Total Customer Advance (includes State GET)	(25200000 / 25201000 / 25202000)				**$8,295**

G 3-Phase
H 3-Phase

	Man-hour	Crew-hour
Capital	21.3	
O & M	0.0	
Removal	0.0	
TOTAL	21.3	0.0

10 % Payment		829
90 % Payment	$	7,465

Prepared By: _____ Checked by: _____

INDIVIDUAL SUMMARY - Overhead Cost Estimate

Project: 1-Ph, O.H. Transformer (1-50 KVA) Date: 1/26/06
Planner: 0 Request Number: 0

CAPITAL:	Direct Engineering (includes WS/WX & transportation)	$	131.16		
	Direct Labor Cost (NI-includes transportation)	$	430.51		
	Direct Material Cost	$	1,710.53		
	Direct Outside Materials	$	-		
	Direct Outside Services	$	200.00		
	Total Capital	$	2,472.20	$	2,472.20
O & M:	Direct Labor (NE-includes transportation)	$	-		
REMOVAL:	Direct Labor (NR,NS-includes transportation)	$	-		
	Total O & M / Removal	$	-	$	-
OVERHEAD:	Total Overhead	$	1,135.50	$	1,135.50
	Sub Total			$	3,607.70
	Plus HELCO JP Shares (Verizon installed)			$	-
	Plus Verizon Transfer Cost			$	-
	Total Project Cost			$	3,608
	Less Total Customer Cost			$	3,608
	HELCO Betterment	$	(0)		
	Less Verizon JP Shares (2-way-HELCO installed)			$	-
	Customer Line Extension Cost			$	3,608
	State GET (4.166%)			$	150
	Customer Advance - subtotal			$	3,758

J
1 Phase

Calculated 36m Rev Credit + tax

Line Extn. Allowance (Cost of Line Extn. but not more than 36 months revenue plus tax, (ie $3562 w/o electric WH, or $5250 w/ electric WH, which ever applies) $0

Total Customer Advance (includes State GET) (25200000 / 25201000 / 25202000) **$3,758**

	Man-hour	Crew-hour
Capital	12.0	
O & M	0.0	
Removal	0.0	
TOTAL	12.0	0.0

10 % Payment		376
90 % Payment	$	3,382

Prepared By: _____ Checked by: _____

INDIVIDUAL SUMMARY - Overhead Cost Estimate

Project: 3-Ph. O.H. Transformer (3-50 KVA) Date: 1-26-06
Planner: 0 Request Number: 0

CAPITAL:	Direct Engineering (includes WS,WX & transportation)	$	237.77		
	Direct Labor Cost (NI-includes transportation)	$	764.90		
	Direct Material Cost	$	5,414.71		
	Direct Outside Materials	$	-		
	Direct Outside Services	$	200.00		
	Total Capital	$	6,617.38	$	6,617.38
O & M:	Direct Labor (NE-includes transportation)	$	-		
REMOVAL:	Direct Labor (NR/NS-includes transportation)	$	-		
	Total O & M / Removal	$	-	$	-
OVERHEAD:	Total Overhead	$	2,268.20	$	2,268.20
	Sub Total			$	8,885.58
	Plus **HELCO** JP Shares (Verizon installed)			$	-
	Plus Verizon Transfer Cost			$	-
	Total Project Cost			$	8,886
	Less Total Customer Cost			$	8,886
	HELCO Betterment	$	(0)		
	Less Verizon JP Shares (2-way-HELCO installed)			$	-
	Customer Line Extension Cost			$	8,886
	State GET (4.166%)			$	370
	Customer Advance - subtotal			$	9,256
	Line Extn. Allowance (Cost of Line Extn. but not more than 36 months revenue plus tax, (ie $3562 w/o electric WH, or $5250 w/ electric WH, which ever applies)				$0
Total Customer Advance (includes State GET)	(25200000 / 25201000 / 25202000)				**$9,256**

Calculated 36m Rev Credit + tax

J 3-Ph

	Man-hour	Crew-hour
Capital	21.3	
O & M	0.0	
Removal	0.0	
TOTAL	21.3	0.0

10 % Payment		926
90 % Payment	$	8,331

Prepared By: _____ Checked by: _____

INDIVIDUAL SUMMARY - Overhead Cost Estimate

Project: 3-Ph. H-Frame (3-167 KVA) Date: 0
Planner: CN Request Number: 0

CAPITAL:	Direct Engineering (includes WS/WX & transportation)	$	824.89		
	Direct Labor Cost (NI-includes transportation)	$	2,668.24		
	Direct Material Cost	$	17,393.84		
	Direct Outside Materials	$	-		
	Direct Outside Services	$	200.00		
	Total Capital	$	21,086.97	$	21,086.97
O & M:	Direct Labor (NE-includes transportation)	$	-		
REMOVAL:	Direct Labor (NR/NS-includes transportation)	$	-		
	Total O & M / Removal	$	-	$	-
OVERHEAD:	Total Overhead	$	7,749.18	$	7,749.18
	Sub Total			$	28,836.15
	Plus **HELCO** JP Shares (Verizon installed)			$	-
	Plus Verizon Transfer Cost			$	-
	Total Project Cost			$	28,836
	Less Total Customer Cost			$	28,836
	HELCO Betterment	$	0		
	Less Verizon JP Shares (2-way-HELCO installed)			$	-
	Customer Line Extension Cost			$	28,836
	State GET (4.166%)			$	1,201
	Customer Advance - subtotal			$	30,037
Calculated 36m Rev Credit + tax	Line Extn. Allowance (Cost of Line Extn. but not more than 36 months revenue plus tax, (ie $3562 w/o electric WH, or $5250 w/ electric WH, which ever applies)				$0
Total Customer Advance (includes State GET)	(25200000 / 25201000 / 25202000)				**$30,037**

	Man-hour	Crew-hour
Capital	74.3	
O & M	0.0	
Removal	0.0	
TOTAL	74.3	0.0

10 % Payment 3,004
90 % Payment $ 27,034

Prepared By: _____ Checked by: _____

CA-IR-224

Ref: T-20, page 8, Classification of Distribution Costs.

According to Mr. Young's testimony, "some distribution facilities or equipment, such as the service drops and meters, are required to connect and serve the customer regardless of their kW demand, and are therefore appropriately classified to customer components." Please provide the following information:

a. Please state the minimum load-serving capacity of the following distribution minimum-sized plant facilities that HELCO installs in the normal course of business:
   1. primary overhead distribution lines;
   2. secondary overhead distribution lines;
   3. primary underground distribution lines;
   4. secondary underground distribution lines;
   5. distribution poles; and
   6. distribution transformers.

b. Describe how many individual residential customers, with average demand levels, could be served by the capacity within the minimum sized facilities set forth in your response to part (a) of this information request.

c. State and explain how/if the size and costs of HELCO distribution lines, poles and distribution transformers are influenced by the type and location of customers.

d. Provide complete copies of all studies, reports, analyses, workpapers and other documents supportive of your response to part (c) of this information request.

HELCO Response:

a. The load-serving capacity of the facilities described in the request depends on the number, type, and location of the customers being served by those facilities.

b. See the response to part (a) above.

c. See the response to part (a) above.

d. There are no studies, reports, analyses, workpapers or other documents to be provided.

CA-IR-225

Ref: T-20, page 12, Allocation of Costs.

Please provide complete copies of the HELCO load studies relied upon to develop allocation factors used by Mr. Young in the embedded cost of service study.

HELCO Response:

The requested information is voluminous and is available for inspection at HECO's Regulatory Affairs Division office, Suite 1301, Central Pacific Plaza, 220 South King Street, Honolulu, Hawaii. Please contact Dean Matsuura at 543-4622 to make arrangements to inspect the requested information.

Mr. Young relied upon a draft version of the Class Load Study in preparing the embedded cost of service study. Two values used from the draft version of the Class Load Study have been revised: 1) on Table 4.14, "Summary of the Twelve-Month Load Factors by Rate Class", the Load Factor for Schedule G is 52% (the draft version result was 51%); and 2) On Table 6.1, "Summary of Monthly Load Statistics at the Sales Level, Schedule G: General Service Non-demand", the average customer kWh is 803 kWh per month, and the average maximum non-coincident demand is 4.2 kW for a kWh/kW load factor of 191.19 (the draft version result was 184.65). These values in the Company's cost of service study will be updated in rebuttal testimony.

CA-IR-226

Ref: T-20, page 12, Allocation of Costs.

Please provide complete copies of the HELCO energy and demand loss studies relied upon to develop allocation factors used by Mr. Young in the embedded cost of service study.

HELCO Response:

Please refer to HELCO-WP-2001, page 81 and HELCO's response to CA-IR-39.

CA-IR-227

Ref: T-20, page 10, Classification of Production Costs.

a. Please explain Mr. Young's understanding of whether or not HELCO incurs any non-fuel production O&M costs that vary in relation to generation output (energy); and
b. Identify and quantify each type of energy-variable non-fuel production O&M cost, if any, by NARUC Account.
c. State the basis for classification of non-fuel production O&M expenses (demand vs. energy) by NARUC Account in the Company's cost of service allocations.
d. Provide complete copies of all studies and other information supportive of HELCO's proposed classification of non-fuel production O&M expenses.

HELCO Response:

a. It is Mr. Young's understanding that the determination of the test-year estimates of non-fuel production O&M expenses are based on activities related to the operation and maintenance of the generation plant facilities. HELCO has not made a determination of the share of recorded expenses in each NARUC production O&M expense account (other than fuel) that is variable in relation to kWh generation.

b. See HELCO's response to part (a) above.

c. All of the non-fuel production O&M expenses are classified as demand-related in HELCO's cost of service study. As has been discussed in other dockets to which the Consumer Advocate is a party, production O&M generally does not vary directly with kWh generated. Steam units have very little variable O&M expenses, while diesel and combustion turbine overhaul costs tend to vary based on run hours or adjusted run hours (taking into account the number of starts) rather than based on kWh generated.

d. There are no additional studies or documents associated with HELCO's classification of non-fuel production O&M expenses as demand-related in HELCO's cost of service study.

CA-IR-228

Ref: T-20, page 13, Utilization of Marginal Costs.

Please state which specific values contained within "The results of the Marginal Cost Study were considered in the rate design process" and indicate how each such value was interpreted and applied in the design of each (identified) rate element.

HELCO Response:

The Marginal Energy Costs shown on HELCO-2012, page 1 were considered in the rate designs of energy charges for Rider T (as applied to Schedule J and to Schedule P), Schedule U, Schedule TOU-R, Schedule TOU-G, Schedule TOU-J, and Schedule TOU-P. The proposed rate designs were set such that the energy charges in these proposed rates exceed the marginal energy costs for the respective time of use periods.

CA-IR-229

Ref: T-20, page 15, Inclining Block Residential Rates.

Please state whether Mr. Young, Mr. Orans or HELCO are aware of any Hawaii regulated utilities that charge inclining block residential rates and, if so, identify the utility and the Commission order approving same.

HELCO Response:

We are not aware of any Hawaii regulated utilities that charge inclining block residential rates.

CA-IR-230

Ref: T-20, page 13, Inclining Block Residential Rates.

Please explain in detail each of the reasons why HELCO is not proposing inclining block rates for Schedule G, J or P customer rates, given the various reasons stated for implementation of inclining block rates for residential customers.

HELCO Response:

There are several reasons why HELCO is not proposing inclining block rates for Schedules G, J, or P. For example, the existing commercial rate structure for Schedule J and Schedule P is a load factor rate, which does not convert readily to an inclining block rate. The load factor rate charges for energy are based on the ratio of the customer's kWh to billed kW; there are lower energy charge rates for efficient consumption, i.e. maintaining a higher load factor. An inclining block commercial rate would remove the incentive for efficient consumption and possibly assign significantly increased costs to the largest users, many of which are high load factor customers now. In addition, there is great diversity of energy usage among commercial customers, so it would be difficult to set the size of the energy block tiers fairly. In contrast, residential usage centers around water heating, lighting, cooking, and cooling, and all residential customers generally have these requirements, though the magnitudes of these requirements vary across customers. Further, there are specific facts and circumstances that warrant the application of a tiered rate structure to HELCO's residential rates.

CA-IR-231

Ref: T-20, page 18, Impact of Proposed Minimum Bill.

Please explain and provide statistical data depicting the number of residential customers who will be billed both for usage in the highest new tail block rate and for higher charges under the proposed new 15% minimum bill provision, indicating the approximate annual revenue increase that would be collected from such customers.

HELCO Response:

Based on the data shown in HELCO-WP-302, page 10, there are approximately 1,182 customers who will be billed both for usage in the proposed highest tier of the non-fuel energy charge and for the minimum charge under the proposed 15% minimum bill provision, although customers who are billed at the proposed minimum charge are not simultaneously billed at the highest tier non-fuel energy charge in the same month. The proposed minimum bill provision adds approximately $96,886 to customer bills at proposed rates for customers with usages greater than 1,000 kWh per month. The Company did not estimate the difference between bills at the proposed rate structure and bills at present rates for individual customers, so the Company does not have an estimate for the impact of the proposed rate structure on customers who would pay the highest tier non-fuel energy charge at proposed rates.

CA-IR-232

Ref: T-20, pages 22 and 28, Impacts of Proposed Schedule J and P KW Demand Qualification Changes.

Please explain and provide statistical data depicting the number of migrations and revenue impacts anticipated to result from changes to the Availability Clauses of Schedules J and P.

HELCO Response:

The test year estimates of customers and revenues do not assume any customer migration between Schedule J and Schedule P. The proposed changes to the Availability Clauses of Schedule J and Schedule P affect about 96 Schedule J customers (HELCO T-20, page 24) and about 7 Schedule P customers (HELCO T-20, page 29), all of whom will be allowed to remain on their existing rate schedules if the proposed changes in Availability Clauses are approved.

CA-IR-233

Ref: T-20, page 27, Impact of Closing Schedule H.

Please provide the following data regarding HELCO Schedule H:

a. Explain each element of what HELCO has identified that it needs to consider "in order to plan for a transition for the existing Schedule H customers.
b. Provide illustrative calculations of customer bill impacts that would result from closure of Schedule H with immediate migration to applicable surviving rate schedules.
c. With respect to the contemporaneous relocation exception to closing the rate, please explain and quantify what customer impacts are being avoided by this provision.

HELCO Response:

a. Some of the considerations in planning for a transition for the existing Schedule H customers include whether service should continue to be provided through two meters at the customer's location, what rate options the customer has, what are the bill impacts, and how to estimate the revenue impact by rate classes for rate case purposes.

b. The requested calculations are not available. The billing system does not have the data on the customer kW load that is excluded from billing on Schedule H, such as cooking and water heating loads that would otherwise be billed were the customer placed on Schedule J.

c. In the proposed closing of Schedule H to new customers, HELCO proposes to allow customers with existing Schedule H service to relocate their Schedule H service because they are in essence not new customers. This is a fair treatment of existing Schedule H customers since they all receive the Schedule H rate as long as the character of their energy usage remains the same regardless of service location.

CA-IR-234

Ref: T-20, page 38, Green Pricing Program.

Please provide actual 2004, 2005, 2006 to-date, and test year projected transactions by NARUC Account associated with the Green Pricing Program.

HELCO Response:

The requested summary of Green Pricing Program transactions is presented below.

Revenues	GL account 24240000
2004	$11,034.59
2005	$11,650.98
YTD 6/2006	$5,957.30

Expenditures	GL account 9302
2004	$4,627.37
2005	$ 0.00
YTD 6/2006	$27,262.80

HELCO has not made any projections of transactions for the Green Pricing Program for test year 2006.

CA-IR-235

Ref: T-20, pages 40-50, Proposed New Time of Use Rates.

Please provide a side-by-side comparison of each element of HELCO's TOU rate proposal to the existing HECO TOU rate schedules, indicating the reasons for any differences in rate structures between HELCO and HECO other than differences caused by changes in underlying costs.

HELCO Response:

The comparisons follow on pages 2 through 5 of this response. The proposed HELCO TOU-R differs from the proposed HECO TOU-R because it is based on the inclining block structure of the proposed HELCO Schedule R, including the same proposed minimum charge. In the proposed HELCO TOU-R, time of use energy usage is separately surcharged or credited. In the proposed HECO TOU-R, the energy charges reflect the time of use rates. The time of use periods in the proposed HELCO TOU-R are the same as the existing time of use periods as well as the same as in the other proposed HELCO TOU rates. The time of use periods in the proposed HECO TOU-R designate more off-peak hours on weekends and holidays based on an analysis of HECO recorded system hourly generation data from 1999 to 2003. The meter limit is smaller for the HELCO TOU-R because of fewer customers.

The proposed HELCO TOU-G and HELCO TOU-J are structured the same as their HECO counterparts except there are meter limits set for the HELCO rates in order to manage participation while collecting data for future time of use rate design offerings.

The proposed HELCO TOU-P is structured the same as the HECO Schedule U, except that the HELCO TOU-P has the meter limit and the HECO Schedule U has only a two period time of use energy charge. The HECO Schedule U is an existing rate that is re-positioned to offer a time of

use option to HECO Schedule PS, PP, and PT customers, while the proposed HELCO TOU-P offers a time of use rate option to HELCO Schedule P customers. The HELCO Schedule U, which is an existing rate option for both HELCO Schedule J and HELCO Schedule P customers, is proposed to be closed to new customers so that it does not compete with the new TOU rate options.

HELCO TOU-R	HECO TOU-R
Limit 300 customers	Limit 1,000 customers
Customer Charge Single Phase Service Threee Phase Service	Customer Charge Single Phase Service Threee Phase Service
Energy Charge First 300 kWh Next 700 kWh Over 1,000 kWh	Energy Charge Priority Peak per kWh Mid Peak per kWh Off-Peak per kWh
Time-of-Use Charges Priority Peak per kWh Mid Peak per kWh Off-Peak per kWh	
Minimum Charge $20.00 or bill calculated at current rate adjustments using 15% of the customer's highest billed kWh over the previous 11 billing months	Minimum Charge Single Phase Service $21.50 Threee Phase Service $25.50
Priority Peak 5pm-9pm Mon-Fri Mid Peak 7am - 5 pm Mon-Fri 7am - 9pm Sat Sun Off Peak 9pm - 7 am Daily	Priority Peak 5pm-9pm Mon-Fri Mid Peak 7am - 5 pm Mon-Fri 5pm - 9pm Sat Sun Hol Off Peak 7am - 5 pm Sat Sun Hol 9pm - 7am Daily Hol = New Years, Memorial Day, Independence Day, Labor Day, Thanksgiving and Christmas

HELCO TOU-G	HECO TOU-C Non Demand
Limit 100 meters	
Customer Charge	Customer Charge
Single Phase Service	Single Phase Service
Threee Phase Service	Threee Phase Service
Energy Charge	Energy Charge
Priority Peak per kWh	Priority Peak per kWh
Mid Peak per kWh	Mid Peak per kWh
Off-Peak per kWh	Off-Peak per kWh
Minimum Charge	Minimum Charge
Customer Charge	Single Phase Service $40
	Three Phase Service $60
Priority Peak 5pm-9pm Mon-Fri	Priority Peak 5pm-9pm Mon-Fri
Mid Peak	Mid Peak
7am - 5 pm Mon-Fri	7am - 5 pm Mon-Fri
7am - 9pm Sat Sun	7am - 9pm Sat Sun
Off Peak 9pm - 7 am Daily	Off Peak 9pm - 7 am Daily

HELCO TOU-J	HECO TOU-C Demand
Limit 50 meters	
Customer Charge	Customer Charge
Single Phase Service	Single Phase Service
Threee Phase Service	Threee Phase Service
Demand Charge	Demand Charge
Priority Peak kW per kW	Priority Peak kW per kW
Mid Peak kW per kW	Mid Peak kW per kW
Energy Charge	Energy Charge
Priority Peak per kWh	Priority Peak per kWh
Mid Peak per kWh	Mid Peak per kWh
Off-Peak per kWh	Off-Peak per kWh
Minimum Charge	Minimum Charge
Customer + Demand Charge	Customer + Demand Charge
Priority Peak 5pm-9pm Mon-Fri	Priority Peak 5pm-9pm Mon-Fri
Mid Peak	Mid Peak
7am - 5 pm Mon-Fri	7am - 5 pm Mon-Fri
7am - 9pm Sat Sun	7am - 9pm Sat Sun
Off Peak 9pm - 7 am Daily	Off Peak 9pm - 7 am Daily

HELCO TOU-P	HECO Schedule U
Limit 12 meters	
Customer Charge	Customer Charge
Demand Charge Priority Peak kW per kW Mid Peak kW per kW	Demand Charge Priority Peak kW per kW Mid Peak kW per kW
Energy Charge Priority Peak per kWh Mid Peak per kWh Off-Peak per kWh	Energy Charge On Peak per kWh Off Peak per kWh
Minimum Charge Customer + Demand Charge	Minimum Charge Customer + Demand Charge
Priority Peak 5pm-9pm Mon-Fri Mid Peak 7am - 5 pm Mon-Fri 7am - 9pm Sat Sun Off Peak 9pm - 7 am Daily	On Peak 9pm - 7 am Daily Priority Peak 5pm-9pm Mon-Fri Mid Peak 7am - 5 pm Mon-Fri 7am - 9pm Sat Sun Off Peak 9pm - 7 am Daily

CA-IR-236

Ref: T-20, pages 50-52, Proposed New REEPAH Clause.

Please provide the most detailed available projections of REEPAH program expenditures and revenue collections (base rate and clause recoveries) planned over the next three years.

HELCO Response:

HELCO has not made any projections of revenue collections and program expenditures for the proposed Renewable Energy and Energy Efficiency Program for Affordable Homes (REEEPAH) program. There are no proposed base rate revenue collections for REEEPAH; all program revenues would come through collections via the proposed REEEPAH clause.

CA-IR-237

What specific elements of the Company's revenue requirement and/or rate design proposals in this Docket are intended to provide benefits to LIHEAP participants or to other low income customer groups? Please list and quantify the value of each such element.

HELCO Response:

The proposed discount for customers receiving bill credits under LIHEAP is described at the bottom of HELCO-106, page 5, and the value is illustrated at proposed rates in HELCO-302, page 1 and at HELCO-WP-302, page 11.

CA-IR-238

Ref: HELCO-106, page 4, Firm Capacity Surcharge.

Please explain all reasons why HELCO has retained the Firm Capacity Surcharge in its proposed tariff, given no utilization of this rate in recent history, no planned capacity additions in the near future and a zero percent proposed rate in both existing and proposed rate levels.

HELCO Response:

The Firm Capacity Surcharge is retained in HELCO's proposed tariff to accommodate changes in purchase power payments for firm capacity to Puna Geothermal Venture and to any other future firm capacity independent power producer that occur between HELCO general rate cases.

CA-IR-239

Ref: HELCO Response to CA-IR-14, page 2.

According to the response, "What the REEEPAH would accomplish, however, is to enable HELCO to play a meaningful role in implementing effective solutions to problems of providing affordable housing, an issue which threatens the economic vitality of the Big Island." Please provide the following information:

a Explain each reason why HELCO, rather than other Big Island businesses or State or County governmental agencies, should "play a meaningful role" as indicated.

b. For what reason(s) is ratepayer funding of this "meaningful role" for HELCO believed to be appropriate? Provide copies of all documentation relied upon to support the Company's response.

c. Has the Company invested or contributed any shareholder funds to the support the development of affordable housing on the Big Island?

d. If your response to part (c) of this information request is affirmative, please provide an itemization by payee and amount of all shareholder contributions or funding in each of the past five years (i.e., 2001 through 2005).

e. What, if any, economic or other benefits to HELCO's ratepayers are expected to result from the proposed "meaningful role in implementing effective solutions."

f. Provide complete copies of all documents associated with your response to part (e) of this information request.

HELCO Response:

a. The primary purpose of REEEPAH is to support and work through affordable housing programs to reach the customers most impacted by rate increases, by offering options for customers to save on their bills. The Mayor of Hawaii County has asked HELCO as well as other businesses and government agencies to be a part of the solution to the problem, and HELCO thinks it is the right thing to do as one of the major businesses in the County of Hawaii. A letter from the Mayor of Hawaii County, Mr. Harry Kim, to document discussions that took place previously between the Mayor and Mr. Lee, is on page 2. Government also helps make energy costs of housing more affordable by offering tax credits to homeowners for solar water heaters and other efficient energy technologies.

Harry Kim
Mayor

Dixie Kaetsu
Managing Director

Barbara J. Kossow
Deputy Managing Director

County of Hawaii

25 Aupuni Street, Room 215 • Hilo, Hawai'i 96720-4252 • (808) 961-8211 • Fax (808) 961-6553
KONA: 75-5706 Kuakini Highway, Suite 103 • Kailua-Kona, Hawai'i 96740
(808) 329-5226 • Fax (808) 326-5663

September 7, 2006

Warren H.W. Lee, President
Hawai'i Electric Light Company, Inc.
1200 Kilauea Avenue
Hilo, Hawai'i 96720

Dear Warren:

This letter serves to document the informal discussions which you and I have had many times concerning the affordable housing crisis in Hawai'i County. Your leadership role at the Hawai'i Electric Light Company and as a member of the County's Workforce Investment Board gives you first-hand awareness of this situation, which is causing both economic and personal hardships for many of the County's residents and businesses. As such, increasing the number of affordable housing units has been one of the major undertakings of my administration.

Providing for affordable housing requires a concerted collaborative effort by many players. I have asked Hawai'i Electric Light Company (HELCO), developers, and others to assist the County in reaching the goal of making affordable housing more available. The County cannot do this alone.

I am appreciative of the Memorandum of Understanding between the County of Hawai'i and HELCO, executed in May of this year, which sets forth the broad goals of a collaboration to develop the Waikoloa Employee Housing Project as an energy-efficient and alternative power demonstration project .

I understand that, as part of HELCO's commitment to support this and other affordable housing projects, you have pending in your current rate case before the Public Utilities Commission a request to implement a program called the Renewable Energy and Energy Efficiency Program for Affordable Housing (REEEPAH). I am highly supportive of HELCO's initiative in this regard; therefore, please let me know if I can be of assistance in securing the Commission's approval of REEEPAH.

Aloha,

Harry Kim

Harry Kim
Mayor

b. HELCO is proposing to subsidize renewable energy and energy efficiency efforts by low income customers. Ratepayer funding is appropriate in this instance because the economic benefits of REEEPAH, as explained in HELCO's response to part e, are in the best interests of ratepayers.

c. To this date, no. As explained in HELCO's response to part b, a ratepayer-funded mechanism is appropriate. See also HELCO's answer to part e.

d. See answer to part c.

e. Ratepayers should benefit to the extent that affordable housing solutions as a whole succeed in averting a deterioration of the local economy. Economist Dr. Leroy O. Laney, in the First Hawaiian Bank's "Economic Forecast, Big Island Edition 2005-06" issued in September, 2005 presented data showing the rapid rise in housing costs on the Big Island over the past five years, and proposes that high housing costs would lead to a deterioration of the local economy. Here are some of Dr. Laney's statements that frame this argument:

"One fly in the ointment is concern over the escalating price of housing, leading to concerns about affordability for residents and newcomers alike."

"As home prices continue to rise, they escalate well beyond the reach of many who live and work on the Big Island, which is especially painful for new entrants to the market and those considering relocation here. Even more, it extends well beyond working class families into the professional ranks. *An economy cannot continue to function without many of these positions.*" [emphasis HELCO's]

"Because of the diversity of Hawaii County real estate, and the island's size and room for expansion, local concerns about affordability may be slightly less than on Maui and Kauai--where worries are truly becoming acute. *Yet one wonders about the longer term future of any*

economy in which those who make it run can't afford to relocate or stay here." [emphasis HELCO's]

Based on the economic evidence, if the costs of housing become unaffordable for working families, the economy may decline because there will not be a sufficient workforce to sustain it. Because electricity use is directly related to economic activity, in a declining economy electricity usage will decline, leaving fewer ratepayers and fewer energy sales over which to spread the fixed costs of providing utility electric service. Therefore HELCO believes electric rates would be higher than they would be in a vigorous economy. Therefore, it is in the ratepayers' direct interests that HELCO offer innovative options for customers to save on their bills. HELCO is open to suggestions to make REEEPAH work, and proposes to work with the Consumer Advocate to develop more detailed plans.

f. A copy of "Economic Forecast, Big Island Edition 2005-06" issued by First Hawaiian Bank, September, 2005, is on pages 5 through 8 of this response.

Big Island Edition 2005-2006

ECONOMIC FORECAST

First Hawaiian Bank

Big Island: Tourism, Construction, Job Creation Remain Strong

Spiraling Housing Prices Raise Concern: A Bubble, Or Not?

Again this year, the Big Island economy is hitting on all cylinders, entertaining 17% more tourists than in 2004, fueling extensive construction activity and creating jobs faster than the state as a whole, while leaving many employers struggling for qualified people to hire.

Forecasts for the Hawaii County economy in 2005 and 2006 project continued economic strength, but with some cooling off from 2004's heated pace. Both job growth and inflation-adjusted personal income growth will hover in the 2% to 3% range, and population growth should average just over 1%.

One fly in the ointment is concern over the escalating price of housing, leading to concerns about affordability for residents and newcomers alike.

On the Big Island as in the rest of the state, real estate continues to be the economic sector that's getting most of the attention. The Big Island's disparate geographic areas lead to a wide range of prices and markets. But as the chart above shows, price increases have been rapid everywhere.

Because of the diversity of Hawaii County real estate, and the island's size and room for expansion, local concerns about affordability may be slightly less than on Maui and Kauai – where worries are truly becoming acute. Yet one wonders about the longer term future of any economy in which those who make it run can't afford to relocate or stay here.

HOUSING: WIDE RANGE OF PRICES, BUT EVERYTHING'S HEADED UP

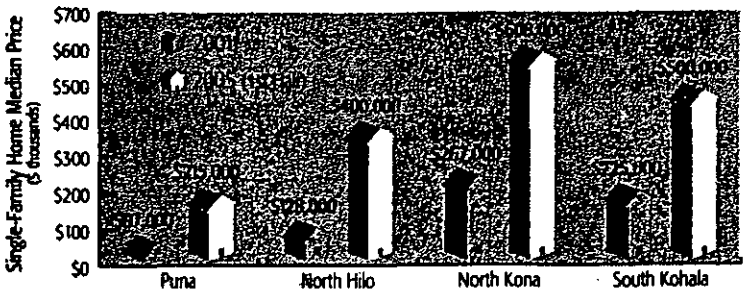

As home prices continue to rise, they escalate well beyond the reach of many who live and work on the Big Island, which is especially painful for new entrants to the market and those considering relocation here. Even more, it extends well beyond working class families into the professional ranks. An economy cannot continue to function without many of these positions.

There are some places on the Mainland where home prices even exceed those in Hawaii, and off-shore demand from these places feeds the run-up in prices here. Yet eventually affordability will bring the current real estate cycle to an end — hopefully with a soft landing. Hawaii is not the only place in the nation with a rising anxiety about a housing bubble, but it's certainly one of them. Because the Big Isle's desirable real estate is so inextricably linked to Mainland demand and prices, the run-up here may ease only when other desirable but inflated pockets there cool also.

As with any sharp run-up in prices in any market, there comes a time when we begin to question the sustainability of the rise. We are at that point with the housing market now in Hawaii.

There's a lot of money out there from affluent baby boomers nearing retirement that has to be placed somewhere. And as any single market emerges as a favorite — stocks, bonds, real estate, precious metals or whatever — there is often a tendency to overdo it.

In the initial phases of overvaluation, we begin to suspect it — but still have a fairly long list of reasons why "this time it's different." But if a market is overvalued, eventually adjustment will occur. Most of us remember times during the tech-stock boom of the late 1990s, or the

(continued on page 3)

Economic analysis by:

Dr. Leroy O. Laney *Economics Consultant to First Hawaiian Bank, Professor of Economics & Finance, Hawaii Pacific University*

U.S. Economy Has Slowed a Bit; State of Hawaii Continues to Do Well

As we recover from the last recession in 2001, the U.S. national economy has slowed down a little in recent months and a rapid pace, but its performance still results quite healthy. One drag, it is true, is higher energy prices, which seem to have not slowed the economy as much as in the past.

Because stock market performance has remained tepid, investors have turned to real estate and bonds as places to put their money. Rising bond yields have kept long-term interest rates, including those on mortgages, low in spite of Federal Reserve tightening over the last year or so. That has given demand for real estate and also contributed to strong home sales.

An emerging issue is the national and even global imbalance in spending in the national economy, mainly real. Chairman Alan Greenspan has attempted to allay such fears by alluding merely to signs of strain in some regional areas, but other analysts are quite concerned, worried.

The State of Hawaii economy also continues to do extremely well in most ways, including financial performance. Inflation-adjusted personal income growth for the state (*the bar chart at right*) reached 5.4% last year. That number may fray a little in 2005, and 2006, but it should still remain well in positive ground.

State job growth (*see the chart, far right*) has been healthy but is likely to level off some as supply constraints kick in. The jobs are there but we just don't have people to fill them. If anything slows the current local expansion, it is likely to be the availability of employable people.

One good gauge of the tempo of the state economy is credit card spending growth from First Hawaiian Bank's own merchant customers. It includes both tourist and local spending. There has been some slowdown in growth rates of that spending in the early months of this year, down from the heated pace of 2004. This could be preliminary evidence of some slowing in the economy. But growth rates are still quite respectable.

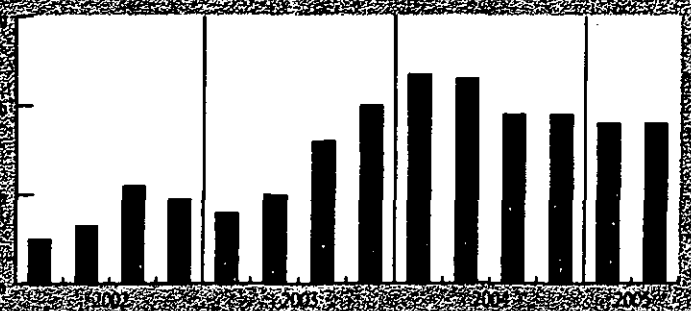

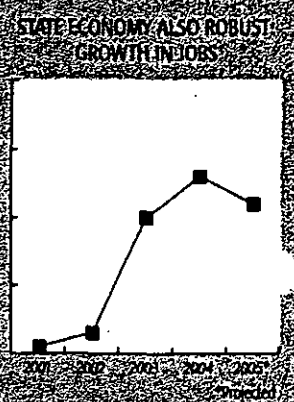

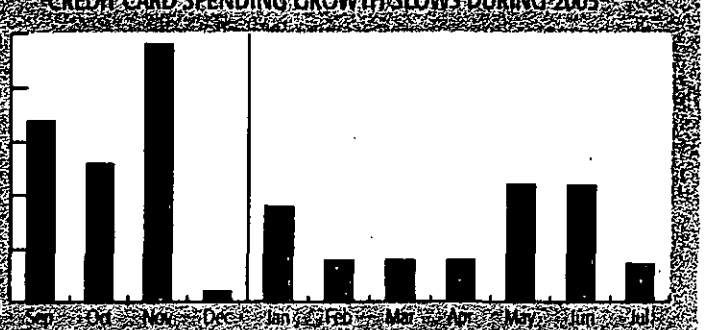

Big Island Remains Strong

(continued from page 1)

...l real estate boom of the late 1980s that was fueled by Japan's bubble, when thoughts like that occurred to us. That's the time to take caution and be realistic.

In real estate, of course, downward corrections usually aren't as sharp as in financial markets. But they can make a difference. In the 1990s, those who bought at the top of Hawaii's previous real estate boom were punished — and it contributed to one of the worst decades for our economy in modern times.

The fact that much of the demand for Hawaii real estate is now coming from the Mainland U.S. won't save us. An adjustment in higher-priced markets there would almost surely have some sympathetic effect here. And more national forecasters are pointing to an overpriced housing market. Almost no one is forecasting a national recession, but a drop in spending on homes almost always plays a role in a national downturn.

Economics 101 teaches that the only way to effectively bring down the now exorbitant home prices is to increase supply. In that regard, the Big Island is luckier than the other Neighbor Islands, because there is more room for additions to supply. Of course, adverse legal developments — such as the Hokulia case still under litigation — don't help any, because they add up to an uncertain investment climate that no developer wants to deal with.

Yet inevitably, growth will occur in Hawaii County to some degree.

Big Island Labor Market Tightening Across All Sectors

We see the same tight labor market on the Big Isle that we see at the state level, as the chart below shows. Unemployment rates have fallen steadily as demand for labor in practically all major sectors of the economy has risen. The indigenous labor supply can't meet the demand, and increasing costs of living — especially housing costs — keep a lid on in-migration.

Big Island unemployment is still slightly higher than the state as a whole, which is the lowest in the nation, but the gap is closing. The estimated unemployment rate on the West side is below 1%, with all sectors having difficulty filling open positions at every level.

The county's heated economy has created jobs faster than the state in recent years, but the labor supply constraint is apparent in the slower growth pace in the chart below.

HELCO Power Sales Track Growing County Economy

Power usage is usually a good measure of economic activity at the county level. The chart above shows the boom years of the late 1980s, the slump of the mid-1990s, the effect of 9/11 and the return to healthy growth in recent years.

Hawaii Electric Light Co. projections for power consumption this year and next are just under 3%, which agrees with our outlook for growth in the overall economy.

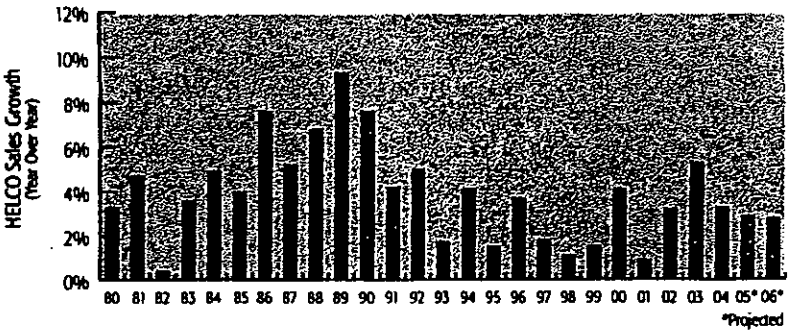

Big Island Visitor Industry: Another Banner Year in '05

The Big Island visitor industry has been having an extremely good year so far in 2005, with total arrivals up 17% through June. Both domestic and international arrivals have been strong, and visitor spending was up 23% over the same period.

There are several things worth noting this year in the tourism sector:

- The Sheraton Keauhou Bay Resort & Spa opened last fall after extensive renovations to the old Kona Surf.
- The Naniloa Hotel in Hilo could get major renovations with the state's truncation of the existing lease.

(continued on page 4)

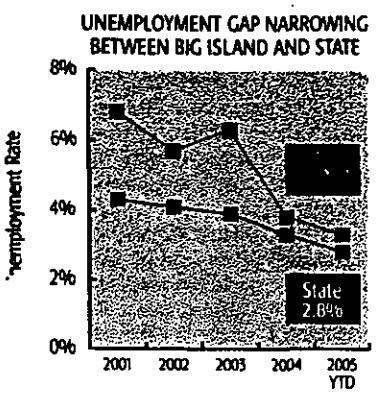

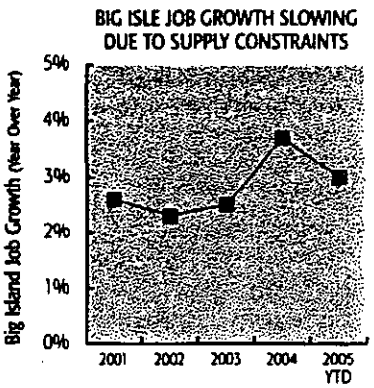

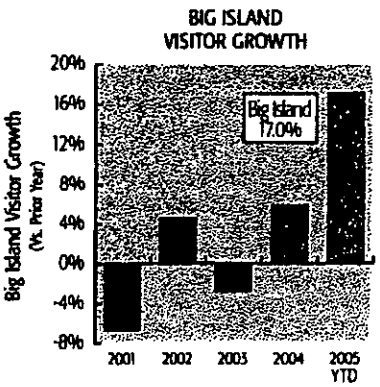

Big Island Remains Strong

(continued from page 3)

CRUISE SHIP BUSINESS GROWING IN IMPORTANCE

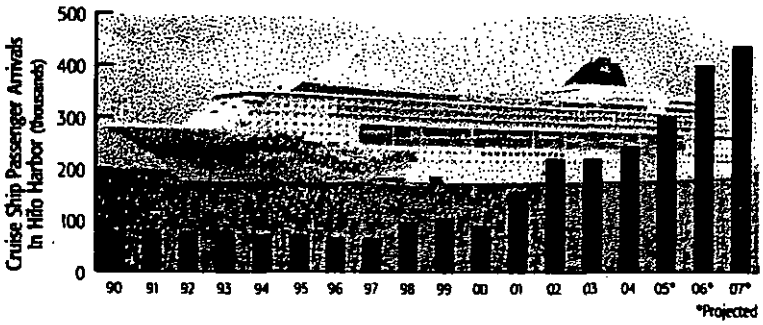

The Pride of America, the largest U.S.-flagged cruise vessel ever, joined the Pride of Aloha on the inter-island circuit this July, and another such 2,000-passenger, 1,000-crew vessel is expected in May 2006.

Tourism retailing is another important component of the Big Isle visitor industry, and one coming addition there is the 83,000-square-foot Shops at Mauna Lani, now under construction.

Construction Industry Is Hot On All Islands Statewide

The construction sector seems to be hot everywhere nowadays, and the Big Island is certainly no exception. Strong external and local demand, continued low interest rates, and a strong economy generally fuel the building boom. Those in the industry expect the current pace will continue for at least another couple of years. The labor shortage is most acute in this sector.

In the fiscal year ended June 30, 2005, Hawaii County issued 4,338 residential permits with a total value of $565 million. The permits were concentrated, as usual, in North Kona and South Kohala (33% by number, 54% by value) and Puna (38% by number). In that same fiscal year, $245 million in commercial construction and $86 million in public construction were authorized.

With so much development, infrastructure struggles to keep up — but it seems to be a losing battle. Work continues on the Saddle Road connecting the two sides of the island, but traffic congestion in Kona has reached gridlock proportions.

In Hilo, there is visible progress on such projects as the State Judiciary Complex, the Veterans Home next to Hilo Medical Center, and the new Home Depot.

UH-Hilo Campus Increasing Its Economic Contribution

UH Hilo has increased its economic contribution to East Hawaii in recent years, and much more is on the way:

- In 2004, a College of Pharmacy was approved by the Board of Regents, with the first class to start in 2007.
- Grant funding has grown from $3 million in 1998 to an estimated $18 million in 2005, a 600% increase.
- A planned China-U.S. Center is slated to include student housing, a commercial plaza, a University Inn, plus classrooms and conferencing facilities.

One of the biggest constraints on UH-Hilo growth now is student housing. The school has targeted 5,000 students as an optimal size, up from the current 3,300.

Another coming development is a new Community College campus, two miles from the current one. And plans continue for a West Hawaii University Center to replace the current facility in small, leased space in a Kealakekua shopping center.

At the UH-Hilo University Park, the Mauna Kea Astronomy Education Center should open in December 2005. Its exhibit hall, blending astronomy and Hawaiian culture, should prove to be a desired stop for visitors, including cruise passengers, as well as residents.

Agriculture Still Important To Big Island Economy

Agriculture is more important in Hawaii County than anywhere else in the state, and it's now more diverse. Some expectations for 2005:

- Kona coffee should see a better crop this year than last, with better weather conditions.
- Macadamia nuts may be affected by discovery of a scale insect that can kill healthy trees and reduce yield.
- New residential construction is increasing demand for nursery products and landscape plants.
- Cattle prices remain high, with Canadian imports cut off. The possible lifting of a ban on cattle shipments to Japan should also buoy prices to levels ranchers can live with.

Parker Ranch is committed to cattle and a working ranch concept, but has been diversifying out of land to increase return. This summer, it put its Shopping Center in Waimea on the market. It has also been selling land that's leased back to the ranch for cattle grazing. The ranch also leases land for timber, and the eucalyptus there is about ready for harvest.

Future of Keck Telescope Being Closely Watched

The big item in Big Island astronomy remains the closely watched KECK telescope project, which has been challenged on cultural and environmental grounds. The project got its permit in November 2004, but objections are still being raised.

Ultimately, the UH Board of Regents must give the go-ahead, and that's a slow process. Observers in the industry emphasize that ultimate failure of the project will cast a shadow over future astronomy projects in Hawaii.

Who Would Have Thought? Sea Water Sale is Big Business

The big industry at the Natural Energy Lab (NELHA) at Keahole Point continues to be bottling desalinated deep sea water for export — a lucrative, very high margin business.

The original Japanese firm, Koyo, is in the process of doubling its production. A U.S. firm, Deep Sea Water International, started up this summer with designs on the U.S. market. And another Japan firm, Hawaii Deep Marine, plans to export the water in bulk containers to Japan where it will be bottled.

NELHA also is still a home for more traditional enterprises — in aquaculture and health care, for example. If oil prices remain high, maybe even its original purpose — alternative energy creation — will be resurrected at some point.

CA-IR-240

Ref: HELCO Response to CA-IR-14, page 2.

According to the response, "Further, it has been brought to HELCO's attention that increasing *concerns about rising electricity prices in other states have led to consideration of renewable* energy and energy efficiency programs intended to mitigate the bill impacts of rate increases versus the acquisition of DSM resources." Please provide the following information:

a. What, specifically, has been "brought to HELCO's attention" about activities and programs in each other state that is being referenced?

b. Provide complete copies of all documents associated with your response to part (a) of this information request.

c. Identify and describe with specificity each program comparable to REEEPAH that HELCO believes has been implemented in Hawaii or any "other state."

d. Provide complete copies of all documents associated with your response to part (c) of this information request.

HELCO Response:

a. Specifically, HELCO's consultant Global Energy Partners (GEP) brought this to HELCO's attention, based on their knowledge of energy efficiency programs on the mainland U.S. GEP performed some research for HELCO to identify activities and programs in several other states in which utilities considered energy efficiency and renewable energy programs to mitigate the bill impacts of rate increases.

b. Following is the summary table provided to HELCO by Global Energy Partners:

Area/Utility	Rate increase experience	Actions for mitigating rate increase impacts
Puget Sound Energy	Filing for an average electric rate increase by 9.2 percent	• PSE General Rate Case (filed on Feb 15, 2006) requests a new, performance based incentive to increase investments in energy efficiency. This creates a financial reward for PSE, beginning 2007, if it meets or exceeds its energy savings targets. • PSE is proposing three new DSM pilot projects. • It is increasing investment in wind power facilities.
Aquila		• Utility pledged full support of the National Action Plan for Energy Efficiency, an initiative unveiled in San Francisco during the summer meeting of the National Association of Regulatory Utility

		Commissioners (NARUC). The Action Plan provides options to encourage greater energy efficiency. • Aquila plans to expand energy efficiency efforts in four other states, apart from Missouri.
Maryland utilities	Electricity rate increase likely to be 72 percent	• Legislation introduced to temper the bite of the rate increase and help consumers save energy, and reduce their bills. • The bill, SB 1104, calls for the procurement of energy efficiency measures for Standard Offer Service electric consumers. It proposes a market-based approach for procuring energy efficiency when it is cheaper than purchasing electricity.
Florida Power & Light	All customers are experiencing electricity bill increases, beginning January 2006.	• Providing extra thrust in helping customers to manage energy use. Key among these are- energy surveys to identify appliance inefficiencies; rebates for energy efficiency upgrades; incentives to install high efficiency cooling and heating systems for homes; incentives for customers voluntarily choosing to participate in Load Cycling programs.
Alliant Energy (Interstate Power & Light)	On June 30, 2006 IP&L implemented changes to Iowa customers' electric rates.	• IP&L is offering two options for mitigating the impact of these rate changes on the consumers' electric utility bill- these are Time-Of-Day pricing program and Electric Energy Efficiency programs. • The Time-Of-Day pricing program provides incentives for shifting energy use from peak to off-peak hours. • Energy efficiency programs include a free energy audit, as well as cash rebates or low interest financing for purchase of qualifying energy efficient equipments.
Maine utilities		• Efficiency Maine is the state's portfolio of energy conservation programs for all customer classes. The annual budget for the conservation programs is being increased over the next five years, in order to help consumers keep pace with rising electric rates.
Duke Energy		• Duke Energy supports the National Action Plan for Energy Efficiency • It has committed over $70 million over the next five years for the installation of energy efficient appliances, weatherization, and alternate rates that encourage energy savings. These measures will help consumers fight rate increases.
AmerenUE	Filing includes a proposed average increase in electric	• During the rate review process, the company has committed to develop low income energy assistance and energy conservation programs to help address

	rates of 17.7 percent	customers' needs. • Proposing to develop at least 100 MW of wind power. • Plans to launch a voluntary program allowing customers to support additional development of wind power and other forms of renewable energy.
Vermont		• Efficiency Vermont (funded through surcharge on electricity bill) plans to increase it's budget by 75 percent over the next few years to counter retail rate increases.
Southern California Edison	Rates increased by approximately 15% in early 2006 and will rise an average 2% this fall.	• In order to help residential customers to deal with rising rates- SCE is going to implement the largest package in its history of financial rebates to help customers switch to more energy-efficient homes and business devices. • In order to counter high rates, SCE supported requests from consumer groups that the utility return to a five-tier rate structure that was implemented in 2001, that will help reduce costs for many mid-use families.

c. HELCO is not aware of any program similar to REEEPAH either in operation or proposed.

d. See answer to part c.

CA-IR-241

Ref: HELCO Response to CA-IR-14, page 2.

According to the response, "HELCO wishes to provide, through REEEPAH, a flexible package of energy efficiency options exclusively to developers of affordable housing which cannot be provided within the context of DSM energy efficiency programs." Please respond to the following:

a. Identify each element of REEEPAH that HELCO believes "cannot be provided within the context of DSM energy efficiency programs.

b. For each of the elements identified in your response to part (a) of this information request, explain the reasons why that element cannot be provided within the context of the DSM energy efficiency programs that are offered, or are proposed to be offered by the Company.

HELCO Response:

a. Providing assistance to developers of affordable housing projects to incorporate renewable energy facilities, particularly solar photovoltaic systems, within the affordable housing communities, is an element of REEEPAH which cannot be provided within the context of DSM energy efficiency programs. Also, providing assistance to developers of affordable housing projects to incorporate energy efficiency measures, particularly solar water heating systems, specifically within the affordable housing communities and at assistance levels that exceed the incentive co-payments of the existing REWH program, is an element of REEEPAH which cannot be provided within the context of DSM energy efficiency programs.

b. Renewable energy facilities cannot be provided within the context of the DSM energy efficiency programs that are offered, or are proposed to be offered by the Company, because renewable energy facilities do not fall within the definition of DSM energy efficiency programs. The energy efficiency programs that will be included in REEEPAH will not preclude affordable home customers from participating in the DSM energy efficiency programs that are offered, or are proposed to by offered by the Company. Rather, affordable home customers will be able to

participate in both REEPAH and HELCO's DSM energy efficiency programs that are offered, or are proposed to be offered by the Company

CA-IR-242

Ref: HELCO T-1, page 22, low income energy assistance.

According to the testimony, "Some of the options that the Company is considering for this program include a residential solar water heating grant program, a customer assistance program that provides photovoltaic system installation in affordable housing developments and consultation to customers wishing to participate in HELCO's NEM program and a program that would buy down the cost of solar water heating systems that would be leased to lower income homeowners." Please respond to the following:

a. Provide complete copies of all documentation associated with HELCO's identification and evaluation of each of the options being considered as part of the REEEPAH program, including those mentioned in the quoted testimony.

b. Identify and describe the capabilities of each third party vendor that could be used under each option being considered by HELCO, indicating how HELCO intends to select its allied vendors from among alternative sources of supply.

c. Explain and quantify the extent to which each of the options referenced in this testimony are presently available from vendors to consumers or developers in the marketplace and how HELCO's involvement may change consumer access to such option.

HELCO Response:

a. A draft of a solar water heating grant program is attached as pages 3-7. A description of a customer assistance program that provides photovoltaic system installation in affordable housing developments was previously provided in HELCO's response to CA-IR-106 (see HELCO's reponse to CA-IR-106, pager 5 of 12). A draft outline of a program to provide consultation to customers wishing to participate in HELCO's NEM program is attached as pages 8-9. Finally, a program that would buy down the cost of solar water heating systems that would be leased to lower income homeowners was considered, but HELCO is no longer considering this program. HELCO is therefore not providing any documentation on this program.

b. As HELCO envisions REEEPAH, it would be the responsibility of the developer of the affordable housing project to select vendors to install solar water heating and other energy-efficiency measures in affordable housing projects. For the NEM assistance element, HELCO has not evaluated the capabilities of third-party vendors, but licensed professional electrical

engineers or the consulting engineering firms that employ licensed professional engineers and which provide consulting engineering services within the state of Hawaii should have the capability to analyze the technologies, installation costs, and economic feasibility of net-energy-metered systems. HELCO would select either one or multiple vendors by qualifying them to provide a standard set of services at a fixed price.

c. Services to evaluate customer-sited renewable energy systems that can be inter-connected as net energy metered facilities can be obtained for a fee in the state of Hawaii from a licensed professional engineer or consulting engineering firms that employ licensed professional engineers and which provide consulting engineering services within the state of Hawaii. HELCO currently has approximately 38 net-metered energy systems connected to the grid, for which the customers who installed them would have required engineering services to evaluate, design, and obtain permits. HELCO's involvement would both increase the awareness of NEM technologies on the part of affordable housing owners, and also make it more affordable to evaluate the feasibility of these technologies, thus lower the barriers to customers' consideration of this option.

Solar water heater installations are available to consumers and developers through plumbing contractors on the Big Island. Many of these contractors are already participants in HELCO's Residential Efficient Water Heating (REWH) program, and homebuyers of affordable housing projects currently have access to the $1,000 co-payment that is available within the REWH program. HELCO is proposing with REEEPAH to further subsidize solar water heater installation costs specifically for affordable housing.

RENEWABLE ENERGY AND ENERGY EFFICIENCY PROGRAM FOR AFFORDABLE HOUSING

DRAFT PROGRAM RULES – 8/4/06

SUMMARY: HELCO is establishing a program for making grants available to developers of residential affordable housing new construction projects to purchase renewable energy systems and energy efficiency measures that will be incorporated into the project. This program will help to reduce energy costs and consumption.

Note: Some of the values and time periods in this draft are just placeholders that are subject to change.

Outline:

A. Guidelines
   1. Applicants may apply for one grant per fiscal year, per housing project.
   2. HELCO reserves the right to fund all, some, or none of an application at its discretion, based on availability of funds, project eligibility, and merits of the application.
   3. Applicants may apply for grants in subsequent years.
   4. The amount of grant funds that will be made available to an eligible project shall not exceed x% of net total eligible project costs. Eligible project costs are the net cost (minus utility rebates and/or tax credits) of labor and material that are an integral and necessary part of the renewable energy system or energy efficiency measure.
   5. Applications will be accepted and awarded on a rolling, first-come, first-serve basis. Program applications will be accepted starting on January 1 until December 31.

B. Eligibility Requirements
   1. **Applicant eligibility.** To receive a grant, an applicant must meet each of the criteria, as applicable, as set forth:
      i. Individuals must be citizens of the United States (U.S.) or reside in the U.S. after being legally admitted for permanent residence.
      ii. Entities must be at least 51 percent owned, directly or indirectly, by individuals who are either citizens of the U.S. or reside in the U.S. after being legally admitted for permanent residence.
      iii. Applicants and owners will be ineligible to receive funds under this subpart
         1. If an applicant or owner has an outstanding judgment obtained by the U.S. in a Federal Court (other than in the United States Tax Court), is delinquent in the payment of Federal income taxes, or is delinquent on a Federal debt, the applicant is not eligible to receive a grant, direct loan, or guaranteed loan until the judgment is paid in full or otherwise satisfied or the delinquency is resolved.
         2. If an applicant has been debarred from receiving Federal assistance, the applicant is not eligible to receive a grant, direct

loan, or guaranteed loan under this subpart.

iv. An applicant that has received one or more grants and/or loans under this program must make satisfactory progress, as determined by HELCO, toward completion of any previously funded projects before it will be considered for subsequent funding.

2. **Project eligibility.** For a renewable energy system or energy efficiency improvement project to be eligible to receive a grant, the proposed project must meet each of the criteria, as applicable:

   i. The project must be for the purchase of a renewable energy system or to implement energy efficiency measures in residential new construction developments.

   ii. The project must have technical merit, as determined by HELCO.

   iii. The applicant must be the owner of the project and control the revenues and expenses of the project, including operation and maintenance. A third-party under contract to the owner may be used to control revenues and expenses and manage the operation and/or maintenance of the project.

   iv. The proposed project is scheduled to be completed within 24 months after entering into a grant agreement. HELCO may extend this period if HELCO determines, at its sole discretion, that the applicant is unable to complete the project for reasons beyond the applicant's control

   v. Housing project must be a residential new construction project located on the Island of Hawaii that will be serviced by HELCO.

   vi. Housing project must satisfy the County of Hawaii's affordable housing policy (Chapter 11, Article 1), and comply with applicable County of Hawaii ordinances.

   vii. Applicant must allow HELCO or designated representative access to project to inspect and verify proper installation of renewable energy/energy efficiency measure.

C. Applications

1. Applicants may only submit one application for each housing development per fiscal year. One original and one complete copy of the application are required.

2. Applicants may choose to submit either a "full application" or a "simplified application" as described below.

3. Each application must include a Table of Contents with clear pagination and chapter identification.

4. **Full Application** -- Full application content addresses the following:

   i. *Project Summary.* Provide: a brief description of the housing project (location, target median income rental/owner, number of units, type of units); a concise summary of the project proposal and applicant information; project purpose & goals; and amount of funds being requested. This may include a description of how the Project Eligibility criterion is met. Applicant may also wish to include a brief timeline of project activity and projected end date. Additional project description

information may be requested by the HELCO later in the application process. Applicant should also be prepared to provide a description of how the funds requested will be used and allocated if more than one renewable energy/energy efficiency project is being pursued.

ii. *Applicant eligibility.* Applicant may be requested to describe how each of the applicable criteria identified is satisfied.

iii. *Self-Evaluation Score.* Applicant is to self-score the project using the evaluation criteria provided. To justify the score, submit the total score along with explanation for points allocated. Provide specific references to information elsewhere in the application, as needed.

iv. *Project economic assessment.* Describe the financial performance of the proposed project. The description must address project costs, energy savings, and revenues, including applicable credits and incentives. Describe how much (percentage) of total project cost will be funded by grant.

5. **Simplified Application** should address the following:

i. Brief description of housing project (e.g. name, location, number of units, type of units, target sale/rental price median.)

ii. Project summary shall provide:

1. Specific type of energy efficiency/renewable energy measure that will be on each unit. HELCO may request that you provide schematics or specification sheets with further details at a later point in the application process.
2. Verification that the project and applicant eligibility requirements have been met
3. Timeline of renewable energy/energy efficiency implementation and projected end date.
4. Comparison of the Energy Factor (for high efficiency appliances) OR comparison of kW used by proposed Energy Efficiency measure versus Energy Factor/kW used by comparable non energy-efficient model or alternative.

iii. Calculation of Funds Requested

1. on a spreadsheet or document, show:
   a. Approximate per unit net cost of the renewable energy/energy efficiency measure as quoted by retailer/supplier/manufacturer/sub-contractor
   b. Approximate per unit net cost of comparable [standard] non-renewable energy/energy efficiency measure, as quoted by retailer/supplier/manufacturer/sub-contractor.
   c. Difference in per unit net cost between renewable energy/energy efficiency measure and non-renewable energy/energy efficiency measure

d. Difference in cost * 50% * number of homes/units that will include the renewable energy/energy efficiency measure.
e. OR, in other words:
[(a) – (b)] = (c)
(c) x [50%] x [# of units] = straightforward calculation of funds requested.

iv. Describe estimated life of measure; estimated energy savings and utility bill savings for end user; and estimated years to system payback.

6. At HELCO's request, you may be asked to submit additional documentation. This may include, but is not limited to:
   i. *Technical Reports or Specification Sheets* for the proposed technology and/or efficiency measure.
   ii. *Financial Information* about the Project's estimated cost and applicant's availability of funds.
   iii. *Interconnection Agreements.* Applicants are not required to submit interconnection agreements with their applications, but maybe required to discuss the interconnection agreements, if applicable to their project.
   iv. *Agreements and permits.* Demonstrate that the applicant is familiar with the regulations and utility policies and that these arrangements will be secured in a reasonable timeframe.

D. Criteria / Evaluation of Applications

1. *General review.* HELCO will evaluate each application and make a determination as to the eligibility of the applicant and the eligibility of the proposed project.
   i. *Ineligible applications.* If either the applicant or the project is ineligible, the Agency will inform the applicant of the decision. No further evaluation of the application will occur.
2. In determining the amount of a grant awarded, HELCO will take into consideration the following:
   i. The type of renewable energy system to be purchased;
   ii. The estimated quantity of energy to be generated by the renewable energy system;
   iii. The amount of energy savings expected to be derived from the energy efficiency measure;
   iv. The expected environmental benefits of the renewable energy/energy efficiency system;
   v. The estimated length of time to payback. (i.e. How long it would take for the energy savings generated by the measure to equal the net cost of the measure.)
3. HELCO reserves the right to fund all, part, or none of the applicant's request at its discretion.

Other items that are still under consideration:

1. Insurance requirements and/or proof of insurance certificates
2. Terms of Agreement letter
   i. The prime applicant is solely responsible and accountable for successful delivery of the project to the future homeowner/renter. This includes warranty on the renewable energy/energy efficiency measure.
3. *Self-Scoring.* Applicants shall conduct a self-evaluation of their project using the same evaluation criteria that the Company will use. Allocation of points & weighing of criteria needs to be considered further. Sample
   i. Technically feasibility / technical merit 20 points
   ii. Economically feasible 10 points
   iii. Amount of energy created / conserved (total kW created/conserved * 1 point) max of 25 points
   iv. Cost sharing (i.e. Developer help pay some of the cost of the measure…x% cost share gets full points.) 15 points
   v. Environmental benefits 5 points
   vi. Benefit to future homeowners/residents of project. 10 point
   vii. Price of homes/rent & target median threshold. (E.g. project falls in the 140% of median income category gets 0 points; project that falls in the 100% of median income category gets 10 points; project that is in the 60% of median income category gets 25 points, etc.)
4. *Project completion.* The project is complete when the applicant has provided a written final project completion notice acceptable to HELCO. Upon notification of receipt of an acceptable project completion report, the applicant may request grant reimbursement. HELCO reserves the right to inspect the project to verify installation has been satisfactorily completed according to specification. The applicant agrees not to request reimbursement from funds obligated under this program until after project completion, including any operational testing or certification required by HELCO.
5. *Exception authority.* The company may, on a case-by-case basis, make an exception to any requirement or provision of this subpart that is not inconsistent with any authorizing statute or applicable law, if HELCO determines that application of the requirement or provision would adversely affect the company's interest.

Net Energy Metering (NEM) Customer Assistance Program
DRAFT 4/12/06

Description:

- The Net Energy Metering (NEM) Customer Assistance Program will provide additional information to potential NEM customers to assist them to make decisions on whether to install net energy metering systems at their facilities.

Program Scope:

- Develop web-based renewable energy calculator/estimator for customers or staff to conduct initial screening.
- Provide renewable energy site assessment to residential or small business (under 25,000 square feet) customers.
- Initial (first year) program will focus on PV only. Program can expand to other renewable technologies in later years.

Eligibility:

- Must be current customer of Hawaii Electric Light Company, Inc.
- Must participate in initial screening to discuss site assessment needs.

Site Assessment Features:

- Basic analysis of customer's energy needs
- Recommendations on energy efficiency (although not intended to be a comprehensive energy audit)
- Evaluation of renewable energy at the site (i.e., solar zone rating, shading, solar orientation of building, etc.)
- Estimated potential savings
- Estimated output of system
- Recommendation on location of system
- General cost estimate of system
- Next steps to take toward system installation
- End-product of site assessment will be written report to be provided to customer and HELCO

Program Cost Estimates:

- Development of web-based calculator/estimator $50,000 (first year only)
- Administrative labor $50,000
- Customer feasibility studies (150 x $1000) $150,000

- $1000 cost estimate was obtained from a local energy consultant as a ballpark estimate. Cost is based on minimum of 3 sites per visit.

Potential Barriers:

- Allowable NEM contribution is 985 kW (based on 0.5% of 2005 system peak). HELCO has currently fulfilled approximately 12% of this contribution since total NEM installed capacity is 119.34 kW.

- Need to get buy-in from renewable energy hardware suppliers, particularly PV suppliers. In the past, PV suppliers have felt that the utility overestimated the cost of PV hardware. We should get their buy-in on the cost numbers used for the estimates in the site assessments.

Additional Info:

- The Wisconsin Energy Conservation Corporation is a public-private partnership that has operated a net energy metering customer assistance program since about 2002. Per the Director of Renewable Energy Programs, Don Wichert, the Corporation has done approximately 750 assessments since they started their program and they anticipate doing about 300-350 this year. He says the demand for assessments has been increasing since the Hurricane Katrina disaster started affecting prices in Wisconsin. The program gets site-specific information to their customers but it has also helped the state to build an infrastructure of renewable energy professionals who are able to do assessments as well as installations.

DRAFT 4/12/06

CA-IR-243

Ref: HELCO-105, Pages 10, 15 "Power Factor.

Please provide the following information regarding the "Power Factor" provisions within the Company's current tariff:

a. Explain the basis for the statement, "The above energy and demand charges are based upon an average monthly power factor of 85%."
b. State whether any cost of service analyses or other studies exist to support the statement quoted in part (a) of this information request.
c. If your response to part (b) of this information request is affirmative, provide complete copies of all such analyses/studies.
d. Explain the origin of and basis for the 0.10% energy/demand charge adjustment per 1% deviation in actual power factor, relative to the 85% value quoted in part (a) of this information request.
e. State whether any cost of service analyses or other studies exist to support the 0.10% energy/demand charge adjustment rate per 1% deviation in actual power factor.
f. If your response to part (e) of this information request is affirmative, provide complete copies of all such analyses/studies.
g. Identify and quantify the relevant costs incurred by HELCO in connection with leading/lagging reactive power.
h. Explain whether HELCO believes its rate structure and pricing for Power Factor variation from 85% is cost-based, or not.
i. Provide complete copies of all documents associated with or supportive of the responses to parts (g) and (h) of this information request.

HELCO Response:

a. The rate designs for demand charges and energy charges in Schedule J and Schedule P presume that customers maintain 85% power factor. A further adjustment applies to the demand charges and energy charges in the form of the power factor adjustment when customer power factor is above or below 85%.

b. There is no cost of service analysis or other study that supports the statement quoted in part (a) above. The power factor adjustment based on 85% power factor has been included in the Schedule P rate of HELCO's predecessor since at least 1940 (see page 4 of this response), and was subsequently adopted into HELCO's Schedule J when Schedule J

became a separate rate schedule.

c. Not applicable.

d. This power factor adjustment was in the original HELCO Schedule J tariff, effective March 15, 1991, that was approved by the PUC in Decision and Order No. 10993 in Docket No. 6432.

e. The power factor adjustment for HELCO's Schedule J is the same as the power factor adjustment for HECO's Schedule J. We are not aware of any cost of service analyses or other studies that were prepared to support the power factor adjustment.

f. Not applicable.

g. On the HELCO system, the larger loads are typically inductive motors and it is much more common for customers to consume vars than produce vars. Loads that draw a lot of vars can create lower voltages, which require the utility to support the vars and possibly install capacitors or other means to supply vars to the system or support the system from production on the generators. The higher current flow on the transmission lines increases line losses and also results in the transmission system approaching its capacity sooner. The costs of providing var flows include excessive system losses, which require HELCO to produce more power at the generators to serve the same amount of customer load, the cost of installing equipment, such as capacitors, to manage voltage, and the reduction of system capacity, which eventually requires lines to be reconductored sooner than otherwise. Quantification of the costs that are associated with reactive power would require a complicated system analysis, which is not practical at this time. The cost of distribution system and transmission system capacitors is included in the estimate of test year rate base. The cost of the var support provided through generation is included in the test year estimate

of fuel expense.

h. HELCO believes that its rate structure and pricing for Power Factor variation from 85% is cost-based. The sum of the proposed charges, customer charges, demand charges, energy charges, power factor adjustments, supply voltage adjustments, rider adjustments, and other adjustments equals the revenue requirement or HELCO's total test year costs. While it may be correct that the power factor adjustment does not precisely match the costs of providing reactive power, it is also true that the customer charges do not equal customer costs, demand charges do not equal demand costs, and energy charges do not equal energy costs. But the estimated total revenue provided by the sum of the revenue charge and revenue adjustment elements equals the revenue requirement or total cost, and therefore HELCO's rate structure and pricing for power factor is cost-based.

i. Not applicable.

Superseding Revised Sheet No. 11
Effective March 1, 1932

REVISED SHEET No. 11
Effective September 1, 1940

SCHEDULE "P" (Continued)

Power Factor Correction:

The above rates are based upon an average power factor of 85%. If the power factor is found to average below 85%, 1% shall be added to the demand charge for each 1% of average power factor below 85%. If the power factor is found to average above 85%, 1% shall be deducted from the demand charge for each 1% of average power factor above 85%. In no case, however, shall the maximum increase or decrease exceed 15%. No adjustment will be made for power factor where the installed capacity is less than 25 H.P.

The demand charge will be based on a rate of $0.50 per connected horse-power per meter per month.

Extension of Service:

All applicants for service under this tariff requiring an extension for service in excess of one span (approximately 150 feet) will be required to pay an amount to be agreed upon between the customer and the Company, but not to exceed actual cost of extension. Subject to the Rules and Regulations as filed.

Special Service:

Applicants for special, or underground service under this tariff will be required to pay for such service, not to exceed the actual cost of same.

CA-IR-244

Ref: HELCO T-1, page 11, & Response to CA-IR-13 (Keahole Land Rezoning).

In response to CA-IR-13, parts (a) and (b), the Company describes certain activities in 2005 and 2006 associated with the reclassification (amend land use from "conservation" to "urban"), rezoning (from "open" to "general industrial") and issuance of a Covered Source Permit amendment by DOH to include Selective Catalytic Reduction with the installation of ST-7 at the Keahole station site. Please provide the following clarification:

a. Why was it necessary to amend the land use district boundary to reclassify the Keahole station site from "conservation" to "urban?" Please explain.

   1. Was the reclassification referenced in part (a) of this information request unique to the planned installation of ST-7 at Keahole? Please explain.

   2. If the reclassification was not unique to the planned installation of ST-7 at Keahole, how was HELCO able to complete and operate Keahole CT-4/CT-5 prior to the amendment being granted by the State of Hawaii Land Use Commission? Please explain.

b. Why was it necessary to rezone the Keahole station from "open" to "general industrial?" Please explain.

   1. Was the rezoning referenced in part (b) of this information request unique to the planned installation of ST-7 at Keahole? Please explain.

   2. If the rezoning was not unique to the planned installation of ST-7 at Keahole, how was HELCO able to complete and operate Keahole CT-4/CT-5 prior to the rezoning being completed? Please explain.

c. Please confirm that the issuance of a Covered Source Permit amendment by DOH to include Selective Catalytic Reduction with the installation of ST-7 at the Keahole station site was unique to the planned installation of ST-7 at Keahole. If this cannot be confirmed, please explain why in detail.

HELCO Response:

a. HELCO was required by the Board of Land and Natural Resources (BLNR) Order dated March 25, 2002 (allowing HELCO until December 31, 2003 to complete construction of the Keahole plant expansion), the BLNR Order of October 10, 2003 (allowing HELCO a further construction deadline extension until July 31, 2005) and the Settlement Agreement of

November 2003 between HELCO, the Keahole Defense Coalition, the State Department of Hawaiian Home Lands, Peggy Ratliff, Mahi Cooper, the State Department of Health, the State Department of Land and Natural Resources (DLNR) and BLNR (terminating long-standing litigation related to the plant expansion) to file a petition with the State Land Use Commission to amend the classification of the Keahole property from Conservation district to Urban district. The Settlement Agreement also specifically required HELCO to change the County of Hawaii General Plan designation and county zoning district for the Keahole Station from its Open designation and district to the General Industrial designation and district which is more appropriate for industrial activity. Although not specified in the BLNR Orders, county rezoning is a necessary step following State land use reclassification.

Although the industrial use of the subject property was permitted under the Conservation classification, the urban classification is more in line with recently enacted land classifications for power plant use. Additionally, the Conservation District classification limited HELCO's ability to make any improvements at the Keahole Station including changes to existing facilities, any improvements to reflect technological advances or future regulatory requirements, and the installation of ST-7. (See response to subpart a.1 of this IR response for more details on the ST-7 impact.) Reclassification and the change in zoning made the use of the Keahole property more consistent with its industrial use.

1. No, in one sense the reclassification request was not unique to the planned installation of ST-7 in that the BLNR Orders and the Settlement Agreement would have required the application for reclassification even if plans for ST-7 had not proceeded. However, in another sense the reclassification had a unique impact on ST-7 in that the installation of ST-7 in the conservation district would have been adversely affected by: (a) the need

to complete installation by the BLNR construction deadline, which was not projected to be possible; (b) the inability to get another conservation district use amendment (CDUA) for ST-7 only, based on 1994 legislation denoted as Act 270, which prospectively prohibited fossil-fueled generation in the conservation district; and (c) the requirement in the Settlement Agreement to install selective catalytic reduction (SCR) along with ST-7, as SCR was not part of the plans that had been approved by DLNR in relation to the default entitlement that HELCO had obtained in lieu of the CDUA it had applied for in 1992.

2. Obtaining the reclassification was not a condition to operating CT-4/CT-5, even in the conservation district. The March 25, 2002 BLNR Order required HELCO to "file an application for boundary amendment" and the October 10, 2003 BLNR Order required that the application be timely re-filed. Likewise, the Settlement Agreement required HELCO to "petition the Land Use Commission. . ." As stated in subpart a above, the industrial use of the property, including CT-4/CT-5, was permitted in the conservation district. After numerous lawsuits and administrative proceedings, HELCO was able to complete construction of CT-4 and CT-5 only after the Third Circuit Court vacated its judgment overturning the March 25, 2002 BLNR Order, which in turn was dependent on having executed a Settlement Agreement with interested parties, including regulators and opponents to the project. Pages 67 and 68 of HELCO-1501 provide a summary of the Settlement Agreement. Pages 55 through 59 of HELCO-1501 provide more background on the land use approval process for CT-4 and CT-5.

b. See response to subpart a of this IR response.

1. See response to subpart a.1 of this IR response.

2. See response to subpart a.2 of this IR response.

c. The amendment of the Covered Source Permit for CT-4, CT-5, and ST-7 to include the use of SCR was completed to fulfill HELCO's obligation under the Settlement Agreement to implement ST-7 with SCR.

CA-IR-245

Ref: HELCO T-1, page 11, & Response to CA-IR-13 (Keahole Land Rezoning).

In response to parts (a) and (b) of CA-IR-13, the Company describes certain activities in 2005 and 2006 associated with the reclassification (amend land use from "conservation" to "urban"), rezoning (from "open" to "general industrial") and issuance of a Covered Source Permit amendment by DOH to include Selective Catalytic Reduction ("SCR") with the installation of ST-7 at the Keahole station site. In response to CA-IR-13(b), HELCO indicates that $1,956,171 (Project No. H0000655) was incurred for the reclassification and rezoning of the Keahole station that HELCO T-14 has included in 2006 test year plant additions. Please provide a breakdown of the $1,956,171 project cost between each of the following elements:

a. reclassification efforts;

b. rezoning efforts; and

c. ST-7 SCR amendment efforts.

d. If the information requested in parts (a) through (c) above cannot be provided, please explain why in detail.

HELCO Response:

a. Reclassification and rezoning costs total $1,956,171. Reclassification and rezoning costs amounted to $1,800,865 and $155,306, respectively.

b. See response to subpart a.

c. The costs to amend the Covered Source Air Permit for ST-7's SCR were not included in the $1,956,171 amount. The outside consultant costs of $20,749 for this effort are included in the ST-7 project (H0001383) costs.

d. Not applicable.

CA-IR-246

Ref: HELCO-205.

Please provide complete copies, for each available month of 2006 to-date, of each type of recurring internal business report that is prepared by or for HELCO management personnel in the normal course of business to track, monitor and explain KWH sales volumes, trends and variances from budgeted levels of sales.

HELCO Response:

HELCO produces monthly reports used to monitor the KWH sales of the top 25 individual accounts for the month and year-to-date (YTD), a summary of YTD and monthly sales performance and related economic information, and summary of the KWH sales of the top 25 individual accounts with notes on significant changes. Available reports for 2006 have been attached. See pages 2 to 22 of this response.

The requested information includes confidential information and will be provided pursuant to Protective Order No. 22593, dated June 30, 2006.

CA-IR-247

Ref: HELCO-208.

Please provide complete copies, for each available month of 2006 to-date, of each type of recurring internal business report that is prepared by or for HELCO management personnel in the normal course of business to track, monitor and explain customer additions, customer service terminations and migrations among rates schedules, as well as variances from budgeted levels of customers.

HELCO Response:

There are no recurring internal business reports as requested.

CA-IR-248
Ref: Response to CA-IR-22, Updated Sales Forecast.

a. Please explain whether HELCO believes that its updated sales forecast should be utilized in this Docket in place of some, or all of the earlier forecasted sales information reflected within its prefiled evidence.

b. Provide calculations indicative of the revenue impact of each change that is believed to be appropriate (if any) for inclusion in the revenue requirement.

HELCO Response:

a. HELCO believes that the sales forecast provided in its written testimony HELCO T-2 should be utilized in this Docket, until actual 2006 sales data are available.

b. See answer to part a.

CA-IR-249

Ref: HELCO-WP-302, pages 44-89 and 126-128, Rider M Adjustments.

For each of the following Rider M customers, please explain how the curtailable demand was determined and monitored or measured by HELCO and provide copies of the customers' actual October 2004 through September 2005 monthly billing determinants by rate element, as well as any adjustment calculations used to establish the billing determinants used for the test period:

a. JM (B) 2.
b. JM (B) 5.
c. JM (B) 7.
d. JM (B) 27.
e. PM (B) 20.
f. PM (B) 21.

HELCO Response:

The curtailable kW is determined each month as the difference between the outside priority peak kW and priority peak kW, with a maximum curtailable kW specified in the customer contract. Fifteen minute interval data meters are used to measure priority peak and outside peak kW for each month. The priority peak is defined as Monday – Friday, 5pm – 9pm. For the Schedule J, Rider M(B) accounts, the regular Schedule J kWb at proposed rates was changed from Max(kWm $_{curr\ mo}$, 75% max kWm $_{prev\ 11\ mos.}$, 25 kW) to Max(kWm curr mo, 50% x (kWm $_{curr\ mo}$ + max kWm $_{prev\ 11\ mos.}$), 25 kW), consistent with HELCO's proposal to modify Schedule J's determination of billing demand.

a. JM (B) 2: The contract maximum curtailed demand is equal to 240.0 kW. The first Rider bill for this account occurred on 7/22/05. The curtailable demand of 226.0 was based on the average of three months of data from 7/05 – 9/05. Please see page 3 of this response.

b. JM (B) 5: The contract maximum curtailed demand is equal to 121.8 kW. The first Rider bill for this account occurred on 10/28/05. The curtailable demand of 116.0 was based on the average of three months of data from 10/05 – 12/05. Please see page 4 of this response.

c. JM (B) 7: The contract maximum curtailed demand is equal to 499.8 kW. The first Rider bill for this account occurred on 12/22/05. One month of data was used to determine the curtailed kW of 472.0. Please see page 5 of this response.

d. JM (B) 27: The contract maximum curtailed demand is equal to 382.5 kW. The curtailable demand of 321.9 was based on the average from 10/04 – 9/05. Please see page 6 of this response.

e. PM (B) 20: The contract maximum curtailed demand is equal to 600.0 kW. The curtailable demand of 401.5 was based on the average from 10/04 – 9/05. Please see page 7 of this response.

f. PM (B) 21: The contract maximum curtailed demand is equal to 373.0 kW. The curtailable demand of 210.3 was based on the average from 10/04 – 9/05. Please see page 8 of this response.

HELCO Rider Billing data

Account	Rate								
JM (B) 2	J			Present Reg	Proposed Reg	Present Rider	Proposed Rider		
Mo	kWm	Priority kW	Curtailed kW	kWb	kWb	kWb	kWb	kWh	PF
7/22/2005	226	0	226	226	226	56.5	56.5	7200	87
8/23/2005	226	0	226	226	226	56.5	56.5	5800	89
9/22/2005	226	0	226	226	226	56.5	56.5	10600	87
Average	226	0	226	226	226	56.5	56.5	7867	88

First Rider bill: 7/22/05; Contract Max curtailed kW = 240.

HELCO Rider Billing data

Account JM (B) 5	Rate J			Present Reg	Proposed Reg	Present Rider	Propsoed Rider		
Mo	kWm	Priority kW	Curtailed kW	kWb	kWb	kWb	kWb	kWh	PF
10/28/2005	116	0	116	116	116	29	29	16200	85
11/29/2005	116	0	116	116	116	29	29	16000	85
12/29/2005	116	0	116	116	116	29	29	17400	85
Average	116	0	116	116	116	29	29	16533	85

First Rider bill 10/05; Applied data from 10/05 - 12/05; Contract Max Curtailed kW = 121.8

HELCO Rider Billing data

Account JM (B) 7	Rate J								
Mo	kWm	Priority kW	Curtailed kW	Present Reg kWb	Proposed Reg kWb	Present Rider kWb	Proposed Reg kWb	kWh	PF
12/22/2005	472	0	472	476	476	122	122	155400	79
Average	472	0	472	476	476	122	122	155400	79

First Rider bill 12/05; Applied data from 12/05; Contract Max Curtailed kW = 499.8.

HELCO Rider Billing data

Account JM (B) 27	Rate J3			Present Reg	Proposed Reg	Present Rider	Proposed Rider		
Mo	kWm	Priority kW	Curtailed kW	kWb	kWb	kWb	kWb	kWh	PF
10/20/2004	330	0	330	330	354	82.5	106.5	3,000	32
11/18/2004	330	0	330	330	354	82.5	106.5	4,200	47
12/17/2004	372	0	372	372	375	93	96	3,000	38
1/18/2005	378	0	378	378	378	94.5	94.5	24,000	75
2/16/2005	162	0	162	378	378	256.5	256.5	2,400	37
3/18/2005	378	0	378	378	378	94.5	94.5	45,000	81
4/19/2005	366	324	42	366	372	334.5	340.5	10,200	63
5/18/2005	384	0	382.5	384	384	97.1	97.1	71,400	83
6/17/2005	372	0	372	372	378	93	99	10,200	67
7/19/2005	372	0	372	372	378	93	99	79,800	83
8/17/2005	372	0	372	372	378	93	99	51,000	82
9/19/2005	372	0	372	372	378	93	99	84,000	84
Average	349	27	321.9	367	373.8			32350	64
Calculated Average Rider kWb						125.6	132.4		

Contract Max curtailed kW = 382.5

HELCO Rider Billing data

Account	Rate
PM (B) 20	P

Mo	kWm	Priority kW	Curtailed kW	Reg kWb	Rider kWb	kWh	PF
10/8/2004	540	16	524	552	200	275200	89
11/8/2004	540	6	534	551	200	296800	88
12/8/2004	542	6	536	551	200	302600	90
1/8/2005	538	538	0	540	540	343800	90
2/7/2005	540	536	4	541	538	296200	89
3/9/2005	540	536	4	541	538	304800	90
4/8/2005	550	6	544	550	200	305000	90
5/9/2005	540	6	534	545	200	309600	90
6/8/2005	538	6	532	544	200	291200	89
7/8/2005	544	6	538	547	200	265800	87
8/8/2005	540	6	534	545	200	295600	89
9/8/2005	540	6	534	545	200	294600	89
Average	541	139.5	401.5	546		298433	89
Calculated Average Rider kWb					244.9		

Contract Max Curtailed kW = 600.

HELCO Rider Billing data

Account	Rate
PM (B) 21	P

Mo	kWm	Priority kW	Curtailed kW	Reg kWb	Rider kWb	kWh	PF
10/15/2004	360	0	360	360	200	258,600	89
11/15/2004	360	0	360.0	360	200	268,800	89
12/14/2004	360	360	0.0	360	360	247,800	89
1/13/2005	360	360	0.0	360	360	257,400	89
2/11/2005	360	360	0.0	360	360	251,100	89
3/15/2005	363	363	0.0	363	363	277,800	89
4/14/2005	363	363	0.0	363	363	245,100	89
5/13/2005	360	0	360.0	361.5	200	217,500	89
6/14/2005	360	0	360.0	361.5	200	242,400	89
7/14/2005	363	0	363.0	363	200	224,700	89
8/12/2005	360	0	360.0	361.5	200	214,500	89
9/14/2005	360	0	360.0	361.5	200	239,100	89
Average	360.8	150.5	210.3	361.3		245,400	89
Calculated Average Rider kWb					203.6		

Contract Max Curtailed kW = 373.

CA-IR-250

Ref: HELCO-WP-302, pages 90-107 and 129, Rider T Adjustments.

For each of the following Rider T customers, please provide a copy of the customers' actual October 2004 through September 2005 monthly billing determinants by rate element, as well as any adjustment calculations used to establish the billing determinants used for the test period:

a. JT 2
b. JT 9
c. P (T) 22.

HELCO Response:

For the two Schedule J, Rider T accounts, the calculation of the regular Schedule J kWb and On-Peak kWb at proposed rates was changed from Max(kWm $_{curr\ mo}$, 75% max kWm $_{prev\ 11\ mos.}$, 25 kW) to Max(kWm curr mo, 50% x (kWm $_{curr\ mo}$ + max kWm $_{prev\ 11\ mos.}$), 25 kW), consistent with HELCO's proposal to modify the Schedule J determination of billing demand.

a. Please see the attached page 2 for the monthly billing determinants. An average of two months of billing data from 11/05 – 12/05 was used to determine the billing determinants for JT (2) since the first Rider bill occurred in 11/05.

b. Please see the attached page 3 for the monthly billing determinants. The billing determinants for JT (9) were based on an average of twelve months of data from 10/04 – 9/05.

c. Please see the attached page 4 for the monthly billing determinants. The billing determinants for P (T) (22) were based on an average of twelve months of data from 10/04 – 9/05.

HELCO Rider Billing Data

J(T) 2

Mo	On-Peak kWh	Off-Peak kWh	Total kWh	Reg kW	On-Peak kW	Present On-peak kWb	Proposed On-Peak kWb	Present Reg kWb	Propsoed Reg kWb	PF
11/7/2005	3600	116800	120400	472	470	470.0	470.0	472.0	472.0	87
12/7/2005	1000	98600	99600	468	353	352.5	411.3	468.0	470.0	87
average	2300	107700	110000	470	411.3	411.3	440.7	470.0	471.0	87
kWh %	2.1%	97.9%								

First Rider bill on 11/7/05; applied data from 11/05 - 12/05.

CA-IR-250
DOCKET NO. 05-0315
PAGE 2 OF 4

CA IR 241 xls J(T) 2 pres
Pricing cm
5/1/2006

HELCO Rider Billing Data

J(T) 9

Mo	On-Peak kWh	Off-Peak kWh	Total kWh	Reg kW	On kW	Present On-peak kWb	Proposed On-peak kWb	Present Reg kWb	Proposed Reg kWb	PF
10/12/2004	56200	105200	161400	566	538	538	538	566	567	89
11/9/2004	35800	52800	88600	544	492	492	515	544	556	85
12/9/2004	35800	67200	103000	470	404	404	471	470	519	91
1/10/2005	37600	60600	98200	354	296	404	417	354	461	91
2/8/2005	26200	33600	59800	484	484	484	511	484	526	92
3/10/2005	54200	65000	119200	578	578	578	578	578	578	90
4/11/2005	46600	60200	106800	578	574	574	576	578	578	91
5/10/2005	44200	70600	114800	576	562	562	570	576	577	91
6/9/2005	52200	79800	132000	500	498	498	538	500	539	90
7/11/2005	53400	92600	146000	574	564	564	571	574	576	90
8/9/2005	48800	95200	144000	576	576	576	577	576	577	90
9/9/2005	49200	94400	143600	572	552	552	565	572	575	90
average	45017	73100	118117	531	510	518.8	535.6	531	552.4	90
kWh %	38.1%	61.9%								

CA-IR-250
DOCKET NO. 05-0315
PAGE 3 OF 4

HELCO Rider Billing Data

P(T) 22

Mo	On-Peak kWh	Off-Peak kWh	Total kWh	On-peak kWb	Reg kWb	PF
10/7/2004	7760	97241	105000	516	600	80
11/6/2004	10200	63600	73800	498	585	78
12/7/2004	13200	33600	46800	492	576	72
01/07/05	10200	37800	48000	288	403	73
0204/05	13200	11400	24600	483	534	81
3/8/2005	8400	20400	28800	468	492	87
4/7/2005	6600	82200	88800	465	531	80
5/6/2005	24000	93600	117600	480	561	82
6/7/2005	7200	61200	68400	297	564	83
7/7/2005	40200	56400	96600	474	552	84
8/5/2005	7200	42000	49200	441	549	84
9/7/2005	6600	12600	19200	288	385	95
average	12897	51003	63900	432.5	527.7	82
kWh %	20.2%	79.8%				

CA-IR-251

Ref: HELCO-WP-302, pages 108, 109 and 130, Rider A Adjustments.

For each of the following Rider A customers, please:

a. explain how the Contract Standby demand was determined, provide a copy of the Standby Service Contract, and

b. provide a copy of the customers' actual October 2004 through September 2005 monthly billing determinants by rate element, as well as any adjustment calculations used to establish the billing determinants used for the test period.
   1. JA 1.
   2. P (A) 23.

HELCO Response:

a. The Contract Standby kW for each of these two customers is based on the respective nameplate ratings of the generating units; see Terms and Conditions #5 at HELCO-105, pages 39-40. The Rider A standby service contract for these customers are attached as pages 2 and 3 of this response.

b. The monthly billing determinants are attached as pages 4 and 5 of this response. The Schedule J, Rider A account calculation of the total Load ratcheted kWb and HELCO meter regular Schedule J kWb at proposed rates was changed from Max ($kWm_{curr\ mo}$, 75% max $kWm_{prev\ 11\ mos.}$, 25 kW) to Max (kWm curr mo, 50% x ($kWm_{curr\ mo}$ + max $kWm_{prev\ 11\ mos.}$), 25 kW), to be consistent with HELCO's proposal to modify the Schedule J determination of billing demand.

The requested information is confidential and will be provided pursuant to Protective Order No. 22593, dated June 30, 2006.

The requested information is confidential and will be provided pursuant to Protective Order No. 22593, dated June 30, 2006.

The requested information is confidential and will be provided pursuant to Protective Order No. 22593, dated June 30, 2006.

The requested information is confidential and will be provided pursuant to Protective Order No. 22593, dated June 30, 2006.

CA-IR-252

Ref: HELCO-WP-302, pages 110 and 111, Schedule U Adjustments.

For the Schedule U customer represented in these workpapers, please provide actual October 2004 through September 2005 monthly billing determinants by rate element, as well as any adjustment calculations used to establish the billing determinants used for the test period.

HELCO Response:

Please see the attached for the actual monthly billing determinants from 10/04 – 9/05.

HELCO Schedule U

J U1

Month	On-Peak kWh	Off-Peak kWh	Total kWh	Reg kWb	On kWm	On kWb	PF
10/06/04	600	81,200	81,800	308.0	0	25	91
11/05/04	200	79,000	79,200	310.0	0	25	91
12/06/04	200	80,600	80,800	310.0	0	25	91
01/06/05	200	79,600	79,800	306.0	0	25	91
02/03/05	200	61,800	62,000	308.0	0	25	91
03/07/05	200	84,600	84,800	308.0	0	25	91
04/06/05	400	80,800	81,200	308.0	0	25	91
05/05/05	200	83,200	83,400	306.0	0	25	91
06/06/05	400	91,600	92,000	306.0	0	25	91
07/06/05	200	79,400	79,600	310.0	0	25	91
08/04/05	0	83,800	83,800	312.0	0	25	93
09/06/05	200	95,200	95,400	310.0	0	25	90
Average	250	81,733	81,983	309.0	0	25	91

CA-IR-253

Ref: HELCO Response to CA-IR-66, pages 3 and 5; Reliability Statistics.

The two attachments state, "Attached for your reference, please find a summary of reliability statistics for each of HELCO generating units for 2004 through June 6." Please provide the following information:

a. Complete copies of the referenced attachments that were not provided with the response to CA-IR-66.

b. Comparable reliability statistical information for all available periods subsequent to June 6, 2004.

c. Explain the Company's progress, as well as any continuing problems in achieving the goals stated in the "CT&D Maintenance Priorities" document, with reference to the information contained in response to part (b) of this information request.

d. Explain the Company's progress, as well as any continuing problems in achieving the goals stated in the "S&HU Maintenance Priorities" document, with reference to the information contained in response to part (b) of this information request.

HELCO Response:

a. See CA-IR-253 Attachment 1.

b. See CA-IR-253 Attachment 2 for the remaining statistics for 2004. See also CA-IR-253 Attachment 3 for 2005 statistics and CA-IR-253 Attachment 4 for 2006 year-to-date statistics.

c. Diesel units are generally used as fast start units to quickly recover for lost generation and need to start when commanded. In general, the number of failed starts has improved since 2004. However, certain units do continue to experience failed starts such as D23. Diesel unit trips, with the exception of the dispersed diesels in 2006, have improved significantly.

For the Combustion Turbines, the overall number of failed starts is reduced with the exception of CT-2 in 2006. CT-2 will undergo a control upgrade in late 2006 and this

is expected to improve. CT-3, CT-4 and CT-5 have also improved with their lesser number of failed starts. CT trips have also been on a downward trend generally. After their new control systems were installed, several of the CT-3, CT-4, and CT-5 2006 trips were attributable to commissioning and debugging of the new control systems installed on the units in late 2005. The control system upgrades were performed by Wood Group Turbine Control Services of Loveland, Colorado. The resolution of these trip events continued into 2006. The dynamic conditions present on the HELCO grid also contributed to these unit trips, which were generally overtemperature events caused by a sudden system frequency drop such as that caused by another unit tripping off line. Wood Group analyzed these trips in an ongoing effort to improve the units' control response and survivability with modified control algorithms that has allowed the units to operate under the demanding conditions that can exist on the HELCO grid.

d. Overall, the five HELCO steam plants have shown an overall upward trend in availability. With the exception of the Shipman steam plants there is a downward trend on forced outage rates. The Shipman steam units show a slightly upward trend in 2006 on forced outages, mainly attributed to boiler tube leaks on a small subset of tubes that are slated for replacement in the 2006 overhauls. This has also contributed to an increase in unit trips, coupled with Shipman unit control problems. The Shipman controls are slated for replacement in 2007. Hill 6 had several shutdowns in 2005 and in 2006 to repair numerous tube leaks in various locations in the furnace. A survey of the boiler tubes during the 2006 overhaul will determine which tubes to replace in the next overhaul. Although HELCO is below the stated 3% forced outage rate in the IOC on Hill

5, Hill 6 and Puna, the Shipman units are expected the improve, but to a lesser extent due to daily cycling and the ages of the units.

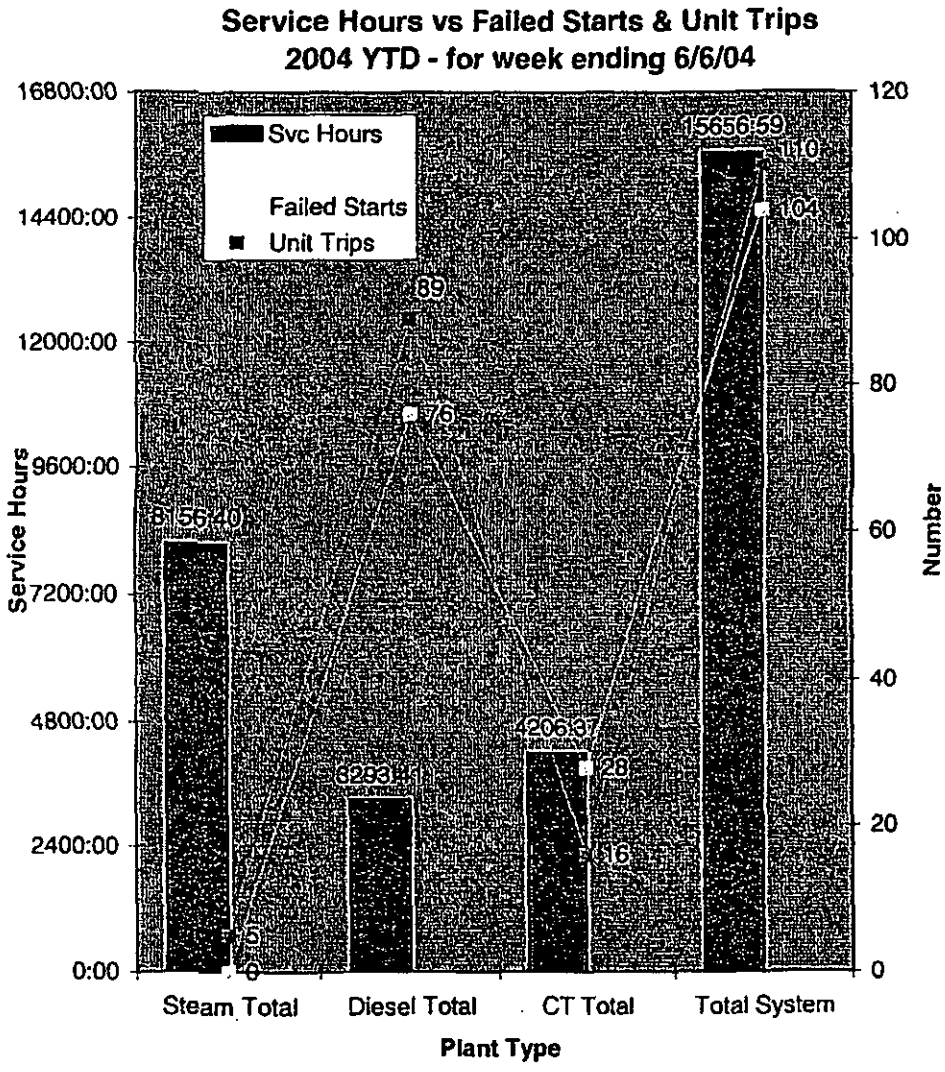
Service Hours vs Failed Starts & Unit Trips
2004 YTD - for week ending 6/6/04
Svc Hours
Failed Starts
Unit Trips
16800:00
14400:00
12000:00
9600:00
7200:00
4800:00
2400:00
0:00
Service Hours
120
100
80
60
40
20
0
Number
8 56:40
6293:14
4206:37
15656:59
5
6
89
76
28
16
110
104
Steam Total
Diesel Total
CT Total
Total System
Plant Type

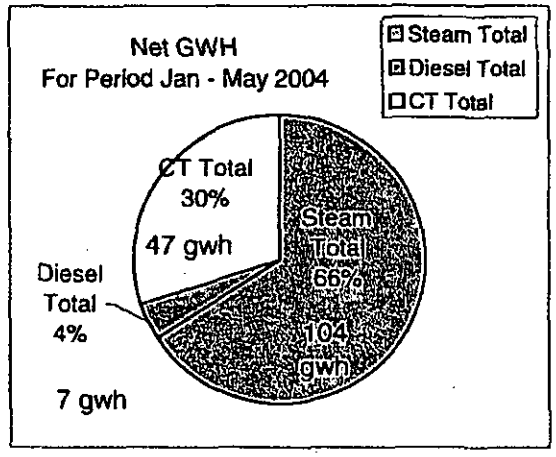
Net GWH
For Period Jan - May 2004
Steam Total
Diesel Total
CT Total
CT Total
30%
47 gwh
Steam
Total
66%
104
gwh
Diesel
Total
4%
7 gwh

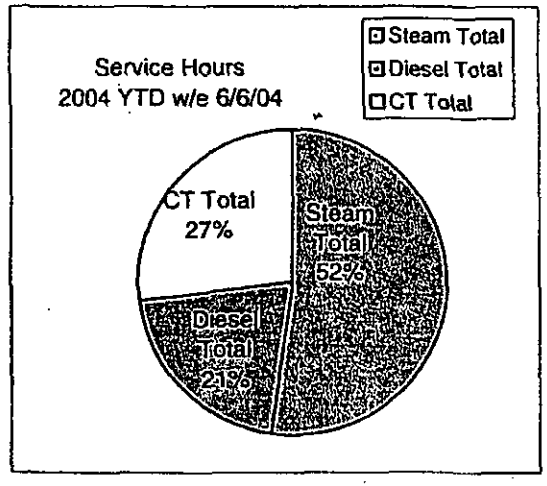
Service Hours
2004 YTD w/e 6/6/04
Steam Total
Diesel Total
CT Total
CT Total
27%
Steam
Total
52%
Diesel
Total
21%

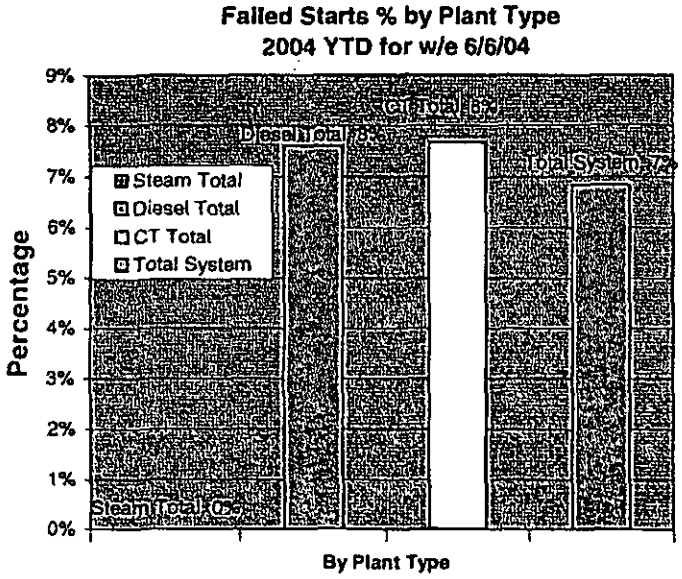
Failed Starts % by Plant Type
2004 YTD for w/e 6/6/04
Percentage
9%
8%
7%
6%
5%
4%
3%
2%
1%
0%
Steam Total
Diesel Total
CT Total
Total System
Steam Total 0%
Diesel Total 8%
CT Total 8%
Total System 7%
By Plant Type

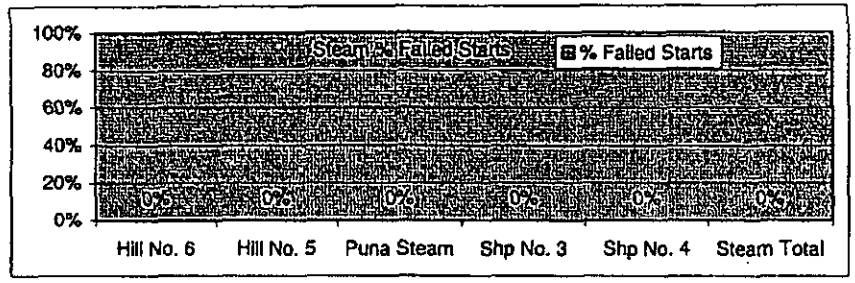
Steam % Failed Starts
% Failed Starts
100%
80%
60%
40%
20%
0%
0%
0%
0%
0%
0%
0%
Hill No. 6
Hill No. 5
Puna Steam
Shp No. 3
Shp No. 4
Steam Total

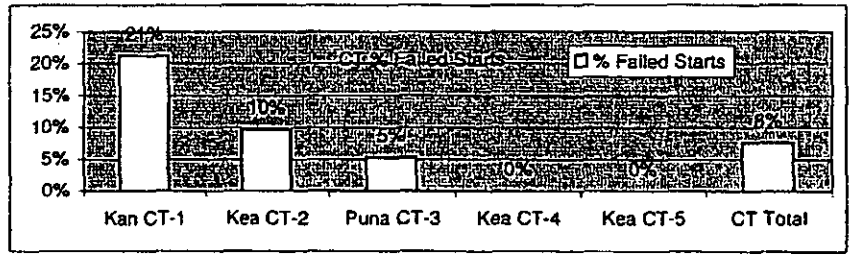
CT % Failed Starts
% Failed Starts
25%
20%
15%
10%
5%
0%
21%
10%
5%
0%
0%
8%
Kan CT-1
Kea CT-2
Puna CT-3
Kea CT-4
Kea CT-5
CT Total

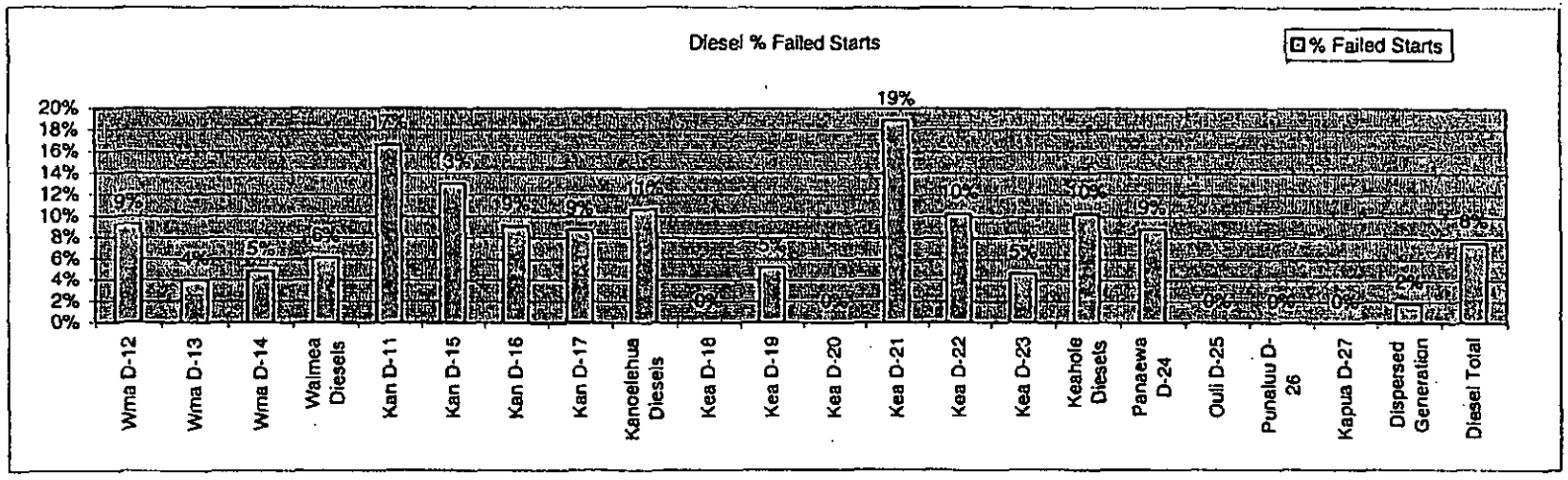
Diesel % Failed Starts
% Failed Starts
20%
18%
16%
14%
12%
10%
8%
6%
4%
2%
0%
9%
4%
5%
6%
17%
13%
9%
9%
11%
0%
5%
0%
19%
10%
5%
10%
9%
0%
0%
0%
2%
8%
Wma D-12
Wma D-13
Wma D-14
Waimea Diesels
Kan D-11
Kan D-15
Kan D-16
Kan D-17
Kanoelehua Diesels
Kea D-18
Kea D-19
Kea D-20
Kea D-21
Kea D-22
Kea D-23
Keahole Diesels
Panaewa D-24
Ouli D-25
Punaluu D-26
Kapua D-27
Dispersed Generation
Diesel Total

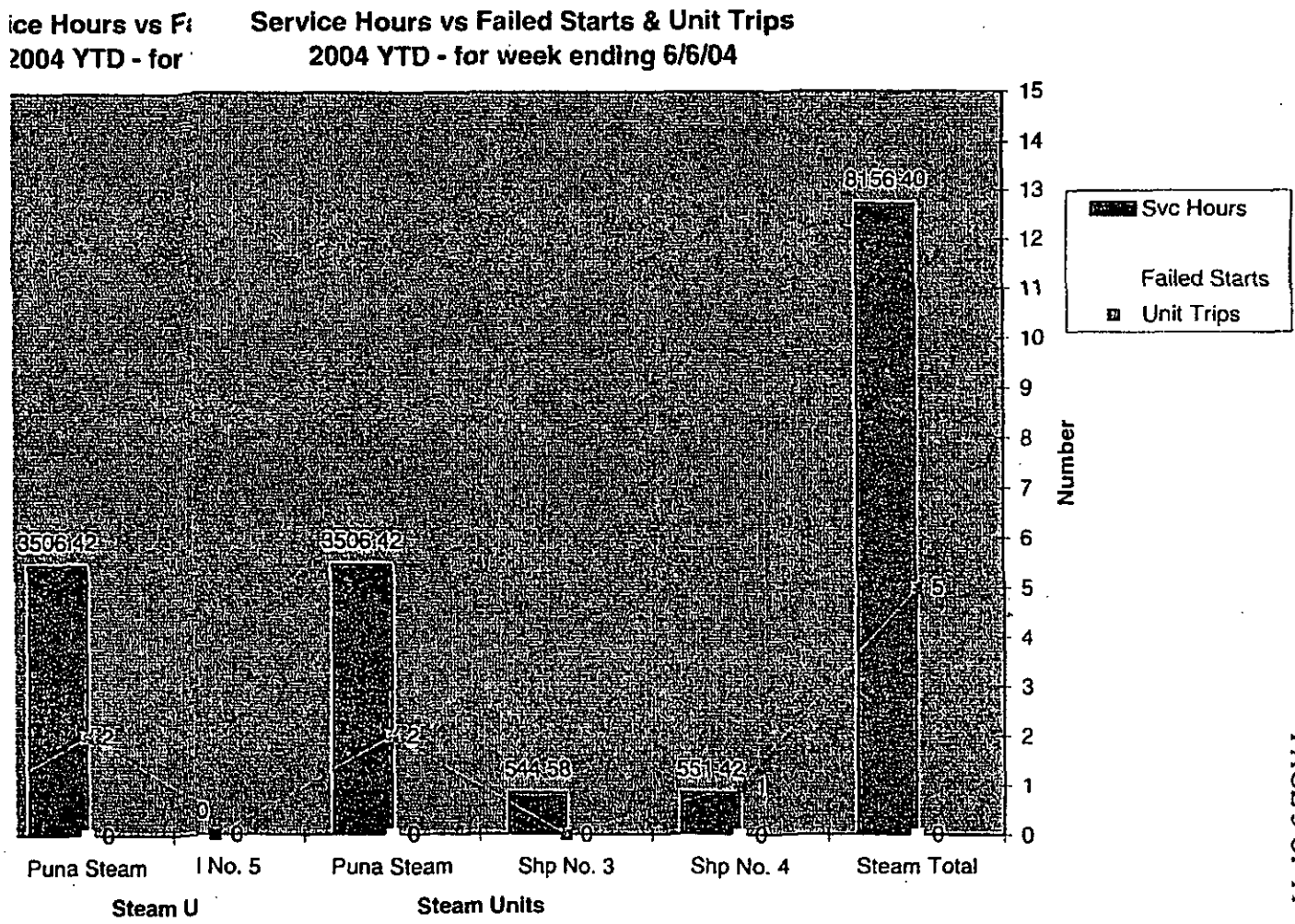
ice Hours vs Fa
2004 YTD - for
Service Hours vs Failed Starts & Unit Trips
2004 YTD - for week ending 6/6/04
Svc Hours
Failed Starts
Unit Trips
Number
3506.42
3506.42
544.58
551.42
8,156.40
Puna Steam
I No. 5
Puna Steam
Shp No. 3
Shp No. 4
Steam Total
Steam U
Steam Units

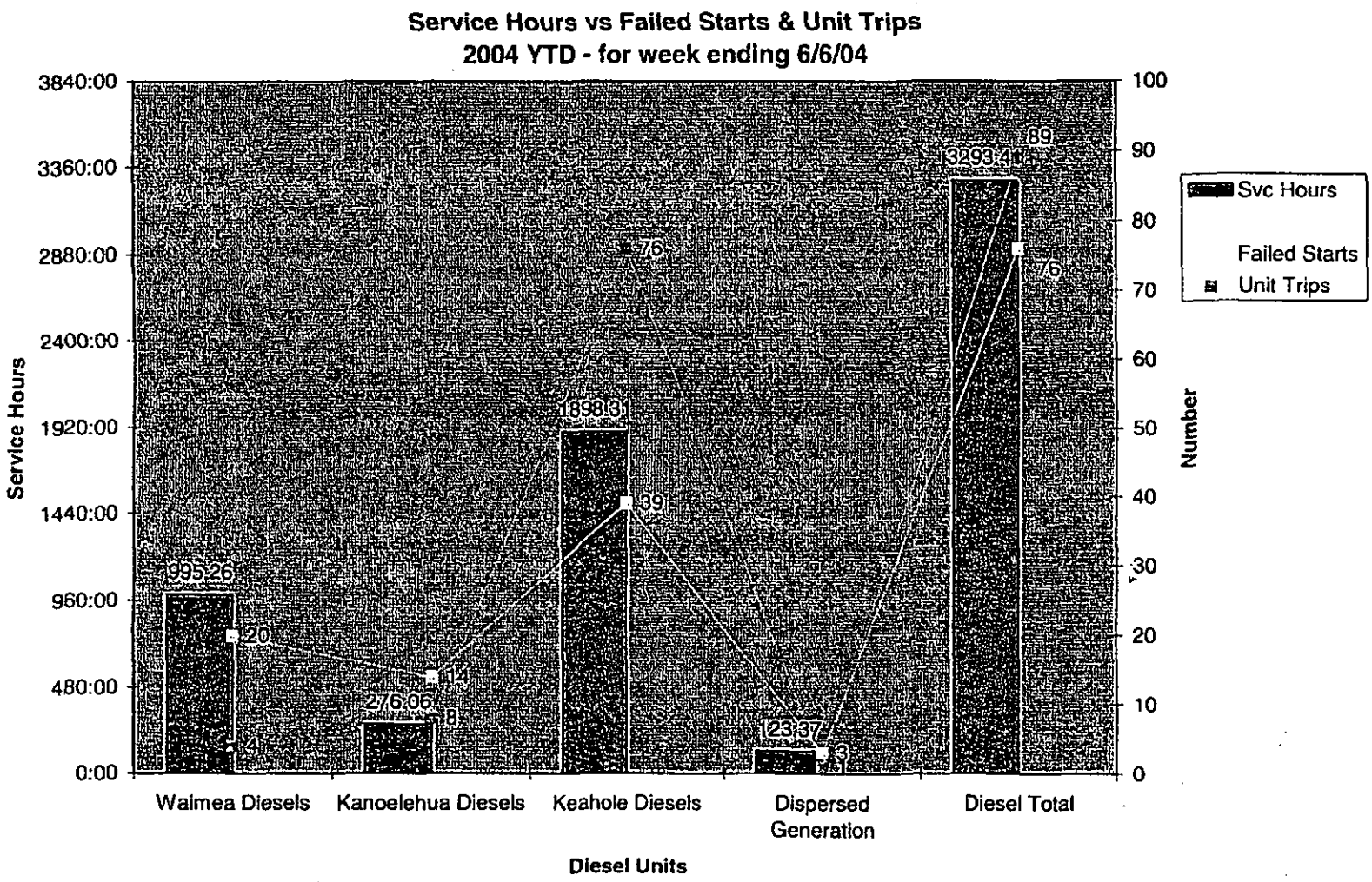
Service Hours vs Failed Starts & Unit Trips
2004 YTD - for week ending 6/6/04
Service Hours
3840:00
3360:00
2880:00
2400:00
1920:00
1440:00
960:00
480:00
0:00
Number
100
90
80
70
60
50
40
30
20
10
0
995:26
20
4
276:06
14
8
1898:31
76
39
123:37
3
3293:41
89
76
Svc Hours
Failed Starts
Unit Trips
Waimea Diesels
Kanoelehua Diesels
Keahole Diesels
Dispersed Generation
Diesel Total
Diesel Units

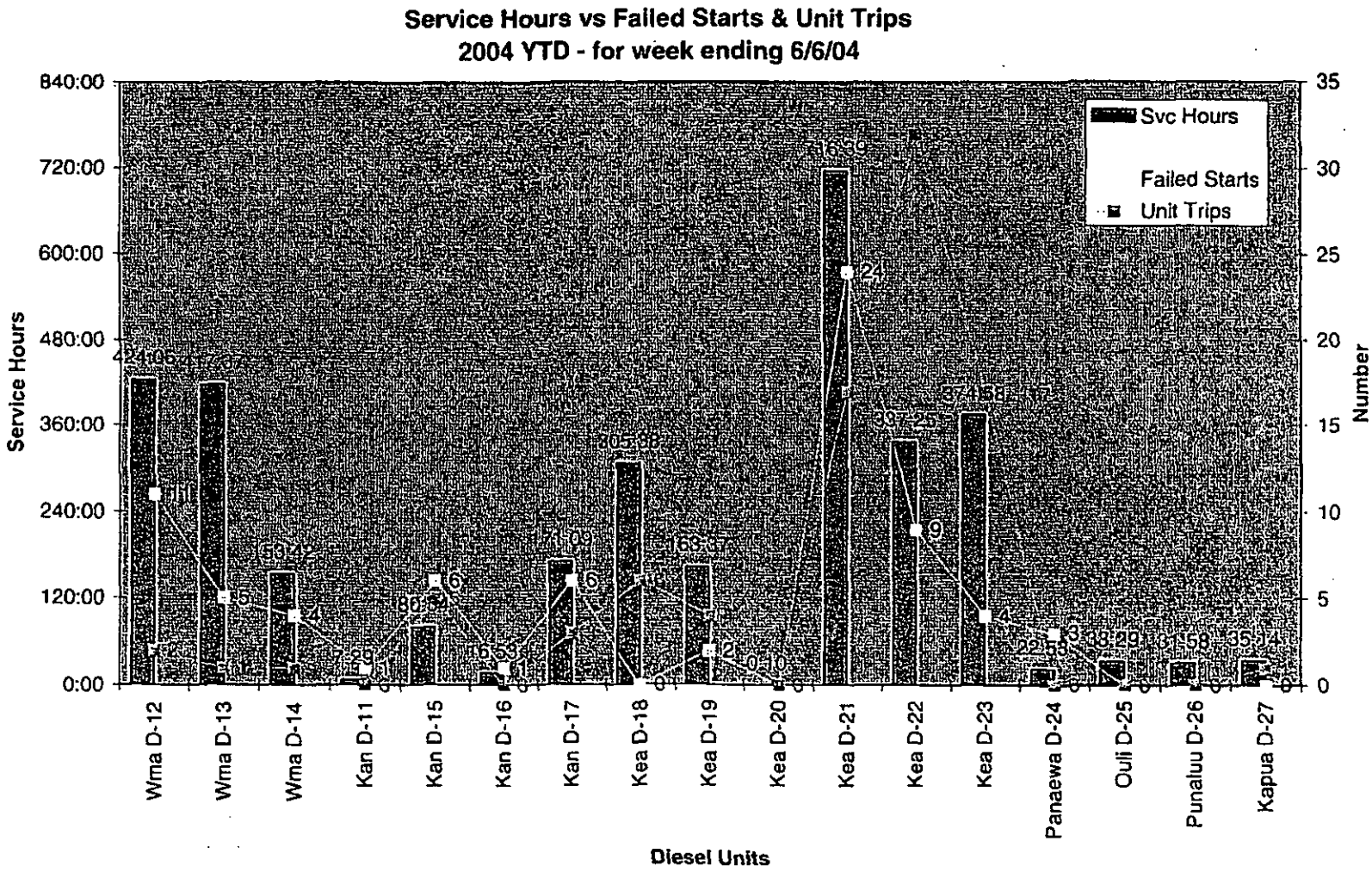
Service Hours vs Failed Starts & Unit Trips
2004 YTD - for week ending 6/6/04
Service Hours
Number
Svc Hours
Failed Starts
Unit Trips
840:00
720:00
600:00
480:00
360:00
240:00
120:00
0:00
35
30
25
20
15
10
5
0
Wma D-12
Wma D-13
Wma D-14
Kan D-11
Kan D-15
Kan D-16
Kan D-17
Kea D-18
Kea D-19
Kea D-20
Kea D-21
Kea D-22
Kea D-23
Panaewa D-24
Ouli D-25
Punaluu D-26
Kapua D-27
Diesel Units

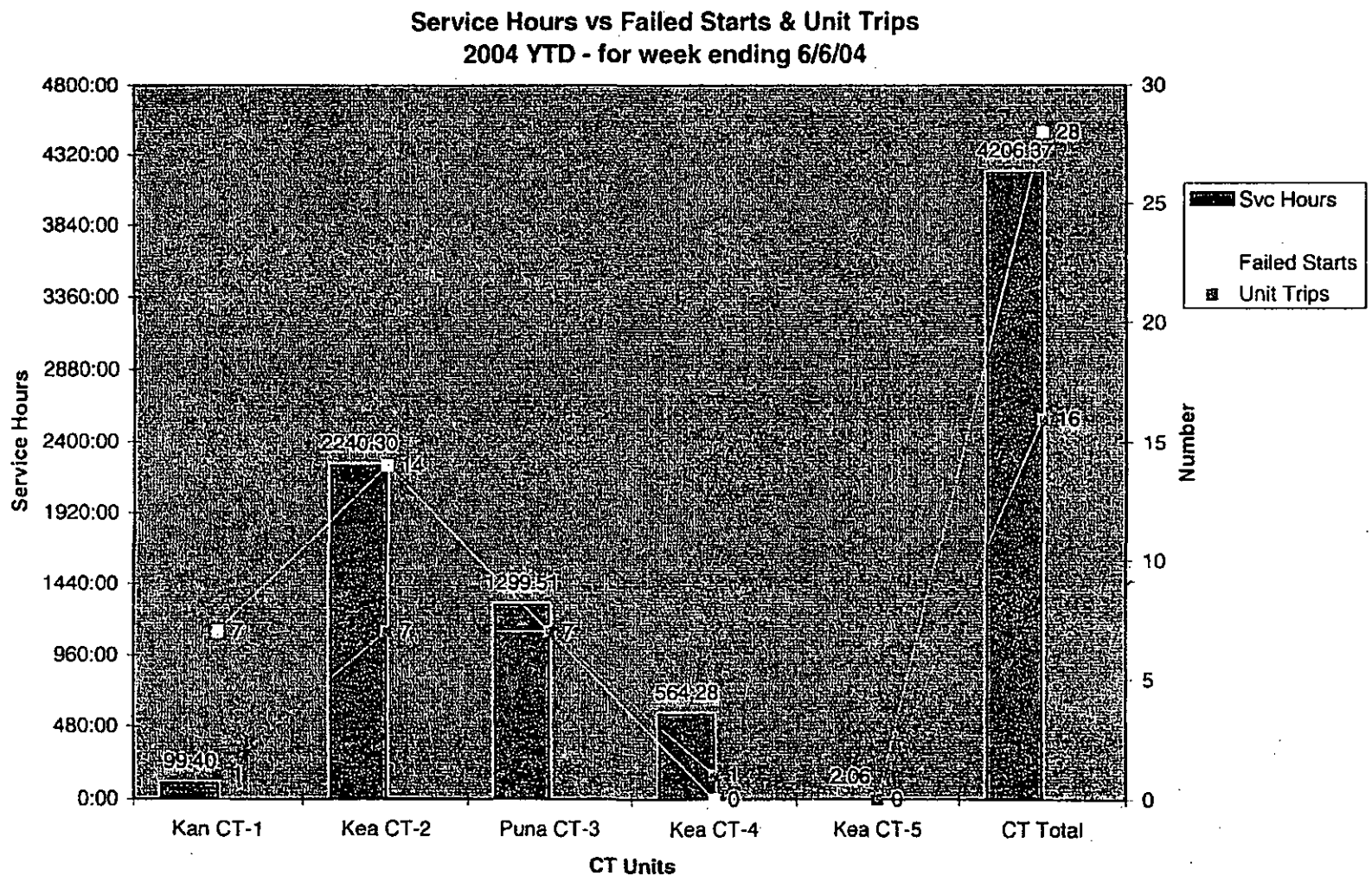
Service Hours vs Failed Starts & Unit Trips
2004 YTD - for week ending 6/6/04
Service Hours
Number
CT Units
Kan CT-1
Kea CT-2
Puna CT-3
Kea CT-4
Kea CT-5
CT Total
Svc Hours
Failed Starts
Unit Trips
4800:00
4320:00
3840:00
3360:00
2880:00
2400:00
1920:00
1440:00
960:00
480:00
0:00
30
25
20
15
10
5
0
99:40
2240:30
1299:51
564:28
2:06
4206:37
7
14
7
7
1
0
0
28
16

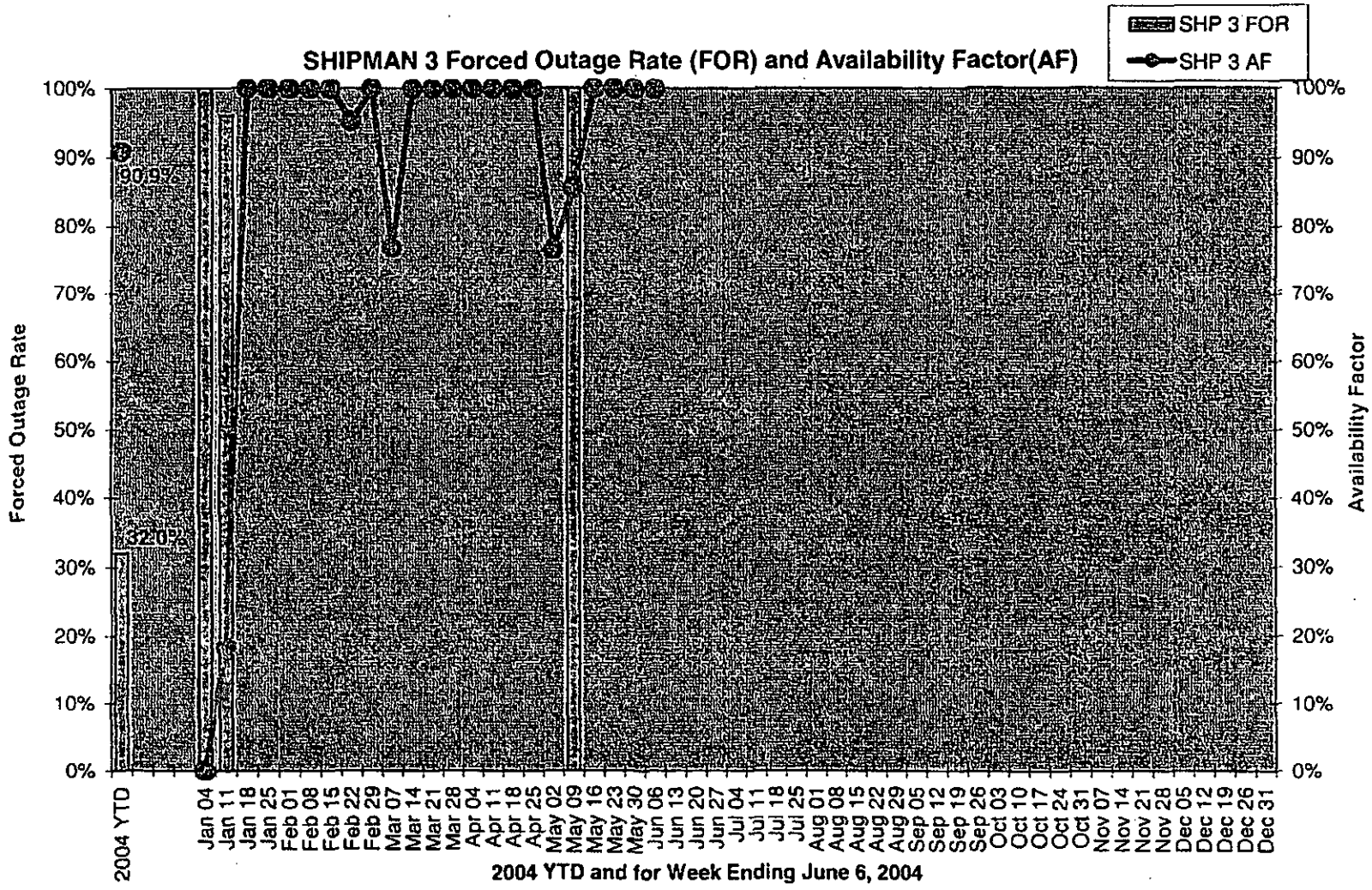
SHIPMAN 3 Forced Outage Rate (FOR) and Availability Factor(AF)
SHP 3 FOR
SHP 3 AF
Forced Outage Rate
Availability Factor
100%
90%
80%
70%
60%
50%
40%
30%
20%
10%
0%
90.9%
32.0%
2004 YTD
Jan 04
Jan 11
Jan 18
Jan 25
Feb 01
Feb 08
Feb 15
Feb 22
Feb 29
Mar 07
Mar 14
Mar 21
Mar 28
Apr 04
Apr 11
Apr 18
Apr 25
May 02
May 09
May 16
May 23
May 30
Jun 06
Jun 13
Jun 20
Jun 27
Jul 04
Jul 11
Jul 18
Jul 25
Aug 01
Aug 08
Aug 15
Aug 22
Aug 29
Sep 05
Sep 12
Sep 19
Sep 26
Oct 03
Oct 10
Oct 17
Oct 24
Oct 31
Nov 07
Nov 14
Nov 21
Nov 28
Dec 05
Dec 12
Dec 19
Dec 26
Dec 31
2004 YTD and for Week Ending June 6, 2004

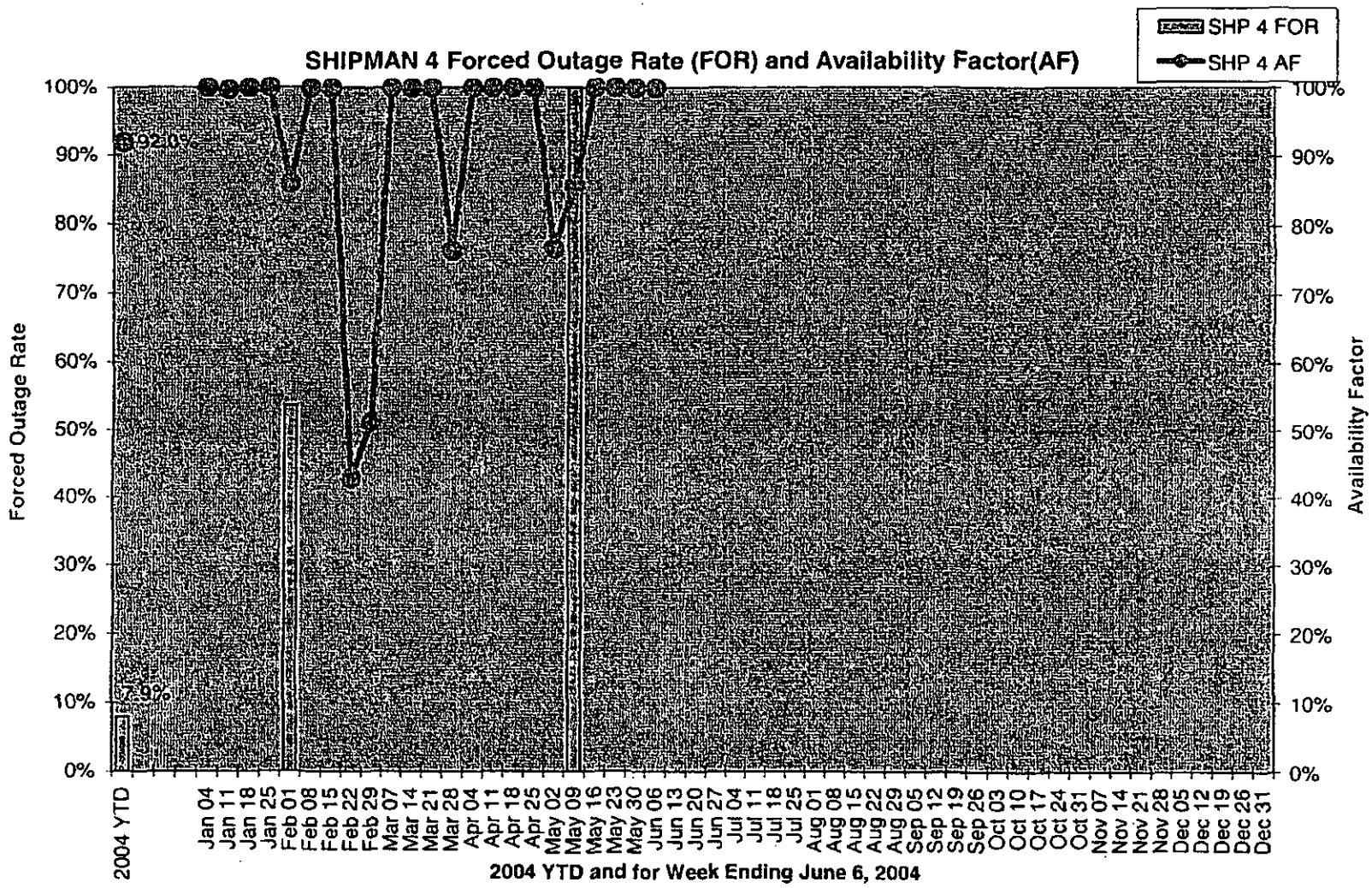
SHIPMAN 4 Forced Outage Rate (FOR) and Availability Factor(AF)
SHP 4 FOR
SHP 4 AF
Forced Outage Rate
Availability Factor
100%
90%
80%
70%
60%
50%
40%
30%
20%
10%
0%
92.0%
7.9%
2004 YTD
Jan 04
Jan 11
Jan 18
Jan 25
Feb 01
Feb 08
Feb 15
Feb 22
Feb 29
Mar 07
Mar 14
Mar 21
Mar 28
Apr 04
Apr 11
Apr 18
Apr 25
May 02
May 09
May 16
May 23
May 30
Jun 06
Jun 13
Jun 20
Jun 27
Jul 04
Jul 11
Jul 18
Jul 25
Aug 01
Aug 08
Aug 15
Aug 22
Aug 29
Sep 05
Sep 12
Sep 19
Sep 26
Oct 03
Oct 10
Oct 17
Oct 24
Oct 31
Nov 07
Nov 14
Nov 21
Nov 28
Dec 05
Dec 12
Dec 19
Dec 26
Dec 31
2004 YTD and for Week Ending June 6, 2004

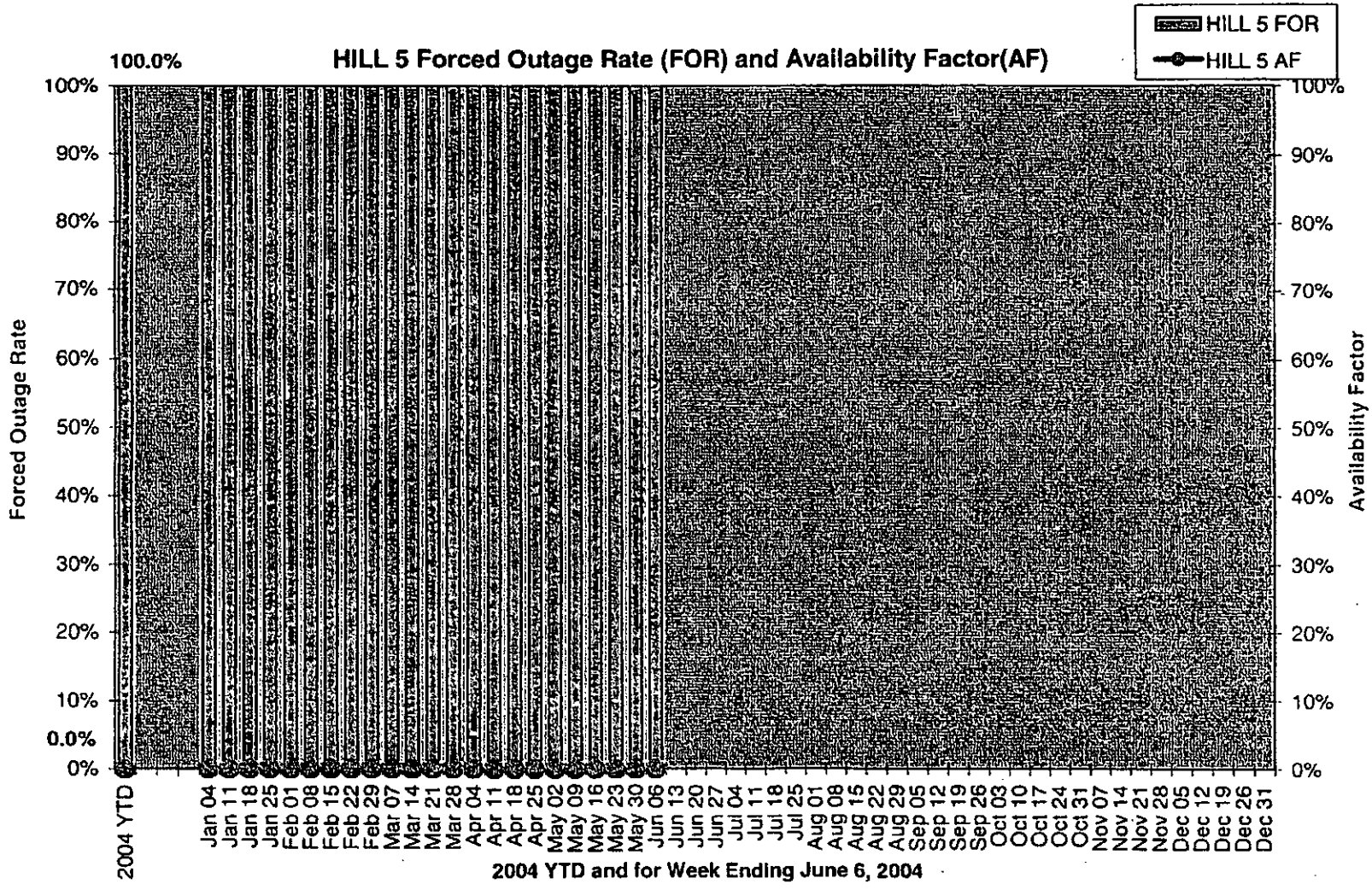
HILL 5 Forced Outage Rate (FOR) and Availability Factor(AF)
HILL 5 FOR
HILL 5 AF
100.0%
Forced Outage Rate
Availability Factor
100%
90%
80%
70%
60%
50%
40%
30%
20%
10%
0.0%
0%
2004 YTD
Jan 04
Jan 11
Jan 18
Jan 25
Feb 01
Feb 08
Feb 15
Feb 22
Feb 29
Mar 07
Mar 14
Mar 21
Mar 28
Apr 04
Apr 11
Apr 18
Apr 25
May 02
May 09
May 16
May 23
May 30
Jun 06
Jun 13
Jun 20
Jun 27
Jul 04
Jul 11
Jul 18
Jul 25
Aug 01
Aug 08
Aug 15
Aug 22
Aug 29
Sep 05
Sep 12
Sep 19
Sep 26
Oct 03
Oct 10
Oct 17
Oct 24
Oct 31
Nov 07
Nov 14
Nov 21
Nov 28
Dec 05
Dec 12
Dec 19
Dec 26
Dec 31
2004 YTD and for Week Ending June 6, 2004

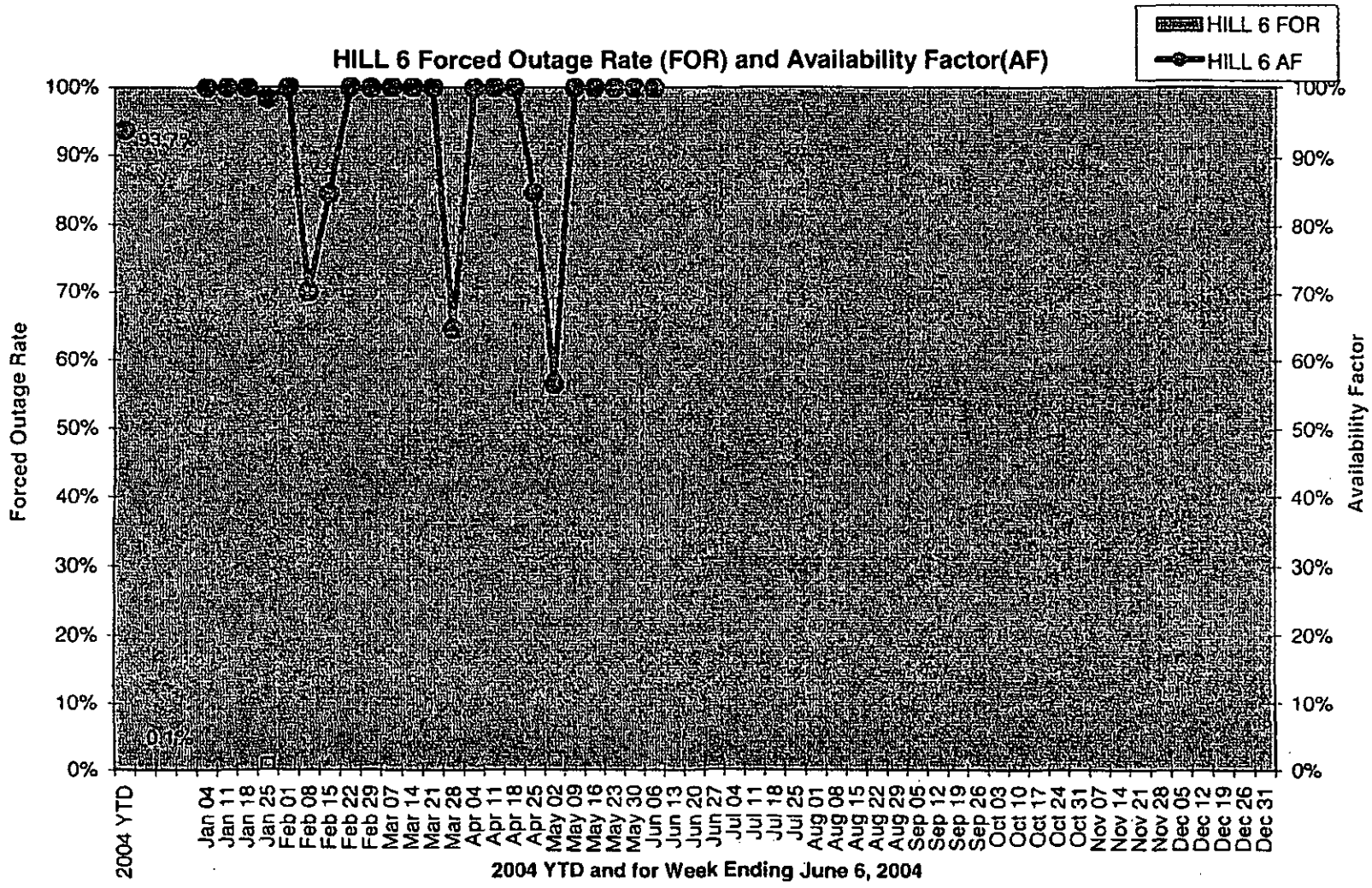
HILL 6 Forced Outage Rate (FOR) and Availability Factor(AF)
HILL 6 FOR
HILL 6 AF
Forced Outage Rate
Availability Factor
100%
90%
80%
70%
60%
50%
40%
30%
20%
10%
0%
93.7%
.01%
2004 YTD
Jan 04
Jan 11
Jan 18
Jan 25
Feb 01
Feb 08
Feb 15
Feb 22
Feb 29
Mar 07
Mar 14
Mar 21
Mar 28
Apr 04
Apr 11
Apr 18
Apr 25
May 02
May 09
May 16
May 23
May 30
Jun 06
Jun 13
Jun 20
Jun 27
Jul 04
Jul 11
Jul 18
Jul 25
Aug 01
Aug 08
Aug 15
Aug 22
Aug 29
Sep 05
Sep 12
Sep 19
Sep 26
Oct 03
Oct 10
Oct 17
Oct 24
Oct 31
Nov 07
Nov 14
Nov 21
Nov 28
Dec 05
Dec 12
Dec 19
Dec 26
Dec 31
2004 YTD and for Week Ending June 6, 2004

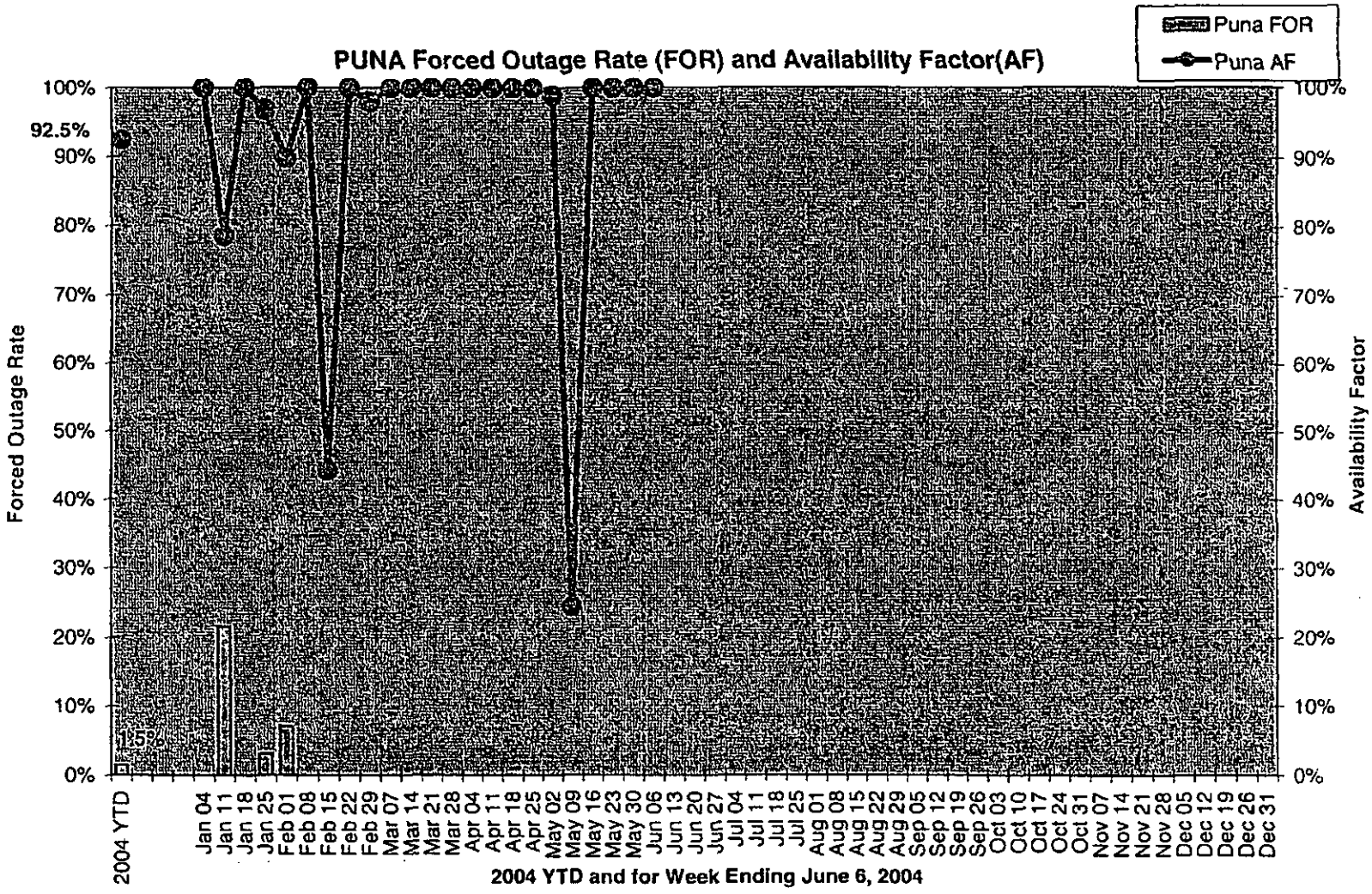
PUNA Forced Outage Rate (FOR) and Availability Factor(AF)
Puna FOR
Puna AF
Forced Outage Rate
Availability Factor
100%
92.5%
90%
80%
70%
60%
50%
40%
30%
20%
10%
0%
15%
2004 YTD
Jan 04
Jan 11
Jan 18
Jan 25
Feb 01
Feb 08
Feb 15
Feb 22
Feb 29
Mar 07
Mar 14
Mar 21
Mar 28
Apr 04
Apr 11
Apr 18
Apr 25
May 02
May 09
May 16
May 23
May 30
Jun 06
Jun 13
Jun 20
Jun 27
Jul 04
Jul 11
Jul 18
Jul 25
Aug 01
Aug 08
Aug 15
Aug 22
Aug 29
Sep 05
Sep 12
Sep 19
Sep 26
Oct 03
Oct 10
Oct 17
Oct 24
Oct 31
Nov 07
Nov 14
Nov 21
Nov 28
Dec 05
Dec 12
Dec 19
Dec 26
Dec 31
2004 YTD and for Week Ending June 6, 2004

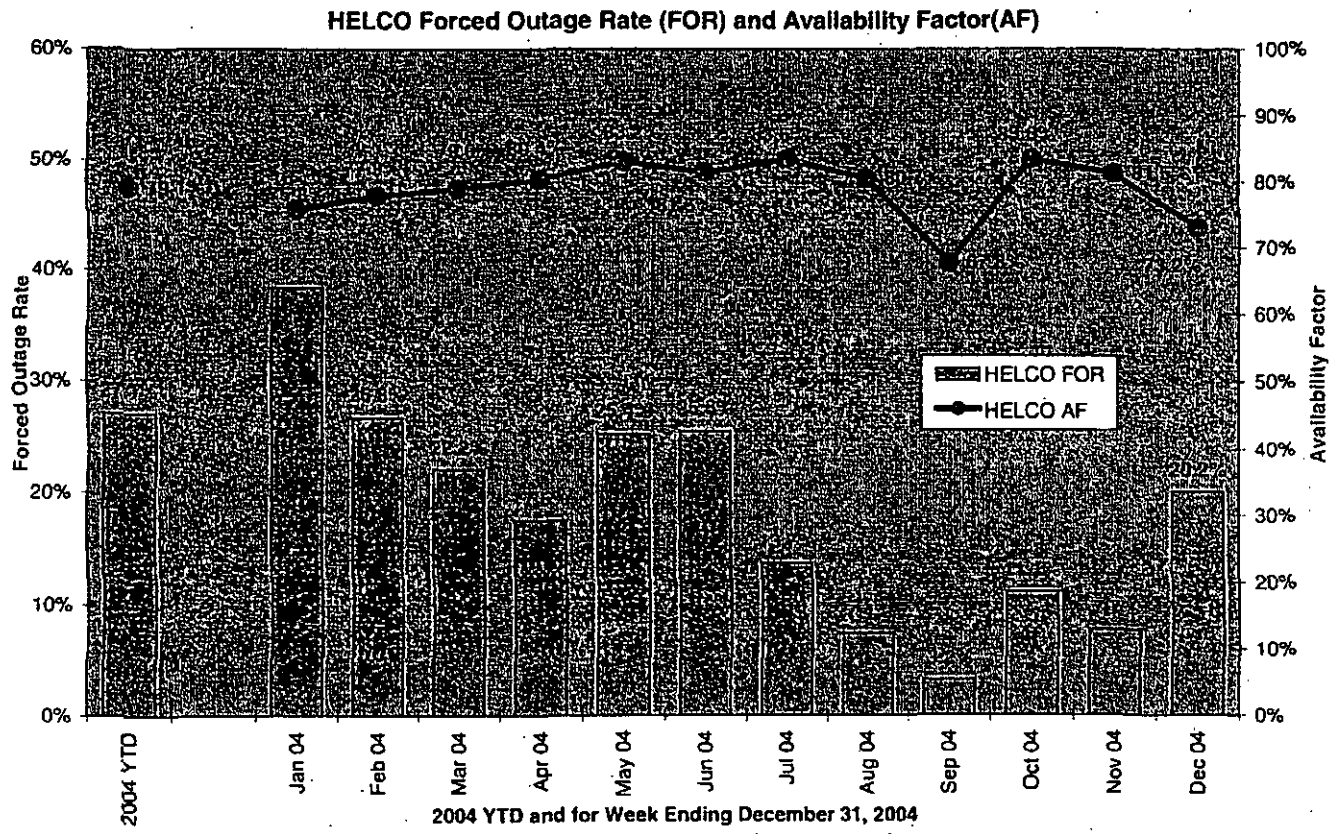
HELCO Forced Outage Rate (FOR) and Availability Factor(AF)
Forced Outage Rate
Availability Factor
60%
50%
40%
30%
20%
10%
0%
100%
90%
80%
70%
60%
50%
40%
30%
20%
10%
0%
HELCO FOR
HELCO AF
2004 YTD
Jan 04
Feb 04
Mar 04
Apr 04
May 04
Jun 04
Jul 04
Aug 04
Sep 04
Oct 04
Nov 04
Dec 04
2004 YTD and for Week Ending December 31, 2004

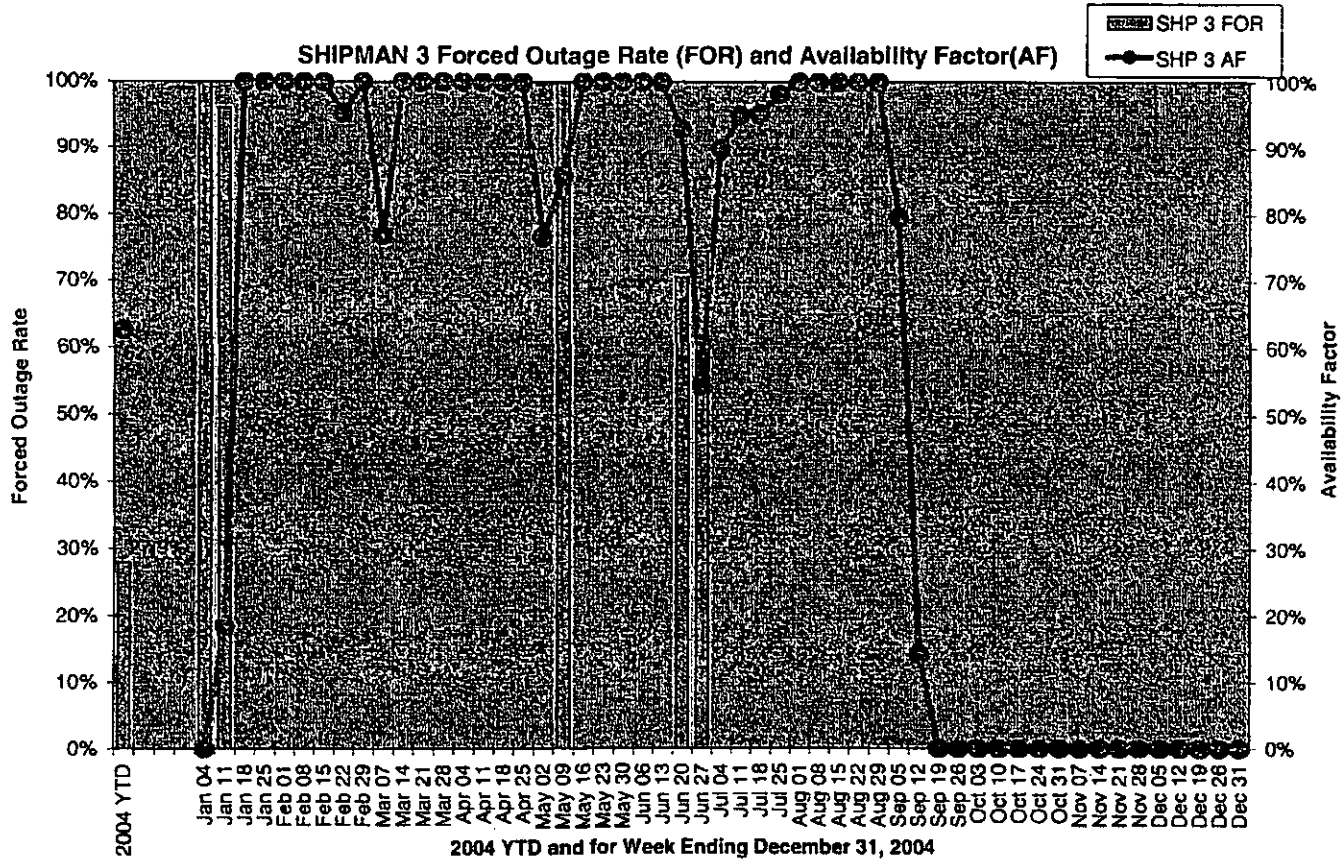
SHIPMAN 3 Forced Outage Rate (FOR) and Availability Factor(AF)
SHP 3 FOR
SHP 3 AF
Forced Outage Rate
Availability Factor
100%
90%
80%
70%
60%
50%
40%
30%
20%
10%
0%
2004 YTD
Jan 04
Jan 11
Jan 18
Jan 25
Feb 01
Feb 08
Feb 15
Feb 22
Feb 29
Mar 07
Mar 14
Mar 21
Mar 28
Apr 04
Apr 11
Apr 18
Apr 25
May 02
May 09
May 16
May 23
May 30
Jun 06
Jun 13
Jun 20
Jun 27
Jul 04
Jul 11
Jul 18
Jul 25
Aug 01
Aug 08
Aug 15
Aug 22
Aug 29
Sep 05
Sep 12
Sep 19
Sep 26
Oct 03
Oct 10
Oct 17
Oct 24
Oct 31
Nov 07
Nov 14
Nov 21
Nov 28
Dec 05
Dec 12
Dec 19
Dec 26
Dec 31
2004 YTD and for Week Ending December 31, 2004

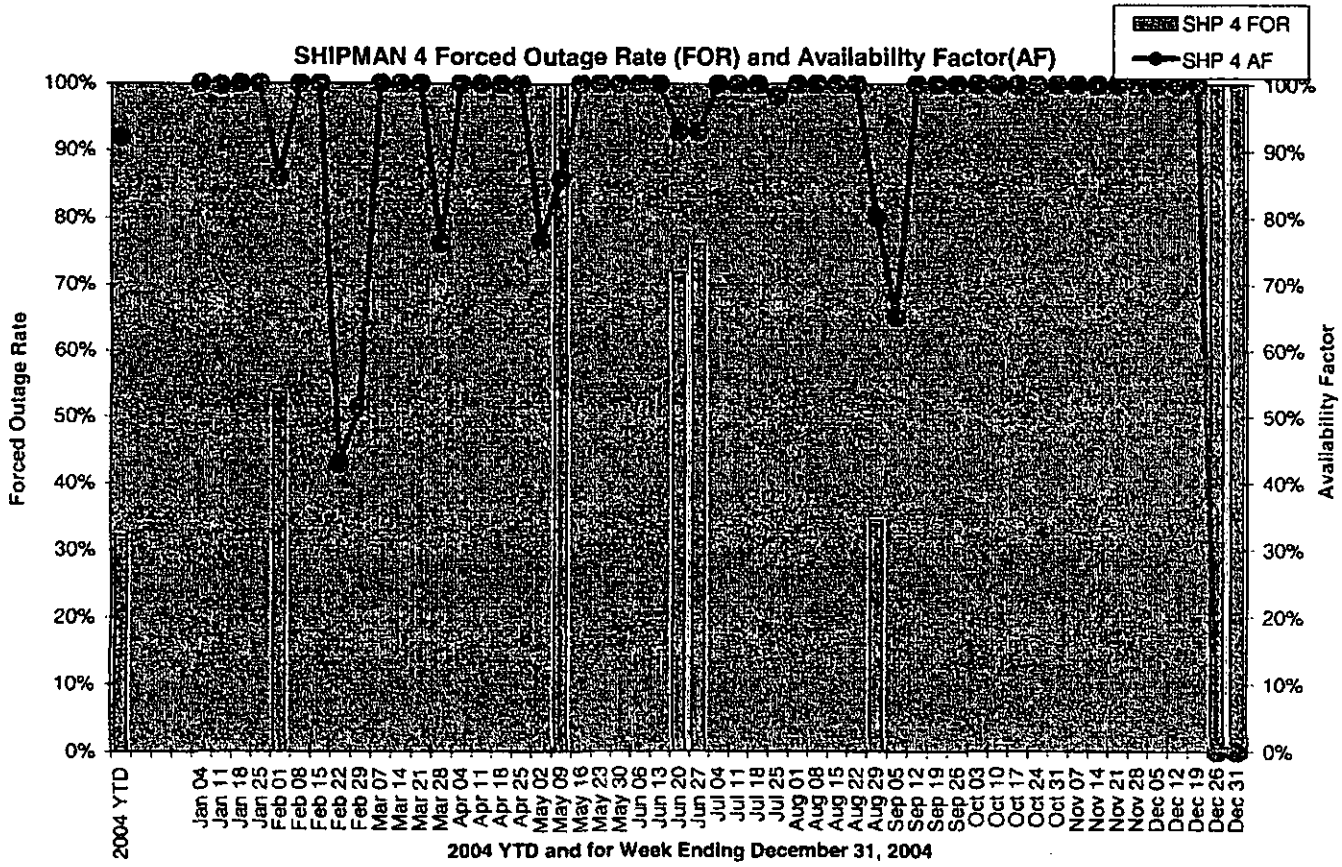
SHIPMAN 4 Forced Outage Rate (FOR) and Availability Factor(AF)
SHP 4 FOR
SHP 4 AF
Forced Outage Rate
Availability Factor
100%
90%
80%
70%
60%
50%
40%
30%
20%
10%
0%
2004 YTD
Jan 04
Jan 11
Jan 18
Jan 25
Feb 01
Feb 08
Feb 15
Feb 22
Feb 29
Mar 07
Mar 14
Mar 21
Mar 28
Apr 04
Apr 11
Apr 18
Apr 25
May 02
May 09
May 16
May 23
May 30
Jun 06
Jun 13
Jun 20
Jun 27
Jul 04
Jul 11
Jul 18
Jul 25
Aug 01
Aug 08
Aug 15
Aug 22
Aug 29
Sep 05
Sep 12
Sep 19
Sep 26
Oct 03
Oct 10
Oct 17
Oct 24
Oct 31
Nov 07
Nov 14
Nov 21
Nov 28
Dec 05
Dec 12
Dec 19
Dec 26
Dec 31
2004 YTD and for Week Ending December 31, 2004

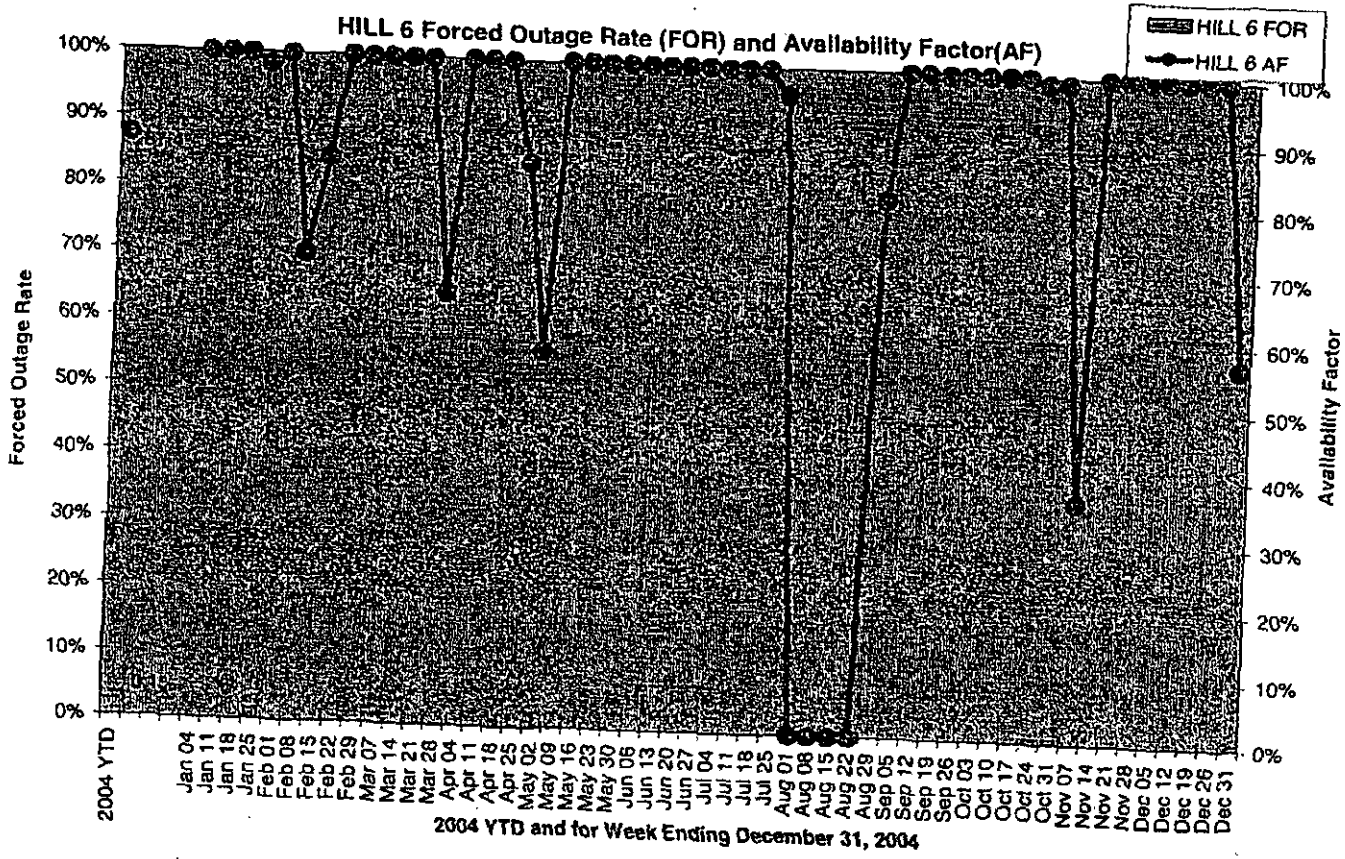
HILL 6 Forced Outage Rate (FOR) and Availability Factor(AF)
HILL 6 FOR
HILL 6 AF
Forced Outage Rate
Availability Factor
100%
90%
80%
70%
60%
50%
40%
30%
20%
10%
0%
2004 YTD
Jan 04
Jan 11
Jan 18
Jan 25
Feb 01
Feb 08
Feb 15
Feb 22
Feb 29
Mar 07
Mar 14
Mar 21
Mar 28
Apr 04
Apr 11
Apr 18
Apr 25
May 02
May 09
May 16
May 23
May 30
Jun 06
Jun 13
Jun 20
Jun 27
Jul 04
Jul 11
Jul 18
Jul 25
Aug 01
Aug 08
Aug 15
Aug 22
Aug 29
Sep 05
Sep 12
Sep 19
Sep 26
Oct 03
Oct 10
Oct 17
Oct 24
Oct 31
Nov 07
Nov 14
Nov 21
Nov 28
Dec 05
Dec 12
Dec 19
Dec 26
Dec 31
2004 YTD and for Week Ending December 31, 2004

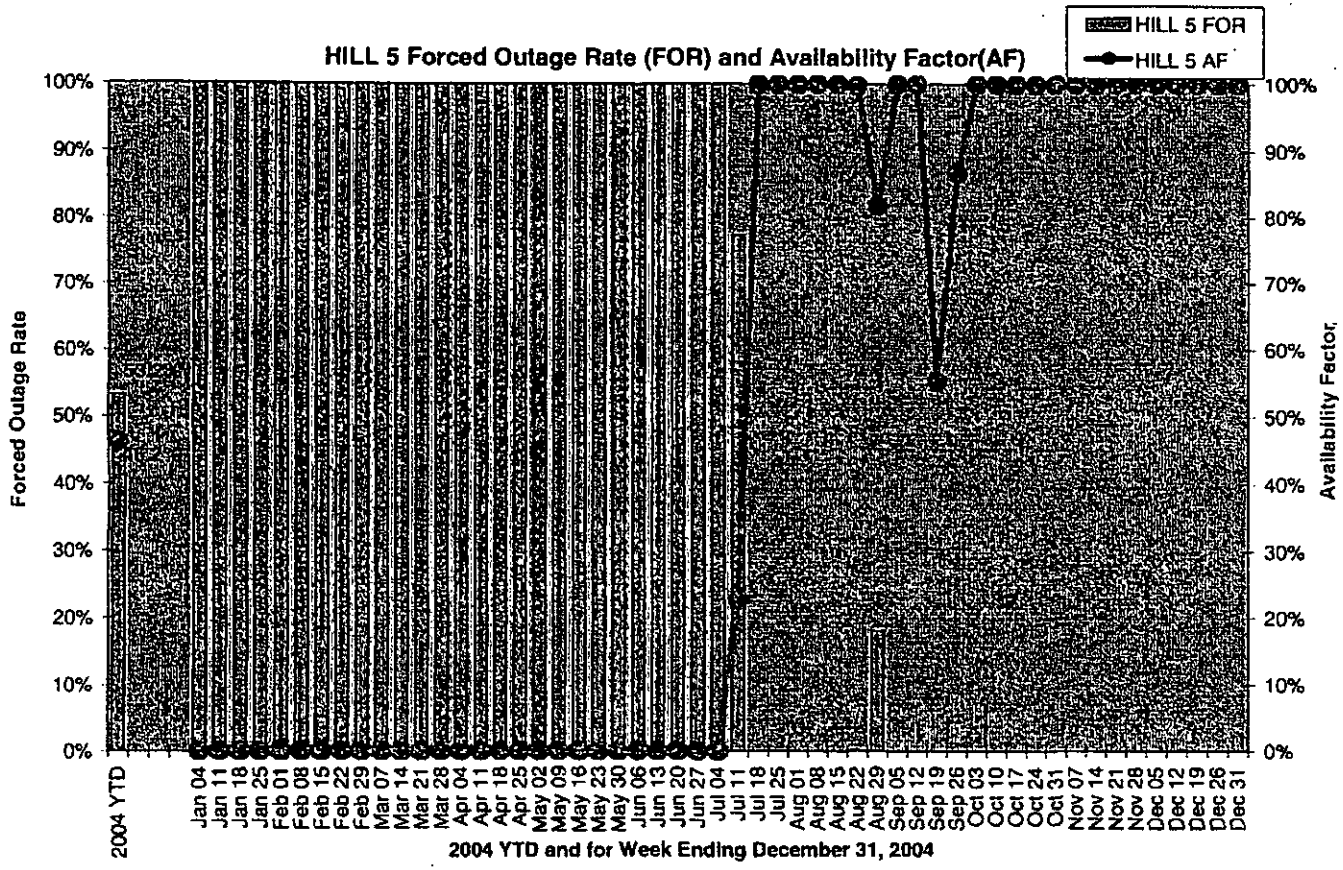
HILL 5 Forced Outage Rate (FOR) and Availability Factor(AF)
HILL 5 FOR
HILL 5 AF
Forced Outage Rate
Availability Factor
100%
90%
80%
70%
60%
50%
40%
30%
20%
10%
0%
2004 YTD
Jan 04
Jan 11
Jan 18
Jan 25
Feb 01
Feb 08
Feb 15
Feb 22
Feb 29
Mar 07
Mar 14
Mar 21
Mar 28
Apr 04
Apr 11
Apr 18
Apr 25
May 02
May 09
May 16
May 23
May 30
Jun 06
Jun 13
Jun 20
Jun 27
Jul 04
Jul 11
Jul 18
Jul 25
Aug 01
Aug 08
Aug 15
Aug 22
Aug 29
Sep 05
Sep 12
Sep 19
Sep 26
Oct 03
Oct 10
Oct 17
Oct 24
Oct 31
Nov 07
Nov 14
Nov 21
Nov 28
Dec 05
Dec 12
Dec 19
Dec 26
Dec 31
2004 YTD and for Week Ending December 31, 2004

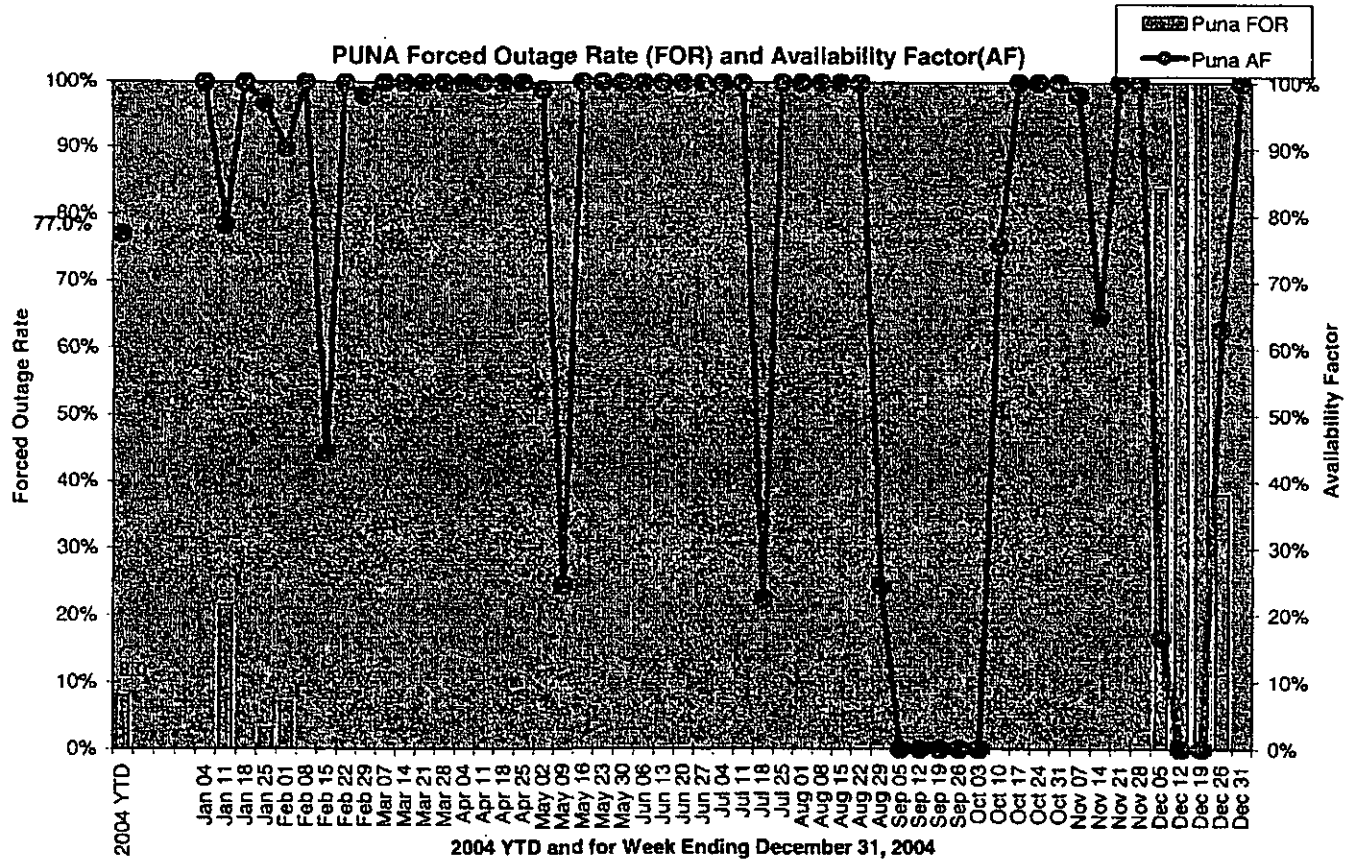

CA-IR-253
DOCKET NO. 05-0315
ATTACHMENT 2
PAGE 6 OF 16

DATA

Week #			week1	week2	week3	week4	week5	week6	week7	week8	week9	week10	week11	week12	week13	week14	week15	week16	week17	week18
For Week Ending and Year-to date		2004 YTD	Jan 04	Jan 11	Jan 18	Jan 25	Feb 01	Feb 08	Feb 15	Feb 22	Feb 29	Mar 07	Mar 14	Mar 21	Mar 28	Apr 04	Apr 11	Apr 18	Apr 25	May 02
Shp 3 Weekly FOR	SHP 3 FOR	27.9%	100.0%	96.1%	0.0%	0.0%	0.0%	0.0%	0.0%	0.0%	0.0%	0.0%	0.0%	0.0%	0.0%	0.0%	0.0%	0.0%	0.0%	0.0%
Shp 3 Year To Date FOR			100.0%	97.7%	83.9%	75.0%	70.6%	68.6%	61.8%	60.1%	55.1%	50.6%	49.5%	40.6%	36.9%	36.5%	36.2%	33.0%	32.3%	31.1%
Shp 3 Weekly AF	SHP 3 AF	62.6%	0.0%	18.5%	100.0%	100.0%	100.0%	100.0%	100.0%	95.3%	100.0%	76.8%	100.0%	100.0%	100.0%	100.0%	100.0%	100.0%	100.0%	76.5%
Shp 3 Year To Date AF			0.0%	11.7%	46.1%	61.2%	69.7%	75.1%	78.9%	81.1%	83.3%	82.6%	84.2%	85.6%	86.7%	87.7%	88.6%	89.3%	89.9%	89.2%
Shp 4 Weekly FOR	SHP 4 FOR	32.2%	0.0%	0.0%	0.0%	0.0%	53.7%	0.0%	0.0%	0.0%	0.0%	0.0%	0.0%	0.0%	0.0%	0.0%	0.0%	0.0%	0.0%	0.0%
Shp 4 Year To Date FOR			0.0%	0.0%	0.0%	0.0%	17.5%	17.0%	14.1%	14.1%	11.1%	9.6%	9.2%	6.8%	6.0%	5.9%	5.8%	4.9%	4.7%	4.5%
Shp 4 Weekly AF	SHP 4 AF	91.9%	100.0%	99.7%	100.0%	100.0%	86.0%	100.0%	100.0%	42.9%	51.3%	100.0%	100.0%	100.0%	76.2%	100.0%	100.0%	100.0%	100.0%	76.5%
Shp 4 Year To Date AF			100.0%	99.8%	99.9%	99.9%	96.9%	97.4%	97.8%	90.8%	86.0%	87.4%	88.6%	89.6%	88.5%	89.4%	90.1%	90.8%	91.3%	90.5%
Hill 6 Weekly FOR	HILL 6 FOR	0.1%	0.0%	0.0%	0.0%	1.7%	0.0%	0.0%	0.0%	0.0%	0.1%	0.0%	0.0%	0.0%	0.0%	0.0%	0.0%	0.0%	0.0%	0.0%
Hill 6 Year To Date FOR			0.0%	0.0%	0.0%	0.5%	0.4%	0.3%	0.3%	0.2%	0.2%	0.2%	0.2%	0.2%	0.2%	0.1%	0.1%	0.1%	0.1%	0.1%
Hill 6 Weekly AF	HILL 6 AF	87.4%	100.0%	100.0%	100.0%	98.3%	100.0%	70.0%	84.5%	100.0%	99.9%	100.0%	100.0%	100.0%	64.7%	100.0%	100.0%	100.0%	84.7%	55.5%
Hill 6 Year To Date AF			100.0%	100.0%	100.0%	99.5%	99.6%	94.3%	92.8%	93.8%	94.5%	95.1%	95.5%	95.9%	93.4%	93.9%	94.3%	94.7%	94.1%	92.0%
Hill 5 Weekly FOR	HILL 5 FOR	53.2%	100.0%	100.0%	100.0%	100.0%	100.0%	100.0%	100.0%	100.0%	100.0%	100.0%	100.0%	100.0%	100.0%	100.0%	100.0%	100.0%	100.0%	100.0%
Hill 5 Year To Date FOR			100.0%	100.0%	100.0%	100.0%	100.0%	100.0%	100.0%	100.0%	100.0%	100.0%	100.0%	100.0%	100.0%	100.0%	100.0%	100.0%	100.0%	100.0%
Hill 5 Weekly AF	HILL 5 AF	46.2%	0.0%	0.0%	0.0%	0.0%	0.0%	0.0%	0.0%	0.0%	0.0%	0.0%	0.0%	0.0%	0.0%	0.0%	0.0%	0.0%	0.0%	0.0%
Hill 5 Year To Date AF			0.0%	0.0%	0.0%	0.0%	0.0%	0.0%	0.0%	0.0%	0.0%	0.0%	0.0%	0.0%	0.0%	0.0%	0.0%	0.0%	0.0%	0.0%
Puna Weekly FOR	Puna FOR	8.0%	0.0%	21.5%	0.0%	3.2%	7.1%	0.0%	0.0%	0.0%	0.0%	0.0%	0.0%	0.0%	0.0%	0.0%	0.0%	0.0%	0.0%	0.0%
Puna Year To Date FOR			0.0%	13.7%	8.4%	6.9%	7.0%	5.7%	5.3%	4.5%	4.0%	3.5%	3.2%	2.9%	2.6%	2.4%	2.3%	2.1%	2.0%	1.9%
Puna Weekly AF	Puna AF	77.0%	100.0%	78.5%	100.0%	96.8%	89.8%	100.0%	44.3%	100.0%	98.0%	100.0%	100.0%	100.0%	100.0%	100.0%	100.0%	100.0%	100.0%	98.9%
Puna Year To Date AF			100.0%	86.3%	91.6%	93.1%	92.4%	93.7%	86.2%	88.0%	89.2%	90.3%	91.2%	92.0%	92.6%	93.2%	93.6%	94.1%	94.4%	94.7%

DATA

Week #			week19	week20	week21	week22	week23	week24	week25	week26	week27	week28	week29	week30	week31	week32	week33	week34	week35	week36	week37
For Week Ending and Year-to date		2004 YTD	May 08	May 15	May 29	May 30	Jun 06	Jun 13	Jun 20	Jun 27	Jul 04	Jul 11	Jul 18	Jul 25	Aug 01	Aug 08	Aug 15	Aug 22	Aug 29	Sep 05	Sep 12
Shp 3 Weekly FOR	SHP 3 FOR	27.9%	100.0%	0.0%	0.0%	0.0%	0.0%	0.0%	70.5%	74.5%	0.0%	0.0%	0.0%	0.0%	0.0%	0.0%	0.0%	0.0%	0.0%	0.0%	0.0%
Shp 3 Year To Date FOR			33.3%	33.1%	32.4%	32.2%	32.0%	32.0%	32.8%	33.6%	33.5%	33.3%	33.3%	33.1%	32.9%	32.8%	32.6%	32.4%	30.1%	28.1%	27.9%
Shp 3 Weekly AF	SHP 3 AF	82.8%	85.7%	100.0%	100.0%	100.0%	100.0%	100.0%	92.9%	54.4%	89.9%	95.1%	95.2%	98.2%	100.0%	100.0%	100.0%	100.0%	100.0%	79.8%	14.3%
Shp 3 Year To Date AF			89.0%	89.6%	90.1%	90.5%	90.9%	91.3%	91.4%	89.9%	89.9%	90.1%	90.3%	90.6%	90.9%	91.2%	91.4%	91.7%	91.9%	91.6%	89.5%
Shp 4 Weekly FOR	SHP 4 FOR	32.2%	100.0%	0.0%	0.0%	0.0%	0.0%	0.0%	71.9%	76.1%	0.0%	0.0%	0.0%	0.0%	0.0%	0.0%	0.0%	0.0%	34.5%	0.0%	0.0%
Shp 4 Year To Date FOR			8.8%	8.7%	8.3%	8.1%	7.9%	7.9%	9.6%	11.3%	11.1%	11.0%	10.9%	10.8%	10.7%	10.6%	10.5%	10.5%	13.5%	13.0%	12.9%
Shp 4 Weekly AF	SHP 4 AF	91.9%	85.7%	100.0%	100.0%	100.0%	100.0%	100.0%	92.9%	92.9%	100.0%	100.0%	100.0%	98.2%	100.0%	100.0%	100.0%	100.0%	80.1%	65.1%	100.0%
Shp 4 Year To Date AF			90.2%	90.7%	91.2%	91.6%	92.0%	92.3%	92.3%	92.3%	92.6%	92.9%	93.1%	93.3%	93.5%	93.7%	93.9%	94.1%	93.7%	92.9%	93.1%
Hill 6 Weekly FOR	HILL 6 FOR	0.1%	0.0%	0.0%	0.0%	0.0%	0.0%	0.0%	0.0%	0.0%	0.0%	0.0%	0.0%	0.0%	0.0%	0.0%	0.0%	0.0%	0.0%	0.0%	0.0%
Hill 6 Year To Date FOR			0.1%	0.1%	0.1%	0.1%	0.1%	0.1%	0.1%	0.1%	0.1%	0.1%	0.1%	0.1%	0.1%	0.1%	0.1%	0.1%	0.1%	0.1%	0.1%
Hill 6 Weekly AF	HILL 6 AF	87.4%	100.0%	100.0%	100.0%	100.0%	100.0%	100.0%	100.0%	100.0%	100.0%	100.0%	100.0%	98.1%	0.0%	0.0%	0.0%	0.0%	80.7%	100.0%	100.0%
Hill 6 Year To Date AF			92.4%	92.8%	93.1%	93.4%	93.7%	94.0%	94.2%	94.5%	94.7%	94.9%	95.1%	95.1%	92.0%	89.1%	86.3%	83.6%	83.7%	84.1%	84.6%
Hill 5 Weekly FOR	HILL 5 FOR	53.2%	100.0%	100.0%	100.0%	100.0%	100.0%	100.0%	100.0%	100.0%	100.0%	77.4%	0.0%	0.0%	0.0%	0.0%	0.0%	0.2%	18.1%	0.0%	0.0%
Hill 5 Year To Date FOR			100.0%	100.0%	100.0%	100.0%	100.0%	100.0%	100.0%	100.0%	100.0%	99.2%	95.7%	92.5%	89.4%	86.6%	84.0%	81.5%	79.6%	77.4%	75.3%
Hill 5 Weekly AF	HILL 5 AF	46.2%	0.0%	0.0%	0.0%	0.0%	0.0%	0.0%	0.0%	0.0%	0.0%	22.9%	100.0%	100.0%	100.0%	100.0%	100.0%	99.8%	81.9%	100.0%	100.0%
Hill 5 Year To Date AF			0.0%	0.0%	0.0%	0.0%	0.0%	0.0%	0.0%	0.0%	0.0%	0.8%	4.3%	7.5%	10.6%	13.4%	16.1%	18.5%	20.4%	22.6%	24.7%
Puna Weekly FOR	Puna FOR	8.0%	0.0%	0.0%	0.0%	0.0%	0.0%	0.0%	0.0%	0.0%	0.0%	0.0%	0.0%	0.0%	0.0%	0.0%	0.0%	0.0%	0.0%	0.0%	0.0%
Puna Year To Date FOR			1.8%	1.7%	1.6%	1.6%	1.5%	1.4%	1.4%	1.3%	1.3%	1.2%	1.2%	1.2%	1.1%	1.1%	1.0%	1.0%	1.0%	1.0%	1.0%
Puna Weekly AF	Puna AF	77.0%	24.5%	100.0%	100.0%	100.0%	100.0%	100.0%	100.0%	100.0%	100.0%	100.0%	22.5%	100.0%	100.0%	100.0%	100.0%	100.0%	24.6%	0.0%	0.0%
Puna Year To Date AF			90.9%	91.4%	91.8%	92.2%	92.5%	92.8%	93.1%	93.4%	93.6%	93.9%	91.4%	91.7%	91.9%	92.2%	92.4%	92.7%	90.7%	88.1%	85.7%

DATA

Week #			week38	week39	week40	week41	week42	week43	week44	week45	week46	week47	week48	week49	week50	week51	week52	week53
For Week Ending and Year-to date		2004 YTD	Sep 19	Sep 26	Oct 03	Oct 10	Oct 17	Oct 24	Oct 31	Nov 07	Nov 14	Nov 21	Nov 28	Dec 05	Dec 12	Dec 19	Dec 26	Dec 31
Shp 3 Weekly FOR	SHP 3 FOR	27.9%	0.0%	0.0%	0.0%	0.0%	0.0%	0.0%	0.0%	0.0%	0.0%	0.0%	0.0%	0.0%	0.0%	0.0%	0.0%	0.0%
Shp 3 Year To Date FOR			27.9%	27.9%	27.9%	27.9%	27.9%	27.9%	27.9%	27.9%	27.9%	27.9%	27.9%	27.9%	27.9%	27.9%	27.9%	27.9%
Shp 3 Weekly AF	SHP 3 AF	62.6%	0.0%	0.0%	0.0%	0.0%	0.0%	0.0%	0.0%	0.0%	0.0%	0.0%	0.0%	0.0%	0.0%	0.0%	0.0%	0.0%
Shp 3 Year To Date AF			87.1%	84.8%	82.7%	80.7%	78.7%	78.9%	75.1%	73.4%	71.8%	70.3%	68.8%	67.4%	66.0%	64.7%	63.5%	62.6%
Shp 4 Weekly FOR	SHP 4 FOR	32.2%	0.0%	0.0%	0.0%	0.0%	0.0%	0.0%	0.0%	0.0%	0.0%	0.0%	0.0%	0.0%	0.0%	0.0%	100.0%	100.0%
Shp 4 Year To Date FOR			12.8%	12.6%	12.6%	12.6%	12.1%	11.7%	11.5%	11.4%	11.4%	11.4%	11.4%	11.3%	11.2%	11.2%	24.8%	32.2%
Shp 4 Weekly AF	SHP 4 AF	91.9%	100.0%	100.0%	100.0%	100.0%	100.0%	100.0%	100.0%	100.0%	100.0%	100.0%	100.0%	100.0%	100.0%	100.0%	0.0%	0.0%
Shp 4 Year To Date AF			93.3%	93.5%	93.6%	93.8%	93.9%	94.1%	94.2%	94.3%	94.5%	94.6%	94.7%	94.8%	94.9%	95.0%	93.2%	91.9%
Hill 6 Weekly FOR	HILL 6 FOR	0.1%	0.0%	0.0%	0.0%	0.0%	0.0%	0.9%	0.8%	0.0%	0.0%	0.0%	0.0%	0.0%	0.0%	0.0%	0.0%	0.0%
Hill 6 Year To Date FOR			0.1%	0.1%	0.1%	0.1%	0.1%	0.1%	0.1%	0.1%	0.1%	0.1%	0.1%	0.1%	0.1%	0.1%	0.1%	0.1%
Hill 6 Weekly AF	HILL 6 AF	87.4%	100.0%	100.0%	100.0%	100.0%	100.0%	99.1%	99.2%	36.5%	100.0%	100.0%	100.0%	100.0%	100.0%	100.0%	100.0%	56.9%
Hill 6 Year To Date AF			85.0%	85.4%	85.7%	86.1%	86.4%	86.7%	87.0%	85.9%	86.2%	86.5%	86.8%	87.0%	87.3%	87.5%	87.8%	87.4%
Hill 5 Weekly FOR	HILL 5 FOR	63.2%	0.0%	0.0%	0.0%	0.0%	0.0%	0.0%	0.0%	0.0%	0.0%	0.0%	0.0%	0.0%	0.0%	0.0%	0.0%	0.0%
Hill 5 Year To Date FOR			74.2%	72.5%	70.8%	68.8%	67.2%	65.6%	64.0%	62.6%	61.2%	59.9%	58.6%	57.4%	56.2%	55.1%	54.0%	53.2%
Hill 5 Weekly AF	HILL 5 AF	46.2%	55.3%	86.8%	100.0%	100.0%	100.0%	100.0%	100.0%	100.0%	100.0%	100.0%	100.0%	100.0%	100.0%	100.0%	100.0%	100.0%
Hill 5 Year To Date AF			25.5%	27.1%	29.0%	30.7%	32.4%	34.0%	35.5%	36.9%	38.3%	39.7%	40.9%	42.1%	43.3%	44.4%	45.5%	46.2%
Puna Weekly FOR	Puna FOR	8.0%	0.0%	0.0%	0.0%	0.0%	0.0%	0.0%	0.0%	0.0%	0.0%	0.0%	0.0%	84.2%	100.0%	100.0%	39.1%	0.0%
Puna Year To Date FOR			1.0%	1.0%	1.0%	1.0%	0.9%	0.9%	0.9%	0.9%	0.9%	0.8%	0.8%	2.9%	5.2%	7.5%	8.2%	8.0%
Puna Weekly AF	Puna AF	77.0%	0.0%	0.0%	0.0%	75.5%	100.0%	100.0%	100.0%	96.2%	64.9%	100.0%	100.0%	16.8%	0.0%	0.0%	63.0%	100.0%
Puna Year To Date AF			83.4%	81.3%	79.2%	79.1%	79.6%	80.1%	80.6%	81.0%	80.6%	81.0%	81.4%	80.1%	78.5%	76.9%	76.7%	77.0%

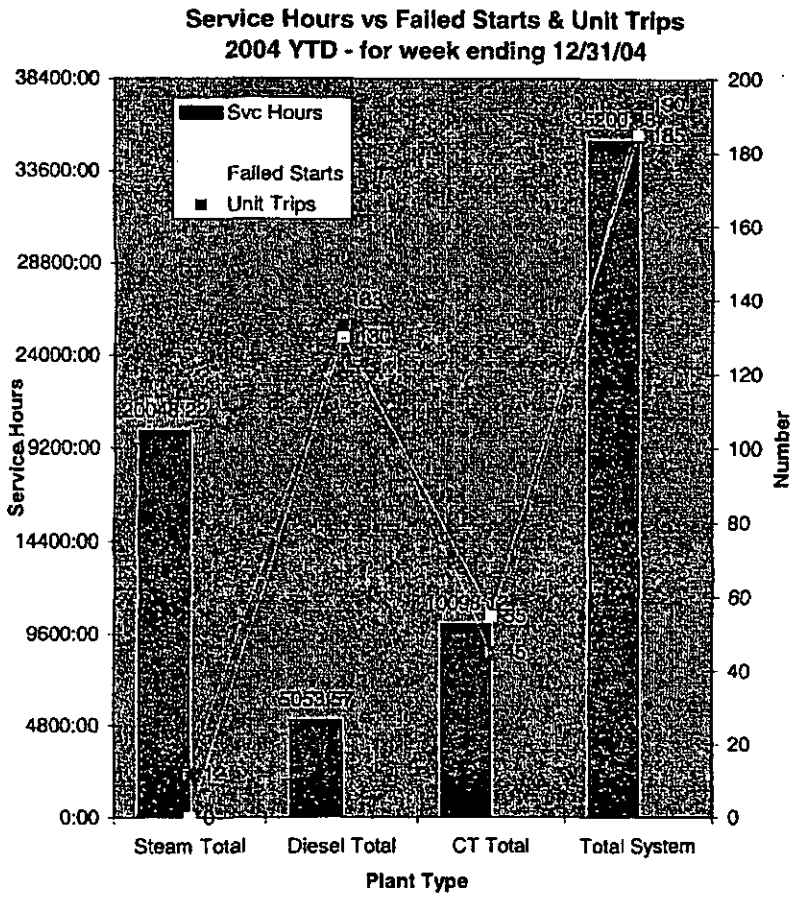
Service Hours vs Failed Starts & Unit Trips
2004 YTD - for week ending 12/31/04
Svc Hours
Failed Starts
Unit Trips
Service Hours
Number
38400:00
33600:00
28800:00
24000:00
9200:00
14400:00
9600:00
4800:00
0:00
200
180
160
140
120
100
80
60
40
20
0
Steam Total
Diesel Total
CT Total
Total System
Plant Type

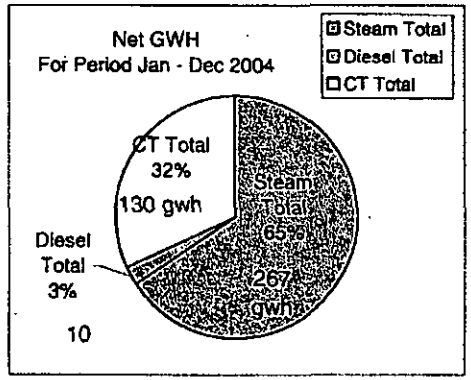
Net GWH
For Period Jan - Dec 2004
Steam Total
Diesel Total
CT Total
CT Total
32%
130 gwh
Diesel
Total
3%
10
Steam
Total
65%
267
gwh

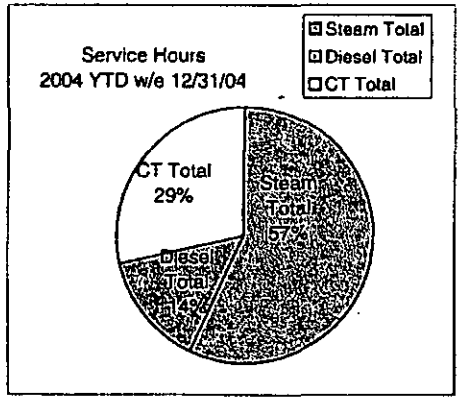
Service Hours
2004 YTD w/e 12/31/04
Steam Total
Diesel Total
CT Total
CT Total
29%
Diesel
Total
14%
Steam
Total
57%

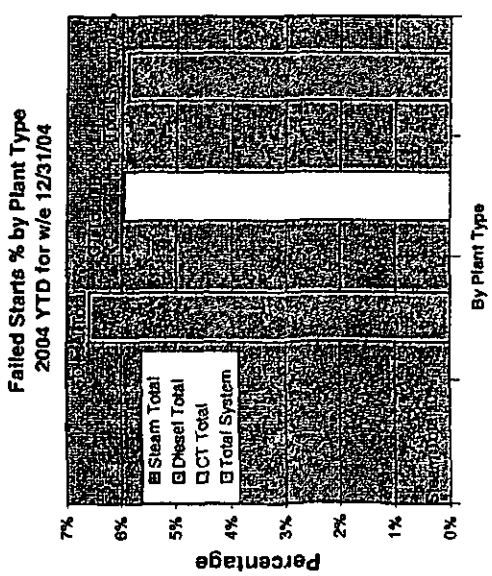
Failed Starts % by Plant Type
2004 YTD for w/e 12/31/04
Steam Total
Diesel Total
CT Total
Total System
Percentage
7%
6%
5%
4%
3%
2%
1%
0%
By Plant Type

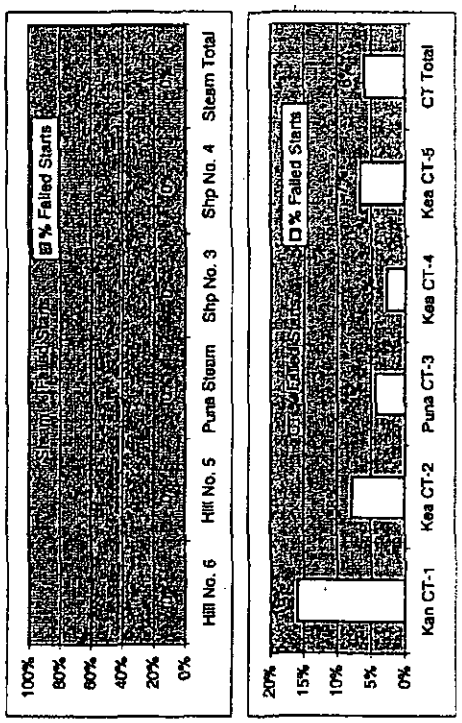
% Failed Starts
100%
80%
60%
40%
20%
0%
Hill No. 6
Hill No. 5
Puna Steam
Shp No. 3
Shp No. 4
Steam Total
% Failed Starts
20%
15%
10%
5%
0%
Kan CT-1
Kea CT-2
Puna CT-3
Kea CT-4
Kea CT-5
CT Total

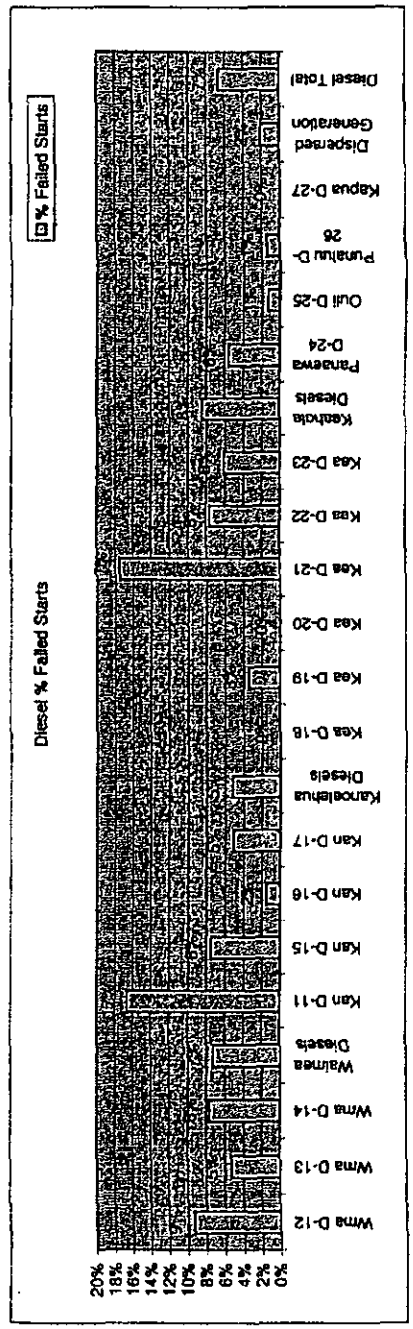
Diesel % Failed Starts
% Failed Starts
20%
18%
16%
14%
12%
10%
8%
6%
4%
2%
0%
Wma D-12
Wma D-13
Wma D-14
Waimea Diesels
Kan D-11
Kan D-15
Kan D-16
Kan D-17
Kanoelehua Diesels
Kea D-18
Kea D-19
Kea D-20
Kea D-21
Kea D-22
Kea D-23
Keahole Diesels
Panaewa D-24
Ouli D-25
Punaluu D-26
Kapua D-27
Dispersed Generation
Diesel Total

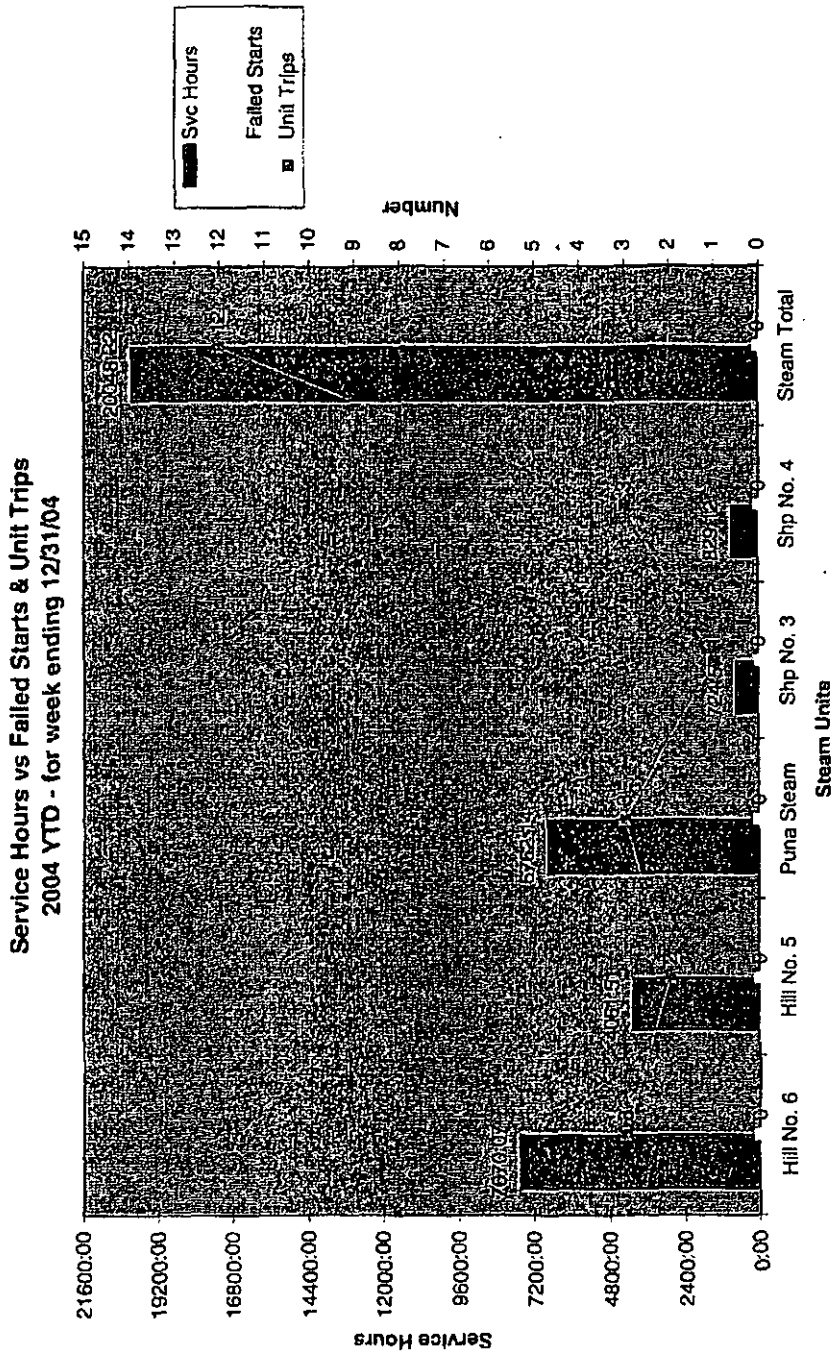
Service Hours vs Failed Starts & Unit Trips
2004 YTD - for week ending 12/31/04
Svc Hours
Failed Starts
Unit Trips
Number
Service Hours
21600:00
19200:00
16800:00
14400:00
12000:00
9600:00
7200:00
4800:00
2400:00
0:00
15
14
13
12
11
10
9
8
7
6
5
4
3
2
1
0
Hill No. 6
Hill No. 5
Puna Steam
Shp No. 3
Shp No. 4
Steam Total
Steam Units

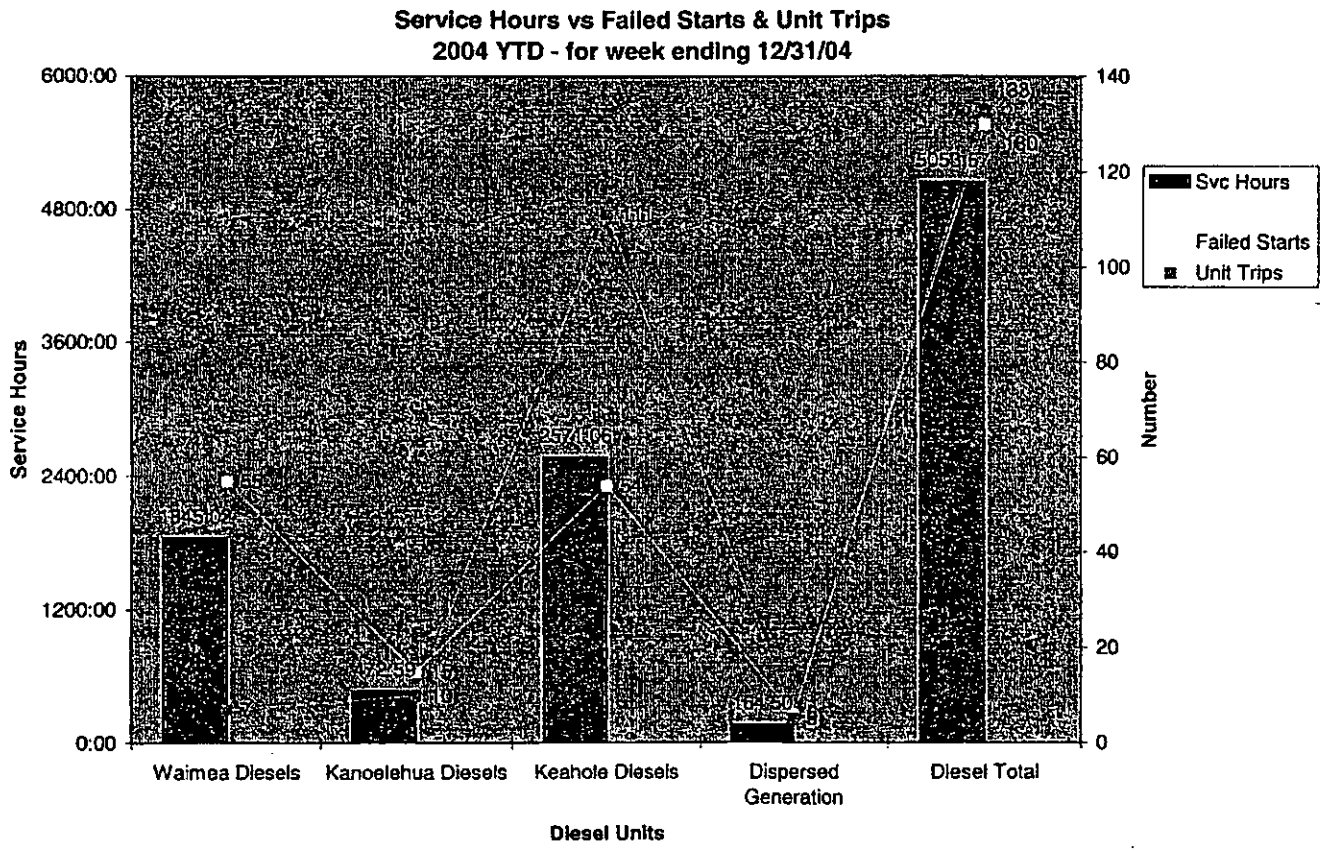
Service Hours vs Failed Starts & Unit Trips
2004 YTD - for week ending 12/31/04
Service Hours
6000:00
4800:00
3600:00
2400:00
1200:00
0:00
Number
140
120
100
80
60
40
20
0
Svc Hours
Failed Starts
Unit Trips
Waimea Diesels
Kanoelehua Diesels
Keahole Diesels
Dispersed Generation
Diesel Total
Diesel Units

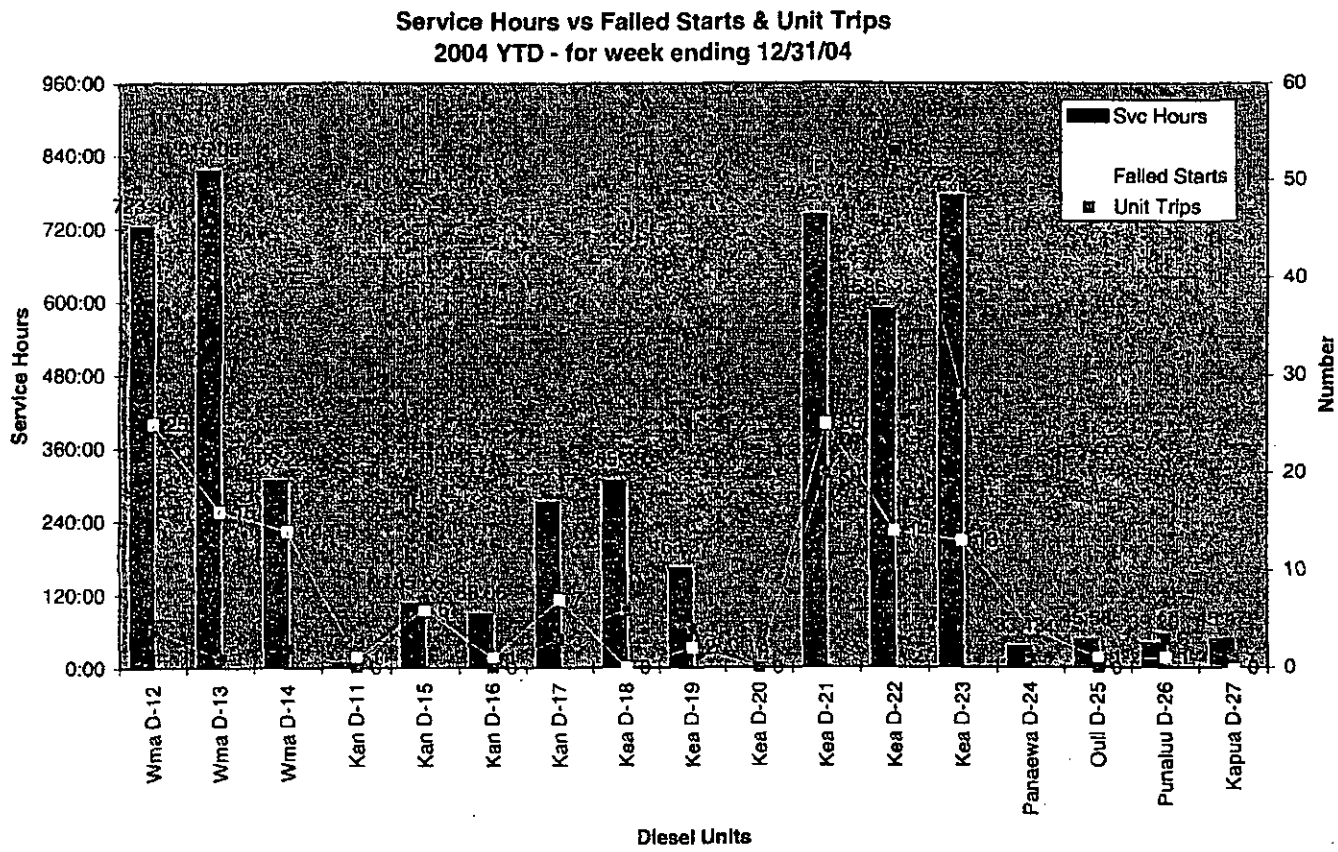
Service Hours vs Failed Starts & Unit Trips
2004 YTD - for week ending 12/31/04
Service Hours
960:00
840:00
720:00
600:00
480:00
360:00
240:00
120:00
0:00
Number
60
50
40
30
20
10
0
Svc Hours
Failed Starts
Unit Trips
Wma D-12
Wma D-13
Wma D-14
Kan D-11
Kan D-15
Kan D-16
Kan D-17
Kea D-18
Kea D-19
Kea D-20
Kea D-21
Kea D-22
Kea D-23
Panaewa D-24
Ouli D-25
Punaluu D-26
Kapua D-27
Diesel Units

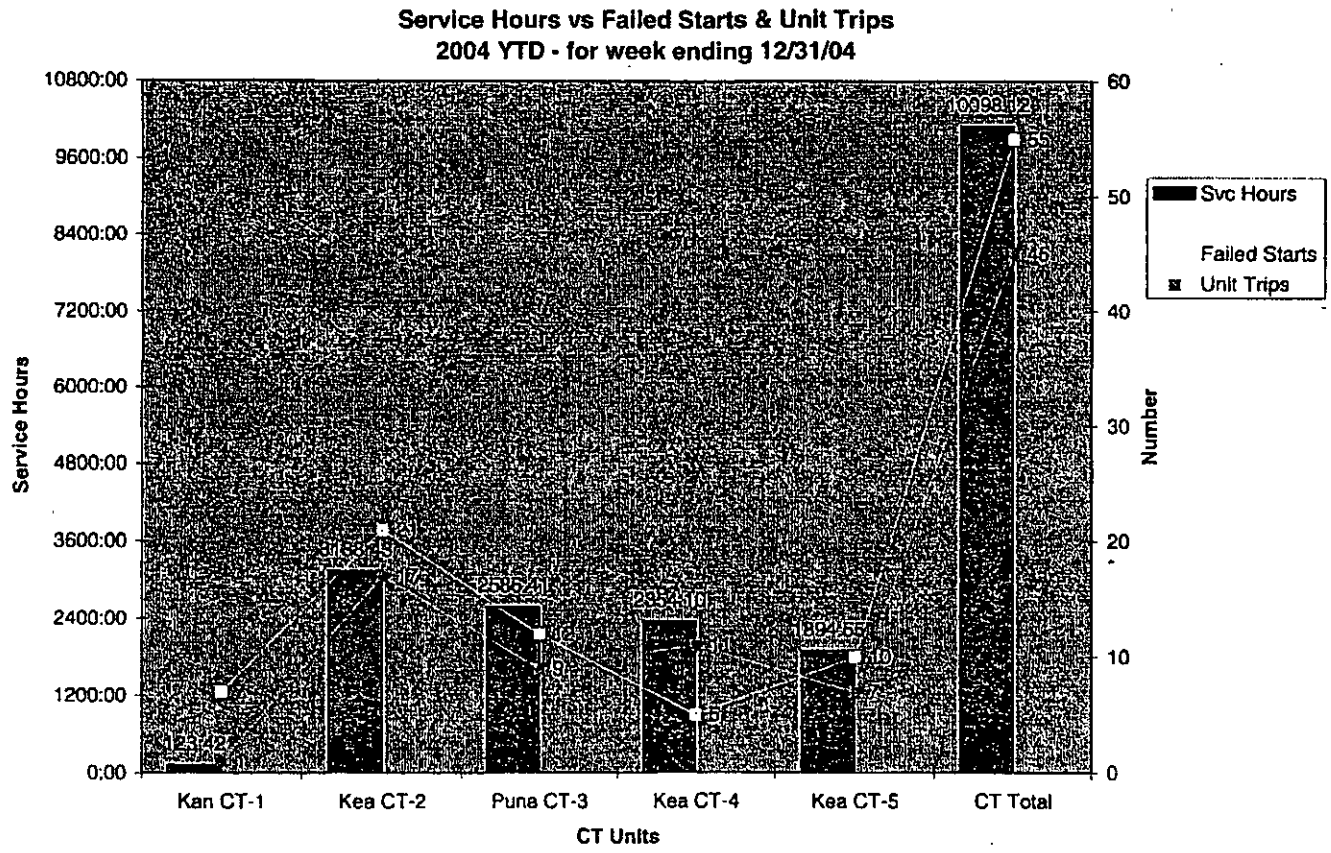
Service Hours vs Failed Starts & Unit Trips
2004 YTD - for week ending 12/31/04
Service Hours
10800:00
9600:00
8400:00
7200:00
6000:00
4800:00
3600:00
2400:00
1200:00
0:00
Number
60
50
40
30
20
10
0
Svc Hours
Failed Starts
Unit Trips
Kan CT-1
Kea CT-2
Puna CT-3
Kea CT-4
Kea CT-5
CT Total
CT Units

2004 YTD - For Week Ending 12/31/04		(a)	(b)	(c)	(d)	(b/d)
	net GWH	Svc Hours	Failed Starts	Unit Trips	Unit Starts	% Failed Starts
Hill No. 6	145	7670:07	0	3	24	0%
Hill No. 5	44	4061:51	0	2	7	0%
Puna Steam	71	6762:14	0	3	20	0%
Shp No. 3	3	724:57	0	1	88	0%
Shp No. 4	3	829:12	0	3	112	0%
Steam Total	267 gwh	20048:22	0	12	251	0%
Wma D-12		723:30	25	4	269	9%
Wma D-13		815:08	16	1	302	5%
Wma D-14		306:22	14	2	183	8%
Waimea Diesels	4	1845:02	55	7	754	7%
Kan D-11		7:29	1	0	6	17%
Kan D-15		105:06	6	7	80	8%
Kan D-16		88:06	1	0	66	2%
Kan D-17		272:17	7	3	136	5%
Kanoelehua Diesels	1	472:59	15	10	288	5%
Kea D-18		305:38	0	6	40	0%
Kea D-19		163:37	2	4	59	3%
Kea D-20		0:10	0	0	1	0%
Kea D-21		742:04	25	20	143	17%
Kea D-22		586:23	14	53	184	8%
Kea D-23		773:12	13	28	213	6%
Keahole Diesels	5	2571:06	54	111	640	8%
Panaewa D-24		33:43	4	1	72	6%
Outl D-25		45:58	1	0	76	1%
Punaluu D-26		39:20	1	3	71	1%
Kapua D-27		45:47	0	1	69	0%
Dispersed Generation	0	164:50	6	5	288	2%
Diesel Total	10 gwh	5053:57	130	133	1970	7%
Kan CT-1	1	123:42	7	1	44	16%
Kea CT-2	32	3138:43	21	17	269	8%
Puna CT-3	31	2586:41	12	9	279	4%
Kea CT-4	38	2354:10	5	11	181	3%
Kea CT-5	28	1894:55	10	7	152	7%
CT Total	130 gwh	10098:12	55	45	925	6%
Total System	407 gwh	35200:33	185	190	3146	6%

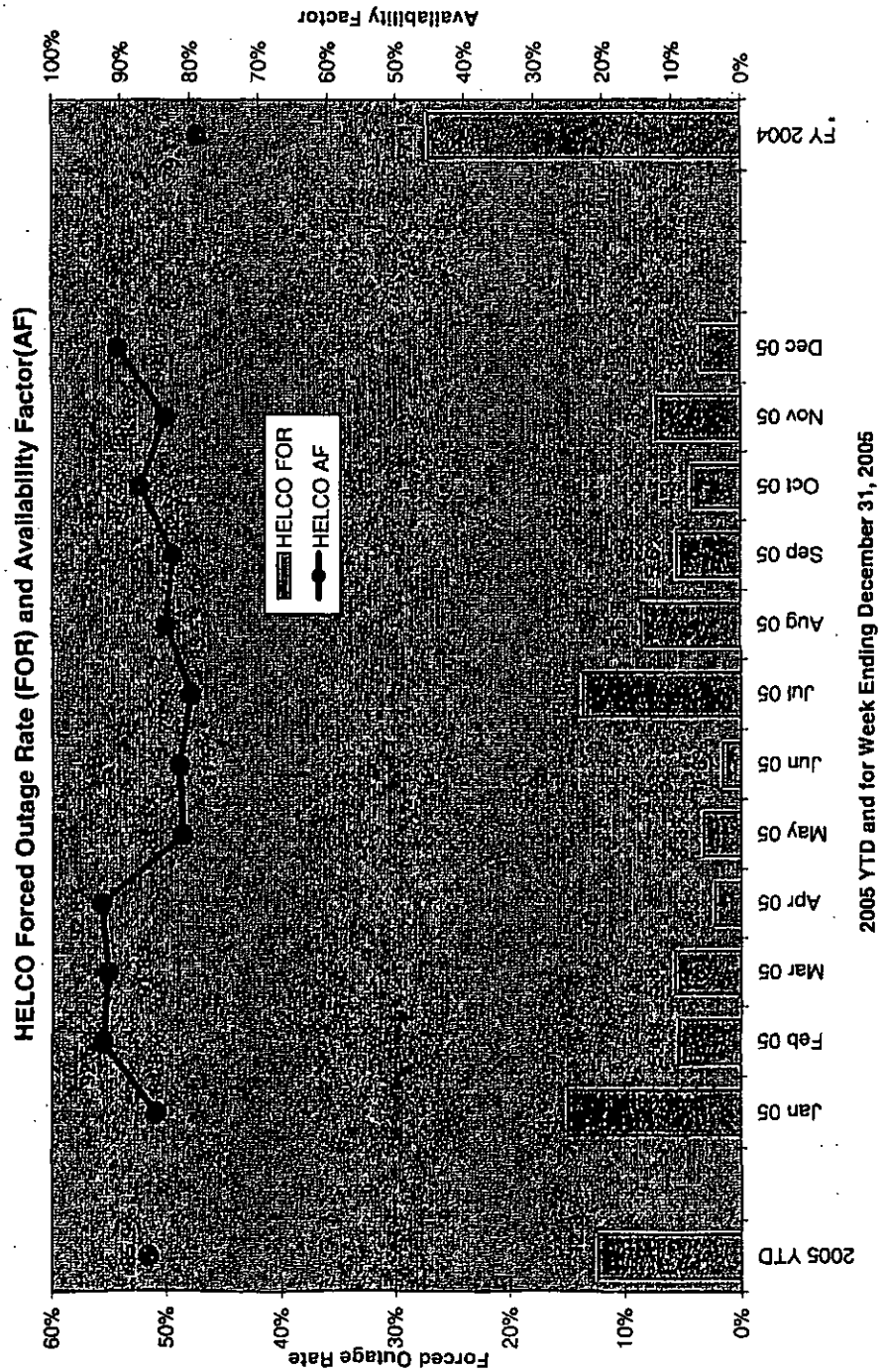
HELCO Forced Outage Rate (FOR) and Availability Factor(AF)
2005 YTD and for Week Ending December 31, 2005
Forced Outage Rate
Availability Factor
HELCO FOR
HELCO AF
60%
50%
40%
30%
20%
10%
0%
100%
90%
80%
70%
60%
50%
40%
30%
20%
10%
0%
2005 YTD
Jan 05
Feb 05
Mar 05
Apr 05
May 05
Jun 05
Jul 05
Aug 05
Sep 05
Oct 05
Nov 05
Dec 05
FY 2004

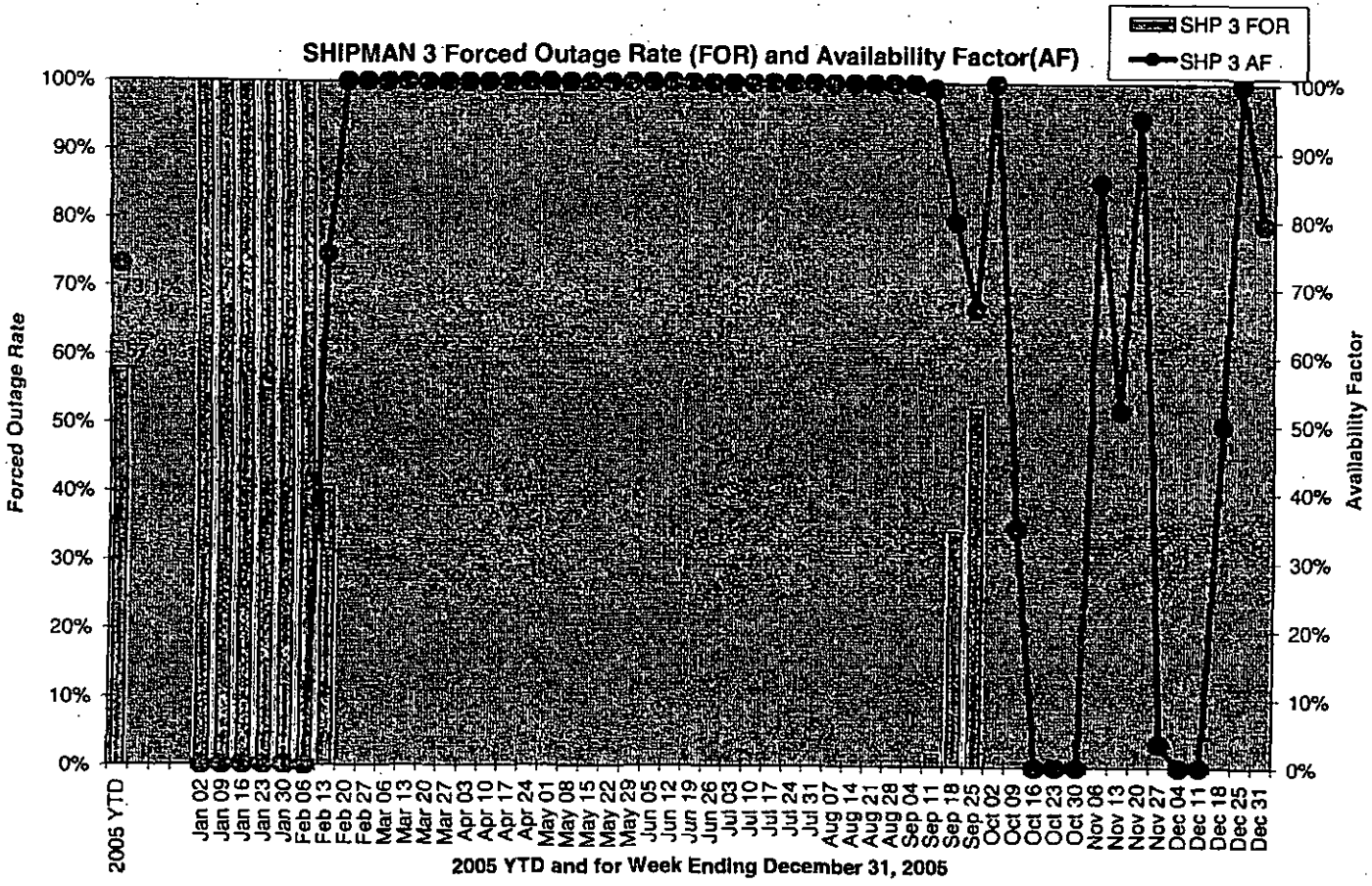
SHIPMAN 3 Forced Outage Rate (FOR) and Availability Factor(AF)
SHP 3 FOR
SHP 3 AF
Forced Outage Rate
Availability Factor
100%
90%
80%
70%
60%
50%
40%
30%
20%
10%
0%
2005 YTD
Jan 02
Jan 09
Jan 16
Jan 23
Jan 30
Feb 06
Feb 13
Feb 20
Feb 27
Mar 06
Mar 13
Mar 20
Mar 27
Apr 03
Apr 10
Apr 17
Apr 24
May 01
May 08
May 15
May 22
May 29
Jun 05
Jun 12
Jun 19
Jun 26
Jul 03
Jul 10
Jul 17
Jul 24
Jul 31
Aug 07
Aug 14
Aug 21
Aug 28
Sep 04
Sep 11
Sep 18
Sep 25
Oct 02
Oct 09
Oct 16
Oct 23
Oct 30
Nov 06
Nov 13
Nov 20
Nov 27
Dec 04
Dec 11
Dec 18
Dec 25
Dec 31
2005 YTD and for Week Ending December 31, 2005

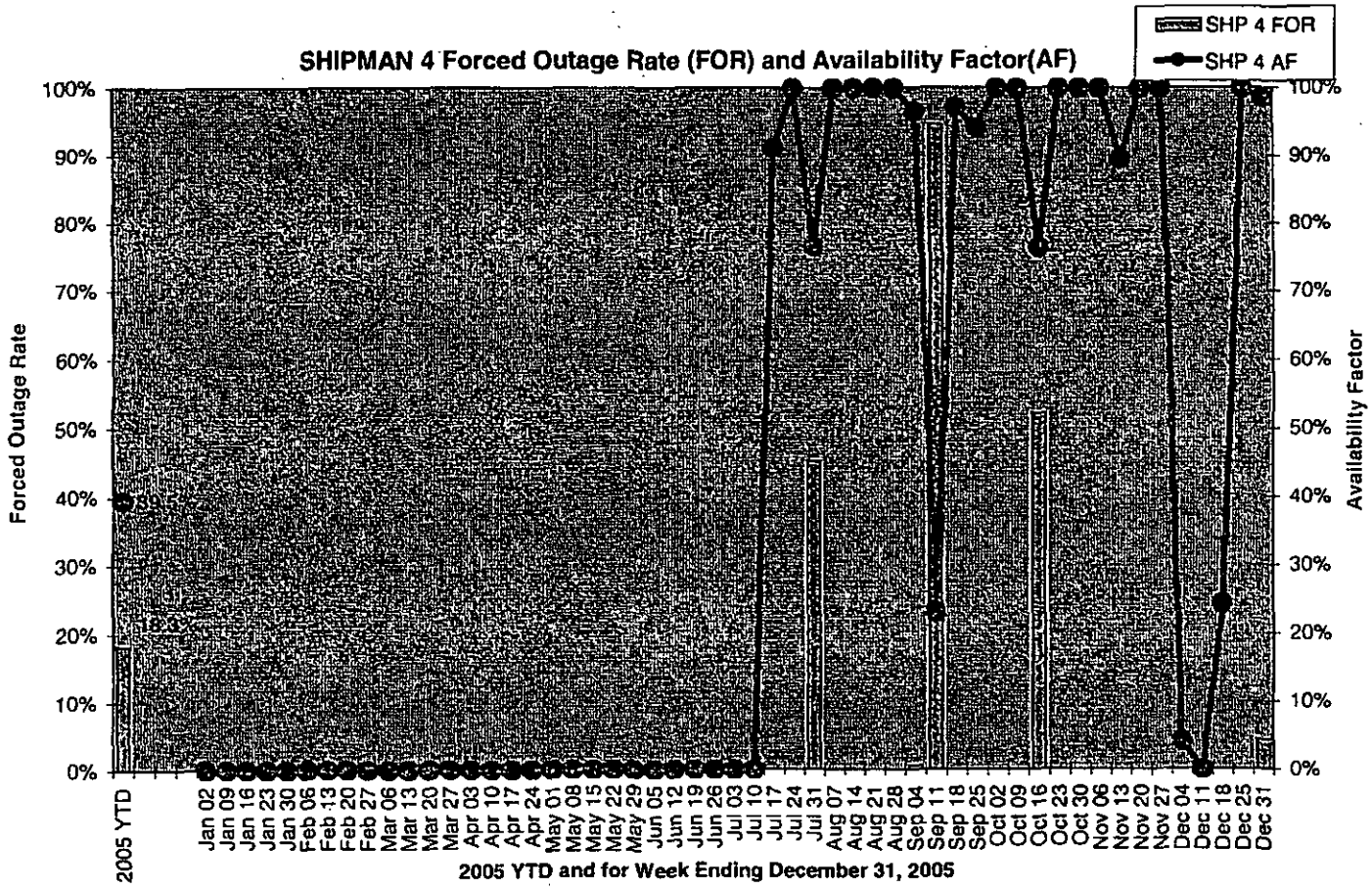
SHIPMAN 4 Forced Outage Rate (FOR) and Availability Factor(AF)
SHP 4 FOR
SHP 4 AF
Forced Outage Rate
Availability Factor
100%
90%
80%
70%
60%
50%
40%
30%
20%
10%
0%
39
18.3
2005 YTD
Jan 02
Jan 09
Jan 16
Jan 23
Jan 30
Feb 06
Feb 13
Feb 20
Feb 27
Mar 06
Mar 13
Mar 20
Mar 27
Apr 03
Apr 10
Apr 17
Apr 24
May 01
May 08
May 15
May 22
May 29
Jun 05
Jun 12
Jun 19
Jun 26
Jul 03
Jul 10
Jul 17
Jul 24
Jul 31
Aug 07
Aug 14
Aug 21
Aug 28
Sep 04
Sep 11
Sep 18
Sep 25
Oct 02
Oct 09
Oct 16
Oct 23
Oct 30
Nov 06
Nov 13
Nov 20
Nov 27
Dec 04
Dec 11
Dec 18
Dec 25
Dec 31
2005 YTD and for Week Ending December 31, 2005

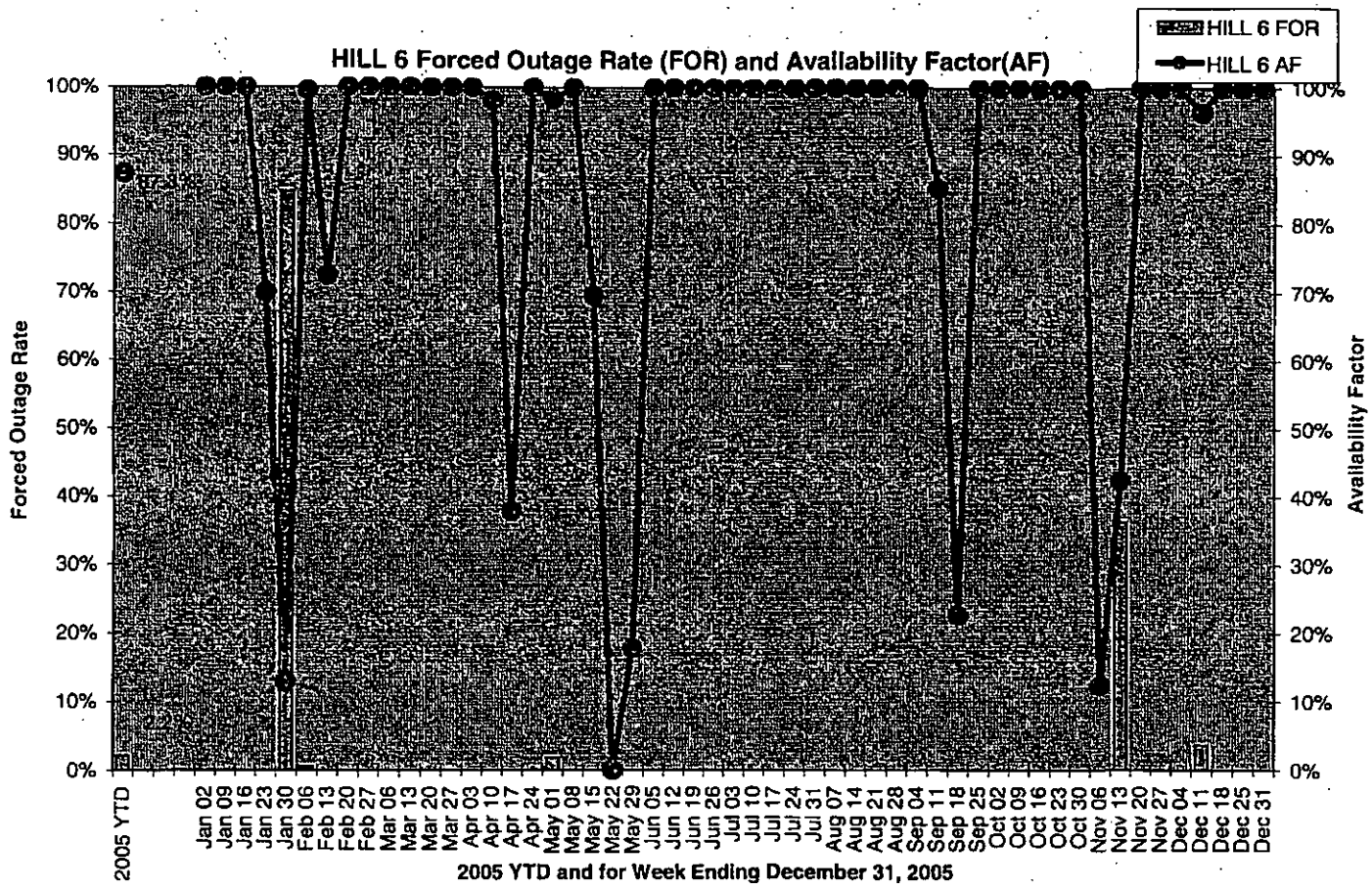
HILL 6 Forced Outage Rate (FOR) and Availability Factor(AF)
HILL 6 FOR
HILL 6 AF
Forced Outage Rate
Availability Factor
100%
90%
80%
70%
60%
50%
40%
30%
20%
10%
0%
2005 YTD
Jan 02
Jan 09
Jan 16
Jan 23
Jan 30
Feb 06
Feb 13
Feb 20
Feb 27
Mar 06
Mar 13
Mar 20
Mar 27
Apr 03
Apr 10
Apr 17
Apr 24
May 01
May 08
May 15
May 22
May 29
Jun 05
Jun 12
Jun 19
Jun 26
Jul 03
Jul 10
Jul 17
Jul 24
Jul 31
Aug 07
Aug 14
Aug 21
Aug 28
Sep 04
Sep 11
Sep 18
Sep 25
Oct 02
Oct 09
Oct 16
Oct 23
Oct 30
Nov 06
Nov 13
Nov 20
Nov 27
Dec 04
Dec 11
Dec 18
Dec 25
Dec 31
2005 YTD and for Week Ending December 31, 2005

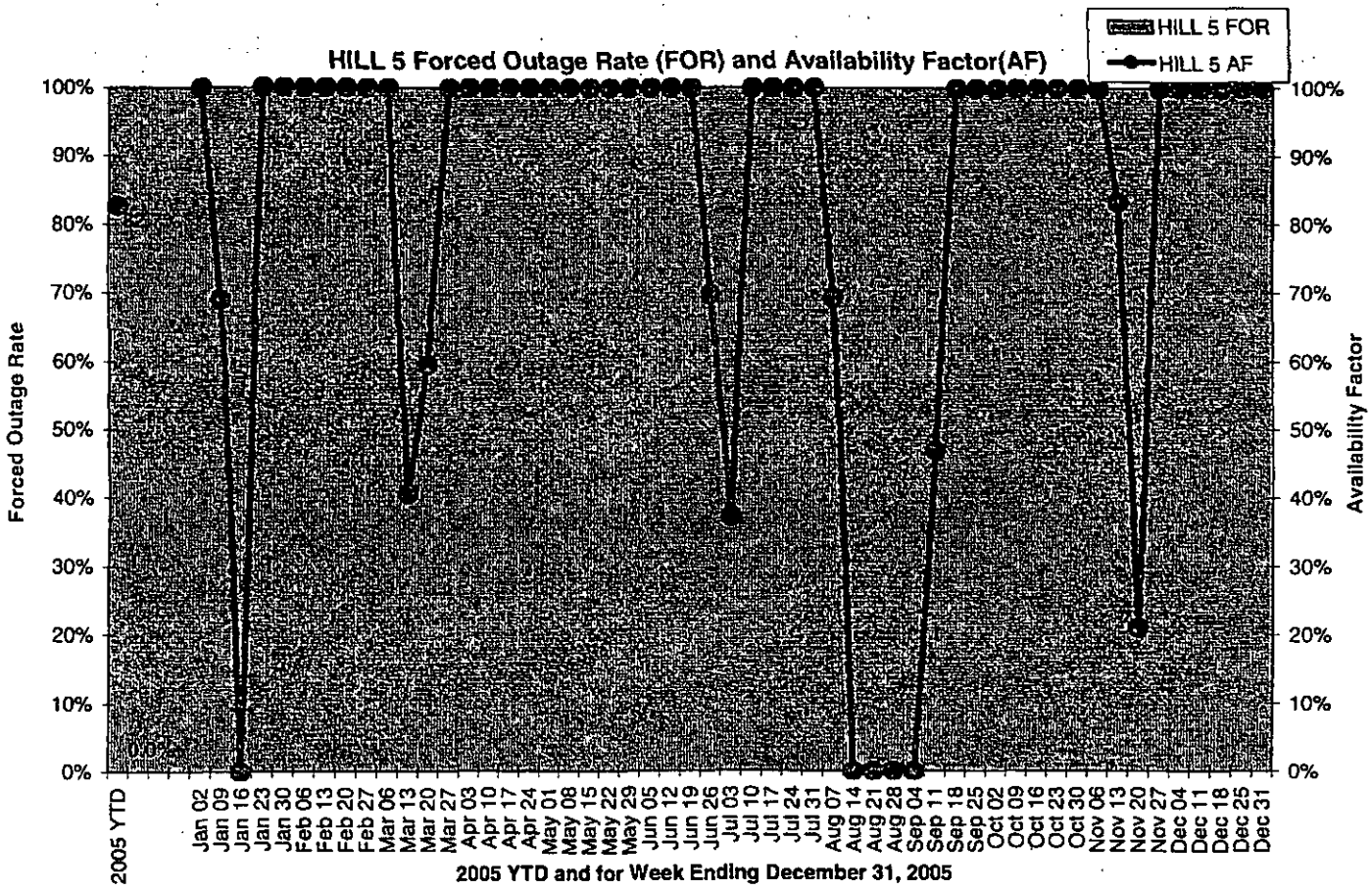
HILL 5 Forced Outage Rate (FOR) and Availability Factor(AF)
HILL 5 FOR
HILL 5 AF
Forced Outage Rate
Availability Factor
100%
90%
80%
70%
60%
50%
40%
30%
20%
10%
0%
2005 YTD
Jan 02
Jan 09
Jan 16
Jan 23
Jan 30
Feb 06
Feb 13
Feb 20
Feb 27
Mar 06
Mar 13
Mar 20
Mar 27
Apr 03
Apr 10
Apr 17
Apr 24
May 01
May 08
May 15
May 22
May 29
Jun 05
Jun 12
Jun 19
Jun 26
Jul 03
Jul 10
Jul 17
Jul 24
Jul 31
Aug 07
Aug 14
Aug 21
Aug 28
Sep 04
Sep 11
Sep 18
Sep 25
Oct 02
Oct 09
Oct 16
Oct 23
Oct 30
Nov 06
Nov 13
Nov 20
Nov 27
Dec 04
Dec 11
Dec 18
Dec 25
Dec 31
2005 YTD and for Week Ending December 31, 2005

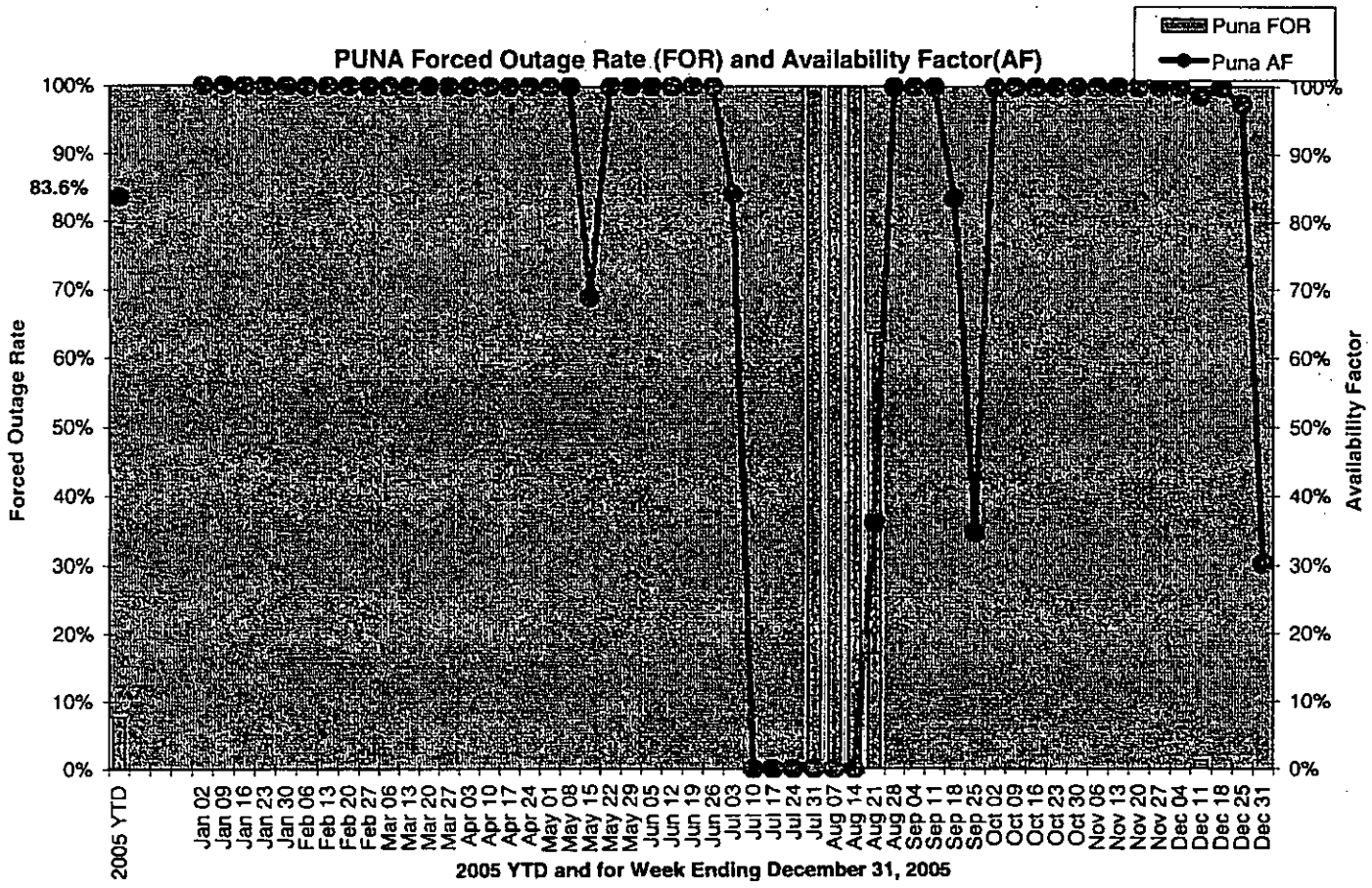
PUNA Forced Outage Rate (FOR) and Availability Factor(AF)
Puna FOR
Puna AF
Forced Outage Rate
Availability Factor
83.6%
100%
90%
80%
70%
60%
50%
40%
30%
20%
10%
0%
2005 YTD
Jan 02
Jan 09
Jan 16
Jan 23
Jan 30
Feb 06
Feb 13
Feb 20
Feb 27
Mar 06
Mar 13
Mar 20
Mar 27
Apr 03
Apr 10
Apr 17
Apr 24
May 01
May 08
May 15
May 22
May 29
Jun 05
Jun 12
Jun 19
Jun 26
Jul 03
Jul 10
Jul 17
Jul 24
Jul 31
Aug 07
Aug 14
Aug 21
Aug 28
Sep 04
Sep 11
Sep 18
Sep 25
Oct 02
Oct 09
Oct 16
Oct 23
Oct 30
Nov 06
Nov 13
Nov 20
Nov 27
Dec 04
Dec 11
Dec 18
Dec 25
Dec 31
2005 YTD and for Week Ending December 31, 2005

DATA

Week #			week1	week2	week3	week4	week5	week6	week7	week8	week9	week10	week11	week12	week13	week14	week15	week16	week17	week18
For Week Ending and Year-to date		2005 YTD	Jan 02	Jan 09	Jan 16	Jan 23	Jan 30	Feb 06	Feb 13	Feb 20	Feb 27	Mar 06	Mar 13	Mar 20	Mar 27	Apr 03	Apr 10	Apr 17	Apr 24	May 01
Shp 3 Weekly FOR	SHP 3 FOR	57.9%	100.0%	100.0%	100.0%	100.0%	100.0%	100.0%	40.9%	0.0%	0.0%	0.0%	0.0%	0.0%	0.0%	0.0%	0.0%	0.0%	0.0%	0.0%
Shp 3 Year To Date FOR			100.0%	100.0%	100.0%	100.0%	100.0%	100.0%	93.8%	85.5%	83.4%	83.4%	83.0%	83.0%	83.0%	83.0%	83.0%	83.0%	83.0%	83.0%
Shp 3 Weekly AF	SHP 3 AF	73.1%	0.0%	0.0%	0.0%	0.0%	0.0%	0.0%	74.7%	100.0%	100.0%	100.0%	100.0%	100.0%	100.0%	100.0%	100.0%	100.0%	100.0%	100.0%
Shp 3 Year To Date AF			0.0%	0.0%	0.0%	0.0%	0.0%	0.0%	11.9%	24.0%	33.2%	40.4%	46.1%	50.9%	54.9%	58.3%	61.2%	63.8%	66.0%	68.0%
Shp 4 Weekly FOR	SHP 4 FOR	18.3%	0.0%	0.0%	0.0%	0.0%	0.0%	0.0%	0.0%	0.0%	0.0%	0.0%	0.0%	0.0%	0.0%	0.0%	0.0%	0.0%	0.0%	0.0%
Shp 4 Year To Date FOR			0.0%	0.0%	0.0%	0.0%	0.0%	0.0%	0.0%	0.0%	0.0%	0.0%	0.0%	0.0%	0.0%	0.0%	0.0%	0.0%	0.0%	0.0%
Shp 4 Weekly AF	SHP 4 AF	39.5%	0.0%	0.0%	0.0%	0.0%	0.0%	0.0%	0.0%	0.0%	0.0%	0.0%	0.0%	0.0%	0.0%	0.0%	0.0%	0.0%	0.0%	0.0%
Shp 4 Year To Date AF			0.0%	0.0%	0.0%	0.0%	0.0%	0.0%	0.0%	0.0%	0.0%	0.0%	0.0%	0.0%	0.0%	0.0%	0.0%	0.0%	0.0%	0.0%
Hill 6 Weekly FOR	HILL 6 FOR	2.2%	0.0%	0.0%	0.0%	0.0%	84.7%	0.5%	0.0%	0.0%	0.0%	0.0%	0.0%	0.0%	0.0%	0.0%	0.0%	0.0%	0.0%	1.8%
Hill 6 Year To Date FOR			0.0%	0.0%	0.0%	0.0%	18.7%	14.9%	13.0%	11.0%	9.5%	8.4%	7.5%	6.8%	6.2%	5.7%	5.3%	5.2%	4.8%	4.6%
Hill 6 Weekly AF	HILL 6 AF	87.3%	100.0%	100.0%	100.0%	69.9%	12.9%	99.5%	72.5%	100.0%	100.0%	100.0%	100.0%	100.0%	100.0%	100.0%	98.1%	37.9%	100.0%	98.2%
Hill 6 Year To Date AF			100.0%	100.0%	100.0%	90.9%	72.7%	77.7%	76.9%	80.1%	82.5%	84.4%	85.9%	87.1%	88.2%	89.1%	89.7%	86.3%	87.2%	87.8%
Hill 5 Weekly FOR	HILL 5 FOR	0.0%	0.0%	0.0%	0.0%	0.0%	0.0%	0.0%	0.0%	0.0%	0.0%	0.0%	0.0%	0.0%	0.0%	0.0%	0.0%	0.0%	0.0%	0.0%
Hill 5 Year To Date FOR			0.0%	0.0%	0.0%	0.0%	0.0%	0.0%	0.0%	0.0%	0.0%	0.0%	0.0%	0.0%	0.0%	0.0%	0.0%	0.0%	0.0%	0.0%
Hill 5 Weekly AF	HILL 5 AF	82.7%	100.0%	68.9%	0.0%	100.0%	100.0%	100.0%	100.0%	100.0%	100.0%	100.0%	40.6%	59.5%	100.0%	100.0%	100.0%	100.0%	100.0%	100.0%
Hill 5 Year To Date AF			100.0%	75.8%	42.6%	60.1%	69.4%	75.2%	79.1%	82.0%	84.2%	85.9%	81.5%	79.5%	81.2%	82.6%	83.8%	84.9%	85.8%	86.6%
Puna Weekly FOR	Puna FOR	7.7%	0.0%	0.0%	0.0%	0.0%	0.0%	0.0%	0.0%	0.0%	0.0%	0.0%	0.0%	0.0%	0.0%	0.0%	0.0%	0.0%	0.0%	0.0%
Puna Year To Date FOR			0.0%	0.0%	0.0%	0.0%	0.0%	0.0%	0.0%	0.0%	0.0%	0.0%	0.0%	0.0%	0.0%	0.0%	0.0%	0.0%	0.0%	0.0%
Puna Weekly AF	Puna AF	83.6%	100.0%	100.0%	100.0%	100.0%	100.0%	100.0%	100.0%	100.0%	100.0%	100.0%	100.0%	100.0%	100.0%	100.0%	100.0%	100.0%	100.0%	100.0%
Puna Year To Date AF			100.0%	100.0%	100.0%	100.0%	100.0%	100.0%	100.0%	100.0%	100.0%	100.0%	100.0%	100.0%	100.0%	100.0%	100.0%	100.0%	100.0%	100.0%

DATA

Week #			week19	week20	week21	week22	week23	week24	week25	week26	week27	week28	week29	week30	week31	week32	week33	week34	week35	week36	week37
For Week Ending and Year-to date		2005 YTD	May 08	May 15	May 22	May 29	Jun 05	Jun 12	Jun 19	Jun 26	Jul 03	Jul 10	Jul 17	Jul 24	Jul 31	Aug 07	Aug 14	Aug 21	Aug 28	Sep 04	Sep 11
Shp 3 Weekly FOR	SHP 3 FOR	57.9%	0.0%	0.0%	0.0%	0.0%	0.0%	0.0%	0.0%	0.0%	0.0%	0.0%	0.0%	0.0%	0.0%	0.0%	0.0%	0.0%	0.0%	0.0%	1.9%
Shp 3 Year To Date FOR			83.0%	83.0%	83.0%	83.0%	83.0%	83.0%	83.0%	83.0%	83.0%	83.0%	83.0%	83.0%	83.0%	83.0%	83.0%	83.0%	83.0%	78.6%	74.4%
Shp 3 Weekly AF	SHP 3 AF	73.1%	100.0%	100.0%	100.0%	100.0%	100.0%	100.0%	100.0%	100.0%	100.0%	100.0%	100.0%	100.0%	100.0%	100.0%	100.0%	100.0%	100.0%	100.0%	99.2%
Shp 3 Year To Date AF			69.7%	71.3%	72.7%	74.0%	75.1%	76.2%	77.2%	78.1%	78.9%	79.7%	80.4%	81.1%	81.7%	82.3%	82.8%	83.4%	83.8%	84.3%	84.7%
Shp 4 Weekly FOR	SHP 4 FOR	18.3%	0.0%	0.0%	0.0%	0.0%	0.0%	0.0%	0.0%	0.0%	0.0%	0.0%	0.0%	0.0%	45.3%	0.0%	0.0%	0.0%	0.0%	0.6%	94.6%
Shp 4 Year To Date FOR			0.0%	0.0%	0.0%	0.0%	0.0%	0.0%	0.0%	0.0%	0.0%	0.0%	0.0%	0.0%	32.8%	32.8%	32.8%	32.8%	32.8%	21.9%	53.2%
Shp 4 Weekly AF	SHP 4 AF	39.5%	0.0%	0.0%	0.0%	0.0%	0.0%	0.0%	0.0%	0.0%	0.0%	0.0%	91.2%	100.0%	76.6%	100.0%	100.0%	100.0%	100.0%	96.6%	23.2%
Shp 4 Year To Date AF			0.0%	0.0%	0.0%	0.0%	0.0%	0.0%	0.0%	0.0%	0.0%	0.0%	3.2%	6.5%	8.8%	11.8%	14.5%	17.1%	19.5%	21.7%	21.7%
Hill 6 Weekly FOR	HILL 6 FOR	2.2%	0.0%	0.0%	0.0%	0.0%	0.0%	0.0%	0.0%	0.0%	0.0%	0.0%	0.0%	0.0%	0.0%	0.0%	0.0%	0.0%	0.0%	0.0%	0.0%
Hill 6 Year To Date FOR			4.4%	4.2%	4.2%	4.1%	3.9%	3.7%	3.5%	3.4%	3.2%	3.1%	3.0%	2.9%	2.7%	2.7%	2.6%	2.5%	2.4%	2.3%	2.3%
Hill 6 Weekly AF	HILL 6 AF	87.3%	100.0%	69.6%	0.0%	17.9%	100.0%	100.0%	100.0%	100.0%	100.0%	100.0%	100.0%	100.0%	100.0%	100.0%	100.0%	100.0%	100.0%	100.0%	85.3%
Hill 6 Year To Date AF			88.5%	87.5%	83.2%	80.1%	81.0%	81.8%	82.6%	83.2%	83.9%	84.5%	85.0%	85.5%	86.0%	86.5%	86.9%	87.3%	87.6%	88.0%	87.9%
Hill 5 Weekly FOR	HILL 5 FOR	0.0%	0.0%	0.0%	0.0%	0.0%	0.0%	0.0%	0.0%	0.0%	0.0%	0.0%	0.0%	0.0%	0.0%	0.0%	0.0%	0.0%	0.0%	0.0%	0.0%
Hill 5 Year To Date FOR			0.0%	0.0%	0.0%	0.0%	0.0%	0.0%	0.0%	0.0%	0.0%	0.0%	0.0%	0.0%	0.0%	0.0%	0.0%	0.0%	0.0%	0.0%	0.0%
Hill 5 Weekly AF	HILL 5 AF	82.7%	100.0%	100.0%	100.0%	100.0%	100.0%	100.0%	100.0%	69.7%	37.3%	100.0%	100.0%	100.0%	100.0%	69.4%	0.0%	0.0%	0.0%	0.0%	46.9%
Hill 5 Year To Date AF			87.4%	88.0%	88.6%	89.1%	89.6%	90.1%	90.5%	89.7%	87.7%	88.1%	88.5%	88.9%	89.3%	88.7%	85.9%	83.3%	80.9%	78.6%	77.7%
Puna Weekly FOR	Puna FOR	7.7%	0.0%	0.0%	0.0%	0.0%	0.0%	0.0%	0.0%	0.0%	0.0%	0.0%	0.0%	0.0%	100.0%	100.0%	100.0%	63.7%	0.0%	0.0%	0.0%
Puna Year To Date FOR			0.0%	0.0%	0.0%	0.0%	0.0%	0.0%	0.0%	0.0%	0.0%	0.0%	0.0%	0.0%	3.7%	7.2%	10.4%	12.2%	11.8%	11.4%	11.1%
Puna Weekly AF	Puna AF	83.6%	100.0%	69.0%	100.0%	100.0%	100.0%	100.0%	100.0%	100.0%	84.2%	0.0%	0.0%	0.0%	0.0%	0.0%	0.0%	36.3%	100.0%	100.0%	100.0%
Puna Year To Date AF			100.0%	98.4%	98.5%	98.5%	98.6%	98.7%	98.7%	98.8%	98.2%	94.6%	91.3%	88.2%	85.2%	82.5%	80.0%	78.7%	79.3%	79.9%	80.4%

DATA

Week #			week38	week39	week40	week41	week42	week43	week44	week45	week46	week47	week48	week49	week50	week51	week52	week53
For Week Ending and Year-to date		2005 YTD	Sep 18	Sep 25	Oct 02	Oct 09	Oct 16	Oct 23	Oct 30	Nov 06	Nov 13	Nov 20	Nov 27	Dec 04	Dec 11	Dec 18	Dec 25	Dec 31
Shp 3 Weekly FOR	SHP 3 FOR	57.9%	34.3%	52.4%	0.0%	0.0%	0.0%	0.0%	0.0%	0.0%	0.0%	0.0%	0.0%	0.0%	0.0%	0.0%	0.0%	0.0%
Shp 3 Year To Date FOR			71.6%	70.2%	67.4%	67.4%	67.4%	67.4%	67.4%	65.2%	63.1%	60.9%	60.9%	60.9%	60.9%	60.2%	58.6%	57.9%
Shp 3 Weekly AF	SHP 3 AF	73.1%	79.8%	67.0%	100.0%	34.6%	0.0%	0.0%	0.0%	85.7%	52.1%	95.0%	3.6%	0.0%	0.0%	50.0%	100.0%	79.5%
Shp 3 Year To Date AF			84.6%	84.1%	84.5%	83.3%	81.3%	79.4%	77.5%	77.7%	77.1%	77.5%	76.0%	74.4%	72.9%	72.4%	73.0%	73.1%
Shp 4 Weekly FOR	SHP 4 FOR	18.3%	0.0%	0.0%	0.0%	0.0%	52.2%	0.0%	0.0%	0.0%	0.0%	0.0%	0.0%	0.0%	0.0%	0.0%	0.0%	4.3%
Shp 4 Year To Date FOR			43.2%	37.1%	35.7%	31.0%	33.6%	29.4%	26.2%	23.9%	21.9%	20.7%	19.5%	19.8%	19.8%	19.4%	18.6%	18.3%
Shp 4 Weekly AF	SHP 4 AF	39.5%	97.3%	94.2%	100.0%	100.0%	78.5%	100.0%	100.0%	100.0%	89.6%	100.0%	100.0%	4.2%	0.0%	24.4%	100.0%	98.6%
Shp 4 Year To Date AF			23.7%	25.6%	27.5%	29.3%	30.4%	32.1%	33.6%	35.1%	36.3%	37.7%	39.0%	38.3%	37.5%	37.3%	38.5%	39.5%
Hill 6 Weekly FOR	HILL 6 FOR	2.2%	0.0%	0.0%	0.0%	0.0%	0.0%	0.0%	0.0%	0.0%	36.5%	0.0%	0.0%	0.0%	3.6%	0.0%	0.0%	0.0%
Hill 6 Year To Date FOR			2.2%	2.2%	2.1%	2.1%	2.0%	1.9%	1.9%	1.9%	2.5%	2.4%	2.4%	2.3%	2.3%	2.3%	2.2%	2.2%
Hill 6 Weekly AF	HILL 6 AF	87.3%	22.7%	100.0%	100.0%	100.0%	100.0%	100.0%	100.0%	12.5%	42.5%	100.0%	100.0%	100.0%	96.4%	100.0%	100.0%	100.0%
Hill 6 Year To Date AF			86.2%	86.5%	86.9%	87.2%	87.5%	87.8%	88.1%	86.4%	85.4%	85.7%	86.0%	86.3%	86.5%	86.8%	87.1%	87.3%
Hill 5 Weekly FOR	HILL 5 FOR	0.0%	0.0%	0.0%	0.0%	0.0%	0.0%	0.0%	0.0%	0.0%	0.0%	0.0%	0.0%	0.0%	0.0%	0.0%	0.0%	0.0%
Hill 5 Year To Date FOR			0.0%	0.0%	0.0%	0.0%	0.0%	0.0%	0.0%	0.0%	0.0%	0.0%	0.0%	0.0%	0.0%	0.0%	0.0%	0.0%
Hill 5 Weekly AF	HILL 5 AF	82.7%	100.0%	100.0%	100.0%	100.0%	100.0%	100.0%	100.0%	100.0%	83.4%	21.1%	100.0%	100.0%	100.0%	100.0%	100.0%	100.0%
Hill 5 Year To Date AF			78.3%	78.9%	79.4%	80.0%	80.4%	80.9%	81.3%	81.6%	81.8%	80.5%	80.9%	81.3%	81.7%	82.0%	82.4%	82.7%
Puna Weekly FOR	Puna FOR	7.7%	0.0%	0.0%	0.0%	0.0%	0.0%	0.0%	0.0%	0.0%	0.0%	0.0%	0.0%	0.0%	1.2%	0.0%	0.0%	0.0%
Puna Year To Date FOR			10.8%	10.7%	10.4%	10.1%	9.8%	9.6%	9.3%	9.1%	8.9%	8.7%	8.5%	8.3%	8.1%	7.9%	7.8%	7.7%
Puna Weekly AF	Puna AF	83.6%	83.6%	34.6%	100.0%	100.0%	100.0%	100.0%	100.0%	100.0%	100.0%	100.0%	100.0%	100.0%	98.8%	100.0%	97.6%	30.3%
Puna Year To Date AF			80.5%	79.3%	79.8%	80.3%	80.8%	81.3%	81.7%	82.1%	82.5%	82.9%	83.2%	83.6%	83.9%	84.2%	84.5%	83.6%

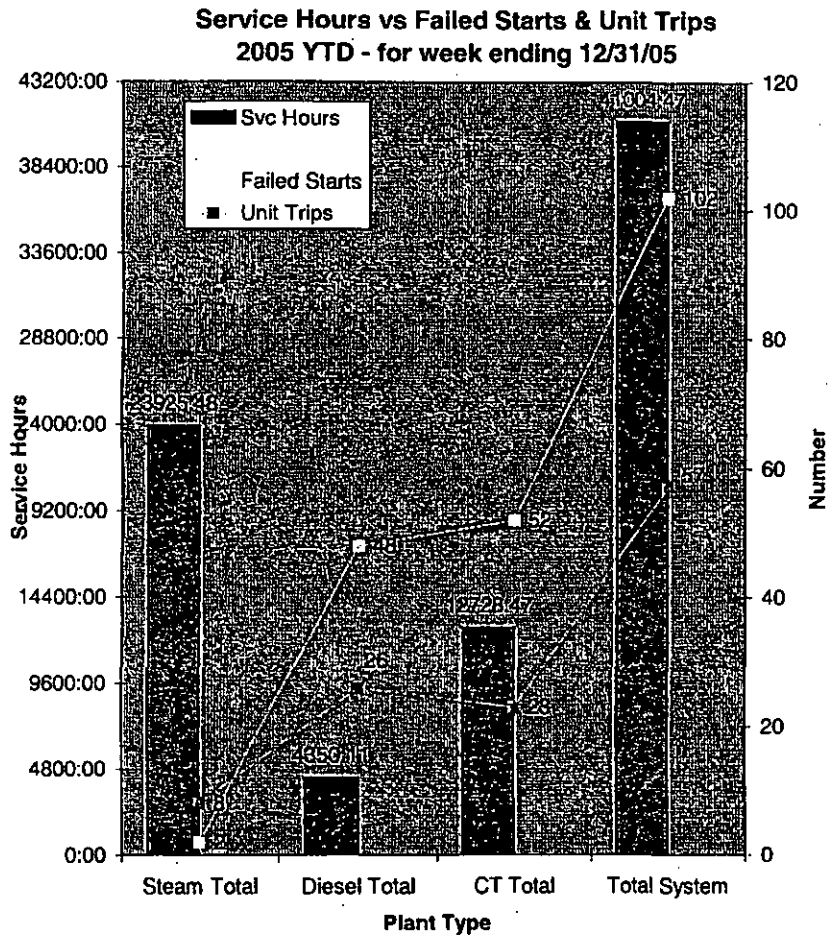
Service Hours vs Failed Starts & Unit Trips
2005 YTD - for week ending 12/31/05
Svc Hours
Failed Starts
Unit Trips
Service Hours
Number
43200:00
38400:00
33600:00
28800:00
24000:00
19200:00
14400:00
9600:00
4800:00
0:00
120
100
80
60
40
20
0
Steam Total
Diesel Total
CT Total
Total System
Plant Type

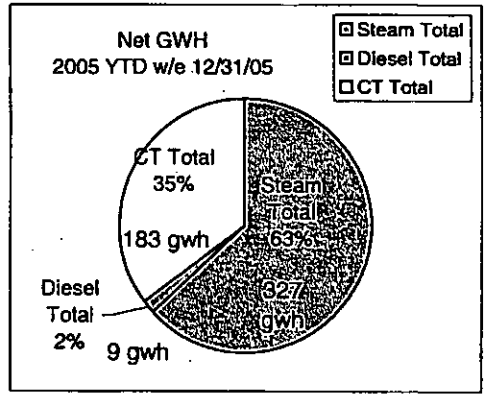
Net GWH
2005 YTD w/e 12/31/05
Steam Total
Diesel Total
CT Total
CT Total
35%
183 gwh
Steam
Total
63%
327
gwh
Diesel
Total
2%
9 gwh

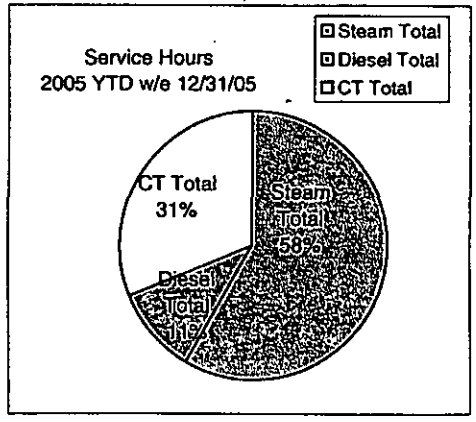
Service Hours
2005 YTD w/e 12/31/05
Steam Total
Diesel Total
CT Total
CT Total
31%
Steam
Total
58%
Diesel
Total
11%

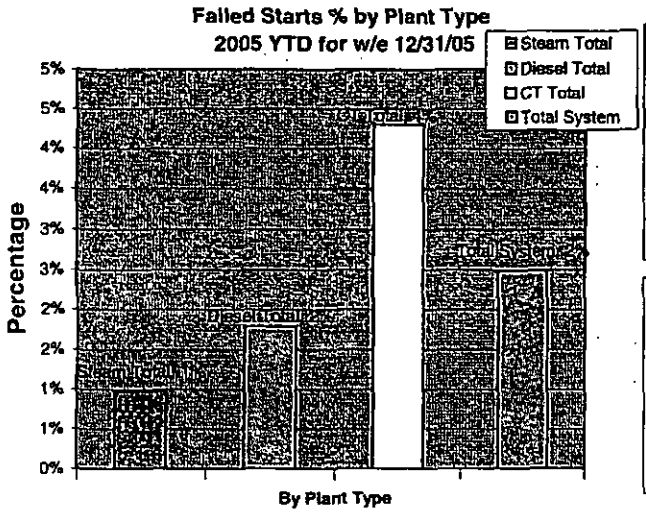
Failed Starts % by Plant Type
2005 YTD for w/e 12/31/05
Steam Total
Diesel Total
CT Total
Total System
Percentage
5%
5%
4%
4%
3%
3%
2%
2%
1%
1%
0%
By Plant Type

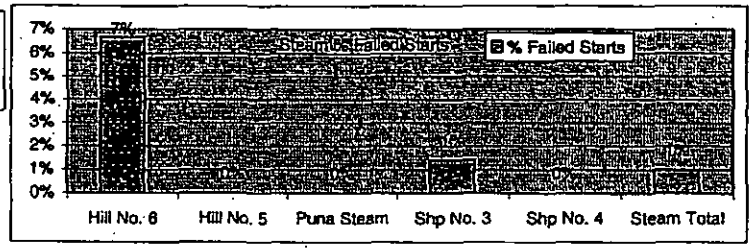
% Failed Starts
7%
6%
5%
4%
3%
2%
1%
0%
Hill No. 6
Hill No. 5
Puna Steam
Shp No. 3
Shp No. 4
Steam Total

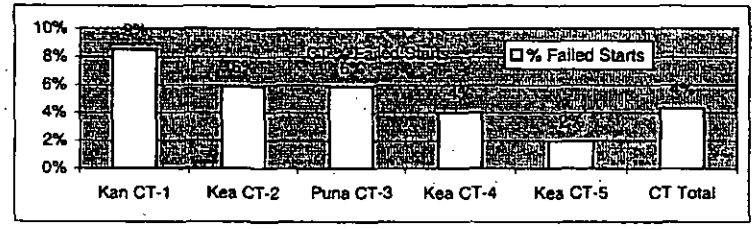
% Failed Starts
10%
8%
6%
4%
2%
0%
Kan CT-1
Kea CT-2
Puna CT-3
Kea CT-4
Kea CT-5
CT Total

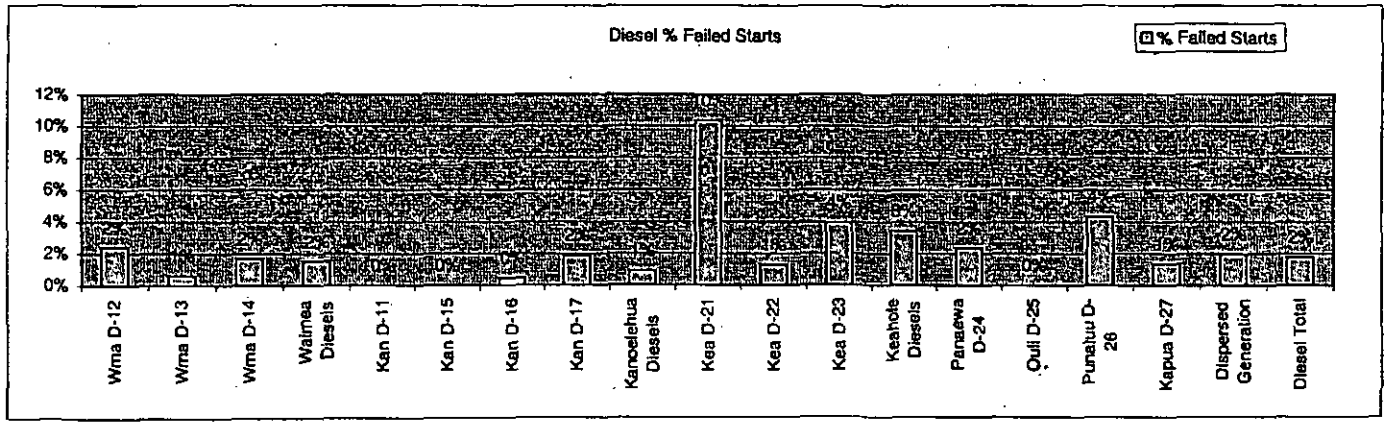
Diesel % Failed Starts
% Failed Starts
12%
10%
8%
6%
4%
2%
0%
Wma D-12
Wma D-13
Wma D-14
Waimea Diesels
Kan D-11
Kan D-15
Kan D-16
Kan D-17
Kanoelehua Diesels
Kea D-21
Kea D-22
Kea D-23
Keahole Diesels
Panaewa D-24
Puli D-25
Punaluu D-26
Kapua D-27
Dispersed Generation
Diesel Total

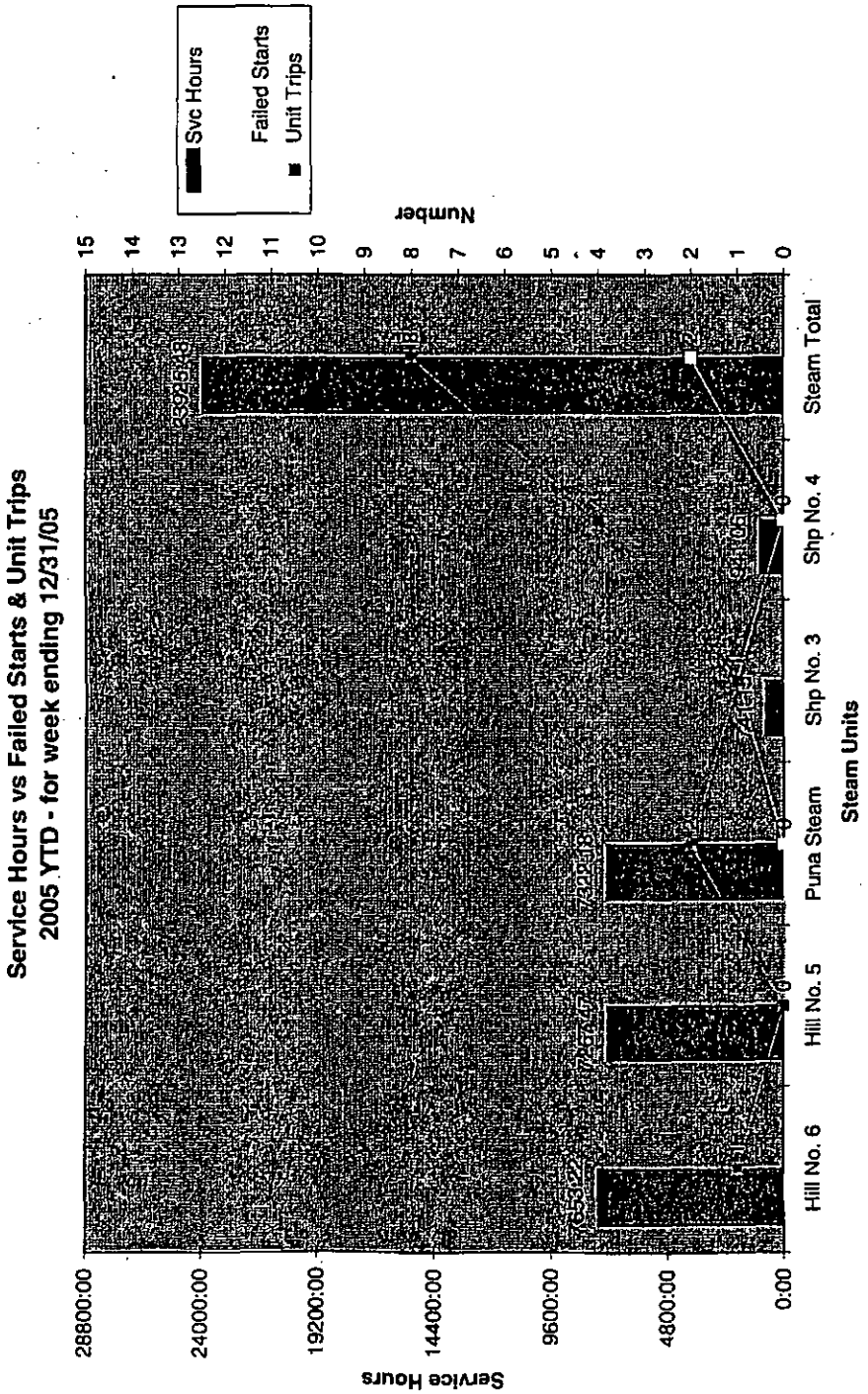
Service Hours vs Failed Starts & Unit Trips
2005 YTD - for week ending 12/31/05
Svc Hours
Failed Starts
Unit Trips
Number
Service Hours
28800:00
24000:00
19200:00
14400:00
9600:00
4800:00
0:00
15
14
13
12
11
10
9
8
7
6
5
4
3
2
1
0
Hill No. 6
Hill No. 5
Puna Steam
Shp No. 3
Shp No. 4
Steam Total
Steam Units

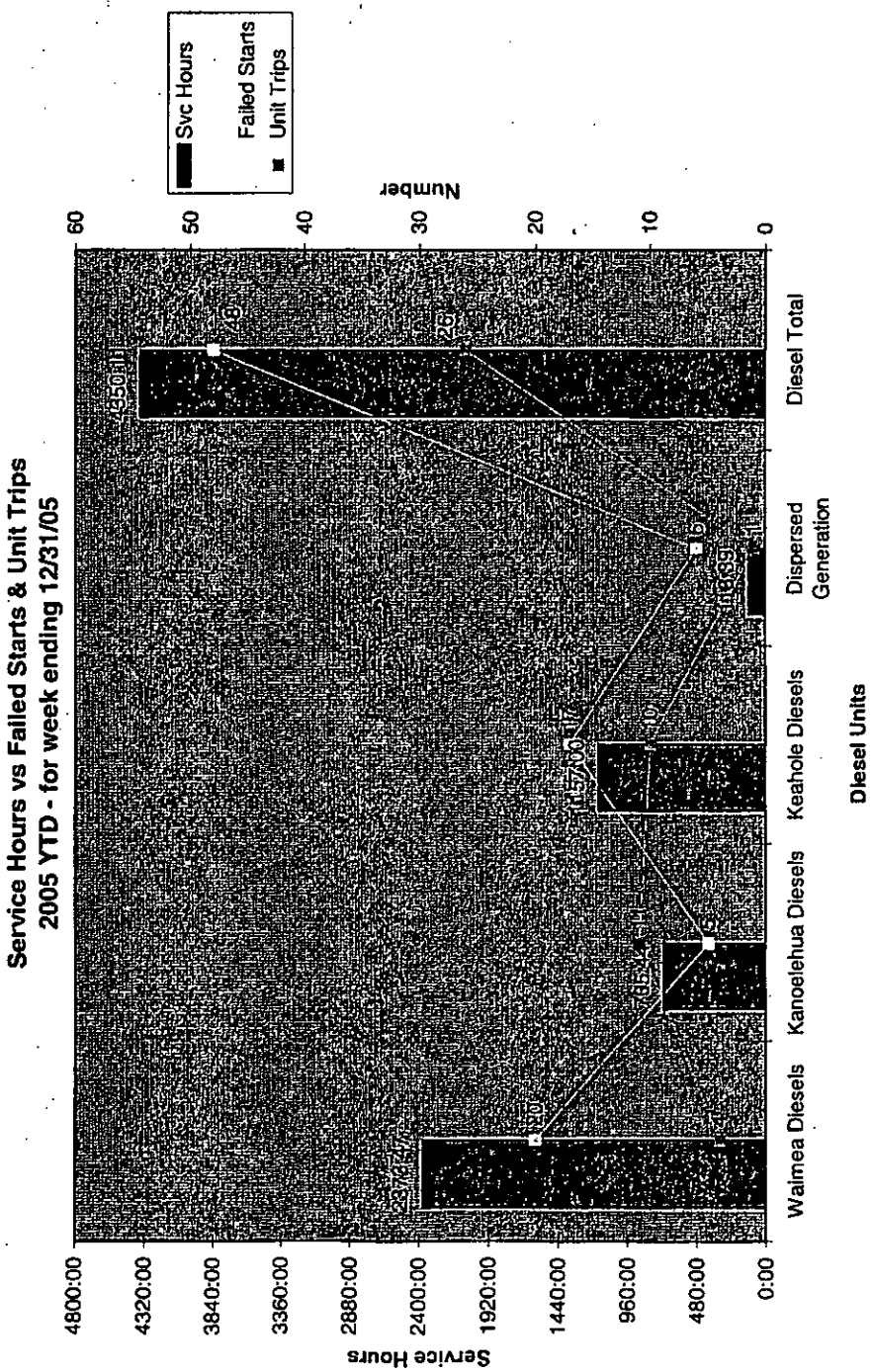
Service Hours vs Failed Starts & Unit Trips
2005 YTD - for week ending 12/31/05
Svc Hours
Failed Starts
Unit Trips
Number
Service Hours
4800:00
4320:00
3840:00
3360:00
2880:00
2400:00
1920:00
1440:00
960:00
480:00
0:00
60
50
40
30
20
10
0
Waimea Diesels
Kanoelehua Diesels
Keahole Diesels
Dispersed Generation
Diesel Total
Diesel Units

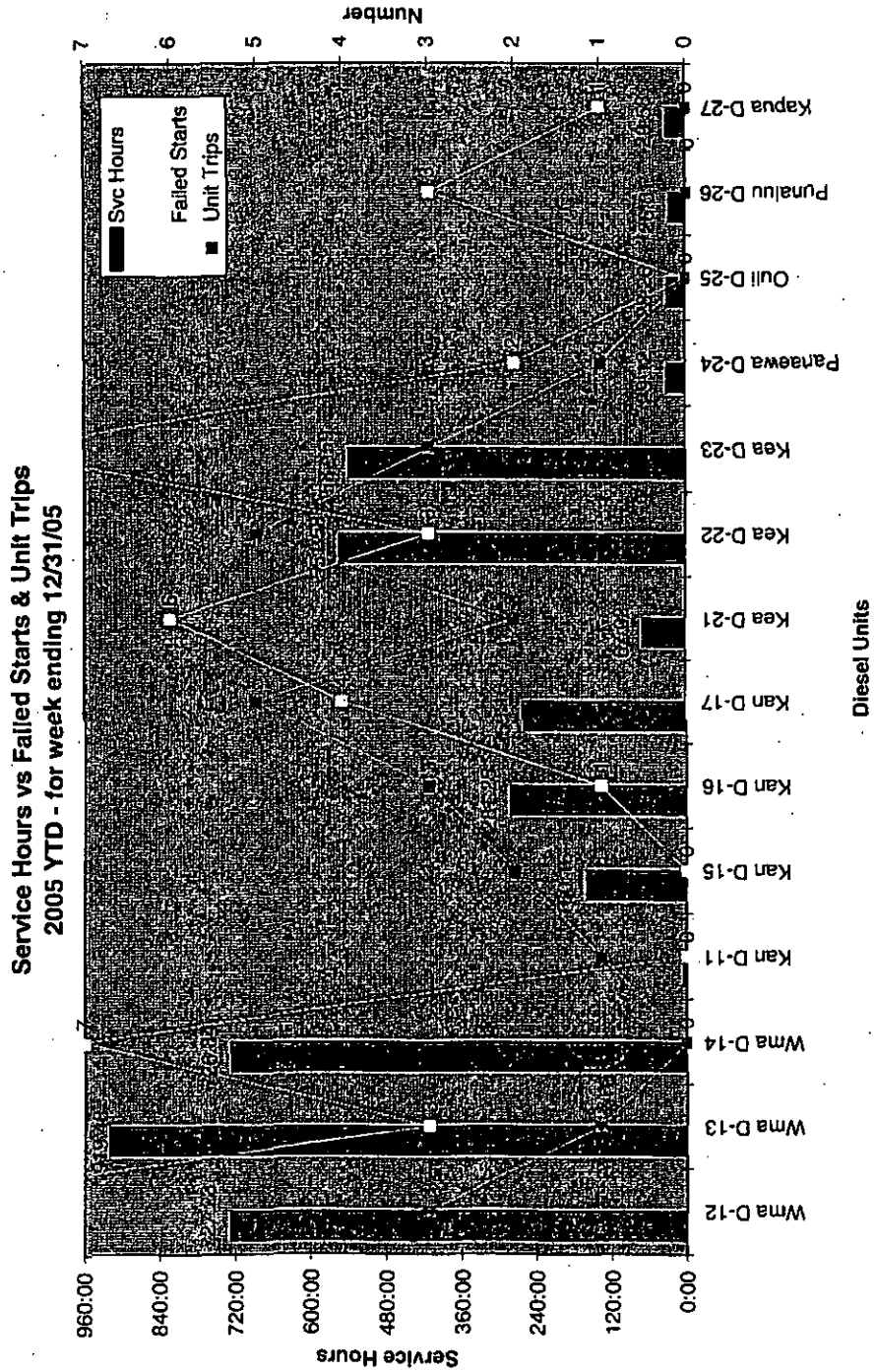
Service Hours vs Failed Starts & Unit Trips
2005 YTD - for week ending 12/31/05
Svc Hours
Failed Starts
Unit Trips
Service Hours
Number
960:00
840:00
720:00
600:00
480:00
360:00
240:00
120:00
0:00
0
1
2
3
4
5
6
7
Wma D-12
Wma D-13
Wma D-14
Kan D-11
Kan D-15
Kan D-16
Kan D-17
Kea D-21
Kea D-22
Kea D-23
Panaewa D-24
Ouli D-25
Puualuu D-26
Kapua D-27
Diesel Units

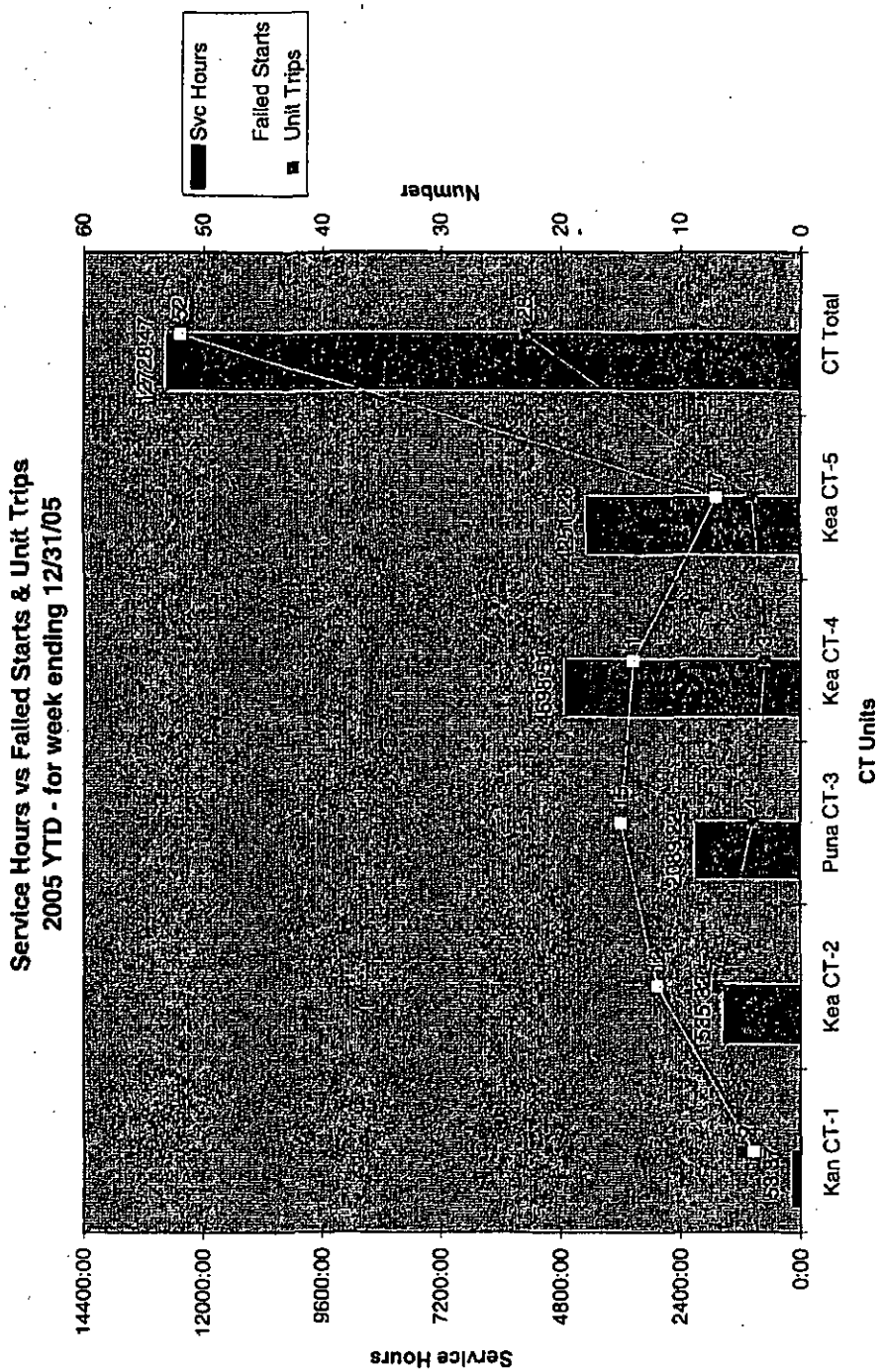
Service Hours vs Failed Starts & Unit Trips
2005 YTD - for week ending 12/31/05
Svc Hours
Failed Starts
Unit Trips
Number
Service Hours
14400:00
12000:00
9600:00
7200:00
4800:00
2400:00
0:00
60
50
40
30
20
10
0
Kan CT-1
Kea CT-2
Puna CT-3
Kea CT-4
Kea CT-5
CT Total
CT Units

2005 YTD - For Week Ending 12/31/05	net GWH	(a) Svc Hours	(b) Failed Starts	(c) Unit Trips	(d) Unit Starts	(b/d) % Failed Starts
Hill No. 6	147	7653:22	1	1	15	7%
Hill No. 5	83	7267:47	0	0	9	0%
Puna Steam	88	7322:18	0	2	10	0%
Shp No. 3	3	741:15	1	1	71	1%
Shp No. 4	5	941:06	0	4	99	0%
Steam Total	327 gwh	23925:48	2	8	204	1%
Wma D-12		727:23	10	3	418	2%
Wma D-13		919:48	3	1	495	1%
Wma D-14		726:34	7	0	416	2%
Waimea Diesels	5	2373:47	20	4	1329	2%
Kan D-11		4:45	0	1	4	0%
Kan D-15		160:16	0	2	128	0%
Kan D-16		281:25	1	3	210	0%
Kan D-17		259:16	4	5	211	2%
Kanoelehua Diesels	2	705:44	5	11	553	1%
Kea D-21		67:02	6	2	58	10%
Kea D-22		551:58	3	5	236	1%
Kea D-23		537:59	8	3	203	4%
Keahole Diesels	3	1157:00	17	10	497	3%
Panaewa D-24		29:12	2	1	85	2%
Outi D-25		28:26	0	0	76	0%
Punaluu D-26		26:01	3	0	69	4%
Kapua D-27		29:58	1	0	74	1%
Dispersed Generation	0	113:39	6	1	304	2%
Diesel Total	9 gwh	4350:11	48	26	2683	2%
Kan CT-1	1	153:37	4	5	47	9%
Kea CT-2	14	1535:32	12	7	204	6%
Puna CT-3	27	2089:22	15	4	256	6%
Kea CT-4	76	4698:51	14	3	349	4%
Kea CT-5	65	4251:23	7	4	352	2%
CT Total	183 gwh	12728:47	52	23	1208	4%
Total System	519 gwh	41004:47	102	57	4095	2%

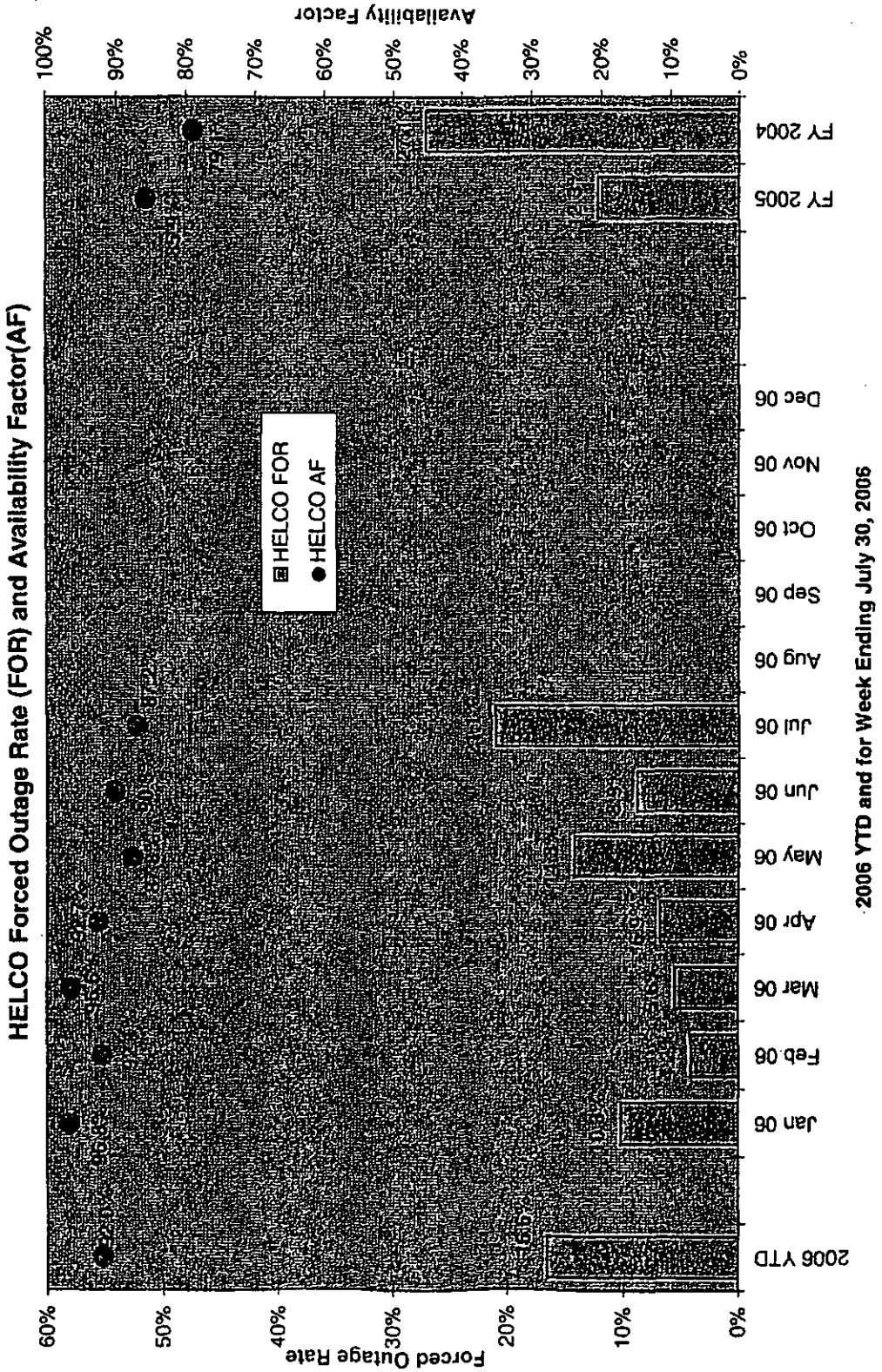
HELCO Forced Outage Rate (FOR) and Availability Factor(AF)
HELCO FOR
HELCO AF
Forced Outage Rate
Availability Factor
60%
50%
40%
30%
20%
10%
0%
100%
90%
80%
70%
60%
50%
40%
30%
20%
10%
0%
2006 YTD
Jan 06
Feb 06
Mar 06
Apr 06
May 06
Jun 06
Jul 06
Aug 06
Sep 06
Oct 06
Nov 06
Dec 06
FY 2005
FY 2004
2006 YTD and for Week Ending July 30, 2006

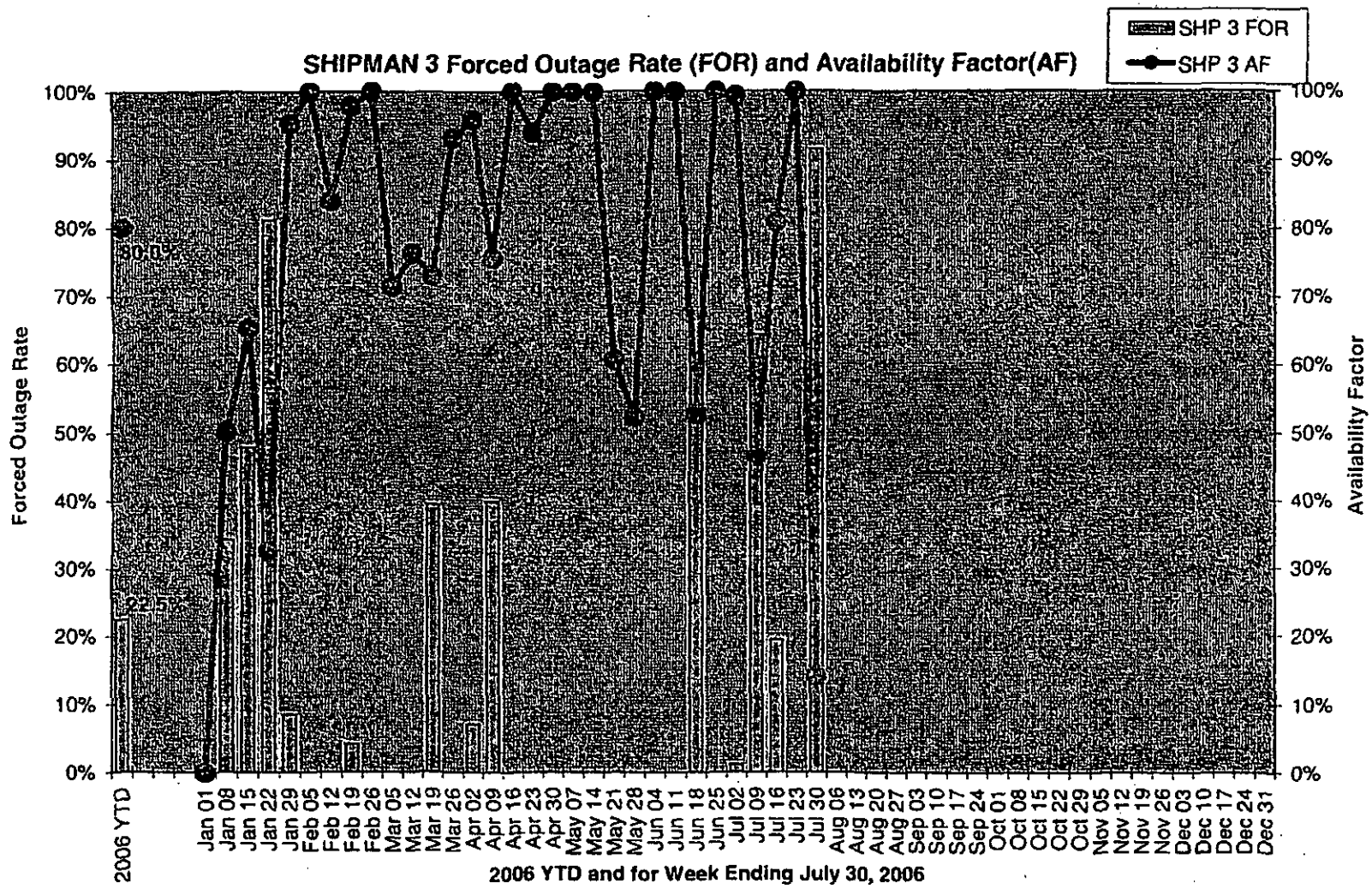
SHIPMAN 3 Forced Outage Rate (FOR) and Availability Factor(AF)
SHP 3 FOR
SHP 3 AF
Forced Outage Rate
Availability Factor
100%
90%
80%
70%
60%
50%
40%
30%
20%
10%
0%
90.0%
22.5%
2006 YTD
Jan 01
Jan 08
Jan 15
Jan 22
Jan 29
Feb 05
Feb 12
Feb 19
Feb 26
Mar 05
Mar 12
Mar 19
Mar 26
Apr 02
Apr 09
Apr 16
Apr 23
Apr 30
May 07
May 14
May 21
May 28
Jun 04
Jun 11
Jun 18
Jun 25
Jul 02
Jul 09
Jul 16
Jul 23
Jul 30
Aug 06
Aug 13
Aug 20
Aug 27
Sep 03
Sep 10
Sep 17
Sep 24
Oct 01
Oct 08
Oct 15
Oct 22
Oct 29
Nov 05
Nov 12
Nov 19
Nov 26
Dec 03
Dec 10
Dec 17
Dec 24
Dec 31
2006 YTD and for Week Ending July 30, 2006

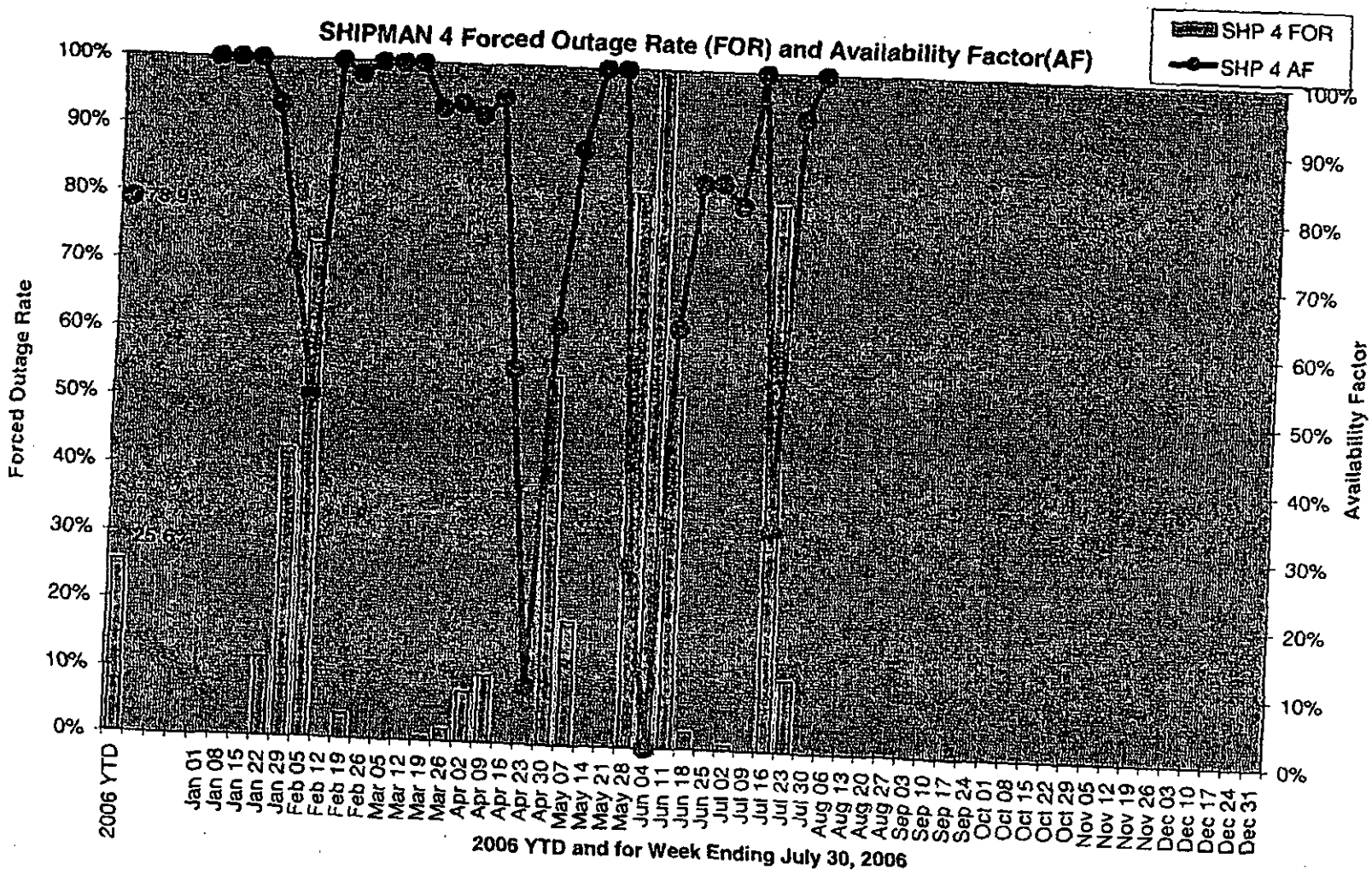
SHIPMAN 4 Forced Outage Rate (FOR) and Availability Factor(AF)
SHP 4 FOR
SHP 4 AF
Forced Outage Rate
Availability Factor
100%
90%
80%
70%
60%
50%
40%
30%
20%
10%
0%
2006 YTD
Jan 01
Jan 08
Jan 15
Jan 22
Jan 29
Feb 05
Feb 12
Feb 19
Feb 26
Mar 05
Mar 12
Mar 19
Mar 26
Apr 02
Apr 09
Apr 16
Apr 23
Apr 30
May 07
May 14
May 21
May 28
Jun 04
Jun 11
Jun 18
Jun 25
Jul 02
Jul 09
Jul 16
Jul 23
Jul 30
Aug 06
Aug 13
Aug 20
Aug 27
Sep 03
Sep 10
Sep 17
Sep 24
Oct 01
Oct 08
Oct 15
Oct 22
Oct 29
Nov 05
Nov 12
Nov 19
Nov 26
Dec 03
Dec 10
Dec 17
Dec 24
Dec 31
2006 YTD and for Week Ending July 30, 2006

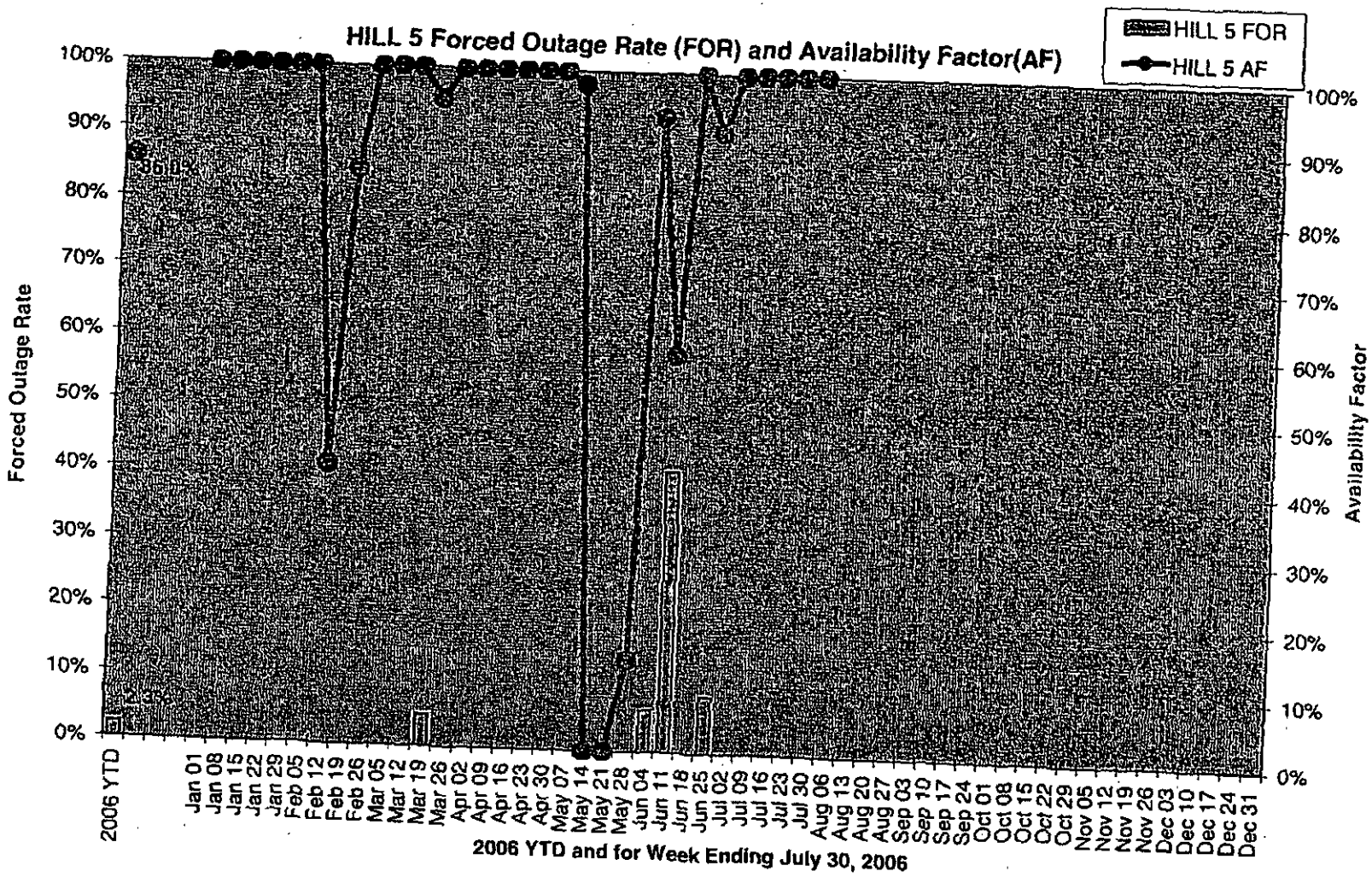
HILL 5 Forced Outage Rate (FOR) and Availability Factor(AF)
HILL 5 FOR
HILL 5 AF
Forced Outage Rate
Availability Factor
100%
90%
80%
70%
60%
50%
40%
30%
20%
10%
0%
2006 YTD
Jan 01
Jan 08
Jan 15
Jan 22
Jan 29
Feb 05
Feb 12
Feb 19
Feb 26
Mar 05
Mar 12
Mar 19
Mar 26
Apr 02
Apr 09
Apr 16
Apr 23
Apr 30
May 07
May 14
May 21
May 28
Jun 04
Jun 11
Jun 18
Jun 25
Jul 02
Jul 09
Jul 16
Jul 23
Jul 30
Aug 06
Aug 13
Aug 20
Aug 27
Sep 03
Sep 10
Sep 17
Sep 24
Oct 01
Oct 08
Oct 15
Oct 22
Oct 29
Nov 05
Nov 12
Nov 19
Nov 26
Dec 03
Dec 10
Dec 17
Dec 24
Dec 31
2006 YTD and for Week Ending July 30, 2006

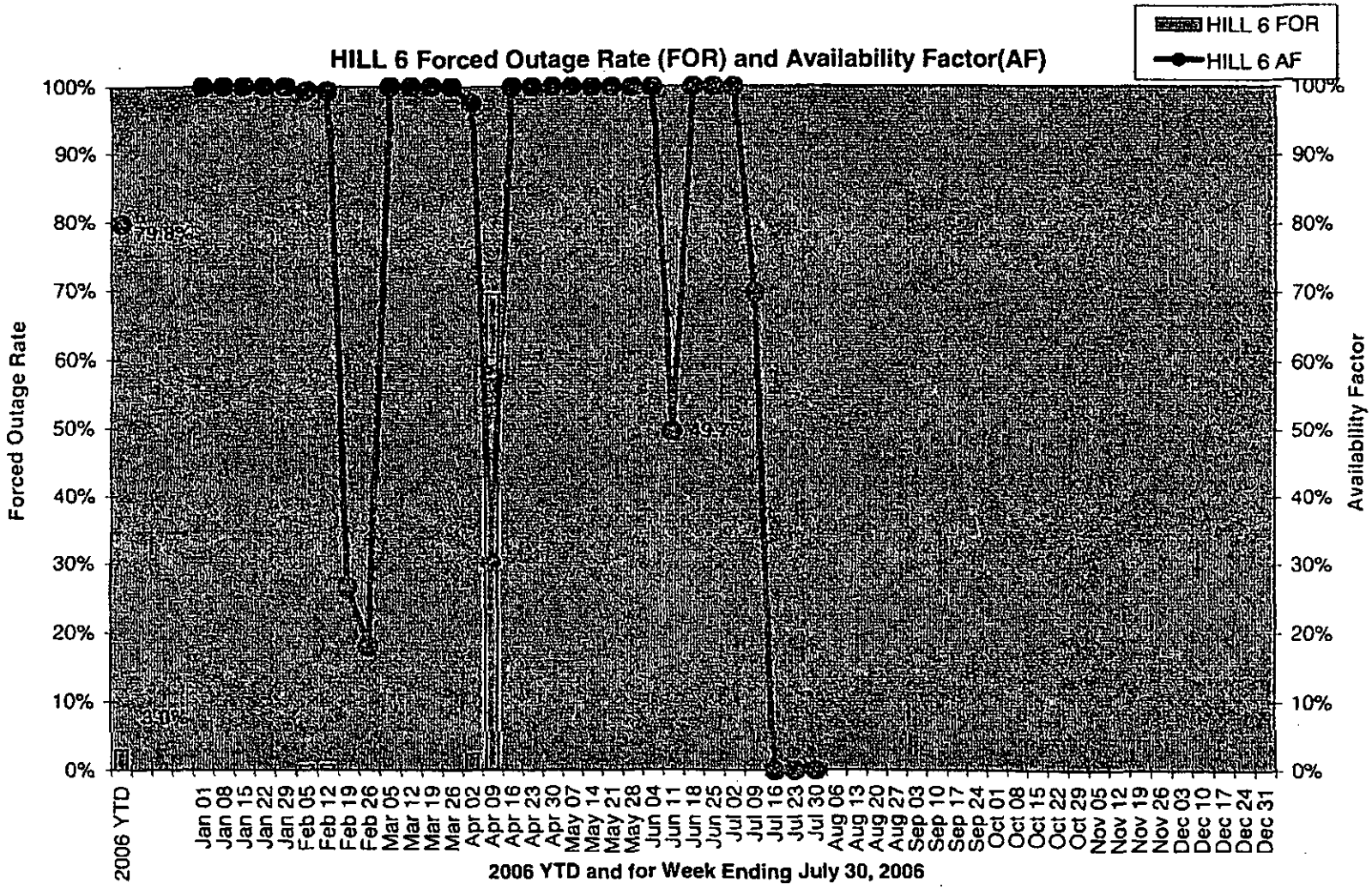
HILL 6 Forced Outage Rate (FOR) and Availability Factor(AF)
HILL 6 FOR
HILL 6 AF
Forced Outage Rate
Availability Factor
100%
90%
80%
70%
60%
50%
40%
30%
20%
10%
0%
79.0%
99.7%
2.0%
2006 YTD
Jan 01
Jan 08
Jan 15
Jan 22
Jan 29
Feb 05
Feb 12
Feb 19
Feb 26
Mar 05
Mar 12
Mar 19
Mar 26
Apr 02
Apr 09
Apr 16
Apr 23
Apr 30
May 07
May 14
May 21
May 28
Jun 04
Jun 11
Jun 18
Jun 25
Jul 02
Jul 09
Jul 16
Jul 23
Jul 30
Aug 06
Aug 13
Aug 20
Aug 27
Sep 03
Sep 10
Sep 17
Sep 24
Oct 01
Oct 08
Oct 15
Oct 22
Oct 29
Nov 05
Nov 12
Nov 19
Nov 26
Dec 03
Dec 10
Dec 17
Dec 24
Dec 31
2006 YTD and for Week Ending July 30, 2006

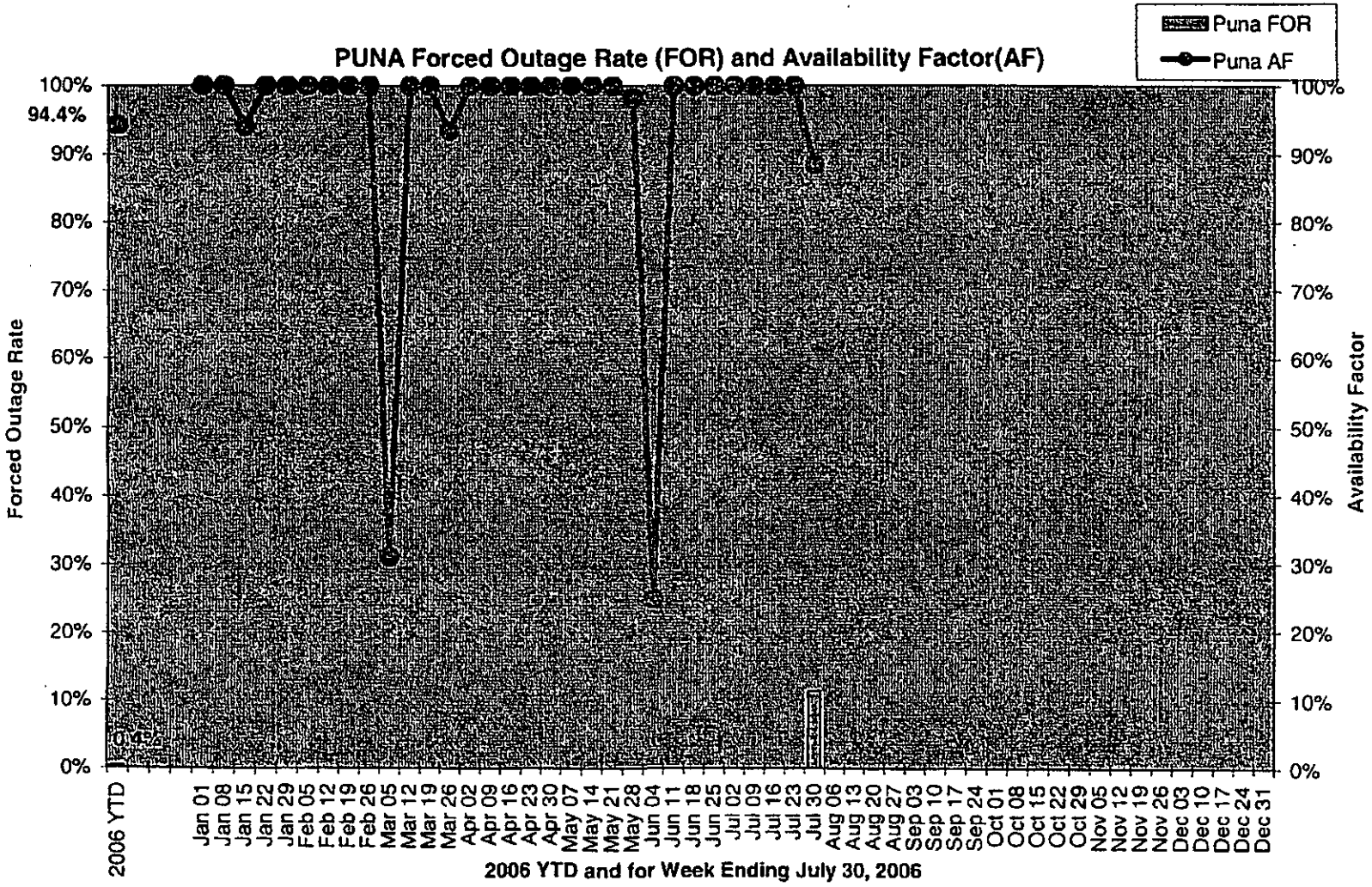
PUNA Forced Outage Rate (FOR) and Availability Factor(AF)
Puna FOR
Puna AF
Forced Outage Rate
Availability Factor
100%
90%
80%
70%
60%
50%
40%
30%
20%
10%
0%
94.4%
0.4%
2006 YTD
Jan 01
Jan 08
Jan 15
Jan 22
Jan 29
Feb 05
Feb 12
Feb 19
Feb 26
Mar 05
Mar 12
Mar 19
Mar 26
Apr 02
Apr 09
Apr 16
Apr 23
Apr 30
May 07
May 14
May 21
May 28
Jun 04
Jun 11
Jun 18
Jun 25
Jul 02
Jul 09
Jul 16
Jul 23
Jul 30
Aug 06
Aug 13
Aug 20
Aug 27
Sep 03
Sep 10
Sep 17
Sep 24
Oct 01
Oct 08
Oct 15
Oct 22
Oct 29
Nov 05
Nov 12
Nov 19
Nov 26
Dec 03
Dec 10
Dec 17
Dec 24
Dec 31
2006 YTD and for Week Ending July 30, 2006

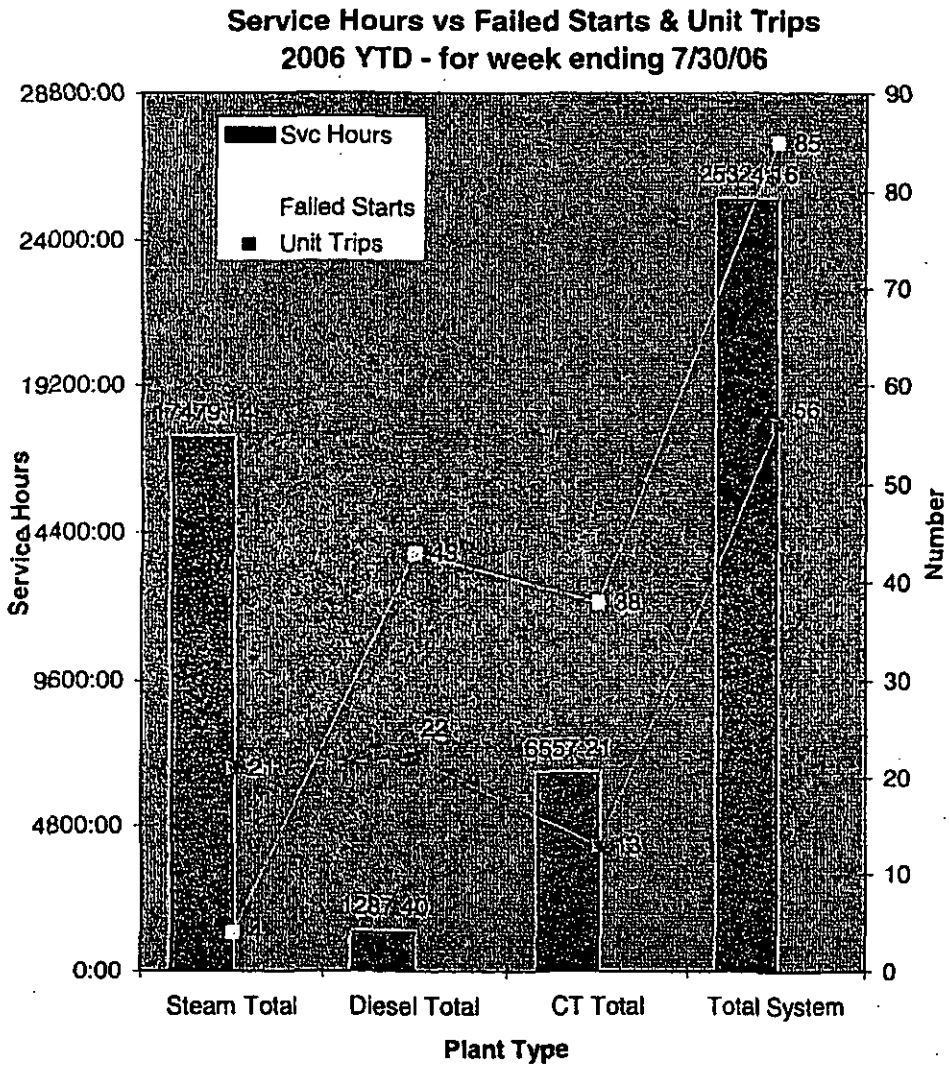
Service Hours vs Failed Starts & Unit Trips
2006 YTD - for week ending 7/30/06
Svc Hours
Failed Starts
Unit Trips
Service Hours
Number
Plant Type
Steam Total
Diesel Total
CT Total
Total System
28800:00
24000:00
19200:00
14400:00
9600:00
4800:00
0:00
90
80
70
60
50
40
30
20
10
0
17479.14
21
4
1287.40
22
6557.21
13
25324.16
85
56
49
38

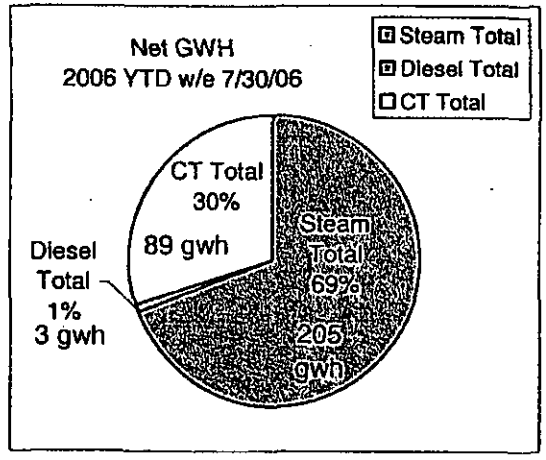
Net GWH
2006 YTD w/e 7/30/06
Steam Total
Diesel Total
CT Total
CT Total
30%
89 gwh
Diesel
Total
1%
3 gwh
Steam
Total
69%
205
gwh

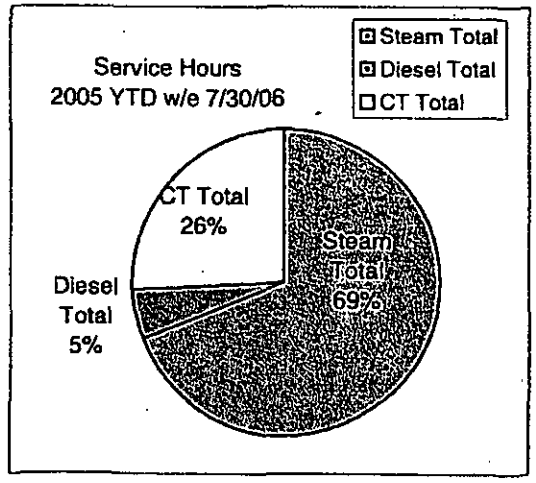
Service Hours
2005 YTD w/e 7/30/06
Steam Total
Diesel Total
CT Total
CT Total
26%
Diesel
Total
5%
Steam
Total
69%

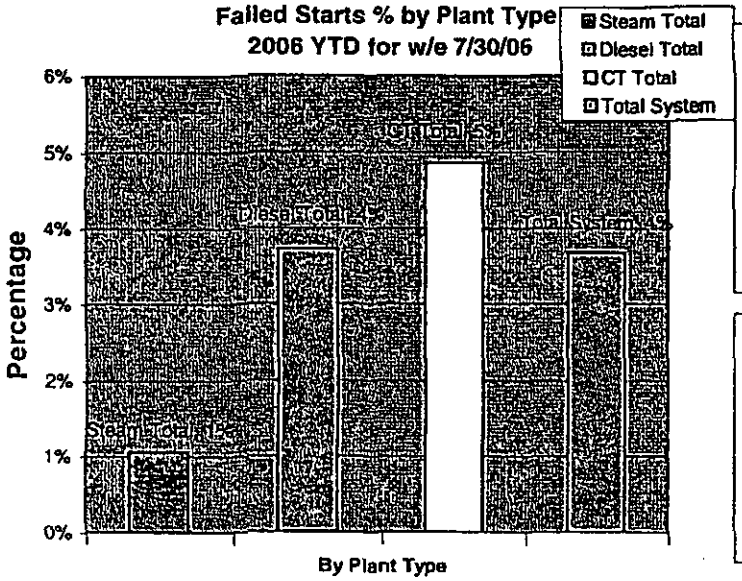
Failed Starts % by Plant Type
2006 YTD for w/e 7/30/06
Steam Total
Diesel Total
CT Total
Total System
Percentage
6%
5%
4%
3%
2%
1%
0%
By Plant Type

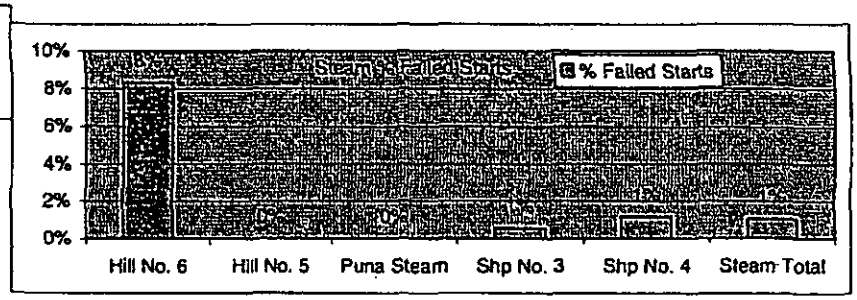
% Failed Starts
10%
8%
6%
4%
2%
0%
Hill No. 6
Hill No. 5
Puna Steam
Shp No. 3
Shp No. 4
Steam Total

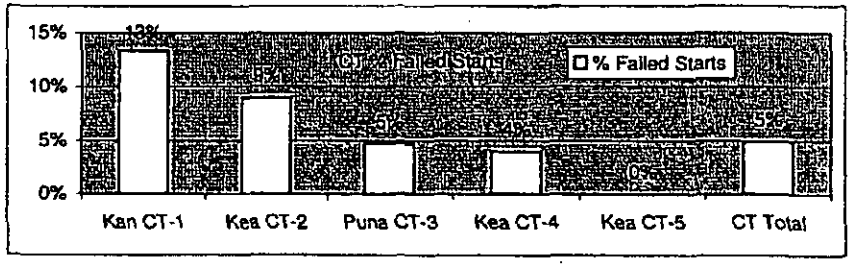
% Failed Starts
15%
10%
5%
0%
Kan CT-1
Kea CT-2
Puna CT-3
Kea CT-4
Kea CT-5
CT Total

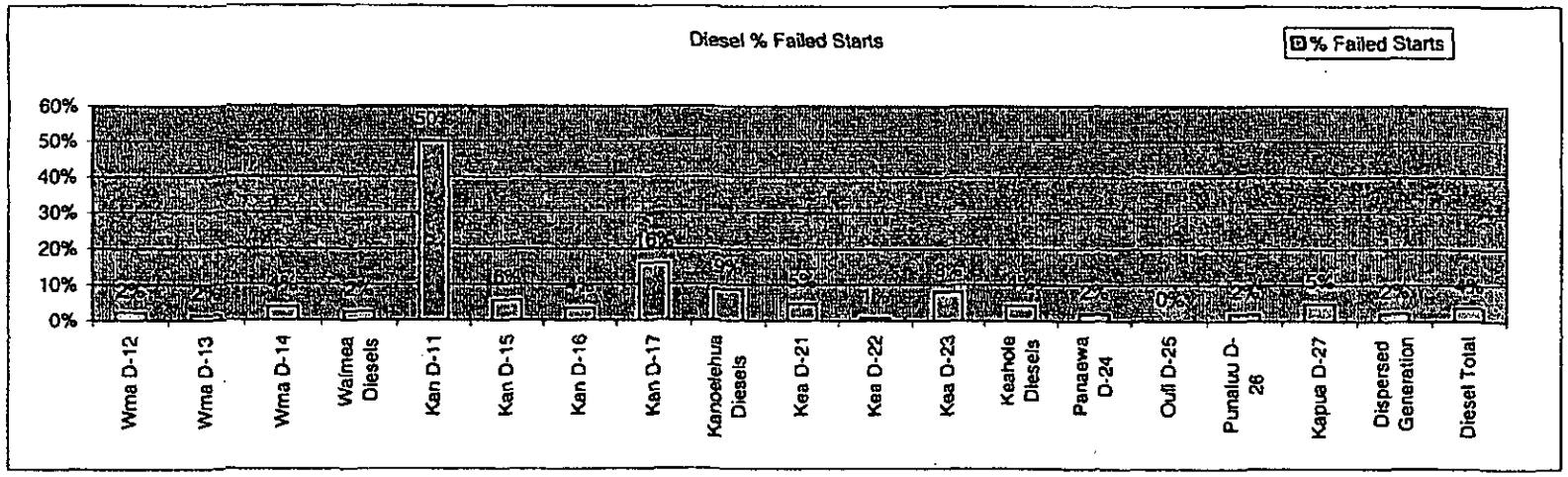
Diesel % Failed Starts
% Failed Starts
60%
50%
40%
30%
20%
10%
0%
Wma D-12
Wma D-13
Wma D-14
Waimea Diesels
Kan D-11
Kan D-15
Kan D-16
Kan D-17
Kapolehua Diesels
Kea D-21
Kea D-22
Kea D-23
Keahole Diesels
Panaewa D-24
Olil D-25
Punaluu D-26
Kapua D-27
Dispersed Generation
Diesel Total

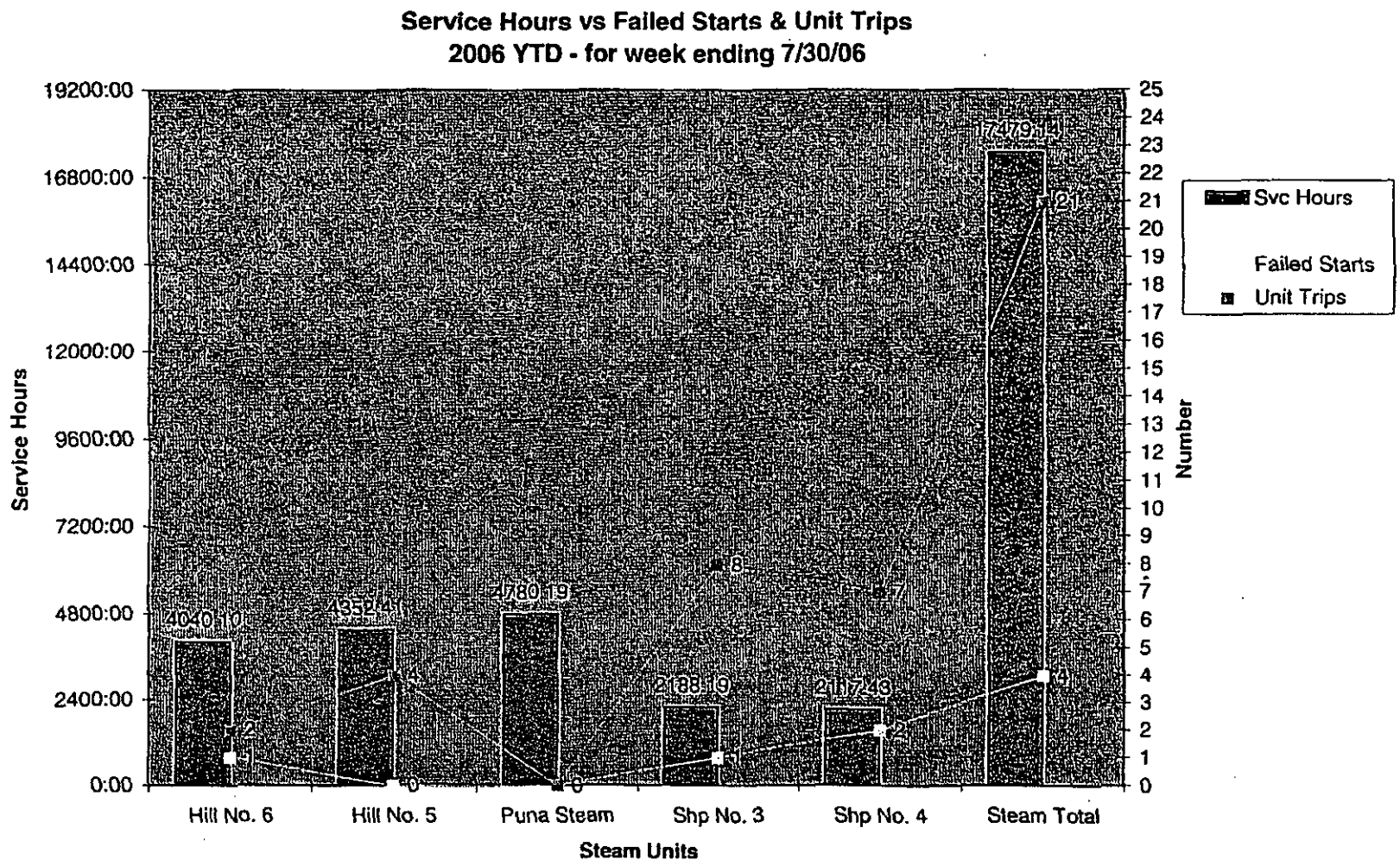
Service Hours vs Failed Starts & Unit Trips
2006 YTD - for week ending 7/30/06
Service Hours
19200:00
16800:00
14400:00
12000:00
9600:00
7200:00
4800:00
2400:00
0:00
Number
25
24
23
22
21
20
19
18
17
16
15
14
13
12
11
10
9
8
7
6
5
4
3
2
1
0
4040:10
4352:41
4780:19
2188:19
2117:43
17479:14
Svc Hours
Failed Starts
Unit Trips
Hill No. 6
Hill No. 5
Puna Steam
Shp No. 3
Shp No. 4
Steam Total
Steam Units

CA-IR-253
DOCKET NO. 05-0315
ATTACHMENT 4
PAGE 10 OF 13

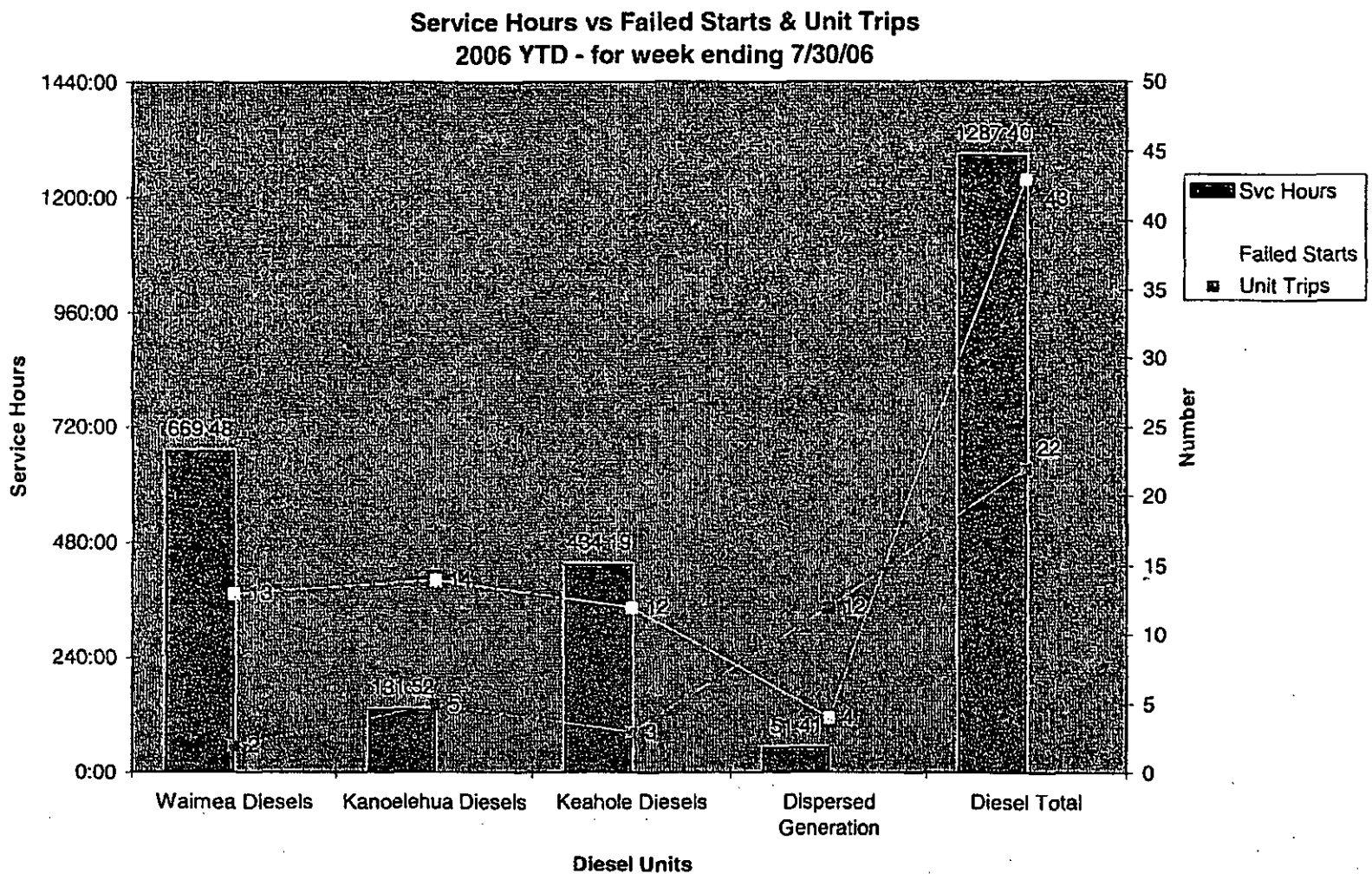

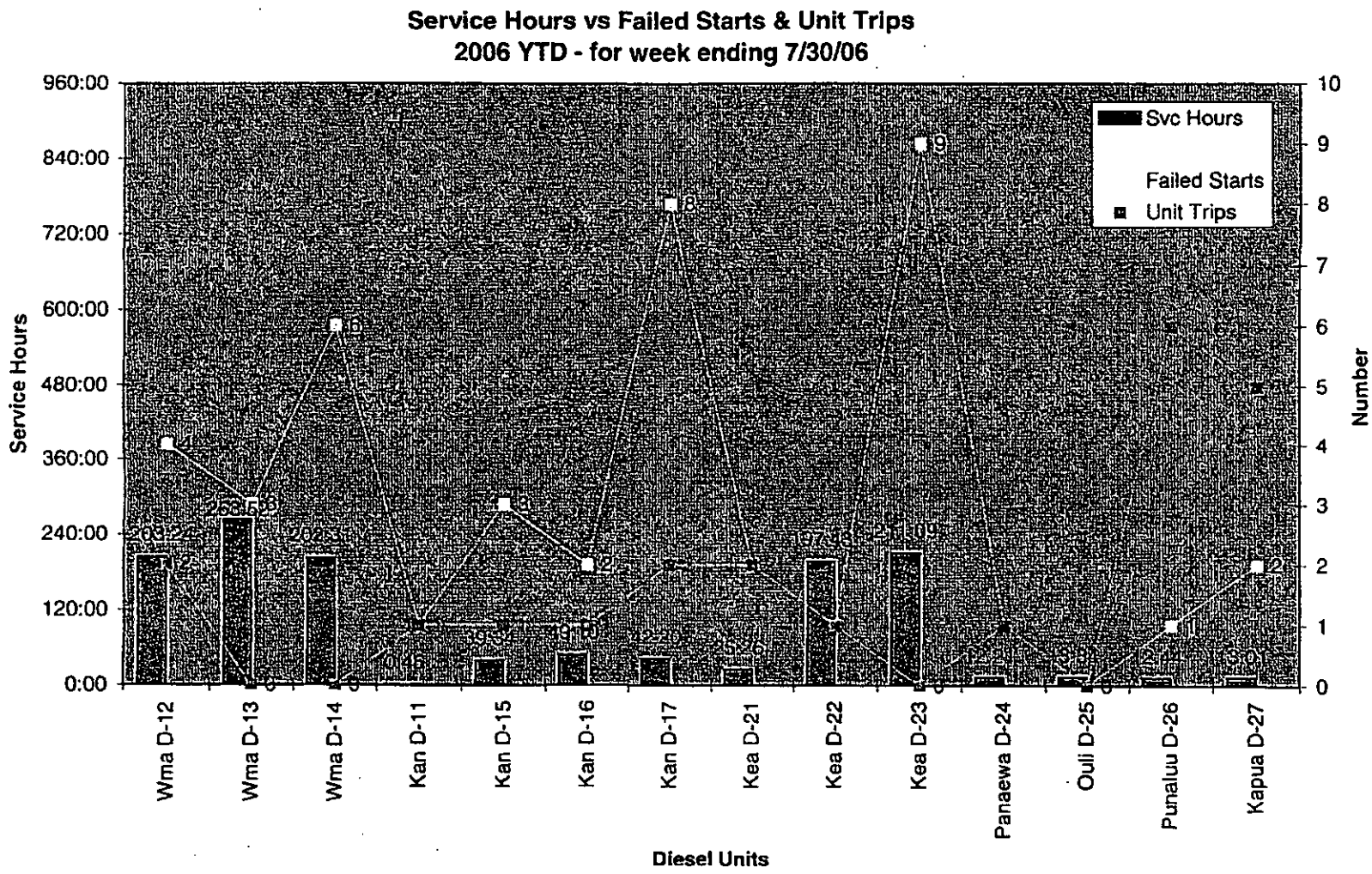
Service Hours vs Failed Starts & Unit Trips
2006 YTD - for week ending 7/30/06
Service Hours
Number
Diesel Units
Svc Hours
Failed Starts
Unit Trips
960:00
840:00
720:00
600:00
480:00
360:00
240:00
120:00
0:00
10
9
8
7
6
5
4
3
2
1
0
Wma D-12
Wma D-13
Wma D-14
Kan D-11
Kan D-15
Kan D-16
Kan D-17
Kea D-21
Kea D-22
Kea D-23
Panaewa D-24
Ouli D-25
Punaluu D-26
Kapua D-27

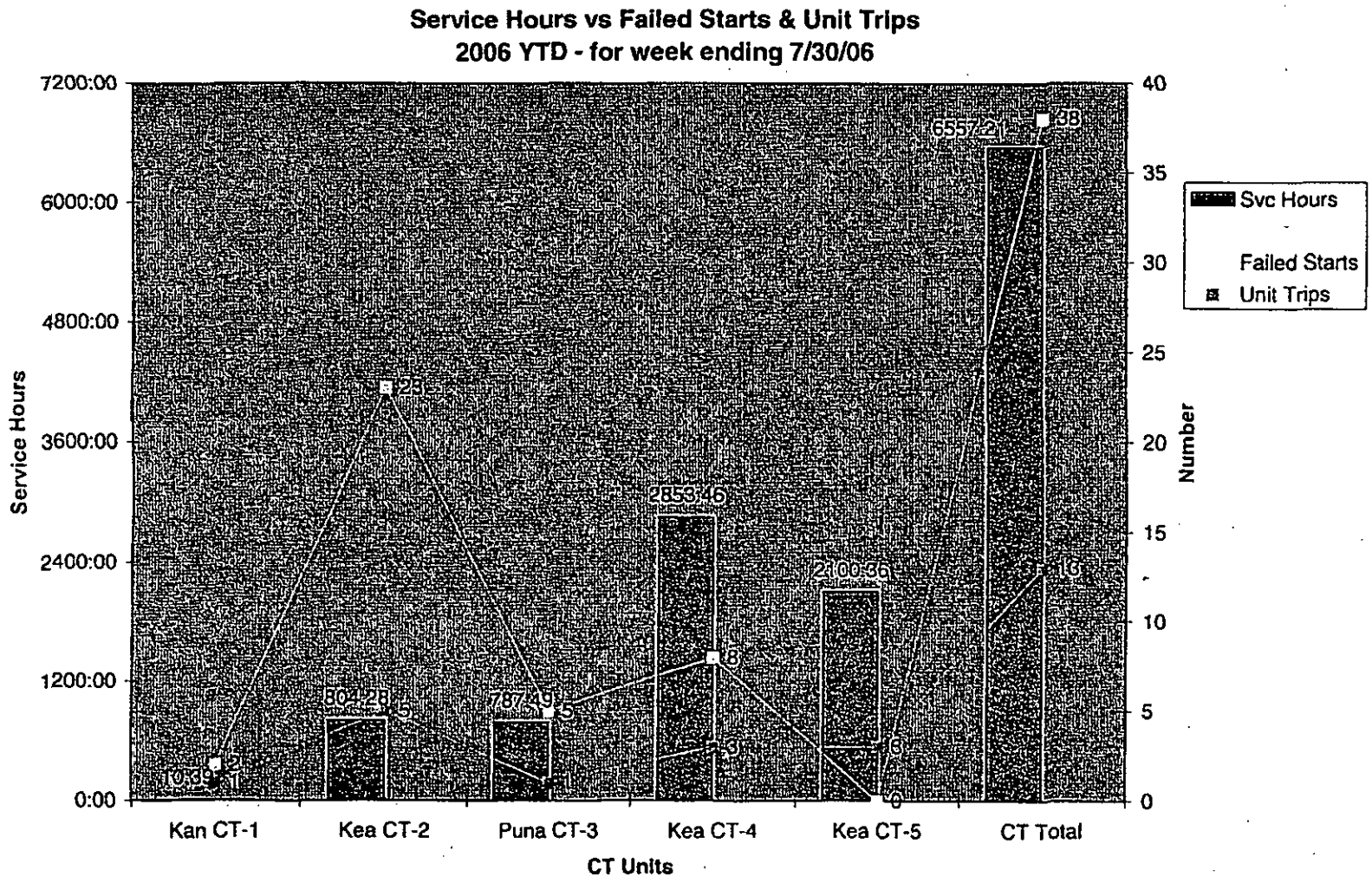
Service Hours vs Failed Starts & Unit Trips
2006 YTD - for week ending 7/30/06
Service Hours
7200:00
6000:00
4800:00
3600:00
2400:00
1200:00
0:00
Number
40
35
30
25
20
15
10
5
0
Svc Hours
Failed Starts
Unit Trips
10:39
2
1
23
504:28
5
787:49
5
1
2853:46
8
3
2100:36
6
0
6557:21
38
7
13
Kan CT-1
Kea CT-2
Puna CT-3
Kea CT-4
Kea CT-5
CT Total
CT Units

2006 YTD - For Week Ending 7/30/06	net GWH	(a) Svc Hours	(b) Failed Starts	(c) Unit Trips	(d) Unit Starts	(b/d) % Failed Starts
Hill No. 6	78	4040:10	1	2	12	8%
Hill No. 5	50	4352:41	0	4	12	0%
Puna Steam	55	4780:19	0	0	10	0%
Shp No. 3	12	2188:19	1	8	174	1%
Shp No. 4	11	2117:43	2	7	170	1%
Steam Total	205 gwh	17479:14	4	21	378	1%
Wma D-12		203:24	4	2	181	2%
Wma D-13		263:52	3	0	198	2%
Wma D-14		202:31	6	0	157	4%
Waimea Diesels	2	669:48	13	2	536	2%
Kan D-11		0:46	1	1	2	50%
Kan D-15		39:34	3	1	52	6%
Kan D-16		49:10	2	1	55	4%
Kan D-17		42:20	8	2	50	16%
Kanoelehua Diesels	0	131:52	14	5	159	9%
Kea D-21		25:26	2	2	41	5%
Kea D-22		197:43	1	1	119	1%
Kea D-23		211:09	9	0	112	8%
Keahole Diesels	1	434:19	12	3	272	4%
Panaewa D-24		12:21	1	1	51	2%
Ouli D-25		13:34	0	0	48	0%
Punaluu D-26		12:44	1	6	48	2%
Kapua D-27		13:01	2	5	41	5%
Dispersed Generation	0	51:41	4	12	188	2%
Diesel Total	3 gwh	1287:40	43	22	1155	4%
Kan CT-1	0	10:39	2	1	15	13%
Kea CT-2	7	804:28	23	5	257	9%
Puna CT-3	11	787:49	5	1	107	5%
Kea CT-4	42	2853:46	8	3	202	4%
Kea CT-5	29	2100:36	0	3	200	0%
CT Total	89 gwh	6557:21	38	13	781	5%
Total System	297 gwh	25324:16	85	56	2314	4%

CA-IR-254

Ref: HELCO Response to CA-IR-55, Attachment 1, O&M History for Projects.

According to part (a) of the response to CA-IR-55, "The TY budget adjustments and normalizations are made at the NARUC account levels and not by RA." However, in Attachment 1, an "O&M History" for "Projects" is provided by RA. In order to better utilize the information provided in both documents, please provide the following to compare the Company's proposed O&M levels for "Projects:"

a. Summarize the Attachment 1 historical annual actual expense data in each year by unit (i.e., CT-1, CT-2, Hill 5, Hill 6, etc.).

b. Summarize the Attachment 1 "Year Total 2006" actual expense data by unit, indicating how many months of actual expense is included therein.

c. Summarize the Attachment 1 "Unadjusted 2006 Budget" column by unit.

d. Insert a "HELCO Test Year Proposed" column, indicating the proposed O&M project expense amounts by unit (not by RA), after all normalization and budget adjustments are reflected.

e. Explain why the HELCO Proposed overhaul costs for each unit, as provided in response to part (d) of this information request, are reasonable in light of the historically incurred cost levels for the unit (per response to parts (a) and (b)) of this information request.

f. To the extent possible, please separate the information provided in response to parts (a) through (d) of this information request between the labor and non-labor expenses for each unit in each year.

HELCO Response:

a. See Attachment 1 (revised attachment to CA-IR-55) for historical annual actual project expense data in each year by unit (i.e., CT-1, CT-2, Hill 5, Hill 6, etc.).

b. See Attachment 1 "Year Total 2006" actual project expense data by unit. Seven months of actual expense is included therein (January – July 2006).

c. See Attachment 1 "Unadjusted 2006 Budget" column by unit, as well as an "Adjusted 2006 Budget" column by unit to reflect the budget adjustments identified in HELCO T-5, pages 52-53.

d. See Attachment 1 for "2006 Normalized Test Year Estimate" column, indicating the proposed O&M project expense amounts by unit (not by RA), after all normalization and budget adjustments are reflected.

e. See Attachment 2 to CA-IR-255 for the HELCO normalized Test Year 2006 overhaul costs by unit. The normalized test year costs are reasonable in light of the historically incurred cost levels for the units (per response to parts (a) and (b) of this information request), as well as in light of the actual costs expected in 2006 and projected costs for overhauls expected in 2007. Attachment 2 to CA-IR-254 provides an updated estimate of overhaul costs for 2006, taking into account actuals through August 2006, and estimated costs for 2007. Although the costs vary year to year, this is a reflection of the scope of each individual overhaul, which includes items based on the actual condition of the unit when it is overhauled. While there are standard tasks to be done during overhauls, items are discovered needing further attention only after equipment is disassembled, inspected or otherwise discovered during the course of the overhaul work. For example, work on the Hydro penstocks, while not an annual recurring expense, is work that was done based on repairs to the Puueo Penstock in 2005 and resultant clearing and surveying of the pipeline. This process identified problem areas that need to be addressed. This will include installation of a cathodic protection system to protect the pipelines from corrosion. Such a system does not exist today. The Hill 5 overhaul was reduced in scope; thus its actual expense was less than budget. Hill 6 costs have been accrued (and not yet paid), and thus actuals are below budget. The CT-1 overhaul is scheduled for September. CT-4 and CT-5 were both anticipated to require a hot section in 2006, but the CT-5 hot section was moved to 2007 as its current lower run hours did not warrant a hot section replacement at this time. This was reflected in the budget adjustments,

as well as in the normalization adjustments.

f. The information provided in response to parts (a) through (d) of this information request has been separated in total. It is not possible to provide the labor and non-labor data for each unit (project) in each year. There is no report that summarizes this information by project. However, in the alternative, see Attachment 1, columns L and M for the recorded 1/1/2000 through 7/31/2006 labor and non-labor Production Maintenance expense for each overhaul project. For HELCO's 2006 Normalized Test Year Expense (column L on Attachment 1 of CA-IR-254) see: 1) CA-IR-2, HELCO T-5, Attachment 1B, Page 1 for the proposed direct labor and direct non labor overhaul expense per project included in the 2006 Test Year Operating Budget; and 2) Attachment 1, CA-IR-254, columns I and J for related adjustments and normalizations made against overhaul non-labor expenses. There were no adjustments and normalizations made to overhaul labor. Attachment 1, CA-IR-254, column H is information which has been grossed up for oncosts and overheads.

Hawaii Electric Light Company Inc.

2006 TEST YEAR
2000 - 2006 O&M History - Projects

Source: Essbase D HG0 Generation, Ellipse on 08/29/06

Description	RA	A YearTotal 2000 Actual	B YearTotal 2001 Actual	C YearTotal 2002 Actual	D YearTotal 2003 Actual	E YearTotal 2004 Actual	F YearTotal 2005 Actual	G (1/1/00 to 7/31/06) YearTotal 2006 Actual	H YearTotal Unadjusted 2006 Budget with Oncosts	I (Non-Labor) Adjustments	J Adjusted 2006 Budget with Oncosts	K (Non-Labor) Normalizations	L 2006 Normalized Test Year Estimate with Oncosts	M Actual 1/1/2000 to 7/31/2006 Labor	N = Sum(A to G) - M Non-Labor
Puna Steam Unit															
PR H0000042 PunaOvrhal	HGM	1,106	-	-	-	-	-	247	-	-	-	-	-	-	1,353
PR H0000170 Puna Ohaul	HGM	90,122	865	77	-	428	-	-	-	-	-	-	-	34,699	56,793
PR H0000356 Puna Turb Ovr	HGM	-	421,754	(5,916)	49,403	-	-	-	-	-	-	-	-	133,024	332,217
PR H0000601 P1Turb Ovh '0	HGM	-	-	396,793	-	-	-	-	-	-	-	-	-	67,225	329,568
PR H0000610 P1insp'03	HGM	-	-	-	390,247	169,359	(24,008)	-	-	-	-	-	-	92,830	442,767
PR H0000696 Punainsp04	HGM	-	-	-	-	363,925	28,162	-	-	-	-	-	-	112,088	280,000
PR H0001214 Punainsp05	HGM	-	-	-	-	-	683,161	14,751	-	-	-	-	-	73,575	624,337
PR H0001220 PunaP&ID	HGT	-	-	-	-	-	21,735	57,655	-	50,000	50,000	(20,000)	30,000	19,290	60,100
PR H0001258 PnaGasDuc	HGM	-	-	-	-	-	17,187	-	-	-	-	-	-	-	17,187
PR H0001259 PnaChemCl	HGM	-	-	-	-	-	-	-	137,000	-	137,000	-	137,000	-	-
PR H0001279 PunaCWP05	HGM	-	-	-	-	-	147,051	(10,201)	-	-	-	-	-	1,120	135,730
PR H0001400 Punainsp06	HGM	-	-	-	-	-	-	8,547	403,012	-	403,012	-	403,012	1,186	7,361
		91,228	**422,619**	**390,954**	**439,650**	**533,711**	**873,288**	**70,999**	**540,012**	**50,000**	**590,012**	**(20,000)**	**570,012**	**535,035**	**2,287,414**
Shipman 3															
PR H0000034 S3Overhaul	HGM	-	-	-	-	149	-	-	-	-	-	-	-	149	0
PR H0000163 Shp3 Ohaul	HGM	147,208	7,954	-	-	-	-	-	-	-	-	-	-	38,958	116,205
PR H0000602 S3 Insp'02	HGM	-	-	26,666	55,948	-	-	-	-	-	-	-	-	2,909	79,705
PR H0000604 S3 insp 03	HGM	-	-	-	492,086	72,397	-	-	-	-	-	-	-	105,337	459,147
PR H0000688 S3 Turb OH 04	HGM	-	-	-	-	641,972	70,133	-	-	-	-	-	-	130,310	581,795
PR H0001209 S3 insp 05	HGM	-	-	-	-	-	135,967	3,454	-	-	-	-	-	39,832	99,588
PR H0001224 Ship3 Fuel	HGT	-	-	-	-	-	62,448	-	-	-	-	-	-	-	62,448
PR H0001403 S3 insp 06	HGM	-	-	-	-	-	-	8,308	286,636	-	286,636	42,000	328,636	-	8,308
		147,208	**7,954**	**26,666**	**548,034**	**714,518**	**268,547**	**11,762**	**286,636**	**-**	**286,636**	**42,000**	**328,636**	**317,494**	**1,407,196**
Shipman 4															
PR H0000035 S4Overhaul	HGM	-	-	-	-	-	-	2,439	-	-	-	-	-	2,439	(0)
PR H0000164 Shp4 Ohaul	HGM	152,609	-	-	-	-	-	-	-	-	-	-	-	38,350	114,260
PR H0000359 S4 Blrinsp	HGM	-	133	-	-	-	-	-	-	-	-	-	-	131	3
PR H0000603 S4 Insp'02	HGM	-	-	4,966	4,388	-	-	-	-	-	-	-	-	1,174	8,180
PR H0000605 S4 Turb OH '03	HGM	-	-	-	664,763	99,435	-	-	-	-	-	-	-	93,383	670,835
PR H0000689 S4 Inst 04	HGM	-	-	-	-	29,443	17,277	-	-	-	-	-	-	1,499	45,220
PR H0001210 S4 Insp 05	HGM	-	-	-	-	-	387,285	-	-	-	-	-	-	76,980	310,305
PR H0001219 Ship WatBo	HGM	-	-	-	-	-	38,058	7,720	-	-	-	-	-	2,765	43,014
PR H0001221 ShipP&ID	HGT	-	-	-	-	-	28,370	38,386	-	100,000	100,000	(46,700)	53,300	10,781	55,975
PR H0001225 ShipPiping	HGM	-	-	-	-	-	55,941	(395)	-	-	-	-	-	2,940	52,607
PR H0001226 ShipTraps	HGM	-	-	-	-	-	28,266	-	-	-	-	-	-	-	28,266
PR H0001404 S4 Insp 06	HGM	-	-	-	-	-	-	8,110	286,636	-	286,636	42,000	328,636	-	8,110
		152,609	**133**	**4,966**	**669,151**	**128,877**	**555,197**	**56,259**	**286,636**	**100,000**	**386,636**	**(4,700)**	**381,936**	**230,440**	**1,336,754**

CA-IR-254
DOCKET NO. 05-0315
ATTACHMENT 1
PAGE 1 OF 3
Revised Attach 1 – CA-IR-55

Hawaii Electric Light Company Inc.

2006 TEST YEAR

2000 - 2006 O&M History - Projects

Source: Essbase D HG0 Generation, Ellipse on 08/29/06

		A	B	C	D	E	F	G	H	I	J	K	L	M	N = Sum(A to G) - M
								(1/1/00 to 7/31/06)	YearTotal Unadjusted		Adjusted		2006 Normalized Test Year		
		YearTotal	YearTotal	YearTotal	YearTotal	YearTotal	YearTotal	YearTotal	2006_Budget	(Non-Labor)	2006_Budget	(Non-Labor)	Estimate	Actual 1/1/2000 to 7/31/2006	
Description	RA	2000_Actual	2001_Actual	2002_Actual	2003_Actual	2004_Actual	2005_Actual	2006_Actual	with Oncosts	Adjustments	with Oncosts	Normalizations	with Oncosts	Labor	Non-Labor
Hill 5															
PR H0000036 H5Overhaul	HGM	1,373	-	-	-	-	-	-	-	-	-	-	-	-	1,373
PR H0000165 H5 Ohaul	HGM	233,372	402	-	-	-	-	-	-	-	-	-	-	75,326	158,448
PR H0000360 H5Ovhl2001	HGM	-	152,659	1,155	-	-	-	-	-	-	-	-	-	64,127	89,688
PR H0000597 H5 Turb OH '02	HGM	-	-	831,962	4,868	-	-	-	-	-	-	-	-	173,898	662,932
PR H0000606 H5 Insp '03	HGM	-	-	7,074	613,223	38,140	-	-	-	-	-	-	-	111,522	546,914
PR H0000690 H5 Insp 04	HGM	-	-	-	-	201,820	11,089	-	-	-	-	-	-	44,243	168,666
PR H0001211 H5 Insp 05	HGM	-	-	-	-	-	437,224	24,372	-	-	-	-	-	102,270	359,327
PR H0001399 H5 Insp 06	HGM	-	-	-	-	-	-	256,917	471,445	-	471,445	-	471,445	68,429	188,488
PR H0001440 HillP&ID	HGT	-	-	-	-	-	-	105	-	150,000	150,000	(66,300)	83,700	105	0
		234,745	153,061	840,191	618,091	239,960	448,313	281,395	471,445	150,000	621,445	(66,300)	555,145	639,922	2,175,834
Hill 6															
PR H0000166 H6 Ohaul	HGM	412,796	4,870	-	8,859	-	-	-	-	-	-	-	-	108,906	317,620
PR H0000362 H6 Blrinsp	HGM	-	130,636	-	-	-	-	-	-	-	-	-	-	45,029	85,607
PR H0000598 H6insp'02	HGM	-	-	477,134	3,614	-	-	-	-	-	-	-	-	142,352	338,397
PR H0000608 H6 Turb OH '03	HGM	-	-	2,735	820,779	156,398	-	-	-	-	-	-	-	120,887	859,024
PR H0000692 H6 Insp 04	HGM	-	-	-	-	334,745	45,491	-	-	-	-	-	-	71,603	308,634
PR H0001212 H6 Insp 05	HGM	-	-	-	-	-	325,343	194	-	-	-	-	-	68,396	257,141
PR H0001387 Hydro Dry	HGM	-	-	-	-	-	-	113,124	-	100,000	100,000	-	100,000	11,054	102,070
PR H0001392 VFD Upgrades	HGM	-	-	-	-	-	-	-	-	150,000	150,000	-	150,000	-	-
PR H0001402 H6 Insp 06	HGM	-	-	-	-	-	-	213,760	767,326	-	767,326	230,000	997,326	95,540	118,219
		412,796	135,506	479,869	833,253	491,143	370,834	327,078	767,326	250,000	1,017,326	230,000	1,247,326	663,768	2,386,712
CT-1															
PR H0000167 CT1 Insp	HGM	16,456	-	-	-	-	-	-	-	-	-	-	-	7,122	9,334
PR H0000355 CT1GenInsp	HGM	-	59	-	-	-	-	-	-	-	-	-	-	59	0
PR H0000671 CT1 rewind	HGX	-	-	351,124	111,607	4,144	-	-	-	-	-	-	-	31,268	435,608
PR H0001216 CT1 Insp05	HGX	-	-	-	-	-	131,280	-	-	-	-	-	-	34,373	96,907
PR H0001396 CT1 Insp06	HGX	-	-	-	-	-	-	1,834	57,339	-	57,339	-	57,339	31	1,804
PR H0001158 CT1 Nozzles	HGX	-	-	-	-	-	-	-	-	267,600	267,600	-	267,600	-	-
		16,456	59	351,124	111,607	4,144	131,280	1,834	57,339	267,600	324,939	-	324,939	72,850	543,653
CT-2															
PR H0000041 CT2Ovrhaul	HGM	13,273	-	-	-	-	-	-	-	-	-	-	-	-	13,273
PR H0000168 CT2 Insp	HGM	100,618	21,973	9,453	-	-	-	-	-	-	-	-	-	30,159	101,884
PR H0000138 CT2Noise	HGM	691	936	-	-	-	-	-	-	-	-	-	-	1,627	0
PR H0000271 CT2 LCF	HGM	-	1,791,322	(155,847)	-	-	-	-	-	-	-	-	-	93,259	1,542,215
PR H0000600 CT2Insp'02	HGM	-	-	2,300	5,635	-	-	-	-	-	-	-	-	418	7,517
PR H0000609 CT2Insp'03	HGM	-	-	-	123,737	-	-	-	-	-	-	-	-	29,461	94,276
PR H0000695 CT2 Insp04	HGK	-	-	-	-	159,755	-	-	-	-	-	-	-	12,993	146,761
PR H0001215 CT2 Insp05	HGK	-	-	-	-	-	1,090,883	433,254	-	-	-	-	-	51,451	1,472,687
PR H0001388 WT HMI Repl	HGK	-	-	-	-	-	-	-	-	25,000	25,000	-	25,000	-	-
PR H0001397 CT2 MFI06	HGK	-	-	-	-	-	-	11,090	2,146,227	(700,000)	1,446,227	(700,000)	746,227	6,459	4,631
		114,583	1,814,230	(144,095)	129,371	159,755	1,090,883	444,345	2,146,227	(675,000)	1,471,227	(700,000)	771,227	225,828	3,383,226

CA-IR-254
DOCKET NO. 05-0315
ATTACHMENT 1
PAGE 2 OF 3
Revised Attach 1 – CA-IR-55

Hawaii Electric Light Company Inc.

2006 TEST YEAR

2000 - 2006 O&M History - Projects

Source: Essbase D HG0 Generation, Ellipse on 08/29/06

Description	RA	A YearTotal 2000 Actual	B YearTotal 2001 Actual	C YearTotal 2002 Actual	D YearTotal 2003 Actual	E YearTotal 2004 Actual	F YearTotal 2005 Actual	G (1/1/00 to 7/31/06) YearTotal 2006 Actual	H YearTotal Unadjusted 2006 Budget with Oncosts	I (Non-Labor) Adjustments	J Adjusted 2006 Budget with Oncosts	K (Non-Labor) Normalizations	L 2006 Normalized Test Year Estimate with Oncosts	M Actual 1/1/2000 to 7/31/2006 Labor	N = Sum(A to G) - M Non-Labor
CT-3															
PR H0000169 CT3 Insp	HGM	248,800	42	-	538	-	-	-	-	-	-	-	-	30,159	219,221
PR H0000037 CT3Ovrhaul	HGM	1,526	-	-	-	-	-	-	-	-	-	-	-	1,526	(0)
PR H0000599 CT3 HS '02	HGM	-	-	670	-	-	-	-	-	-	-	-	-	670	0
PR H0000607 CT3insp'03	HGM	-	-	556	46,928	1,190	-	-	-	-	-	-	-	13,965	34,709
PR H0000611 CT3 Stack	HGT	-	-	-	217,791	180,364	-	-	-	-	-	-	-	2,415	395,740
PR H0000691 CT3 Insp04	HGX	-	-	-	-	8,897	43,055	-	-	-	-	-	-	-	51,952
PR H0001129 CT3 Repr04	HGX	-	-	-	-	379,573	9,991	-	-	-	-	-	-	16,889	372,674
PR H0001213 CT3 Insp05	HGX	-	-	-	-	-	163,095	55,426	-	-	-	-	-	28,445	190,077
PR H0001395 CT3 Insp06	HGX	-	-	-	-	-	-	1,281	73,524	-	73,524	-	73,524	618	663
PR CT3 LP Turbine Upgrade	HGX	-	-	-	-	-	-	-	-	-	-	65,000	65,000	-	-
		250,325	42	1,226	265,257	570,024	216,141	56,707	73,524	-	73,524	65,000	138,524	94,688	1,265,035
CT-4															
PR H0000039 CT4Ovrhaul	HGM	-	-	-	-	-	159,532	-	-	-	-	-	-	12,451	147,081
PR H0001398 CT4 Gen06	HGK	-	-	-	-	-	-	901,749	63,232	845,000	908,232	-	908,232	3,948	897,801
PR H0001405 CT4 LP06	HGK	-	-	-	-	-	-	-	50,000	(50,000)	-	65,000	65,000	-	-
		-	-	-	-	-	159,532	901,749	113,232	795,000	908,232	65,000	973,232	16,399	1,044,882
CT-5															
PR H0000040 CT5Ovrhaul	HGM	-	-	-	-	-	21,050	-	-	-	-	-	-	1,922	19,128
PR H0001401 CT5 Hot06	HGK	-	-	-	-	-	-	27,142	1,505,720	(1,405,000)	100,720	-	100,720	7,342	19,800
PR H0001406 CT5 LP06	HGK	-	-	-	-	-	-	-	50,000	(50,000)	-	65,000	65,000	-	-
		-	-	-	-	-	21,050	27,142	1,555,720	(1,455,000)	100,720	65,000	165,720	9,264	38,928
Diesels															
PR H0000357 Kea D21 OH	HGM	-	141,188	133,438	-	-	-	-	-	-	-	-	-	43,635	230,991
PR H0000670 Kan15 OH	HGX	-	-	228,752	67,301	-	-	-	-	-	-	-	-	32,287	263,765
PR H0000697 Kan16 OH	HGX	-	-	-	350,781	13,432	-	-	-	-	-	-	-	68,139	296,074
PR H0000699 Wma f.tank	HGT	-	-	-	-	-	-	-	30,000	-	30,000	(20,000)	10,000	514	(514)
PR H0000775 Wma13 OH	HGX	-	-	192,852	124,976	-	-	-	-	-	-	-	-	33,795	284,033
PR H0000778 Kea22 Ovhl	HGK	-	-	0	337,487	-	-	-	-	-	-	-	-	41,870	295,617
PR H0001005 Wma14 Ovhl	HGX	-	-	-	-	219,421	55,002	-	-	-	-	-	-	46,126	228,297
PR H0001110 Kea23 Ovhl	HGK	-	-	-	-	77,780	216,591	-	-	-	-	-	-	62,741	231,630
PR H0001218 Swing Engine	HGX	-	-	-	-	-	164,250	37,470	-	-	-	350,000	350,000	28,583	193,137
PR H0001247 Wma12 OH	HGX	-	-	-	-	-	372,751	4	-	-	-	-	-	74,101	298,654
		-	141,188	555,041	880,546	310,633	828,594	37,475	30,000	-	30,000	330,000	360,000	431,792	2,321,685
Disb Gen Diesels															
Disb Gen Unit Overhaul	HGX	-	-	-	-	-	-	-	-	-	-	150,000	150,000	-	-
		-	-	-	-	-	-	-	-	-	-	150,000	150,000	-	-
Hydros															
PR H0001467 PuueoPen	HGT	-	-	-	-	-	-	4,125	-	200,000	200,000	-	200,000	1,152	2,973
PR H0001468 WaiauPen	HGT	-	-	-	-	-	-	1,196	-	150,000	150,000	-	150,000	768	428
		-	-	-	-	-	-	5,320	-	350,000	350,000	-	350,000	1,919	3,401
Admin Building and Other															
PR H0000173 Struct Imp	HGM	677	-	-	-	-	-	-	-	-	-	-	-	-	677
PR H0000698 Pred Maint	HGA	-	-	-	1,455	9,584	9,759	-	62,500	18,000	80,500	-	80,500	-	20,798
		677	-	-	1,455	9,584	9,759	-	62,500	18,000	80,500	-	80,500	-	21,475
Total O&M Projects		1,420,627	2,674,794	2,505,943	4,496,415	3,162,349	4,973,399	2,222,066	6,390,597	(149,400)	6,241,197	156,000	6,397,197	3,239,399	18,216,194
		CA-IR-254.a	CA-IR-254.a	CA-IR-254.a	CA-IR-254.a	CA-IR-254.a	CA-IR-254.a	CA-IR-254.b	CA-IR-254.c	WP-510 p2	CA-IR-254.d	WP-510 p3	CA-IR-254.d	CA-IR-254.f	CA-IR-254.f

Project#	Description	Expense Element	(A) 2006 Adjusted Budget (Actuals thru August)	2007 Budget	(B) 2006 Adjusted Budget (WP-510 page 8)	(A)-(B) Variance		(C) Adjusted 2006 Budget with oncosts
H0001218	Dsl Swing Engine - 2006 - 2005	Labor	23,152	-				
		Materials	10,258	-				
		Overhead	14,586	-				
H0001218 Total			47,996	-	-	47,996	(1)	-
H0001395	CT3 General Inspection 2006	Labor	28,007	-				
		Materials	26,848	-				
		Overhead	4,382	-				
		Outside Services	13,000	-				
H0001395 Total			72,237	-	58,000	14,237	(2)	73,524
H0001396	CT1 Gen Insp 2006	Labor	22,380	-				
		Materials	16,783	-				
		Overhead	1,072	-				
		Outside Services	8,000	-				
H0001396 Total			48,234	-	43,000	5,234	(3)	57,339
H0001397	CT2 Major Field Insp 2006	Labor	80,951	-				
		Materials	1,445,736	-				
		Overhead	3,365	-				
		Outside Services	253,426	-				
H0001397 Total			1,783,479	-	2,000,000	(216,521)	(4)	1,446,227
H0001398	CT4 Hot Section 2006	Labor	4,233	-				
		Materials	963,773	-				
		Overhead	2,258	-				
		Outside Services	9,020	-				
H0001398 Total			979,284	-	844,000	135,284	(5)	908,232
H0001399	Hill 5 Blr Insp 2006	Labor	70,966	-				
		Materials	100,996	-				
		Overhead	37,058	-				
		Outside Services	169,676	-				
H0001399 Total			378,696	-	413,000	(34,304)	(6)	471,445
H0001400	Puna Blr Insp 2006	Labor	94,435	-				
		Materials	169,164	-				
		Overhead	5,553	-				
		Outside Services	91,989	-				
H0001400 Total			361,141	-	334,000	27,141	(7)	403,012
H0001401	CT5 Gen Inspection 2006	Labor	7,859	-				
		Materials	15,703	-				
		Overhead	4,097	-				
H0001401 Total			27,658	-	55,000	(27,342)	(8)	100,720
H0001402	Hill 6 Blr Insp 2006	Labor	148,229	-				
		Materials	98,996	-				
		Overhead	78,674	-				
		Outside Services	319,660	-				
H0001402 Total			645,559	-	412,000	233,559	(9)	767,326
H0001403	Shp 3 Blr Insp - 2006	Labor	88,906	-				
		Materials	75,808	-				
		Overhead	2,629	-				
		Outside Services	529,954	-				
H0001403 Total			697,296	-	229,000	468,296	(10)	286,636
H0001404	Shp 4 Blr Insp - 2006	Labor	84,207	-				
		Materials	75,788	-				
		Outside Services	429,654	-				
H0001404 Total			589,649	-	229,000	360,649	(11)	286,636
KKlein01	Puna Blr Insp-Turb Major 2007	Labor	-	89,472				
		Materials	-	163,500				
		Outside Services	-	288,654				
KKlein01 Total			-	541,626				
KKlein02	S3 Blr Insp 2007	Labor	-	89,472				
		Materials	-	176,500				
		Outside Services	-	79,654				
KKlein02 Total			-	345,626				
KKlein03	S4 Blr Insp 2007	Labor	-	89,472				
		Materials	-	176,500				
		Outside Services	-	79,654				
KKlein03 Total			-	345,626				
KKlein04	H5 Blr Insp 2007	Labor	-	94,442				

Hawaii Electric Light Company, Inc.

2006 TEST YEAR
2006 - 2007 Overhaul Costs (Updated as of 08/2006)

Project#	Description	Expense Element	(A) 2006 Adjusted Budget (Actuals thru August)	2007 Budget	(B) 2006 Adjusted Budget (WP-510 page 8)	(A)-(B) Variance	(C) Adjusted 2006 Budget with oncosts
KKlein04	H5 Blr Insp 2007	Materials	-	115,500			
		Outside Services	-	168,154			
KKlein04 Total			-	378,096			
KKlein05	H6 Blr Insp 2007	Labor	-	94,442			
		Materials	-	115,500			
		Outside Services	-	168,154			
KKlein05 Total			-	378,096			
KKlein06	CT1 Gen Insp 2007	Labor	-	22,040			
		Materials	-	15,000			
		Outside Services	-	8,000			
KKlein06 Total			-	45,040			
KKlein07	CT2 Gen Insp 2007	Labor	-	25,897			
		Materials	-	950,000			
		Outside Services	-	651,000			
KKlein07 Total			-	1,626,897			
KKlein08	CT3 Hot Section 2007	Labor	-	22,040			
		Materials	-	322,000			
		Outside Services	-	556,499			
KKlein08 Total			-	900,539			
KKlein09	CT5 Gen Insp 2007	Labor	-	25,897			
		Materials	-	22,000			
		Outside Services	-	8,000			
KKlein09 Total			-	55,897			
KKlein10	CT4 Gen Insp 2007	Labor	-	25,897			
		Materials	-	22,000			
		Outside Services	-	8,000			
KKlein10 Total			-	55,897			
Grand Total			$ 5,631,231	$ 4,673,338	$ 4,617,000	$ 1,014,231	$ 4,801,097

Explanations for Variance column:

(1) Diesel swing engine overhaul started in late 2005, and was unbudgeted in 2006. Costs for 2006 were unknown at budget preparation time.

(2) CT-3 additional costs incurred on structural maintenance and painting.

(3) CT-1 variance is negligible.

(4) CT-2 material costs were moved from 2006 to 2007 due to their long lead time (i.e., purchase to delivery).

(5) CT-4 Hot Section actual contractor costs were higher than originally budgeted.

(6) Hill 5 variance is due to downgrade in scope and shorter timing allowed.

(7) Puna overhaul is yet to occur. Variance is due to overhead rate change.

(8) CT-5 was overbudgeted. This was only the second inspection since commissioning.

(9) Hill 6 was underbudgeted. The overhaul was done with a major scope of work.

(10) Shipman 3 variance is due to the non-budgeting of asbestos abatement ("ACM") work being done to prepare for boiler tube replacement.

(11) Shipman 4 variance is due to the non-budgeting of asbestos abatement ("ACM") work being done to prepare for boiler tube replacement.

CA-IR-255

Ref: HELCO WP-510, page 8; 2006 Overhaul Schedule Test Year Normalized.

For each of the listed outages, please provide the following information:

a. For completed outages, the actual dates the outage was started and completed and the number of weeks duration.

b. For work not yet completed, provide the Company's current planned start date, completion date and outage duration.

c. For completed outages, provide the actual incurred expense amount.

d. Explain why the actual incurred cost amounts provided in response to part (c) of this information request departed from the "normalized" and the "adjusted" amounts shown on the workpaper.

e. For line items associated with overhaul work not yet completed, provide and explain any revisions that are needed to the line item dates, number of weeks, normalized costs, adjusted cost or "reason" to reflect most current available information.

HELCO Response:

a. Refer to Attachment 1 Overhaul Schedule (Revision #6) for completed outages as of September 1, 2006. The actual dates each outage was started, completed and the number of weeks or days of duration are shown, along with a brief description of the work performed. The HELCO overhauls in the schedule include:

1. Hill 5, May 8 – 28
2. Keahole CT-4, June 15 – 21
3. Keahole CT-5, June 27 – 30
4. Hill 6, July 8 – August 10
5. Puna CT-3, August 29 – September 5
6. Shipman 3, September 4 – October 1

7. Kanoelehua CT-1, September 6 – 17
8. Keahole CT-2, September 18 – October 29
9. Shipman 4, October 2 - 29
10. Puna Steam, November 6 – December 10

The diesel swing engine overhaul being performed is not shown on the overhaul schedule. The overhaul schedule is intended to show plants that are impacted by being taken out of service for an overhaul, maintenance outage or forced outage period. The swing engine overhaul had no such impact. When an installed diesel engine is scheduled to be overhauled, there is a 2 week period at the beginning and another 2 week period at the end of the overhaul period to accommodate swapping the swing engine in and back out while the assigned engine is removed and replaced for the overhaul work. The unit is unavailable for operation during these 2 week intervals.

b. Refer to Attachment 1 Overhaul Schedule (Revision #6) for work not yet completed as of September 1, 2006. The Company's current planned start date, completion date and outage duration are shown.

c. For completed overhauls, the actual incurred expense amount is included in Attachment 2.

d. The actual incurred cost amounts provided in response to part (c) of this information request can be compared to the "adjusted budget" amounts shown in Attachment 2 to CA-IR-254. (By definition, actuals are not expected to be the same as expenses after normalizations adjustments are made.) Attachment 2 provides the information that is in Attachment 1 to the response to CA-IR-254 for overhauls only (rather than for all projects). Attachment 2, CA-IR-255, column H is information which has been grossed up for oncosts and overheads. Costs have historically taken months to come in for overhauls, especially from outside

contractors. At this point, the actual costs that have been incurred together with the outstanding commitments (costs which have been incurred but not paid yet) are in line with what was budgeted. Outstanding commitments as of July 31, 2006 are as follows:

Unit Overhaul	Committed Amount as of 7/31/06
CT-2 Major Field Inspection	$12,350
CT-4 Hot Section	$51,922
Hill 5 Boiler Inspection	$109,641
Puna Boiler Inspection	$29,028
Hill 6 Boiler Inspection	$373,957

e. The schedules for the remaining overhauls are shown in Attachment 1. No further revisions to the cost estimates are needed. Overhaul work not yet completed, and not noted as a line item on Attachment 1 include the diesel engine overhaul and the disbursed engine unit overhaul.

The diesel engine unit overhaul was normalized in at $350,000 (refer to HELCO-WP-510) and will occur once every other year at that cost. As seen on Attachment 1, an overhaul is being performed on the diesel swing engine. We are proposing a ($155,000) adjustment to 2006 maintenance non-labor.

The disbursed unit overhaul was normalized in at $150,000 (refer to HELCO-WP-510) and will occur as hours accumulate (refer to CA-IR-256). We are proposing a ($75,000) adjustment to 2006 maintenance non-labor.

HELCO
2006 OVERHAUL SCHEDULE
Revised 9/01/06. Actuals through 9/01/06. Rev. 6

UNIT	Date	WEEKS	DESCRIPTION
Shipman 3	Dec 30 - Jan 3	5 days	F.O., Ignitor problems
Shipman 3	Jan 8 - 11	4 days	F.O., tube leak
HEP ST	Jan 9 - 10	2 days	M.O. - vibration problem
HEP ST	Jan 10 - 16	1	F.O. - hydraulic governor repair
Shipman 3	Jan 18 - 22	5 days	F.O. - tube leak
HEP CT1	Jan 20 - 26	6 days	M.O. Hot section, new combustor
Shipman 4	Jan 28 - Feb 1	5 days	F.O., tube leak
HEP CT1	Feb 3 - 6	4 days	F.O., made available for emergencies
Shipman 3	Feb 8 - 9	2 days	F.O. Turbine Throttle Valve Leak
Hill 5	Feb 8 - 13	5 days	M.O., boiler wash/ air ejector repair
Hill 6	Feb 15 - 25	11 days	M.O. Turbine bearing inspection, sootblower
Puna Steam	Feb 28 - Mar 4	5 days	M.O., boiler wash,misc. offline repairs
Shipman 3	Mar 2 - 4	3 days	F.O. Tube Leak
HEP CT1	Mar 14 - 16	3 days	M.O. Install Lease Engine
HEP CT2	Mar 20 - 23	4 days	M. O. HRSG Leak Repair
Diesel 15	Mar 27 - 30	4 days	M.O. Radiator repair
CT2	Apr 3 - 7	5 days	M.O. Inspection, CEMS replacement
Diesel 16	Apr 4 - 6	3 days	M.O. Turbo charger replacement
Hill 6	Apr 4 - 6	3 days	F.O. Tube Leak Repair
Hill 6	Apr 7 - 9	3 days	F.O. Floor Tube Leak Repair
Shipman 4	Apr 14 - 22	9 days	M.O. CD pump and BFP pump repairs
PGV	Apr 24 - 30	1	Semi-annual maintenance
Shipman 4	Apr 28 - 30	3 days	F.O. Boiler Tube Leak Repair
CT3	Apr 27 - May 4	1	F.O. Excitation System Ground Repaired
1, Hill Unit No. 5	May 8 - May 28	3	Boiler Wash & Inspection
Shipman 3	May 19 - 24	6 days	F.O. Boiler Tube Leak Repair
HEP Steam Turbine	May 20 - 23	3 days	F.O. Steam Turbine Coupling Repair
Kanoelehua 15, 16	May 22 - Jun 3	12 days	F.O., Battery Bank Repair
Kanoelehua 17	May 22 - Jun 18	4	F.O. Battery Bank/Charging System
Shipman 4	May 24 - Jun 7	12 days	F.O. Boiler Tube Leak Repair
HEP CT2	May 21 - 25	5 days	F.O. HRSG Tube Leak Repair, Trb. Fan
Puna Steam	May 29 - Jun 2	5 days	M.O., Miscellaneous offline repairs, hopper
Hill 5	Jun 7 - 9	3 days	F.O. Turbine Vibration
Hill 6	Jun 7 - 9	3 days	F.O. Tube Leak Repairs
Shipman 3	Jun 13 - 15	3 days	F.O. Tube Leak Repairs
2. Keahole CT-4	Jun 15 - 21	1	Hot Section, General Inspection
HEP CT-3	Jun 25 - 26	2 days	F.O. HRSG leak and bypass valve repairs
3. Keahole CT-5	Jun 27 - 30	4 days	General Inspection
Shipman 3	Jul 3 - 5	3 days	F.O. Tube Leak Repairs
4, Hill Unit No. 6	Jul 8 - Aug 10	4 weeks 5 days	Boiler Chemical Clean, Boiler Assessment, Condenser Retube, H2 Modifications
Shipman 4	Jul 13 - 16	4 days	F.O. Tube Leak Repair
HEP Steam	Aug 10 - 12	3 days	F.O. Coupling Repair
HEP CT1, CT2	Aug 13 - 22	8 days	CT1 Reinstall, CT2 Annual (Hot Section)
Puna Steam	Aug 24 -29	6 days	M.O. Boiler/APH/Hopper Wash
Shipman 3	Aug 26 - 31	6 days	F.O. Tube Leak Repairs
5, Puna CT-3	Aug 29 - Sep 5	2	General Inspection
6, Shipman 3	Sep 4 - Oct 1	4	Boiler Insp., BFW Pumps
7. Kanoelehua CT-1	Sep 6 -17	2	Gen. Insp., Low Smoke Nozzles & Ignitors
8. Keahole CT-2	Sep 18 - Oct 29	6	Governor Control, MFI, Generator Inspection
9. Shipman 4	Oct 2 - 29	4	Boiler Insp, BFW Pumps, Exciter
PGV*	Oct 30 - Nov 5	1	Maintenance
10. Puna Steam	Nov 6 - Dec10	5	Boiler Inspection, Turbine Inspection
Hill 5**	Dec 11-17	1	Cable Replacement, Gas Leak Repair

*Note: PGV derated to between 14 to 24 MW from July 17 thru October 23
**May be scheduled earlier dependent on available PGV output

Norman Lee Bauer

Hawaii Electric Light Company Inc.

2006 TEST YEAR

2000 - 2006 O&M History - Overhauls

Source: Essbase D_HG0 Generation, Ellipse on 08/29/06

Description	RA	A YearTotal 2000_Actual	B YearTotal 2001_Actual	C YearTotal 2002_Actual	D YearTotal 2003_Actual	E YearTotal 2004_Actual	F YearTotal 2005_Actual	G (1/1/00 to 7/31/06) YearTotal 2006_Actual	H YearTotal Unadjusted 2006_Budget with Oncosts	I (Non-Labor) Adjustments	J Adjusted 2006_Budget with Oncosts	K (Non-Labor) Normalizations	L 2006 Normalized Test Year Estimate with Oncosts	M Actual 1/1/2000 to 7/31/2006 Labor	N = Sum(A to G) - M Non-Labor
Puna Steam Unit															
PR H0000042 PunaOvrhal	HGM	1,106	-	-	-	-	-	247	-	-	-	-	-	-	1,353
PR H0000170 Puna Ohaul	HGM	90,122	865	77	-	428	-	-	-	-	-	-	-	34,699	56,793
PR H0000356 Puna Turb Ovh	HGM	-	421,754	(5,916)	49,403	-	-	-	-	-	-	-	-	133,024	332,217
PR H0000601 P1Turb Ovh '0	HGM	-	-	396,793	-	-	-	-	-	-	-	-	-	67,225	329,568
PR H0000610 P1Insp'03	HGM	-	-	-	390,247	169,359	(24,008)	-	-	-	-	-	-	92,830	442,767
PR H0000696 PunaInsp04	HGM	-	-	-	-	363,925	28,162	-	-	-	-	-	-	112,088	280,000
PR H0001214 PunaInsp05	HGM	-	-	-	-	-	683,161	14,751	-	-	-	-	-	73,575	624,337
PR H0001400 PunaInsp06	HGM	-	-	-	-	-	-	8,547	403,012	-	403,012	-	403,012	1,186	7,361
		91,228	422,619	390,954	439,650	533,711	687,314	23,545	403,012	-	403,012	-	403,012	514,625	2,076,396
Shipman 3															
PR H0000034 S3Overhaul	HGM	-	-	-	-	149	-	-	-	-	-	-	-	149	0
PR H0000163 Shp3 Ohaul	HGM	147,208	7,954	-	-	-	-	-	-	-	-	-	-	38,958	116,205
PR H0000602 S3 Insp'02	HGM	-	-	26,666	55,948	-	-	-	-	-	-	-	-	2,909	79,705
PR H0000604 S3 Insp 03	HGM	-	-	-	492,086	72,397	-	-	-	-	-	-	-	105,337	459,147
PR H0000688 S3 Turb OH 04	HGM	-	-	-	-	641,972	70,133	-	-	-	-	-	-	130,310	581,795
PR H0001209 S3 Insp 05	HGM	-	-	-	-	-	135,967	3,454	-	-	-	-	-	39,832	99,588
PR H0001403 S3 Insp 06	HGM	-	-	-	-	-	-	8,308	286,636	-	286,636	42,000	328,636	-	8,308
		147,208	7,954	26,666	548,034	714,518	206,100	11,762	286,636	-	286,636	42,000	328,636	317,494	1,344,748
Shipman 4															
PR H0000035 S4Overhaul	HGM	-	-	-	-	-	-	2,439	-	-	-	-	-	2,439	(0)
PR H0000164 Shp4 Ohaul	HGM	152,609	-	-	-	-	-	-	-	-	-	-	-	38,350	114,260
PR H0000359 S4 Blrinsp	HGM	-	133	-	-	-	-	-	-	-	-	-	-	131	3
PR H0000603 S4 Insp'02	HGM	-	-	4,966	4,368	-	-	-	-	-	-	-	-	1,174	8,160
PR H0000605 S4 Turb OH '0	HGM	-	-	-	664,783	99,435	-	-	-	-	-	-	-	93,383	670,835
PR H0000689 S4 Inst 04	HGM	-	-	-	-	29,443	17,277	-	-	-	-	-	-	1,499	45,220
PR H0001210 S4 Insp 05	HGM	-	-	-	-	-	387,285	-	-	-	-	-	-	76,980	310,305
PR H0001404 S4 Insp 06	HGM	-	-	-	-	-	-	8,110	286,636	-	286,636	42,000	328,636	-	8,110
		152,609	133	4,966	669,151	128,877	404,561	10,548	286,636	-	286,636	42,000	328,636	213,955	1,156,892
Hill 5															
PR H0000036 H5Overhaul	HGM	1,373	-	-	-	-	-	-	-	-	-	-	-	-	1,373
PR H0000165 H5 Ohaul	HGM	233,372	402	-	-	-	-	-	-	-	-	-	-	75,326	158,448
PR H0000360 H5Ovhl2001	HGM	-	152,659	1,155	-	-	-	-	-	-	-	-	-	64,127	89,686
PR H0000597 H5 Turb OH '0	HGM	-	-	831,962	4,868	-	-	-	-	-	-	-	-	173,898	662,932
PR H0000606 H5 Insp '03	HGM	-	-	7,074	613,223	38,140	-	-	-	-	-	-	-	111,522	546,914
PR H0000690 H5 Insp 04	HGM	-	-	-	-	201,820	11,089	-	-	-	-	-	-	44,243	168,665
PR H0001211 H5 Insp 05	HGM	-	-	-	-	-	437,224	24,372	-	-	-	-	-	102,270	359,327
PR H0001399 H5 Insp 06	HGM	-	-	-	-	-	-	256,917	471,445	-	471,445	-	471,445	68,429	188,488
		234,745	153,061	840,191	618,091	239,960	448,313	281,290	471,445	-	471,445	-	471,445	639,817	2,175,834
Hill 6															
PR H0000166 H6 Ohaul	HGM	412,796	4,870	-	8,859	-	-	-	-	-	-	-	-	108,906	317,620
PR H0000362 H6 Blrinsp	HGM	-	130,636	-	-	-	-	-	-	-	-	-	-	45,029	85,607
PR H0000598 H6insp'02	HGM	-	-	477,134	3,614	-	-	-	-	-	-	-	-	142,352	338,397
PR H0000608 H6 Turb OH '0	HGM	-	-	2,735	820,779	156,398	-	-	-	-	-	-	-	120,887	859,024
PR H0000692 H6 Insp 04	HGM	-	-	-	-	334,745	45,491	-	-	-	-	-	-	71,603	308,634
PR H0001212 H6 Insp 05	HGM	-	-	-	-	-	325,343	194	-	-	-	-	-	68,396	257,141
PR H0001402 H6 Insp 06	HGM	-	-	-	-	-	-	213,760	767,326	-	767,326	230,000	997,326	95,540	118,219
		412,796	135,506	479,869	833,253	491,143	370,834	213,954	767,326	-	767,326	230,000	997,326	652,714	2,284,642

CA-IR-255
DOCKET NO. 05-0315
ATTACHMENT 2
PAGE 1 OF 4

Hawaii Electric Light Company Inc.			
2006 TEST YEAR			
2000 - 2006 O&M History - Overhaul			
Source: Essbase D_HG0 Generation, Ellips			
		O	P
			2006 Normalized
		Adjusted	Test Year
		2006_Budget	Estimate
Description	RA	without Oncosts	without Oncosts
Puna Steam Unit			
PR H0000042 PunaOvrhal	HGM		
PR H0000170 Puna Ohaul	HGM		
PR H0000356 Puna Turb Ovh	HGM		
PR H0000601 P1Turb Ovh '0	HGM		
PR H0000610 P1insp'03	HGM		
PR H0000696 Punainsp04	HGM		
PR H0001214 Punainsp05	HGM		
PR H0001400 Punainsp06	HGM	334,000	334,000
		334,000	334,000
Shipman 3			
PR H0000034 S3Overhaul	HGM		
PR H0000163 Shp3 Ohaul	HGM		
PR H0000602 S3 Insp'02	HGM		
PR H0000604 S3 insp 03	HGM		
PR H0000688 S3 Turb OH 04	HGM		
PR H0001209 S3 Insp 05	HGM		
PR H0001403 S3 Insp 06	HGM	229,000	271,000
		229,000	271,000
Shipman 4			
PR H0000035 S4Overhaul	HGM		
PR H0000164 Shp4 Ohaul	HGM		
PR H0000359 S4 Blrinsp	HGM		
PR H0000603 S4 Insp'02	HGM		
PR H0000605 S4 Turb OH '0	HGM		
PR H0000689 S4 Inst 04	HGM		
PR H0001210 S4 Insp 05	HGM		
PR H0001404 S4 Insp 06	HGM	229,000	271,000
		229,000	271,000
Hill 5			
PR H0000036 H5Overhaul	HGM		
PR H0000165 H5 Ohaul	HGM		
PR H0000360 H5Ovhl2001	HGM		
PR H0000597 H5 Turb OH '0	HGM		
PR H0000606 H5 Insp '03	HGM		
PR H0000690 H5 Insp 04	HGM		
PR H0001211 H5 Insp 05	HGM		
PR H0001399 H5 Insp 06	HGM	413,000	413,000
		413,000	413,000
Hill 6			
PR H0000166 H6 Ohaul	HGM		
PR H0000362 H6 Blrinsp	HGM		
PR H0000598 H6insp'02	HGM		
PR H0000608 H6 Turb OH '0	HGM		
PR H0000692 H6 Insp 04	HGM		
PR H0001212 H6 Insp 05	HGM		
PR H0001402 H6 Insp 06	HGM	412,000	642,000
		412,000	642,000

Hawaii Electric Light Company Inc.

2006 TEST YEAR

2000 - 2006 O&M History - Overhauls

Source: Essbase D HG0 Generation, Ellipse on 08/29/06

Description	RA	A YearTotal 2000_Actual	B YearTotal 2001_Actual	C YearTotal 2002_Actual	D YearTotal 2003_Actual	E YearTotal 2004_Actual	F YearTotal 2005_Actual	G (1/1/00 to 7/31/06) YearTotal 2006_Actual	H YearTotal Unadjusted 2006_Budget with Oncosts	I (Non-Labor) Adjustments	J Adjusted 2006_Budget with Oncosts	K (Non-Labor) Normalizations	L 2006 Normalized Test Year Estimate with Oncosts	M Actual 1/1/2000 to 7/31/2006 Labor	N = Sum(A to G) - M Non-Labor
CT-1															
PR H0000187 CT1 Insp	HGM	16,456	-	-	-	-	-	-	-	-	-	-	-	7,122	9,334
PR H0000355 CT1GenInsp	HGM	-	59	-	-	-	-	-	-	-	-	-	-	59	0
PR H0000671 CT1 rewind	HGX	-	-	351,124	111,607	4,144	-	-	-	-	-	-	-	31,266	435,608
PR H0001216 CT1 Insp05	HGX	-	-	-	-	-	131,280	-	-	-	-	-	-	34,373	96,907
PR H0001398 CT1 Insp06	HGX	-	-	-	-	-	-	1,834	57,339	-	57,339	-	57,339	31	1,804
		16,456	59	351,124	111,607	4,144	131,280	1,834	57,339	-	57,339	-	57,339	72,850	543,653
CT-2															
PR H0000041 CT2Ovrhaul	HGM	13,273	-	-	-	-	-	-	-	-	-	-	-	-	13,273
PR H0000188 CT2 Insp	HGM	100,618	21,973	9,453	-	-	-	-	-	-	-	-	-	30,159	101,884
PR H0000600 CT2Insp'02	HGM	-	-	2,300	5,835	-	-	-	-	-	-	-	-	418	7,517
PR H0000609 CT2Insp'03	HGM	-	-	-	123,737	-	-	-	-	-	-	-	-	29,461	94,276
PR H0000695 CT2 Insp04	HGK	-	-	-	-	159,755	-	-	-	-	-	-	-	12,993	146,761
PR H0001215 CT2 Insp05	HGK	-	-	-	-	-	1,090,863	433,254	-	-	-	-	-	51,451	1,472,667
PR H0001397 CT2 MFI06	HGK	-	-	-	-	-	-	11,090	2,146,227	(700,000)	1,446,227	(700,000)	746,227	6,459	4,631
		113,892	21,973	11,753	129,371	159,755	1,090,863	444,345	2,146,227	(700,000)	1,446,227	(700,000)	746,227	130,942	1,841,009
CT-3															
PR H0000189 CT3 Insp	HGM	248,800	42	-	538	-	-	-	-	-	-	-	-	30,159	219,221
PR H0000037 CT3Ovrhaul	HGM	1,526	-	-	-	-	-	-	-	-	-	-	-	1,526	(0)
PR H0000599 CT3 HS '02	HGM	-	-	670	-	-	-	-	-	-	-	-	-	670	0
PR H0000607 CT3insp'03	HGM	-	-	556	46,928	1,190	-	-	-	-	-	-	-	13,965	34,709
PR H0000691 CT3 Insp04	HGX	-	-	-	-	8,897	43,055	-	-	-	-	-	-	-	51,952
PR H0001213 CT3 Insp05	HGX	-	-	-	-	-	163,095	55,426	-	-	-	-	-	28,445	190,077
PR H0001395 CT3 Insp06	HGX	-	-	-	-	-	-	1,281	73,524	-	73,524	-	73,524	618	663
		250,325	42	1,226	47,466	10,087	206,150	56,707	73,524	-	73,524	-	73,524	75,383	496,621
CT-4															
PR H0000039 CT4Ovrhaul	HGM	-	-	-	-	-	159,532	-	-	-	-	-	-	12,451	147,081
PR H0001398 CT4 Gen06	HGK	-	-	-	-	-	-	901,749	63,232	845,000	908,232	-	908,232	3,948	897,801
		-	-	-	-	-	159,532	901,749	63,232	845,000	908,232	-	908,232	16,399	1,044,882
CT-5															
PR H0000040 CT5Ovrhaul	HGM	-	-	-	-	-	21,050	-	-	-	-	-	-	1,922	19,128
PR H0001401 CT5 Hot06	HGK	-	-	-	-	-	-	27,142	1,505,720	(1,405,000)	100,720	-	100,720	7,342	19,800
		-	-	-	-	-	21,050	27,142	1,505,720	(1,405,000)	100,720	-	100,720	9,264	38,928
Diesels															
PR H0000357 Kea D21 OH	HGM	-	141,168	133,438	-	-	-	-	-	-	-	-	-	43,635	230,991
PR H0000670 Kam15 OH	HGX	-	-	228,752	67,301	-	-	-	-	-	-	-	-	32,287	263,765
PR H0000697 Kam16 OH	HGX	-	-	-	350,781	13,432	-	-	-	-	-	-	-	68,139	296,074
PR H0000775 Wma13 OH	HGX	-	-	192,852	124,976	-	-	-	-	-	-	-	-	33,795	284,033
PR H0000778 Kea22 Ovhl	HGK	-	-	0	337,487	-	-	-	-	-	-	-	-	41,870	295,617
PR H0001005 Wma14 Ovhl	HGX	-	-	-	-	219,421	55,002	-	-	-	-	-	-	48,126	226,297
PR H0001110 Kea23 Ovhl	HGK	-	-	-	-	77,760	216,591	-	-	-	-	-	-	62,741	231,630
PR H0001218 Swing Engine	HGX	-	-	-	-	-	184,250	37,470	-	-	-	350,000	350,000	28,583	193,137
PR H0001247 Wma12 OH	HGX	-	-	-	-	-	372,751	4	-	-	-	-	-	74,101	298,654
		-	141,168	555,041	880,546	310,633	828,594	37,475	-	-	-	350,000	350,000	431,278	2,322,199
Disb Gen Diesels															
Disb Gen Unit Overhaul	HGX	-	-	-	-	-	-	-	-	-	-	150,000	150,000	-	-
		-	-	-	-	-	-	-	-	-	-	150,000	150,000	-	-
Total Overhauls		1,419,259	882,636	2,661,790	4,277,169	2,592,828	4,554,592	2,010,351	6,061,097	(1,260,000)	4,801,097	114,000	4,915,097	3,074,721	15,323,804

CA-IR-255
DOCKET NO. 05-0315
ATTACHMENT 2
PAGE 3 OF 4

Hawaii Electric Light Company Inc.

2006 TEST YEAR

2000 - 2006 O&M History - Overhaul

Source: Essbase D_HG0 Generation, Ellip

Description	RA	O Adjusted 2006_Budget without Oncosts	P 2006 Normalized Test Year Estimate without Oncosts
CT-1			
PR H0000187 CT1 Insp	HGM		
PR H0000355 CT1GenInsp	HGM		
PR H0000671 CT1 rewind	HGX		
PR H0001216 CT1 Insp05	HGX		
PR H0001396 CT1 Insp06	HGX	43,000	43,000
		43,000	43,000
CT-2			
PR H0000041 CT2Ovrhaul	HGM		
PR H0000188 CT2 Insp	HGM		
PR H0000600 CT2Insp'02	HGM		
PR H0000609 CT2insp'03	HGM		
PR H0000695 CT2 Insp04	HGK		
PR H0001215 CT2 Insp05	HGK		
PR H0001397 CT2 MFI06	HGK	2,000,000	1,300,000
		2,000,000	1,300,000
CT-3			
PR H0000189 CT3 Insp	HGM		
PR H0000037 CT3Ovrhaul	HGM		
PR H0000599 CT3 HS '02	HGM		
PR H0000607 CT3insp'03	HGM		
PR H0000691 CT3 Insp04	HGX		
PR H0001213 CT3 Insp05	HGX		
PR H0001395 CT3 Insp06	HGX	58,000	58,000
		58,000	58,000
CT-4			
PR H0000039 CT4Ovrhaul	HGM		
PR H0001398 CT4 Gen06	HGK	844,000	55,000
		844,000	55,000
CT-5			
PR H0000040 CT5Ovrhaul	HGM		
PR H0001401 CT5 Hot06	HGK	55,000	844,000
		55,000	844,000
Diesels			
PR H0000357 Kea D21 OH	HGM		
PR H0000670 Kan15 OH	HGX		
PR H0000697 Kan16 OH	HGX		
PR H0000775 Wma13 OH	HGX		
PR H0000778 Kea22 Ovhl	HGK		
PR H0001005 Wma14 Ovhl	HGX		
PR H0001110 Kea23 Ovhl	HGK		
PR H0001218 Swing Engine	HGX		
PR H0001247 Wma12 OH	HGX	-	350,000
		-	350,000
Disb Gen Diesels			
Disb Gen Unit Overhaul	HGX	-	150,000
		-	150,000
Total Overhauls		4,617,000	4,731,000

CA-IR-256

Ref: HELCO T-5, page 59, line 3; disbursed generation overhaul.

According to the testimony, "one disbursed generation unit overhaul will be performed every four years." Please indicate the dates and times of each such overhaul and the amounts spent performing the overhaul on each unit in each of the past five years (i.e., 2001 through 2005).

HELCO Response:

The disbursed generation units have never been overhauled. However, major unit inspections are recommended by the manufacturer (refer to Attachment 1[1]) for every 2 years or 6000 running hour intervals. Overhaul scheduling for the Cummins diesels are based on an analysis of the unit's condition. The table below shows the current run time hours accumulated by the four dispersed diesels by year since installation.

	PANAEWA D-24	OULI D-25	PUNALUU D-26	KAPUA D-27
1998	85:49	96:41	82:01	72:21
1999	134:29	151:29	141:11	114:36
2000	262:52	266:40	205:12	208:26
2001	146:14	1:58	95:10	108:23
2002	318:32	293:38	257:01	283:06
2003	83:18	87:57	107:50	71:10
2004	34:04	47:24	40:44	47:04
2005	29:19	28:32	26:11	30:05
2006	14:04	15:22	14:01	15:16
TOTAL	1108:41	989:41	969:21	950:27

CUMULATIVE TOTAL 4018:10

[1] Note: The information provided is copyrighted. The copies are being provided under the "fair use" exception to the copyright laws. Any copies made of the requested information are subject to the copyright laws.

It is anticipated that based on the current operation of the dispersed diesel generators as quick load recovery units after an under frequency load shedding event and in accordance with manufacturer recommendations that major inspections will be based on time, rather than run hours. (A major inspection discussed here is similar to a "complete tear-down and related type of overhaul" as stated in response to CA-IR-259.) Run durations are minimized due to limited (1600 gallons) fuel storage capacity at each site. Whenever a unit requires refueling, a tanker truck is dispatched to each respective site.

As a result, HELCO's current view is that a more "normal" cycle for overhauling the disbursed diesels will be one unit every two years, thus an adjustment of ($75,000) is being proposed reducing the disbursed generating unit overhaul expense from $150,000 to $75,000 for the test year.

By the nature of the units' locations at remote (with the exception of D-24) substations, each unit requires a drive of more than an hour to gain access. If, while performing maintenance on the unit, the mechanic or technician discovers that certain parts or other items are needed, a return trip will be necessary. The units are kept in operational condition through regular inspection visits by the CT&D maintenance crews, that are dispatched to respond to known operational problems as well as scheduled visits. This awareness of operational problems comes from a comprehensive SCADA interface with each unit which includes several dozen points, far greater than any other unit that is connected to SCADA.

Disbursed generation unit overhauls were budgeted in 2005 and 2006, but with the existing unit run hours at approximately 1000 hours each, work of this magnitude was not performed in 2005 and will not be performed this year. This level of usage does not warrant a complete tear-down and rebuild overhaul.

Section 7 - Maintenance Procedures Every 6,000 Hours or 2 Years

Section Contents

Page

Air Compressor 7-23
Air Compressor Discharge-Checking 7-23
Air Compressor Intake-Checking 7-24
Checking 7-23

Cooling System 7-15
Cleaning System and Changing Antifreeze 7-15

Engine Protection System 7-29
Calibration 7-29

Fan Hub 7-17
Inspection 7-17

Fan Idler Pulley Assembly 7-18
Installation 7-18
Rebuild 7-18
Rebuild/Replacement 7-18

Fuel Pump 7-2
Calibration 7-4
Checking 7-4
Installation 7-5
Removal 7-2

General Information 7-2

Injectors 7-9
Calibration 7-12
Checking 7-11
Installation 7-12
Removal 7-9

Thermostats and Seals 7-19
Replacement 7-19

Throttle Travel/Throttle Air Cylinder 7-6
Checking 7-6
Variable Speed (VS) Throttle Linkage Adjustment 7-6

Turbocharger 7-21
Inspection 7-21

Vibration Damper 7-28
Checking 7-28
Damper Leakage Detection 7-29
Thickness Measurement 7-28

Water Pump 7-19
Rebuild/Replacement 7-19

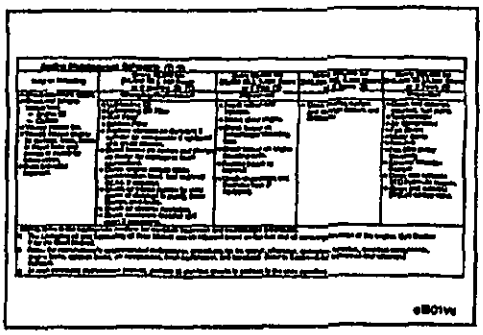

General Information

All checks or inspections listed under the previous maintenance intervals must also be performed at this time in addition to those listed under this maintenance interval.

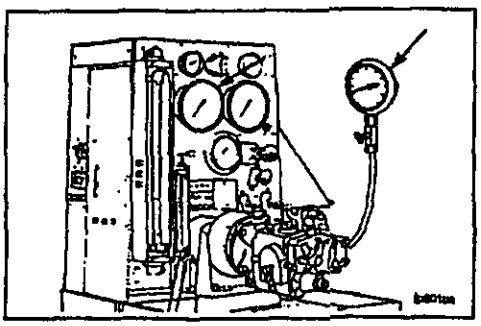

Fuel Pump

Every 6,000 Hours or 2 years clean and calibrate the fuel pump.

Refer to Calibration in this section for calibration information.

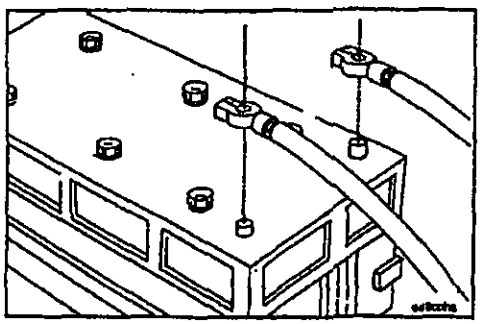

Removal

Disconnect the (-) negative battery cable first, then disconnect the (+) positive cable.

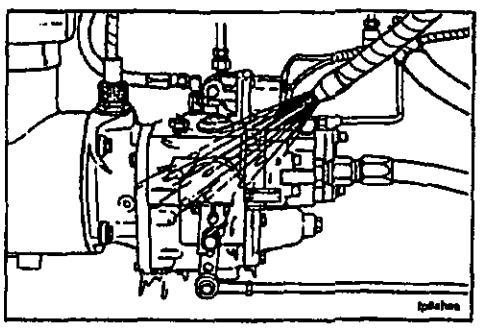

Clean the fuel pump and the surrounding area before removing it from the engine.

Disconnect the wires to the fuel shutoff valves.

Disconnect the linkage from the throttle lever.

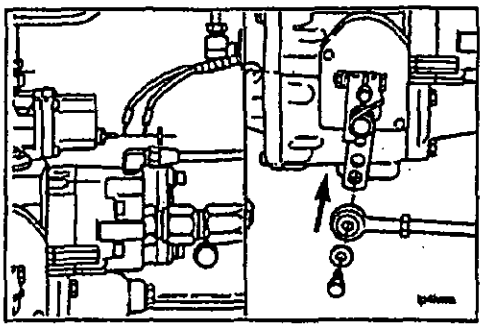

On engines with the throttle air cylinders mounted on a bracket on the fuel pump, remove the throttle cylinder air inlet (2), the braking cylinder air inlet (3), the vent line (4) and bracket mounting capscrews (5).

The throttle cylinder assembly is removed with the fuel pump as a unit.

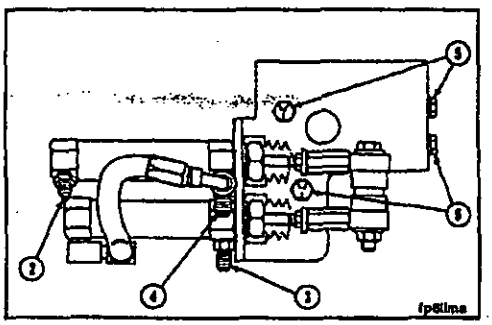

The newer engines will have the air throttle cylinders mounted to the cam follower covers. Inspect the throttle cylinders for shaft wear and seal leakage. If there is significant wear or leakage, refer to the K38 and K50 Shop Manual, Bulletin No. 3810304, or contact your Cummins Distributor for repair.

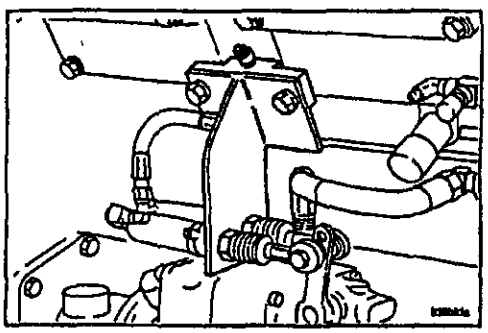

Disconnect the fuel tubing and air hose.

- Gear pump cooling drain (2)
- Gear pump suction line (3)
- AFC fuel drain (4)
- Fuel supply to injectors (5)
- AFC air hose (6)
- Tachometer cable (7)

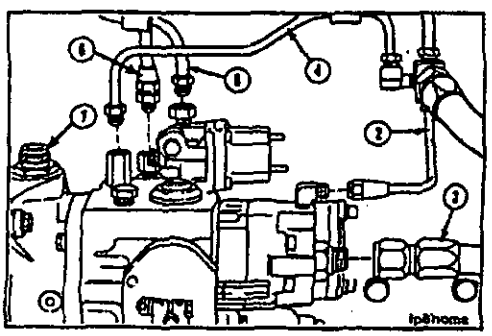

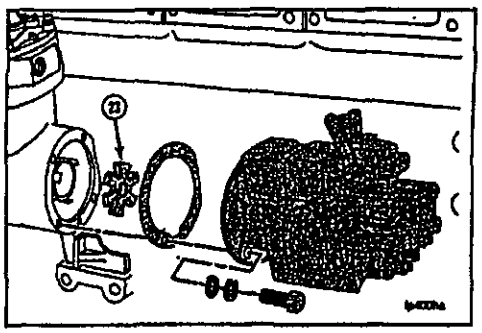

Remove the four mounting capscrews and the fuel pump. Remove the drive coupling (23). Remove and discard the *gasket.*

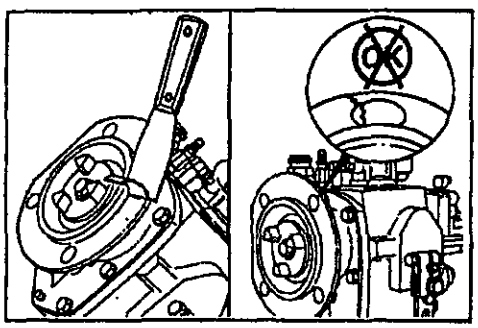

Checking

Clean the fuel pump and the air compressor or accessory drive mounting surfaces.

Inspect the mounting surfaces for damage. Replace if cracked or distorted.

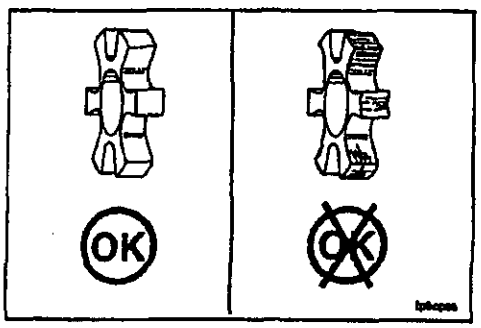

Visually inspect the spider coupling for damage. Replace if cracked or distorted.

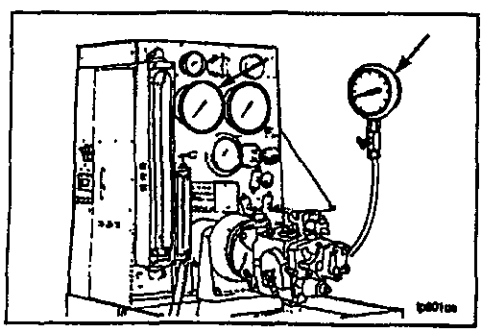

Calibration

Calibrate the fuel pump. The procedure **must** be done at a Cummins Authorized Repair location. Refer to the PT Fuel Pump Rebuild and Calibrate Manual, Bulletin No. 3379084.

Installation

All K38 and K50 engines use a white nylon or light green fuel pump drive coupling.

Install the drive coupling (23), gasket, fuel pump, and four capscrews. Tighten the capscrews to 45 N•m [35 ft-lb].

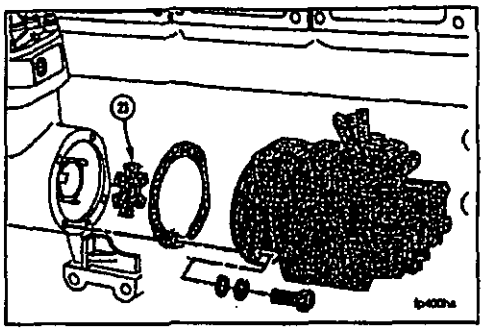

Connect the fuel tubing and air hose.

- Fuel drain (1)
- Gear pump cooling drain (2)
- AFC air hose (4)
- Fuel supply to injectors (5)
- AFC fuel drain (6)
- Tachometer cable (7)

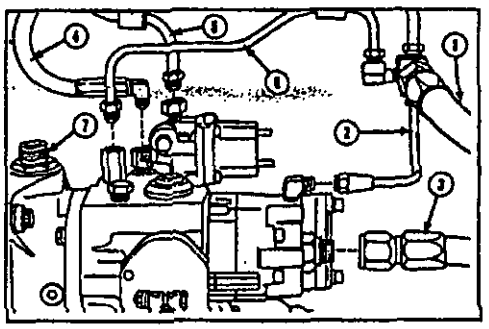

On engines equipped with throttle air cylinders mounted on a bracket on the fuel pump:

Install the bracket mounting capscrew (5).

Install throttle cylinder (2) and brake cylinder (3) air lines.

Install vent line (4).

Refer to Throttle Travel/Throttle Air Cylinder in this section for more information.

The newer engines will have the air throttle cylinders mounted to the cam follower covers.

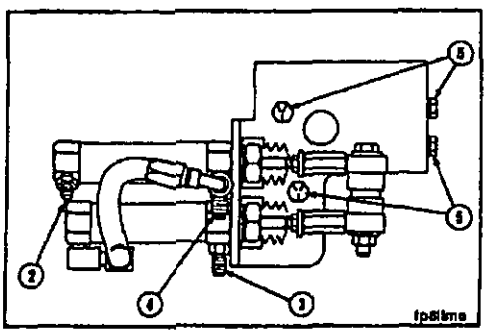

Connect the electric wires to the fuel shutoff valve.

NOTE: The wire connection nut and the ground post nut must be clean and tight.

Install the linkage to the throttle lever.

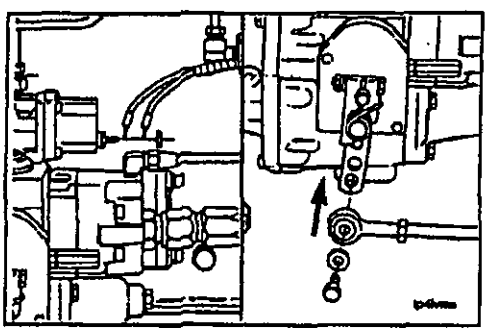

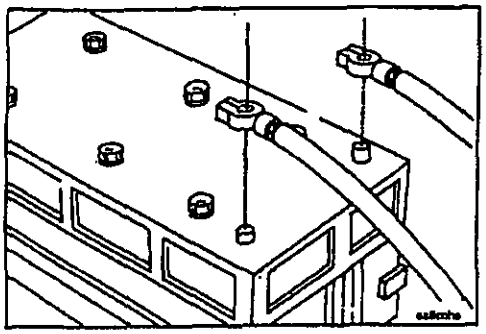

Connect the (+) positive battery cable first, then connect the (-) negative cable.

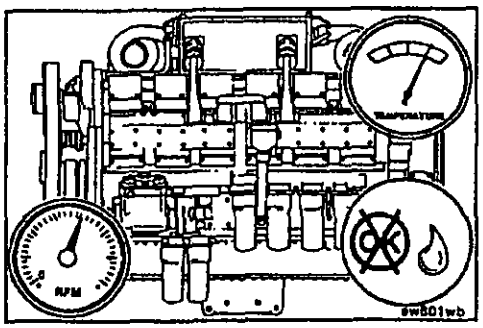

Operate the engine to normal operating temperature and check for leaks.

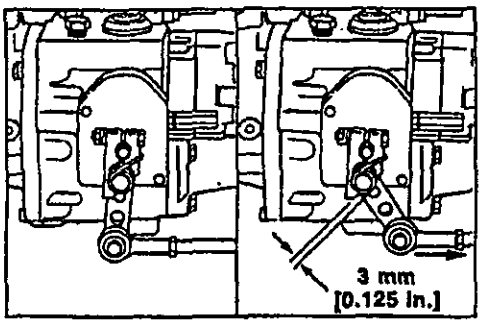

Throttle Travel/Throttle Air Cylinder

Checking

Throttle Lever Breakover - Checking

- Make sure the throttle linkage is adjusted so the throttle lever breaks over 3 to 6 mm [0.125 to 0.250] (1/8 to 1/4 inch) when the lever is in the full throttle position.
- The throttle lever stop must contact the rear throttle stop screw.

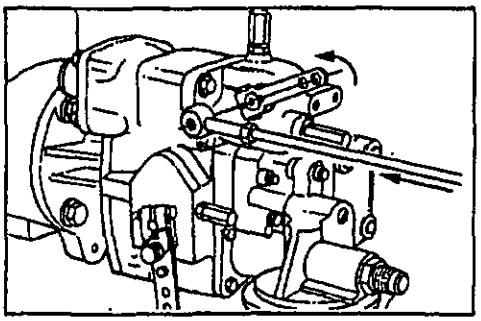

Variable Speed (VS) Throttle Linkage Adjustment

- Remove the throttle linkage from the VS throttle lever.
- Hold the VS lever in the idle position. Move the linkage to the idle position.
- With the VS lever in idle position, adjust the linkage.

- Move the VS lever and linkage to the maximum speed position.
- If the lever and the linkage are not aligned, adjust the linkage.

NOTE: Throttle travel on a VS lever is not adjustable. The pump may be recalibrated with a stiffer VS Governor spring to reduce throttle travel.

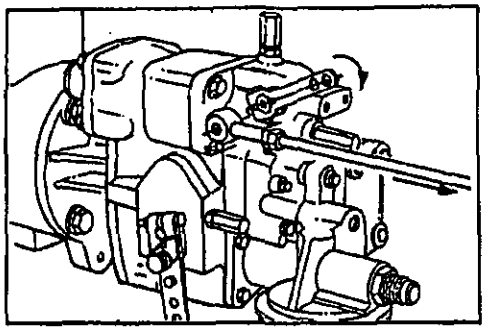

- Install the linkage on the lever.

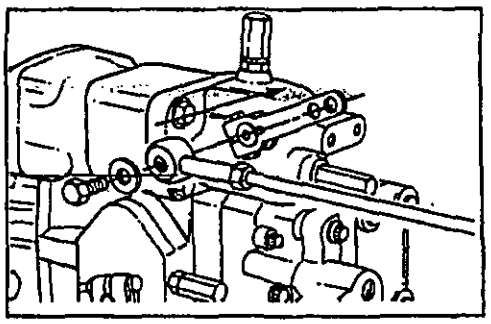

This section applies only to air cylinder equipped engines:

- (1) Braking cylinder
- (2) Throttle cylinder
- (3) Throttle cylinder air inlet
- (4) Cylinder vent jumper hose
- (5) Vent to the engine air intake or breather
- (6) Throttle cylinder extension rod
- (7) Boot
- (8) Roller tappet and bushing
- (9) Throttle lever
- (10) Braking cylinder extension rod
- (11) Braking cylinder air inlet

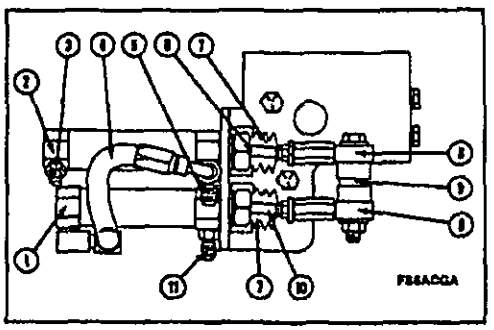

Using your hand, push the throttle lever (9) toward the cylinders (low idle position). The braking cylinder extension rod (10) must move smoothly to the retracted position. The cylinder spring must push the throttle lever from the air cylinders approximately 1/2 of the distance between the idle and full fuel positions.

If the cylinder does not move smoothly or does not push the throttle lever, the cylinder must be replaced.

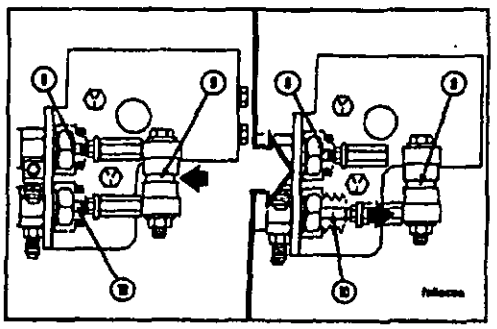

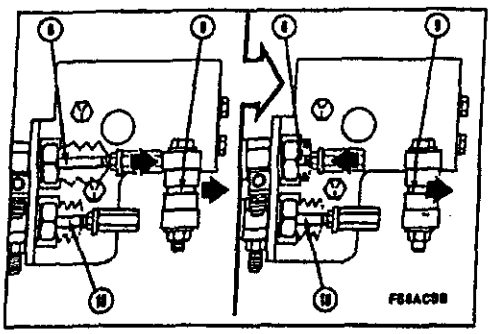

Use your hand, pull the throttle lever (9) **away** from the air cylinder (full fuel position). Pull the throttle cylinder extension rod (6) **toward** the throttle lever. The extension rod cap **must** touch the roller tappet on the throttle lever. Release the throttle cylinder extension rod. The rod **must** move **toward** the cylinder.

If the rod does **not** move smoothly or does **not** return to the retracted position, the cylinder **must** be replaced.

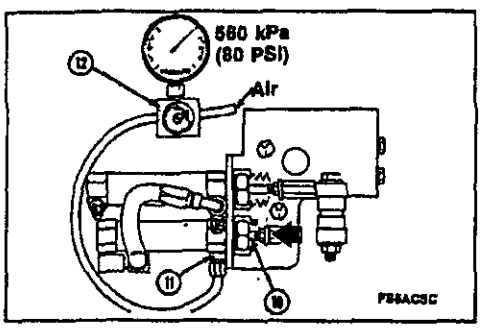

Connect a source of compressed air to a pressure gauge and a regulator (12). Connect a hose from the regulator to the braking cylinder air inlet (11).

Adjust the regulator until 560 kPa [80 psi] air pressure is applied to the air cylinder. The braking cylinder extension rod (10) **must** be in the retracted position completely when the pressure is applied.

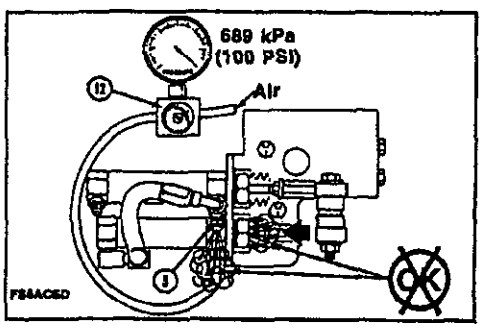

Increase the regulator pressure to 689 kPa [100 psi]. There **must** be **no** air leaking from the vent (5) or around the extension rod.

Reduce the air pressure to "0". The extension rod **must** move approximately 1/2 of its distance of travel.

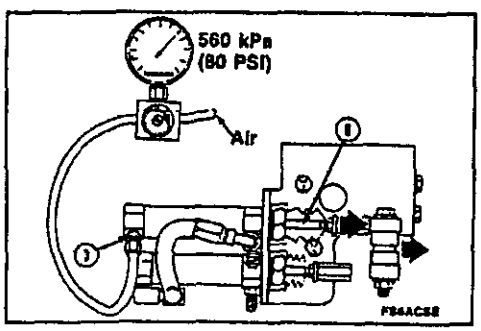

Connect the compressed air supply to the throttle cylinder air inlet (3).

Adjust the regulator until 560 kPa [80 psi] is applied to the air cylinder. The cylinder extension rod (6) **must** move the throttle lever to the full fuel position. Pull the throttle lever to be sure the lever is in the full fuel position.

Increase the regulator pressure to 689 kPa [100 psi]. **There must be no** air leaking from the vent (5) or around the throttle air cylinder.

Reduce the regulator pressure to 0. The extension rod **must** move to the retracted position.

If a cylinder is **not** within the air test specifications, the cylinder **must** be replaced. Refer to the following Procedure, Throttle Air Cylinder - Remove and Install in the K38 and K50 Shop Manual, Bulletin No. 3810304.

Disconnect the air supply from the air cylinder.

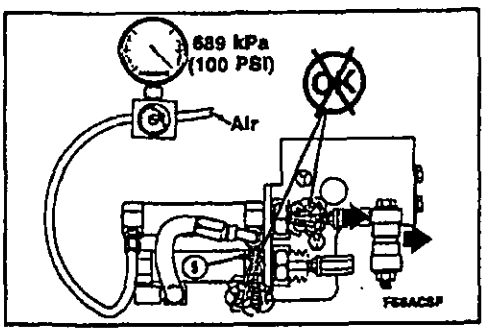

Pull the boots (7) off the cylinder jam nuts.

Apply grease to both of the cylinder extension rods (6) and (10). Apply grease to the side of the roller tappets (8) to lubricate the tappets and the bushings.

Install the boots on the jam nuts.

Connect the air supply line.

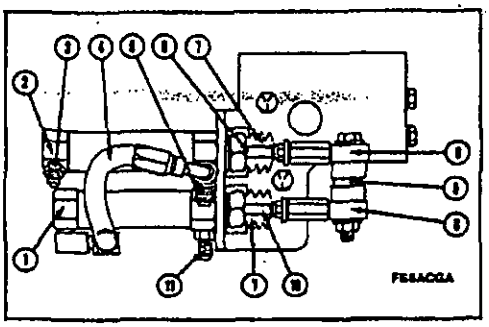

Injectors

Every 6,000 hours or 2 years clean and calibrate the injectors. This procedure **must** be done at a Cummins Authorized Repair Location.

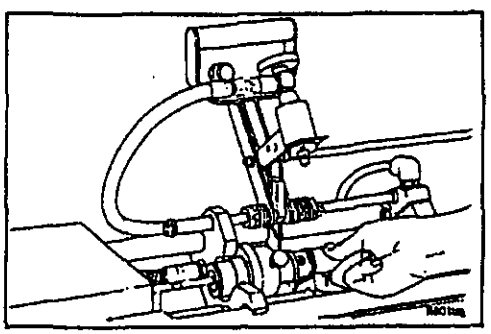

Removal

Steam clean the engine. Steam is the best method of cleaning a dirty engine or a piece of equipment. If steam is not available, use a solvent to wash the engine.

Protect all electrical components, openings, and wiring from the full force of the cleaner spray nozzle.

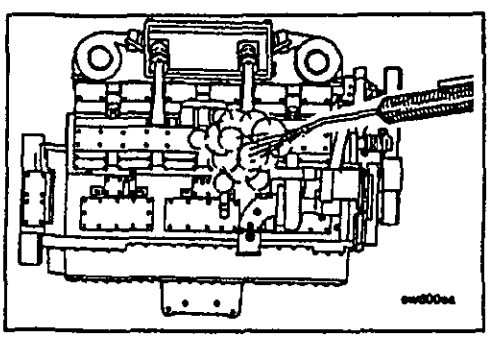

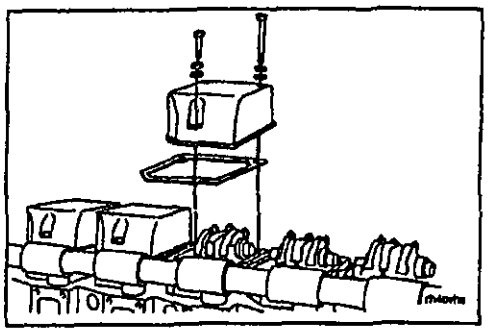

Remove the rocker lever cover.

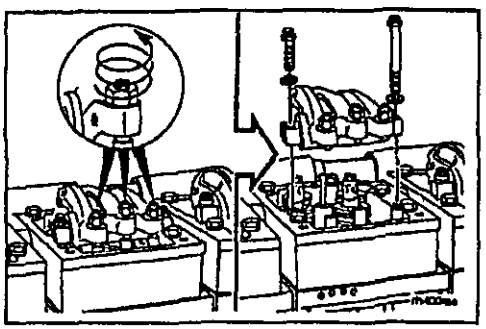

Remove the rocker lever assembly.

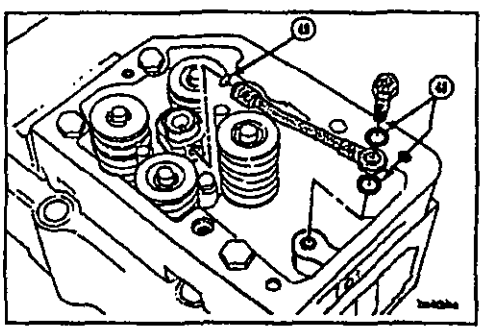

NOTE: This step applies only to engines equipped with STC or HVT injectors.

Remove the banjo connector mounting screw. Remove the oil transfer tube. Remove and discard the sealing washers (48) and the o-ring (49).

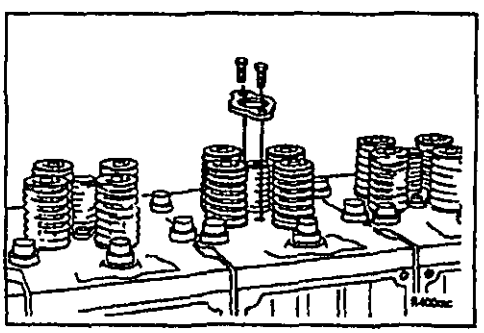

NOTE: The rocker housing has been removed from the illustration for clarity.

Remove the injector hold down capscrews. Remove the clamp.

NOTE: Do not let the tappet fall out of the HVT injector. Damage can result.

For STC or HVT injectors, use an injector puller, Part No. 3376497. Be sure the puller arms are firmly under the top stop screw. Tighten the clamping ring (1). Use the slide hammer to remove the injector.

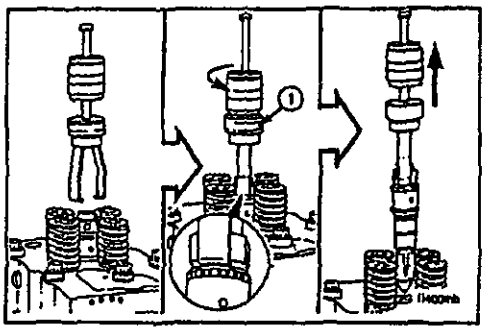

For standard injectors, use injector puller, Part No. 3376000 or 3376497. Put the split collar over the injector. *Slide the locking collar over the split collar. Use the slide* hammer to remove the injector.

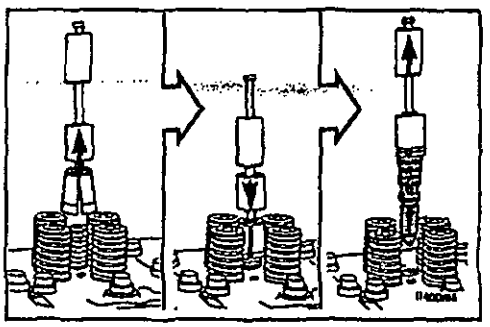

Checking

NOTE: Injector plungers and barrels have a very precise fit and are damaged easily. Do not remove the plungers unless you have been trained using the proper techniques. Do not allow the plunger to fall out of the injector.

Remove the o-rings (1, 2, and 3). Discard the o-rings.

NOTE: Sealing rings are available in different thicknesses to adjust the injector protrusion.

Remove the sealing ring (4), and note the cylinder location.

Use a lint free cloth and clean the exterior of the injector. Carefully check the area where the sealing ring makes contact with the injector.

Check the orifice screen (5). It must be clean. If there is debris on the screen, remove the retaining clip and the screen for cleaning. Clean the screen in solvent and dry with compressed air. Install the screen and retaining clip.

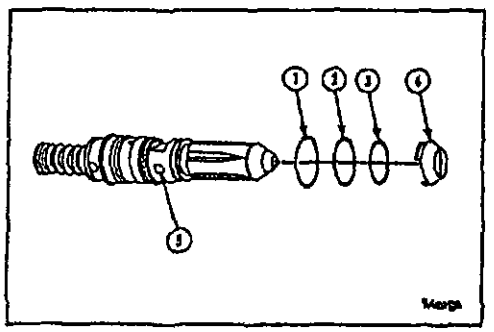

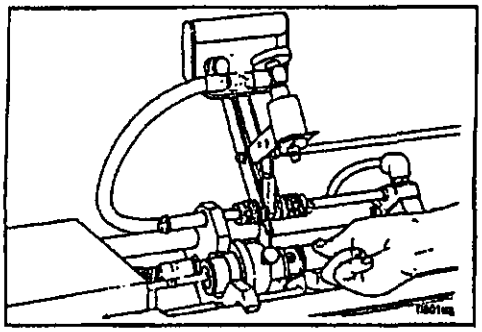

Calibration

Calibrate the injectors. This procedure requires special equipment and must be done at a Cummins Authorized Repair Location. For PTD injectors, refer to the Injector PT Rebuild Manual, Bulletin No. 3379071. For HVT/STC injectors, refer to the PT (Type D) STC Injector Shop Manual, Bulletin No. 3810313.

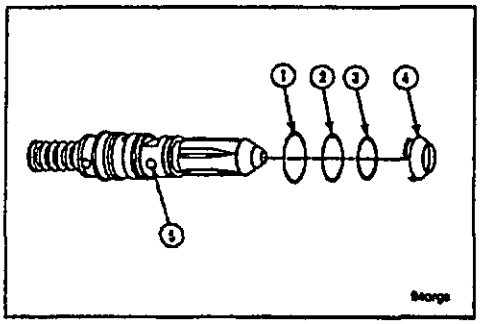

Installation

Identify the o-rings so they can be installed in the correct injector groove.

O-ring (1), Part No. 3010510, has a red dot or stripe. The o-ring is a dull gray in appearance.

O-ring (2), Part No. 205216, has no markings.

O-ring (3), Part No. 193736, has a green dot or stripe. The ring is shiny black in appearance. Lubricate the o-rings with vegetable oil and install them on the injector.

Install the proper size seal ring (4).

NOTE: Premium K injectors use the same o-ring, Part No. 193736, in all three locations, (1,2,3). Premium K injectors can be identified by the presence of two balance orifices (5) in the injector body. Standard STC injectors have only one orifice.

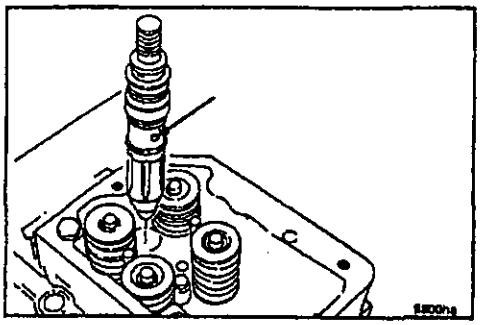

Position the standard injector in the bore. Turn the injector so that the injector screen points toward the hold down capscrew hole on the intake side of the head.

NOTE: Do not let the tappet fall out of the HVT injector. Damage can result.

The tappet must be installed correctly. The large holes in the side must be near the rocker lever assembly.

The tappet can not fall out of the STC Top Stop injector.

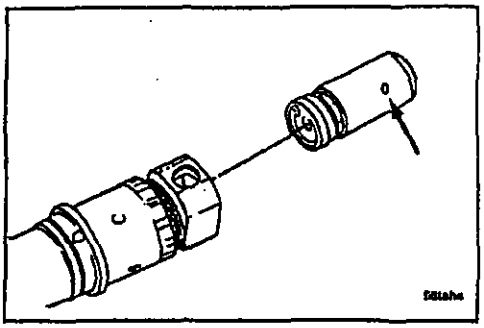

NOTE: Do not push the injector on the seat until it is correctly aligned.

Position the STC or HVT injector in the bore. Turn the injector so that the hole in the top stop screw points to the oil supply hole in the rocker lever housing.

Use the oil jumper tube and the connector screw as tools. Turn the injector until the holes are aligned. Remove the connector screw and the tube.

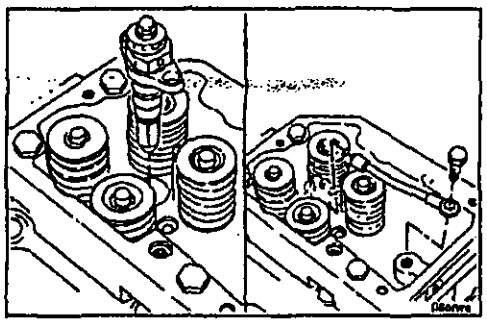

Caution: Do NOT use a wooden tool to push the injector on the seat. Failure can result due to splinters falling into the tappet. Use a socket size of 1-1/4 inch or 27 mm to seat the injector

Use a blunt object that touches the top stop screw. Use a quick, hard push with your hands to seat the injector. A single snapping sound will be heard when the injector is seated properly.

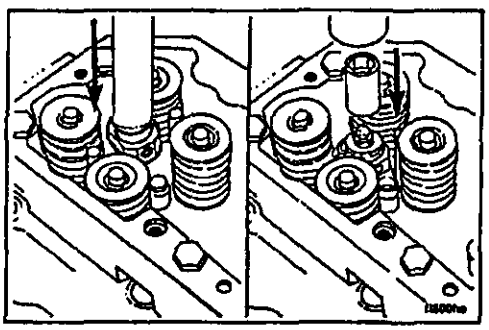

NOTE: The injector hold down clamp that is used on engines with STC or HVT requires capscrews that are 3 mm [1/8 inch] longer than those on other K38 and K50 engines.

Install the hold down clamp and the self-locking capscrews. *Tighten the capscrews alternately and evenly so* the clamp will be centered on the injector body. Tighten the capscrews to 16 N•m [145 in-lb].

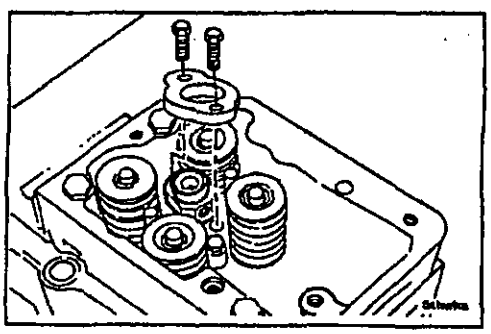

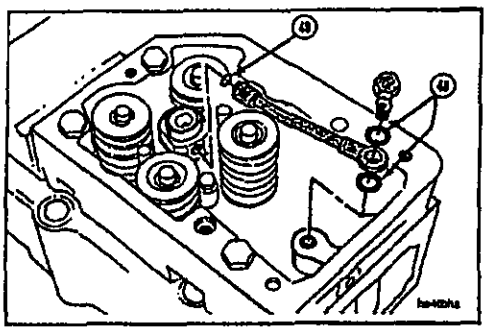

Install the o-ring (49) on the jumper tube. Lubricate the o-ring with engine oil. Install the jumper tube and the copper sealing washers (48). Install the connector screw. Tighten the screw to 25 N•m [20 ft-lb].

NOTE: The oil jumper tube for full top stop STC injectors is 8 mm [5/16 in] shorter than the tube used with the early HVT injectors. The tubes can not be mixed.

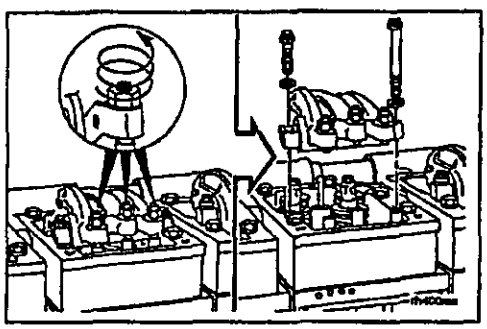

Install the rocker lever assembly and STC injector link, if applicable.

Torque Value: 90 N•m [65 ft-lb]

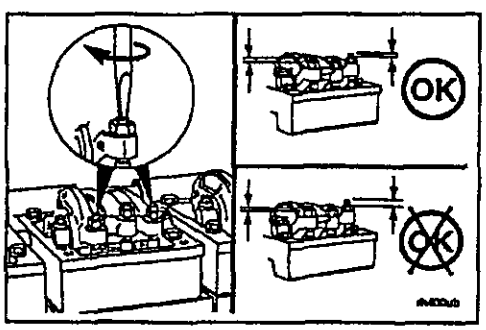

Adjust the rocker levers. Refer to Section 6 for this procedure.

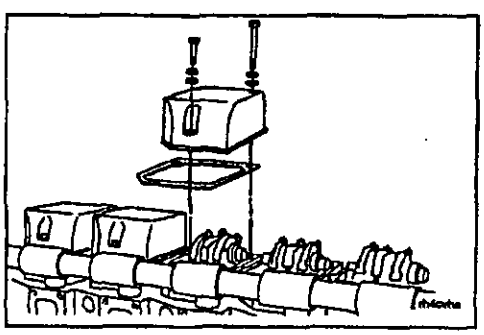

Install the rocker lever cover.

Torque Value: 40 N•m [30 ft-lb]

Cooling System

Cleaning System and Changing Antifreeze

Caution: Do not use caustic cleaners in the cooling system. Aluminum components will be damaged.

NOTE: Read Section V, Coolant Recommendations/ Specifications, before attempting cooling system maintenance.

Every 2 years or 6,000 hours of operation (whichever comes first), change the coolant.

The cooling system must be clean to work correctly.

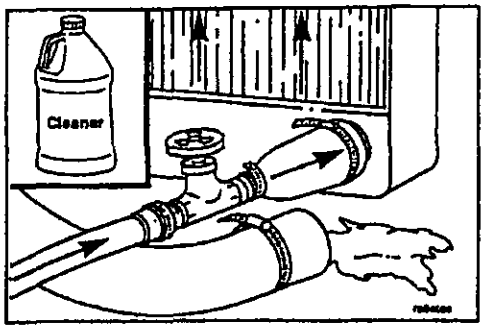

Warning: Wait until the temperature is below 50°C [120°F] before removing the coolant system pressure cap. Failure to do so can cause personal injury from heated coolant spray.

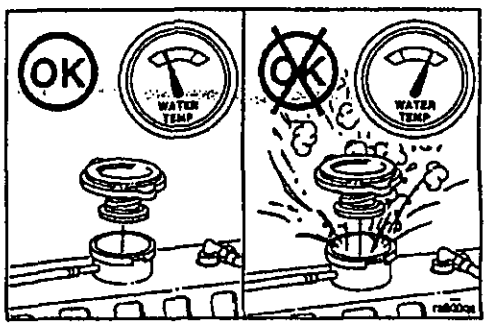

NOTE: The performance of RESTORE is dependent on time, temperature, and concentration levels. An extremely scaled or flow restricted system, for example, may require higher concentrations of cleaners, higher temperatures, or longer cleaning times or the use of RESTORE PLUS. RESTORE can be safely used up to twice the recommended concentration levels. RESTORE PLUS must be used only at its recommended concentration level. Extremely scaled or fouled systems may require more than one cleaning.

RESTORE	CC2610	(1 gallon)
RESTORE	CC2611	(5 gallons)
RESTORE	CC2612	(55 gallons)
RESTORE PLUS	CC2638	(1 gallon)

Drain the cooling system. Do not allow the cooling system to dry out. RESTORE will not be as effective if the cooling system is allowed to dry.

Do not remove the coolant filter.

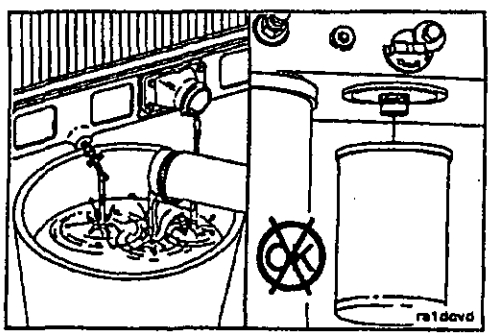

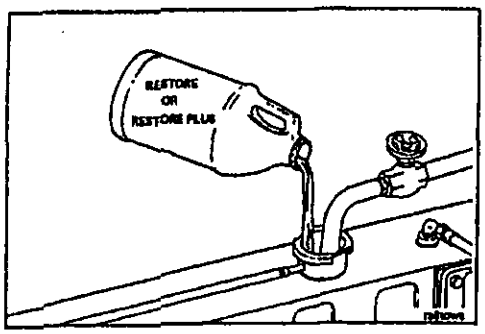

Caution: Fleetguard® RESTORE contains no antifreeze. Do not allow the cooling system to freeze during the cleaning operation.

Immediately add 3.8 liters [1 U.S. gallon] of Fleetguard® RESTORE, RESTORE PLUS, (or equivalent) for each 38 to 57 liters [10 to 15 gallons] of cooling system capacity, and fill the system with plain water.

Turn the heater temperature switch to high to allow maximum coolant flow through the heater core. The blower does not have to be on.

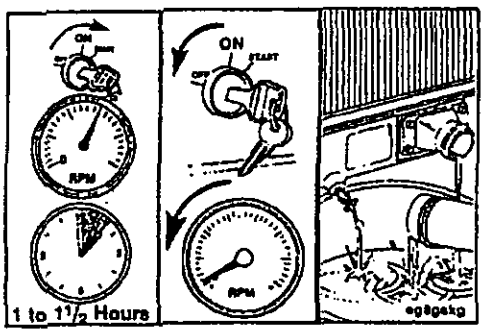

Operate the engine at normal operating temperatures (at least 85°C [185°F]) for 1 to 1 1/2 hours.

Shut the engine off, and drain the cooling system.

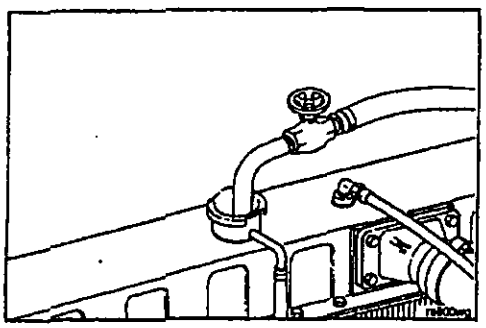

Fill the cooling system with clean water to flush the cooling system.

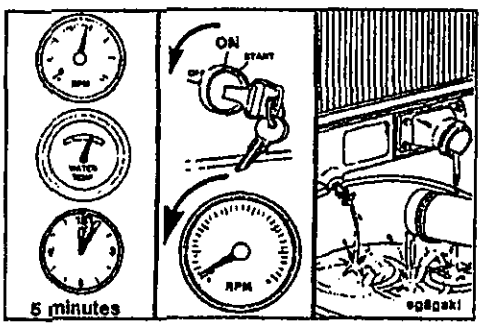

Operate the engine at high idle for 5 minutes with the coolant temperature above 85°C [185°F].

Shut the engine off, and drain the cooling system.

NOTE: If the water being drained is still dirty, the system must be flushed again until the water is clean.

Refill system with new heavy duty coolant and SCA as earlier described.

Fan Hub

Inspection

Every 6,000 hours or 2 years inspect the fan hub for proper end clearance and grease leakage.

Remove the fan belt. Refer to Section A for this procedure.

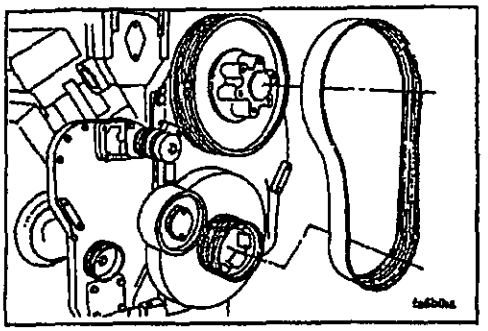

Rotate the fan hub pulley to check for rough or damaged bearings. Inspect the pulley grooves for excessive wear. Check for grease leakage. Use a dial indicator to check the bearing end clearance.

Bearing End Clearance		
mm		In
0.03	MIN	0.001
0.15	MAX	0.006

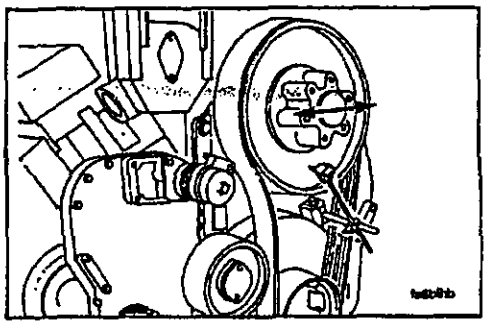

Replace a fan hub with a new or rebuilt unit as necessary. Refer to the Troubleshooting and Repair Manual, K38 and K50 Series Engines, Bulletin No. 3810432, for removal and replacement instructions.

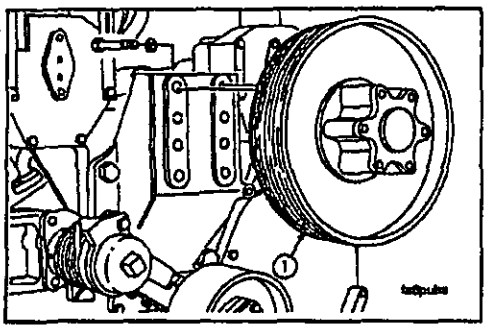

Install the fan belt. Refer to Section A for the installation procedures.

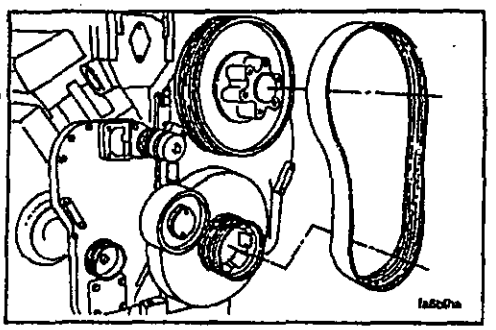

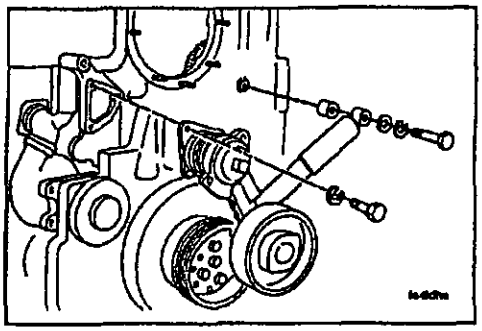

Fan Idler Pulley Assembly

Rebuild/Replacement

Every 6,000 hours or 2 years inspect the idler pulley assembly. Rebuild or replace the idler pulley as necessary. Refer to the Troubleshooting and Repair Manual, K38 and K50 Series Engines, Bulletin No. 3810432, for rebuild and replacement procedures.

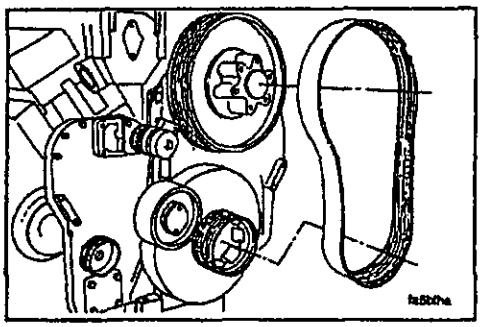

Rebuild

Remove the fan belt. Refer to Section A for the removal procedures.

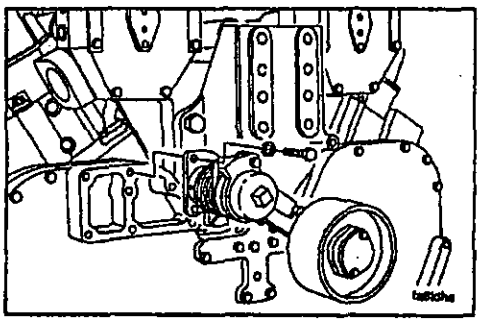

Remove the three capscrews. Remove the idler assembly.

NOTE: Engines with a 457 mm [18 in] fan center have an adapter plate between the idler and the front gear cover.

Remove the adapter plate.

Refer to the Shop Manual, K38 and K50 Series Engines, Bulletin No. 3810304, for rebuild procedures of the fan idler pulley and pivot arm.

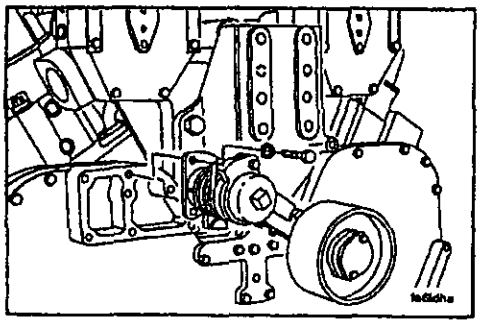

Installation

NOTE: If the engine has two vibration dampers, a longer idler arm than shown is required.

If the engine has a fan hub with 457 mm [18 in] center (low mount fan), an adapter plate is required between the idler arm and the front gear cover.

Check to make sure the spring on the idler arm is **not** under tension. This will aid the future installation of the fan hub.

Install the fan belt idler assembly, the three lock washers and capscrews.

Torque Value: 60 Nem [45 ft-lb]

Install the fan belt. Refer to Section A.

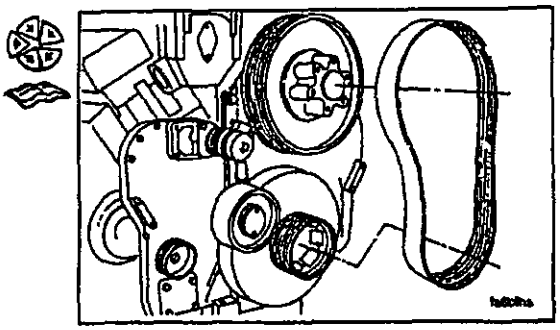

Water Pump

Rebuild/Replacement

Every 6,000 hours or 2 years rebuild or replace the water pump.

NOTE: A minor chemical build up or streaking at the water pump weep hole is normal. Do not repair or replace the water pump unless an actual leak is confirmed. Refer to the Troubleshooting and Repair Manual, K38 and K50 Series Engines, Bulletin No. 3810432.

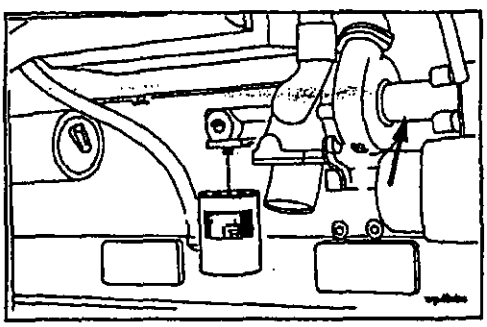

Thermostats and Seals

Replacement

Remove the:

(1) Capscrews and lock washer (two each)
(2) Plate, cover (or water filter head)
(3) Seals, o-ring (two each)
(4) Capscrews and lock washers (four each)
(5) Shield, heat (right bank only)
(6) Capscrews and lock washers (two each)
(7) Housing, thermostat
(8) Gasket

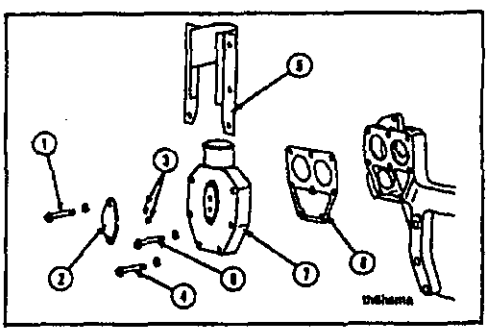

Check the support. For further information, refer to Procedure No. 08-15, Thermostat Support - Clean and Check for Reuse, in the K38 and K50 Shop Manual, Bulletin No. 3810304.

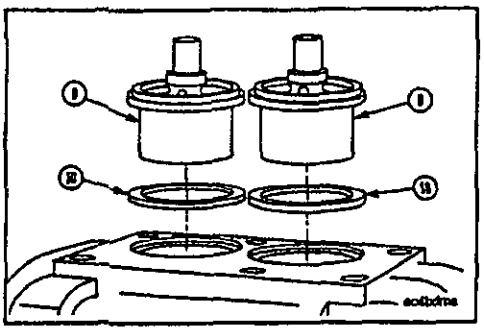

Remove the thermostats. Remove the seals (10) from the housing. Discard the seals.

Check the thermostats for wear. If the barrel of the thermostat is worn or fretted, it must be discarded.

Clean all gasket surfaces and bores.

Use solvent or steam. Clean the parts.

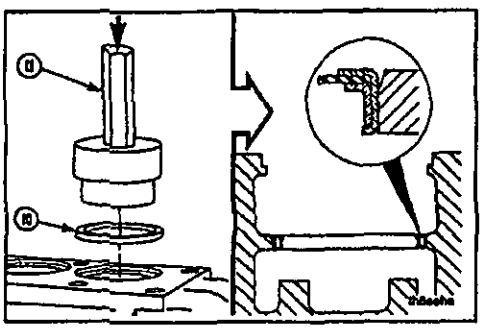

The seal must be installed with the part number positioned up.

Use a mallet and thermostat seal driver, Part No. 3375411, or equivalent, to install the thermostat seal. Install the seal.

NOTE: Install the seal no more than 0.51 mm [0.020 in] below the top of the cast edge.

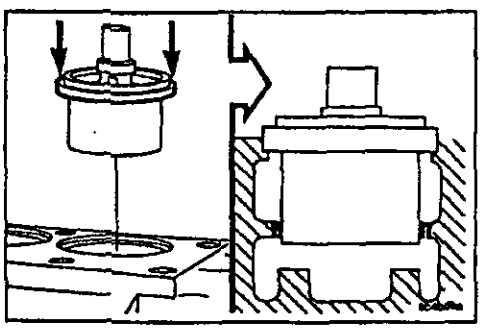

Install the thermostat by pushing on the outer rim.

NOTE: If the engine being serviced is a K50, make sure the correct thermostat is installed. Thermostats for the K38 and K50 engines are different.

The K50 thermostats contain a nitrile rubber seat vulcanized to the brass collar at the barrel seat. This seat prevents coolant leakage and wear. The thermostat with the rubber seat must be on K50 engines. The thermostat with the rubber seat is not required for the K38 engine, but can be installed.

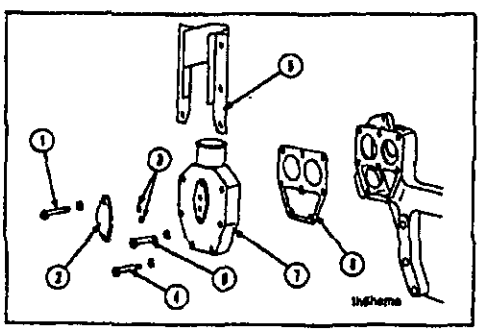

NOTE: Do not tighten the capscrews until assembly is complete.

Install the:

(8) Gasket
(7) Housing, thermostat
(6) Capscrews and lock washers (two each)
(5) Shield, heat (right bank only)
(4) Capscrews and lock washers (four each)
(3) Seals, o-ring (two)
(2) Plate, cover (or filter head)
(1) Capscrews and lock washers

Tighten the capscrews.

Torque Value: 45 N•m [35 ft-lb]

Turbocharger

Inspection

Inspect the turbocharger every 6,000 hours or 2 years. Remove the air intake and the exhaust piping. Check the turbocharger as follows:

Look for damaged or cracked compressor or turbine blades. Check to see that the turbocharger shaft spins freely.

NOTE: If visual inspections or dimensional checks indicate a problem, contact a Cummins Authorized Repair Location for assistance. Refer to the model number on the turbocharger dataplate.

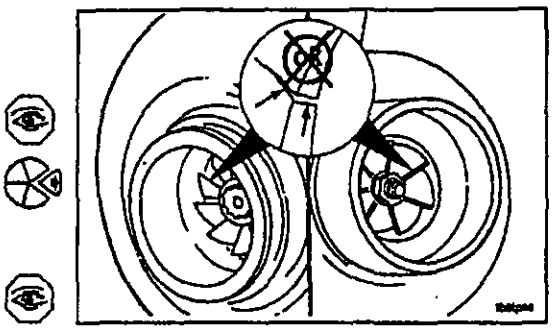

Holset Model HC5 and AIResearch Model T-18A

Measure the axial clearance (end to end). Rebuild or replace the turbocharger if axial motion (end play) is greater than specified below. Refer to the Troubleshooting and Repair Manual, K38 and K50 Series Engines, Bulletin No. 3810432, for removal procedures and to the Turbocharger Rebuild Manual, Bulletin Nos. 3379091 (T-18A), 3810243 (HC5), or 3810386 HT100 Shop Manual, for rebuild procedures.

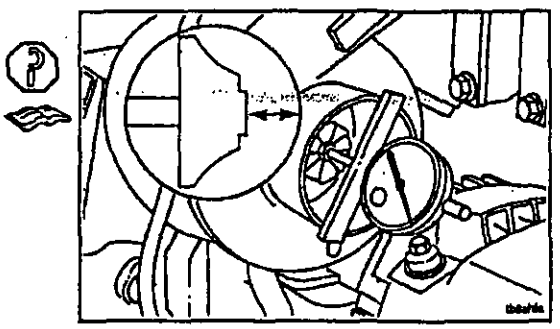

	End Play Dimension	
Model	Min	Max
HC5A	0.05 mm [0.002 in]	0.13 mm [0.005 in]
T18A	0.10 mm [0.004 in]	0.23 mm [0.009 in]
HT100	0.06 mm [0.002 in]	0.16 mm [0.006 in]

Measure the radial clearance (side to side).

NOTE: Hold the shaft toward the feeler gauge to check this dimension.

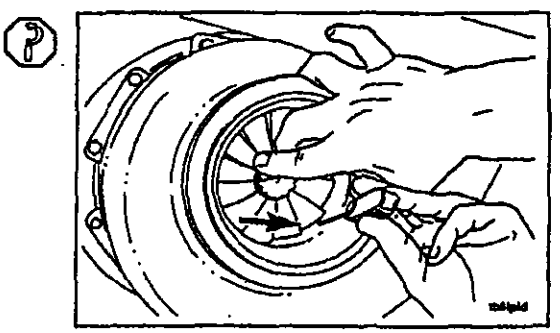

Model HC5A	
Compressor Impeller	
Min	Max
0.15 mm [0.006 in]	0.45 mm [0.018 in]
Turbine Wheel	
Min	Max
0.20 mm [0.008 in]	0.55 mm [0.021 in]
Model T18A	
Compressor Impeller	
Min	Max
0.08 mm [0.003 in]	0.18 mm [0.007 in]

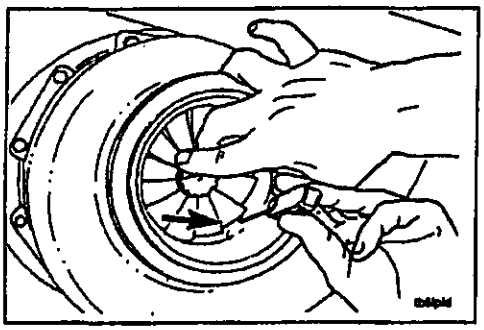

Model HT100 Compressor Impeller	
Min	Max
0.25 mm [0.010 in]	0.46 mm [0.018 in]
Turbine Wheel	
Min	Max
0.38 mm [0.015 in]	0.53 mm [0.021 in]

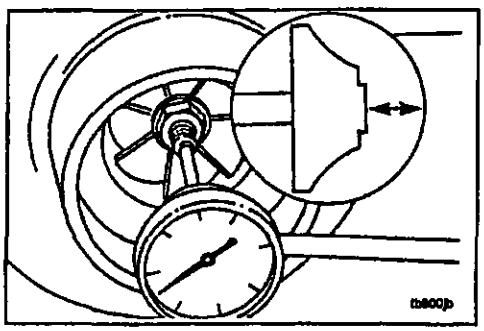

Brown Boveri®, Model RR-153 and RR-151

To measure axial clearance, use Part No. ST-537 Dial Depth Gauge, or a dial indicator. Measure the axial motion.

BBC (RR-151) and (RR-153) End Clearance		
mm		in
0.09	MIN	0.004
0.13	MAX	0.005

If the end clearance exceeds the specifications, the part must be replaced or rebuilt. Refer to Bulletin No. 3810235, Exhaust Gas Turbocharger, RR-153, Instructions for Operation and Maintenance or Bulletin No. 3810325, Exhaust-Gas Turbocharger, RR151-12, Instructions for Operation and Maintenance.

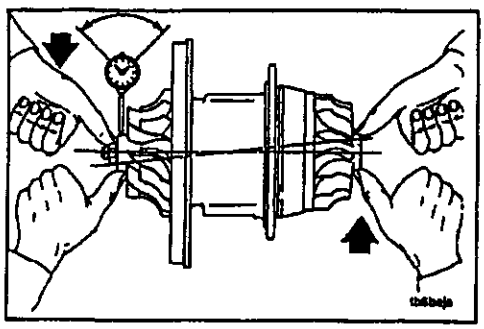

NOTE: The compressor and turbine casings do not require removal to measure the radial clearance. The parts are shown removed for clarity.

Use a dial indicator. Measure the clearance.

BBC (RR-151) and (RR-153) Bearing Radial Clearance			
	mm		in
RR-153	0.55	MAX	0.021
RR-151	0.75	MAX	0.030

If the clearance exceeds the specifications, the part must be replaced or rebuilt. Refer to Bulletin No. 3810235, Exhaust-Gas Turbocharger, RR-153, Instructions for Operation and Maintenance or Bulletin No. 3810315, Exhaust-Gas Turbocharger, RR151-12, Instructions for Operation and Maintenance

Air Compressor

Checking

Complete air compressor inspection is required every 6,000 hours or 2 years.

NOTE: All air compressors have a small amount of oil carryover which lubricates the piston rings and moving parts. When this oil is exposed to normal air compressor operating temperatures over a period of time, it will form varnish or carbon deposits. If the following inspections are not done, the air compressor piston rings will be affected by high operating temperatures and pressures, and will not seal correctly.

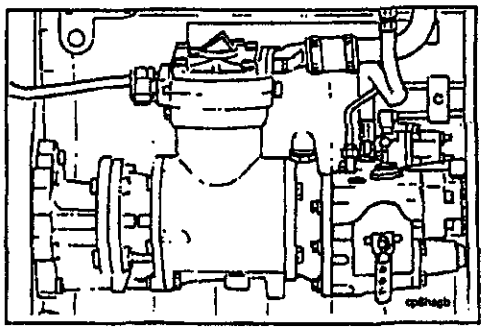

Air Compressor Discharge-Checking

Drain the air system wet tank to release the system air pressure. Remove the air discharge line from the air compressor.

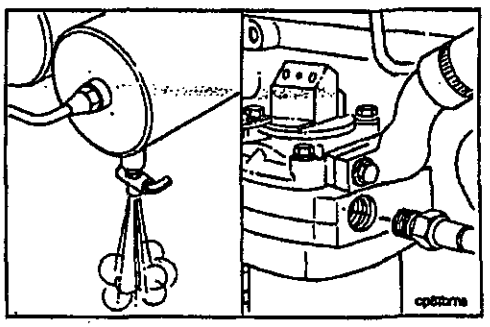

Measure the total carbon deposit thickness inside the air discharge line as shown. If the total carbon deposit (X) exceeds 2 mm [1/6 inch], clean and inspect the cylinder head, the valve assembly, and the discharge line. Replace if necessary. Refer to the appropriate Air Equipment Manual listed below for procedures, or contact your Cummins Authorized Repair Location:

- Single Cylinder, Bulletin No. 3810242
- Twin Cylinder, Bulletin No. 3379056

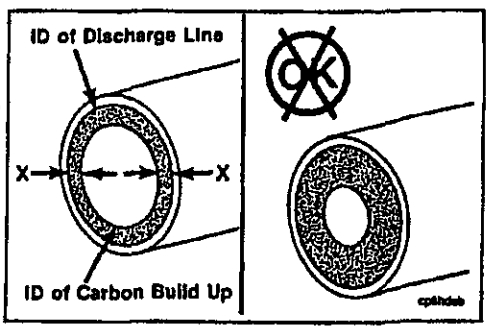

If the total carbon deposit exceeds specifications, continue checking the air discharge line connections, up to the first tank, until total carbon deposit is less than 2 mm [1/16 inch]. Clean or replace any lines or connections that exceed this specification.

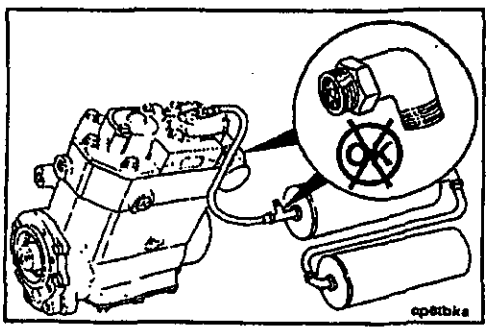

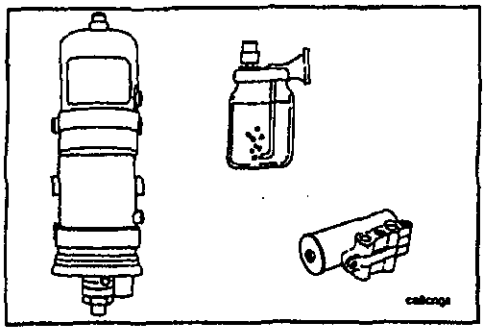

Inspect any air driers, spitter valves, pressure relief valves, and alcohol injectors for carbon deposits or malfunctioning parts. Inspect for air leaks. Maintain and repair the parts according to the manufacturer's specifications.

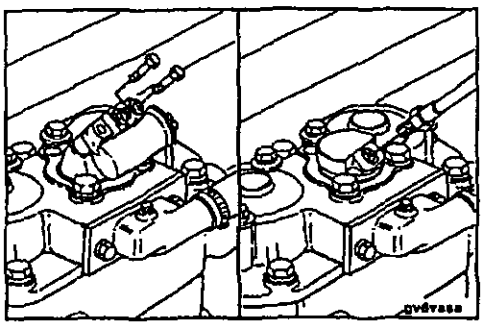

Air Compressor Intake-Checking

Remove the air governor or air governor signal line from the air compressor unloader body.

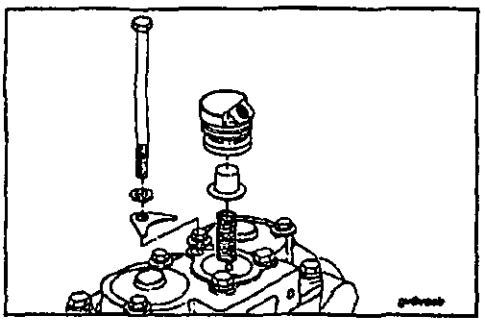

Remove the center unloader valve.

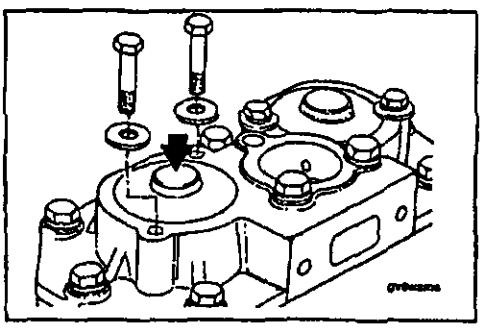

Caution: The unloader valve body is installed with spring tension. To avoid personal injury, hold unloader body down while removing the capscrews.

Hold the unloader body down and remove the two capscrews and washers.

- Remove the two unloader assemblies. One is above each cylinder. Discard the o-rings and seals.

Clean the unloader valves with solvent and a non-metallic brush to remove carbon. Do not use a sharp object. The sealing surfaces can be damaged.

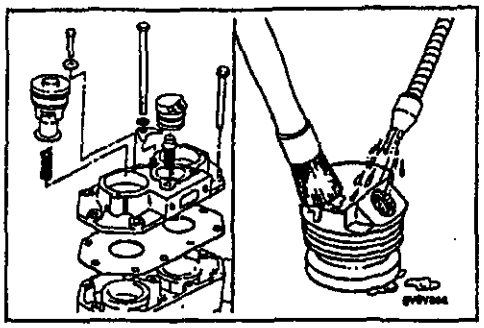

Inspect the upper part of the center unloader valve cap where the rectangular ring seal seats for scoring. Replace if scored.

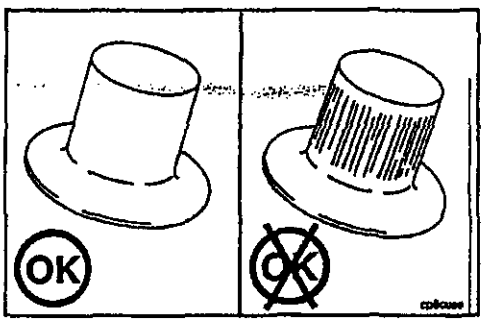

Visually inspect the unloader valves for deep scratches or cracks. Replace if scratched or cracked.

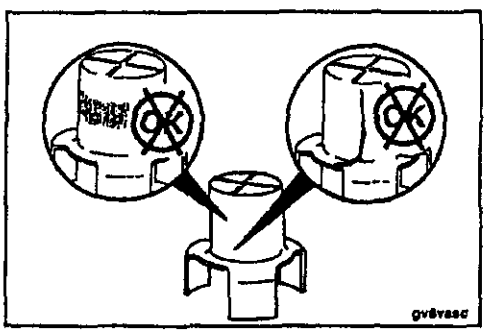

Visually inspect the unloader valves for carbon buildup. If carbon or heavy varnish is present, remove, clean, and inspect the compressor head and the valve assembly. Replace the parts as necessary. Refer to the appropriate Air Equipment Manual listed below for procedures, or contact your nearest Cummins Authorized Repair Location:

- Single Cylinder, Bulletin No. 3810242.
- Twin Cylinder ST676, Bulletin No. 3810257
- Twin Cylinder, ST773, Bulletin No. 3810347

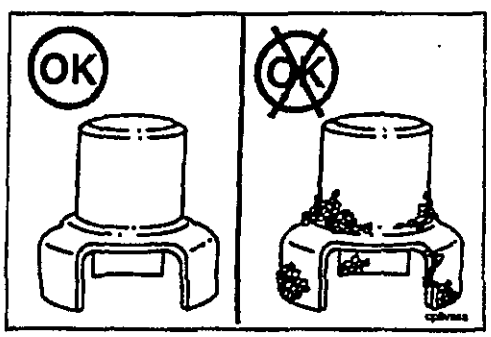

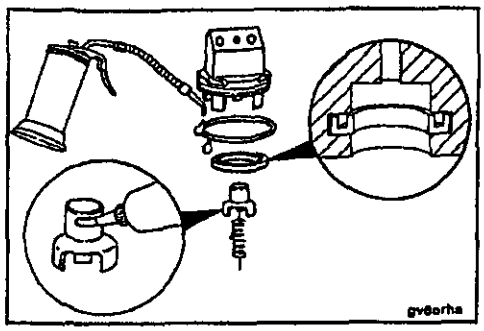

Install the unloader valve cap spring in the air compressor.

NOTE: Some unloader bodies require 2 yellow o-rings. Lubricate the unloader body o-ring with engine oil.

NOTE: The rectangular ring seal must be installed with the grooved side up.

Install the rectangular ring seal as shown.

Use anti-seize compound to lubricate the outside diameter of the cap.

Install the unloader valve cap in the unloader body.

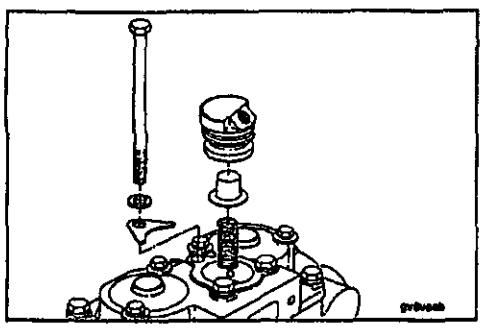

Install the center unloader. Tighten the capscrew to 40 *Nem [30 ft-lb]*.

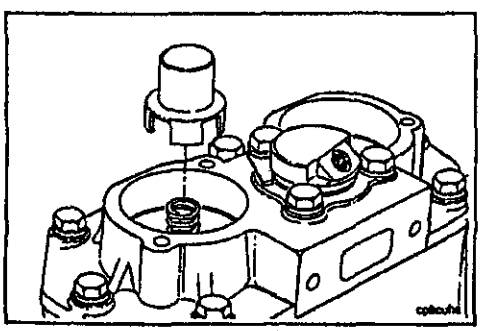

Install the cap into the cover and make sure the three tangs are in the three slots of the intake valve seat.

Lubricate the unloader valve with anti-seize compound.

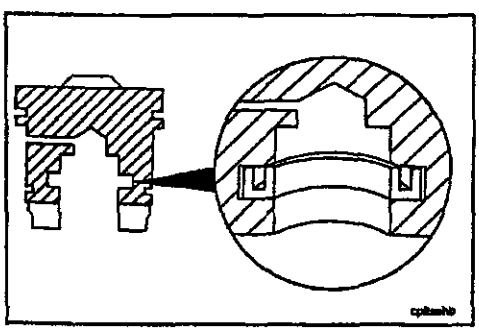

Caution: The rectangular ring seal MUST BE installed with the grooved side up; failure to do so will result in air system damage and brake failure.

Install a new rectangular seal inside the unloader body cavity.

Install new top and bottom o-ring seals.

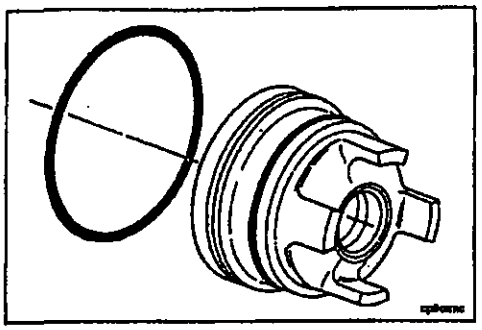

Use clean engine oil to lubricate the seals.

Install the unloading body into the cover.

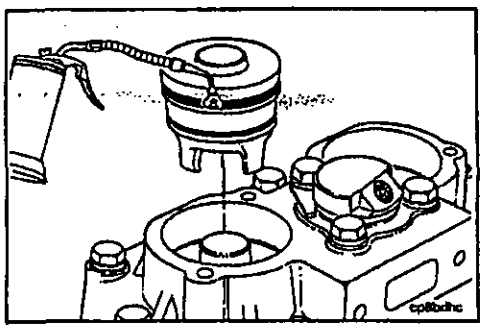

Install the unloading valve body.

NOTE: Press the unloading valve body down to be sure the tangs of the unloader valve cap are in the three slots of the intake valve seat. If the parts are not aligned, the compressor will not function properly.

Hold the unloading body down and install the two plain washers and captive washer capscrews.

Tighten the capscrews to 15 N•m [120 in-lb] torque.

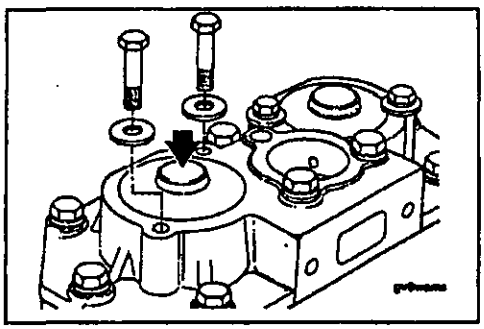

Install the air governor or air governor signal line to the unloader body.

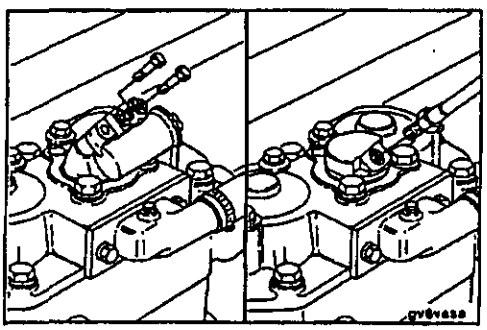

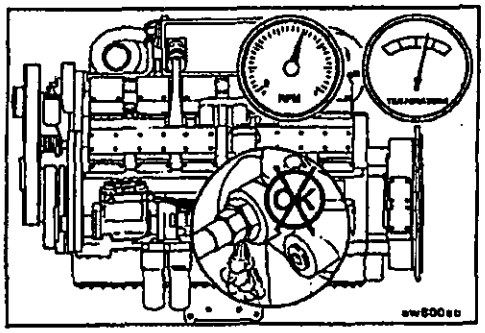

Operate the engine and check for air leaks.

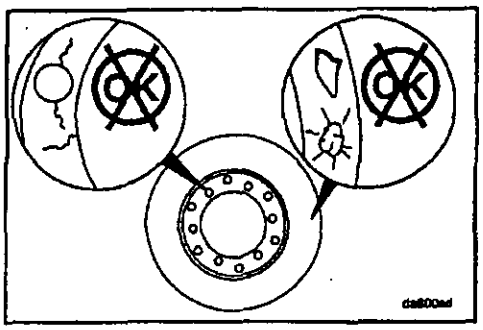

Vibration Damper

Checking

NOTE: Vibration dampers have a limited service life. The dampers must be inspected every 6,000 hours of service, and must be replaced after 24,000 hours in service. K2000 engine dampers are replaced every 12,000 hours.

NOTE: Do not repair or balance a viscous damper in the field.

- Use solvent. Clean the exterior of the damper.
- Inspect the mounting flange for cracks.
- Inspect the housing for dents, bulges, or leaks.
- Replace the damper if it is damaged.

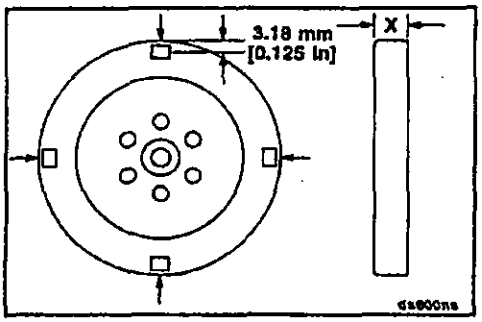

Thickness Measurement

Use a paint solvent and a fine emery cloth. Remove paint from the front and back of the housing at the four areas as shown in the drawing.

Measure the damper thickness no less than 3 mm [1/8 inch] from the outside circumference to be sure readings are taken on a flat surface.

Measure the thickness (x) at four locations around the damper, 90 degrees apart. The readings must not vary more than 0.25 mm [0.010 inch]. Refer to the Maximum Vibration Damper Thickness table for the thickness. If the thickness exceeds these specifications, the damper must be replaced.

Maximum Vibration Damper Thickness		
Vendor	mm	in
Houdaille®	65.38	2.574
Made in England F-82 and After	65.68	2.585
Made in England Before F-82	65.91	2.595

NOTE: If the damper has been in service for 24,000 hours or more, it must be replaced, regardless of the thickness measurement. Dampers on K2000 engines must be replaced after 12,000 hours of service.

Damper Leakage Detection

If visual inspection found signs of leaks, thorough leakage detection is required.

Use crack detection developer, Part No. 3375434 or equivalent. Spray the rolled lip of the damper.

NOTE: The crack detection kit, Part No. 3375432, contains the necessary cleaner, the penetrant and the developer to check for cracks using the dye penetrant method.

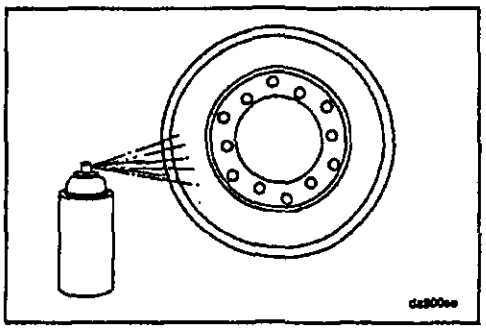

Caution: Wear protective clothing to prevent personal injury from burns.

Place the damper in an oven with the rolled lip toward the bottom.

Adjust the temperature of the oven to 93°C [200°F] and allow the damper to remain in the oven for 2 hours.

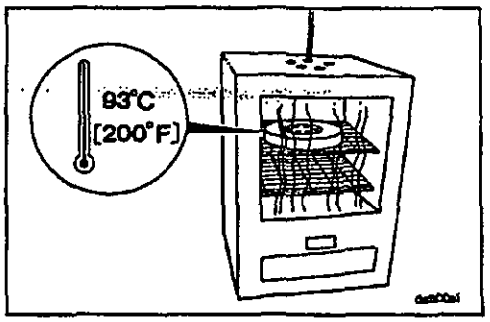

Caution: Wear protective clothing to prevent personal injury from burns.

Remove the damper and look for fluid leakage around the rolled lip. The damper must be replaced if there is any fluid leakage.

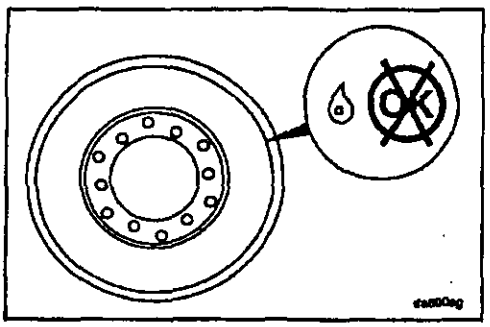

Engine Protection System

Calibration

The engine protection system must be calibrated every 6,000 hours or 2 years. Follow the manufacturer's recommended maintenance procedures.

If the CompuSave unit is in use, refer to the Operations and Maintenance Manual for the Flight Systems 9560 Test Set, Bulletin No. 57-9560-01.

If the Flight Systems Engine Saver is in use, refer to the Engine Saver Level 7 Manual, Bulletin No. 57-A550-26.

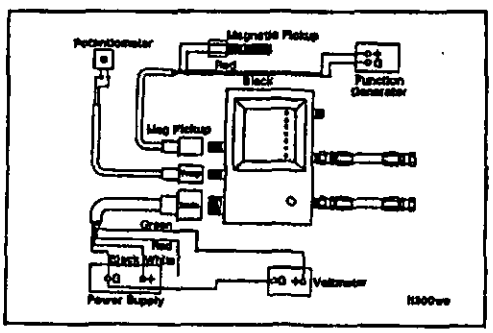

CA-IR-257

Ref: HELCO T-5, page 59, line 4; steam turbine overhaul.

According to the testimony, "A steam turbine overhaul is performed once a year." Please provide the following information:

a. the dates during which each overhaul was performed on each steam turbine;

b. state the reason for performing the overhaul (e.g., regular maintenance or other reason); and

c. provide the amounts spent performing each overhaul on each unit in each of the past five years (i.e., 2001 through 2005).

HELCO Response:

a. As shown in the 2001 Overhaul Schedule (Attachment 4 of CA-IR-56), 2002 Overhaul Schedule (Attachment 4 of CA-IR-56), 2003 Overhaul Schedule (page 5 of response to CA-IR-50) and 2004 Overhaul Schedule (HELCO-525), turbine overhauls were last performed on the following steam units:

Steam Unit	Dates Performed	Project Number	Amount Spent
Puna Steam	10/01/01 – 11/10/01 10/18/02 – 12/06/02	H0000356 H0000601	$465,241 $396,793
Shipman 3	09/13/04 – 12/12/04	H0000688	$712,105
Shipman 4	03/10/03 – 04/15/03	H0000605	$764,218
Hill 5	08/04/02 – 09/13/02	H0000597	$836,830
Hill 6	04/14/03 – 06/01/03	H0000608	$979,912

b. The reason for performing turbine major overhauls is to conduct internal steam path

inspections as this is not normally done during regular annual overhauls. The outage duration is typically several weeks longer due to the extra work required to disassemble, clean, repair, inspect, reassemble, align, and restore to service a steam turbine. The turbine rotor is sandblasted to clean it of any deposits and to allow for a clean surface for non-destructive testing ("NDT") of components. The stationary diaphrams are sandblasted and NDT'd. Necessary repairs are made to turbine shaft packing; internal clearances are verified to ensure the turbine performance will be restored. The turbine steam inlet nozzle is inspected for defects and repaired as required as this section is subjected to the most stresses during operation of the machine from high temperature steam. The bearings are inspected during a non-turbine major annual overhaul. The governor system is inspected, checked for wear and repaired as necessary. The turbine is reassembled after ensuring that all internal parts are in proper alignment, and the rotor is reinstalled in the shell. The top cover is reinstalled and the bolts are all reinstalled, heated internally to allow for the proper stretch of the bolt which facilitates achieving proper torque on the hardware to ensure that no steam leaks will result from the mating flange of the upper and lower cases. The generator rotor is removed from the generator casing to allow for a detailed inspection of the generator stator bore and check for loose slot wedges, end turns and other normally inaccessible areas. The stator winding is cleaned on air cooled units. Depending on the metallurgy of the generator rotor retaining rings, they are also NDT'd to inspect for evidence of stress corrosion cracking which can result in catastrophic failure of the rings and destruction of the generator. Referring to the table in subpart a., the Puna turbine was overhauled in 2001 as a standard turbine major overhaul. It was overhauled again in 2002 due to the failure of the DC lube oil pump which resulted in damage to the turbine and generator bearings and

internal seals of the turbine. These costs are shown above in subpart a. The Shipman 3 and Shipman 4 overhauls were done as standard turbine major overhauls. These units experience a typical cracking of the turbine shell metal that occurs in the turbine steam inlet area as a result of the metal thickness and age of the Shipman turbines. These areas are monitored on a regular basis at each turbine major overhaul. Hill 5 turbine received a standard turbine major in 2002. During the rewind of the generator the following year, only the bearings were inspected. In 2003, Hill 6 was done as a normal turbine major overhaul to inspect the internals and clean deposits from the turbine rotor as there was a decline in efficiency due to steam contamination.

c. See response to subpart a. for the amounts spent performing each turbine overhaul on each unit in each of the past five years (i.e., 2001 through 2005).

CA-IR-258

Ref: HELCO T-5, page 59, line 7; CT Turbine Replacements.

According to the testimony, "CT-3, CT-4 and CT-5 LP Turbine replacements will be performed every 10 years at an average cost of $650,000 each." Please provide the following information:

a. Provide the dates on which turbine replacements were made for CT-3.

b. Provide the amounts spent on the replacement of the unit in each of the past 13 years that CT-3 has been in service.

c. Explain and provide complete copies of supporting documentation for this statement in testimony.

HELCO Response:

a. The CT-3 Low Pressure Turbine ("LPT") has never been permanently replaced with a rotable unit, but underwent extensive repairs in the 1994 through 1996 timeframe as a result of environmental conditions that exist at the Puna site due to the original installation of the High Pressure Turbine ("HPT") and LPT. Refer to HELCO's TY 1994 rate case, Docket No. 7764, HELCO RT-4, pages 2 – 4; HELCO's TY 1996 rate case, Docket No. 94-0140, HELCO RT-5, pages 25 – 35; HELCO's TY 1999 rate case, Docket No. 97-0420, CA-SIR-563, HELCO WP-511; and HELCO's TY 2000 rate case, Docket No. 99-0207, CA-IR-5030 and HELCO-WP-516 for information regarding the CT-3 LPT history. Invoices from Stewart and Stevenson ("S&S"), manufacturer's representative at the time, are shown in CA-IR-258 Attachment 1 (originally submitted as Docket No. 7764, HELCO-RWP-401(a)), CA-IR-258 Attachment 2, and CA-IR-258 Attachment 3. This repair was necessitated by severe erosion of the blade coatings and subsequent parent (base) metal degradation and power loss. This was a result of the unit being equipped with standard coatings applied by General Electric ("GE"), CT-3's manufacturer.

b. The table below indicates expenses incurred:

Mar-94	LPT Stage 1 nozzle and blade replacement	$197,325
Oct-94	Install lease LPT	
Jan-95	Install repaired LPT with rainbow coatings on stage one & two	$291,196
Jun-96	Install lease LPT	
Oct-96	Install repaired HELCO LPT	$346,580
	Total repair cost excluding lease payments	$835,101

These have been the only LP Turbine repairs performed to date on any HELCO LM2500 Combustion Turbine. While the HELCO power turbine was at the depot for repair, a leased LPT was installed in the unit to maintain unit operation.

c. The above work on CT-3 was performed in a cooperative manner with GE and S&S to determine the best metallurgy protection for the HELCO LM2500's. The repaired power turbine continues to function satisfactorily with 45,500 hours accumulated as of September 1, 2006 since being installed in October of 1996. CT-4 and CT-5 were supplied with the proper platinum aluminide coatings on the HPT and LPT. The preferred approach is to replace the LPT with a rotable unit, which results in only one maintenance outage to swap the components. The investigative work required at CT-3 could not be done with a rotable LPT; thus, the HELCO CT-3 LPT was removed and replaced during the period indicated to test the different 'rainbow' coatings applied to the blades in actual operation. Through this process, the company determined that platinum aluminide to be the preferred coating. Support for CT-3, CT-4 and CT-5 LP Turbines every 10 years at an average cost of $650,000 each is based on the manufacturer's recommendation to overhaul the LPT at 50,000 operating hour intervals on a condition based maintenance interval, in conjunction

with a combustion turbine major overhaul. This is not a hard, fixed maintenance interval, but condition based. (See CA-IR-258 Attachment 4.) CT-3 is approaching this level of operating hours after 10 years (since October 1996). It is anticipated that CT-4 and CT-5, operating an average of 4600 hours per year currently, and expected to increase in annual operating hours once the combined cycle heat recovery units are built, to reach the 50,000 hour threshold in the 2012 and 2013 time frame. (See CA-IR-258 Attachment 5.) As shown in CA-IR-258 Attachment 1 and Docket No. 99-0207, CA-IR-5030, Page 10, a LPT overhaul can extend over a wide range, depending on its condition, and will occur once every 8 – 10 years of operation. Operating hours for these units are shown in HELCO-509 and in response to CA-IR-54.

HELCO-RWP-401(a)
DOCKET NO. 7764
PAGE 1 OF 5

INVOICE

STEWART & STEVENSON SERVICES, INC.
REMITTANCE ONLY TO: P.O. BOX 200441 HOUSTON, TX 77216

PAGE: 1

CUSTOMER NO.	CUSTOMER P.O. NUMBER	OUR ORDER NO.	INVOICE DATE	PAGE	INVOICE NUMBER
9800945	52686	WC2589-00	6/27/94	24	24001993

NOTIFY SERVICING BRANCH FOR CORRESPONDENCE AND REFER TO OUR ORDER NUMBER

SERVICE ANYTIME, ANYWHERE
SALES • RENTAL • PARTS
REPAIR
SERVICING MAINTENANCE

"ALL BILLS ARE PAYABLE IN HOUSTON, TEXAS, NET 10 DAYS. NO DISCOUNTS ALLOWED. WE RESERVE THE RIGHT TO CHARGE INTEREST ON ALL PAST DUE ACCOUNTS AT THE RATE OF 18% PER ANNUM OR THE MAXIMUM NONUSURIOUS RATE, WHICHEVER IS LESS."

SOLD TO:
HAWAII ELECTRIC LIGHT CO.
P. O. BOX 1027
54 HALEKAUILA ST.
HILO HI 967211027

SHIP TO:

UNIT SERIAL NUMBER	MODEL NUMBER	HOURS/MILES	ECONOMY	SHIPPED VIA	WAY BILL NUMBER	STATUS
						OPEN

COMMENTS: TO INVOICE FOR LABOR, PARTS, AND EXPENSES TO BORESCOPE HELCO GE LM 2500 GAS TURBINE ENGINE. TO REMOVE ENGINE FROM PACKAGE, REMOVE POWER TURBINE, AND CHANGE OUT FIRST STAGE LPT NOZZLES, SHROUDS, AND INSULATION AS REQUIRED. REINSTALL GAS TURBINE BACK INTO PACKAGE. ASSIST WITH AND CHECK OUT UNIT FOR VIBS, LEAKS, ETC., AND BRING BACK ON LINE. SEE COPIES OF SIGNED DCA'S FOR DETAILS OF DAILY WORK ACTIVITIES.

PART NUMBER	DESCRIPTION	QUANTITY	UNIT SALE	EXTENDED SALE
19F078	SEAL	4.00	14.20	56.80
245P17A	BOLT,MACHINE	1.00	5.78	5.78
L21491P03	BLADE,STG 1	166.00	377.60	62,681.60
L21496P03*	INSULATOR *EXPEDITED	2.00	108.63	217.26
L21751G01	NOZZLE	14.00	5,034.00	70,476.00
SSKIT002	KIT,SPLITLINE *27	1.00	4,018.70	4,018.70
SSKIT013	KIT,LPT NOZZLE *30	1.00	11,838.61	11,838.61
9083M19P05	RET,BLADE STG 1	175.00	3.14	549.50
9102M48G03	SEAL	1.00	1,357.00	1,357.00
9102M49G03	SEAL	1.00	1,357.00	1,357.00
9102M49G04	SEAL	1.00	1,478.00	1,478.00
9610M50P21	NUT	3.00	7.70	23.10
9632M38P08*	INSULATOR *EXPEDITED	2.00	78.38	156.76
9632M38P09	INSULATOR	2.00	71.25	142.50
9663M23G10	SHROUD, STAGE 1 LPT	12.00	1,180.00	14,160.00
9663M23G10*	SHROUD,LPT	2.00	1,298.00	2,596.00
9663M71P13	NUT,SELF LOCKING	28.00	4.55	127.40
9663M72G04	COVER,NOZZLE STG.1	12.00	69.45	833.40
9665M50P01	BOLT	1.00	6.33	6.33
968BM02P02	BOLT	48.00	17.10	820.80
968BM04P05*	STRIP *EXPEDITED	15.00	1.38	20.70
968BM20P01	COVER	2.00	55.00	110.00
968GM20P02	COVER	2.00	55.00	110.00
	PARTS TOTAL:			173,143.24
	FREIGHT CHARGES	1.00	55.25	55.25
	LEE AIR FREIGHT	1.00	2,869.83	2,869.83

BROWNSVILLE
BEAUMONT
CORPUS CHRISTI
DALLAS
HOUSTON
SAN ANTONIO
WICHITA FALLS
HARVEY LA.

*** CONTINUED ON PAGE 2 ***

VOICE DISCREPANCIES MUST BE REPORTED, IN WRITING, TO STEWART & STEVENSON WITHIN TEN (10) DAYS OF RECEIPT. WE WILL ACCEPT MERCHANDISE RETURNED WITHOUT OUR PERMISSION, A MINIMUM HANDLING CHARGE OF TEN OF THE SALE PRICE WILL BE MADE ON ALL RETURNED MERCHANDISE. PURCHASER AGREES TO ALL TERMS AND CONDITIONS AS STATED ON REVERSE SIDE.

TOTAL AMOUNT DUE

HELCO-RWP-401(a)
DOCKET NO. 7764
PAGE 3 OF 5

INVOICE

STEWART & STEVENSON SERVICES, INC.

REMITTANCE ONLY TO: P.O. BOX 200441 HOUSTON, TX 77216

67270

PAGE 1 OF 2

CUSTOMER NO.	CUSTOMER P.O. NUMBER	OUR ORDER NO.	[illegible]	[illegible]	[illegible]
9800945	52686	WC2589-001	4/27/94	24	24001993

NOTIFY SERVICING BRANCH FOR CORRESPONDENCE AND REFER TO OUR ORDER NUMBER

SERVICE ANYTIME, ANYWHERE
SALES • SERVICE • PARTS
RENTING—LEASING
PERIODIC MAINTENANCE

"ALL BILLS ARE PAYABLE IN HOUSTON, TEXAS, NET 10 DAYS. NO DISCOUNTS ALLOWED. WE RESERVE THE RIGHT TO CHARGE INTEREST ON ALL PAST DUE ACCOUNTS AT THE RATE OF 18% PER ANNUM OR THE MAXIMUM NONUSURIOUS RATE, WHICHEVER IS LESS."

SOLD TO:
HAWAII ELECTRIC LIGHT CO.
P. O. BOX 1027
54 HALEKAUILA ST.
HILO HI 967211027

SHIP TO:

UNIT SERIAL NUMBER	MODEL NUMBER	HOURS/MILES	[illegible]	SHIPPED VIA	WAY BILL NUMBER	STATUS

PART NUMBER	DESCRIPTION	QUANTITY	UNIT SALE	EXTENDED SALE
	FED EXPRESS	1.00	46.58	46.58
	EMERY	1.00	644.16	644.16
	EMERY	1.00	1,350.51	1,350.51
	AIR TRAVEL	1.00	1,642.40	1,642.40
	MEALS	1.00	360.00	360.00
	HOTEL	1.00	768.57	768.57
	CAR RENTAL	1.00	376.23	376.23
	GAS	1.00	18.00	18.00
	MISC. TOTAL:			8,131.53
	TURBINE LABOR	88.00	65.00	5,720.00
	TURBINE LABOR OT	42.50	78.00	3,315.00
	TURBINE LABOR DT	1.00	92.00	92.00
	TRAVEL TIME	[illegible]	65.00	3,997.50
	LABOR TOTAL:			13,124.50
	** SUB TOTAL			194,399.27
	STATE			2,925.73

ORIGINAL

BROWNSVILLE
BEAUMONT
CORPUS CHRISTI
DALLAS

HOUSTON
PORTLAND
WICHITA FALLS
HARVEY

029453	R.A.	Act./Sub-Act. or WO No.	Obj. ed	Amount	
Mch. Rec'd	GP	55323671	21	197,325	00
Inv. Verified					
Appr. Inspect.					

INVOICE DISCREPANCIES MUST BE REPORTED, IN WRITING, TO STEWART & STEVENSON WITHIN TEN (10) DAYS OF RECEIPT. WE CANNOT ACCEPT MERCHANDISE RETURNED WITHOUT OUR PERMISSION. A MINIMUM HANDLING CHARGE OF 18% OF THE INVOICE PRICE WILL BE MADE ON ALL RETURNED MERCHANDISE. PURCHASER AGREES TO ALL TERMS AND CONDITIONS AS STATED ON REVERSE SIDE.

TOTAL AMOUNT DUE 197,325.00

STEWART & STEVENSON SERVICES, INC.

REMITTANCE ONLY TO: P.O. BOX 200441 HOUSTON, TX 77216

INVOICE

RECEIVED

PAGE: 1

CUSTOMER NO.	CUSTOMER P.O. NUMBER	OUR ORDER NO.	INVOICE DATE	BRANCH	INVOICE NUMBER
9800945	$4376.00	WC2788-008	5/31/95	24	24002864

NOTIFY SERVICING BRANCH FOR CORRESPONDENCE AND REFER TO OUR ORDER NUMBER

SERVICE ANYTIME, ANYWHERE
SALES • SERVICE • PARTS
RENTING—LEASING
PERIODIC MAINTENANCE

"ALL BILLS ARE PAYABLE IN HOUSTON, TEXAS NET 10 DAYS. NO DISCOUNTS ALLOWED. WE RESERVE THE RIGHT TO CHARGE INTEREST ON ALL PAST DUE ACCOUNTS AT THE RATE OF 18% PER ANNUM OR THE MAXIMUM NONUSURIOUS RATE, WHICHEVER IS LESS."

ACCOUNTING DEPT.

SOLD TO:
HAWAII ELECTRIC LIGHT COMPANY
P.O. BOX 1027
54 HALEKAUILA ST
HILO HI 96720

SHIP TO:

UNIT SERIAL NUMBER	MODEL NUMBER	HOURS/MILES	SALESMAN CODE	SHIPPED VIA	WAY BILL NUMBER	STATUS
						OPEN

OMMENTS: TO INVOICE SEPARATELY THE ITEMS USED IN THE REPAIRS INVOLVED WITH THE REPAIR OF THE DAMAGE CAUSED BY THE 4TH STAGE BOLT THAT BROKE.

PART NUMBER	DESCRIPTION	QUANTITY	UNIT SALE	EXTENDED SALE
L21753G02	STG 3 NOZZLE	2.00	3,834.00	7,668.00
1646M35P01	STG 4 BLADE	26.00	380.75	9,899.50
9083M19P06	RET STG 3 & 4	238.00	3.36	799.68
9083M19P07	RET STG 5	90.00	6.11	549.90
9083M19P08	RET STG 6	72.00	3.36	241.92
9109M72P05	NUT STG 3,4,5,& 6	160.00	5.78	924.80
9147M29P01	BOLT STG 3,4,5,& 6	160.00	8.25	1,320.00
9632M36P04	4TH SHROUD INSULA[illegible]	2.00	73.75	147.50
9663M04P04	STG 4 NOZZLE	10.00	525.00	5,250.00
9663M04P04	STG 4 NOZZLE	10.00	1,681.00	16,810.00
9663M05P05	STG 5 NOZZLE	1.00	312.50	312.50
9688M01P03	BOLT STG 3 & 4	38.00	17.70	672.60
	PARTS TOTAL:			44,596.40
	SUBTOTAL			44,596.40

ORIGINAL

BROWNSVILLE
BEAUMONT
CORPUS CHRISTI
DALLAS

HOUSTON
SAN ANTONIO
WICHITA FALLS
HARVEY, LA.

	R.A.	Acl./Sub-Acl. or WO No.	Ok. ed	Amount	
Mat. Rec'd					
Inv. Verified					
Appr. for Pmt.					

ALL INVOICE DISCREPANCIES MUST BE REPORTED, IN WRITING, TO STEWART & STEVENSON WITHIN TEN (10) DAYS OF RECEIPT. WE CANNOT ACCEPT MERCHANDISE RETURNED WITHOUT OUR PERMISSION. A MINIMUM HANDLING CHARGE OF 15% OF THE INVOICE PRICE WILL BE MADE ON ALL RETURNED MERCHANDISE. PURCHASER AGREES TO ALL TERMS AND CONDITIONS AS STATED ON REVERSE SIDE.

TOTAL AMOUNT DUE 44,596.40

ORIGINAL

W.O.	VERSION	WIP	EQ	TYP	CUSTOMER	SETUP	STATUS	REG.	ORIGINAL ACCOUNT
WC2788	8	59		P	9800945	092994	CLOSED	9505	2404659 046001/240000000 0000000

NAME: HAWAII ELECTRIC LIGHT CO. SLSMN: 0

** CLOSE ACCOUNT 2404659 REG 01 **

INV ACC	DATE	DESCRIPTION	DOCUMENT	AMOUNT	EXT SALE
2407801	053195	L21753G02 STG 3 NOZZLE	0360	2.00	3834.00 7668.00
	053195	1646M35P01 STG 4 BLADE	0000	26.00	380.75 9899.50
	053195	9083M19P06 RET STG 3 & 4	0364	238.00	3.36 799.68
	053195	9083M19P07 RET STG 5	0364	90.00	6.11 549.90
	053195	9083M19P08 RET STG 6	0364	72.00	3.36 241.92
	053195	9109M72P05 NUT STG 3,4,5,& 6	0364	160.00	5.78 924.80
	053195	9147M29P01 BOLT STG 3,4,5,& 6	0364	160.00	8.25 1320.00
	053195	9632M36P04 4TH SHROUD INSULA	0000	2.00	73.75 147.50
	053195	9663M04P04 STG 4 NOZZLE	0360	10.00	525.00 5250.00
	053195	9663M04P04 STG 4 NOZZLE	0360	10.00	1681.00 16810.00
	053195	9663M05P05 STG 5 NOZZLE	0360	1.00	312.50 312.50
	053195	9688M01P03 BOLT STG 3 & 4	0360	38.00	17.70 672.60
		2407801 TOTALS:		809.00	44596.40
		0000000 TOTALS:		.00	.00
		**** 2404659 TOTALS:		809.00	44596.40
		WORK ORDER TOTALS:		809.00	44596.40

STEWART & STEVENSON SERVICES, INC.

REMITTANCE ONLY TO: P.O. BOX 200441 HOUSTON, TX 77216

INVOICE

PAGE: 1

CUSTOMER NO.	CUSTOMER P.O. NUMBER	OUR ORDER NO.	INVOICE DATE	BRANCH	INVOICE NUMBER
9B00945	054375	WC2788-007	5/31/95	24	24002863

NOTIFY SERVICING BRANCH FOR CORRESPONDENCE AND REFER TO OUR ORDER NUMBER

SERVICE ANYTIME, ANYWHERE
SALES • SERVICE • PARTS
RENTING—LEASING
PERIODIC MAINTENANCE

"ALL BILLS ARE PAYABLE IN HOUSTON, TEXAS NET 10 DAYS. NO DISCOUNTS ALLOWED. WE RESERVE THE RIGHT TO CHARGE INTEREST ON ALL PAST DUE ACCOUNTS AT THE RATE OF 18% PER ANNUM OR THE MAXIMUM NONUSURIOUS RATE, WHICHEVER IS LESS."

SOLD TO:
HAWAII ELECTRIC LIGHT COMPANY
P.O. BOX 1027
54 HALEKAUILA ST
HILO HI 96720

SHIP TO:

UNIT SERIAL NUMBER	MODEL NUMBER	HOURS/MILES	EXCHANGE DUE	SHIPPED VIA	WAY BILL NUMBER	STATUS
						OPEN

OMMENTS: TO INVOICE FOR PARTS, LABOR AND EXPENSES TO REPAIR POWER TURBINE DUE TO CORROSION AND EROSION OF THE 1ST, 2ND, AND 3RD STAGES. ALSO TO REPAIR DAMAGE CAUSED BY THE BREAKAGE OF A BOLT IN THE 4TH STAGE OF THE POWER TURBINE. REPAIRED AND REPLACED POWER TURBINE BLADES AND NOZZLES AS REQUIRED. HAD SECOND AND THIRD STAGES COATED WITH DIFFUSION CHROMIDE IN AN EFFORT TO HELP REDUCE CORLROSION ACTIVITY. SHIPPED POWER TURBINE BACK TO HILO. REMOVED GE LEASE PT AND INSTALL ED HELCO REPAIRED POWER TURBINE.

PART NUMBER	DESCRIPTION	QUANTITY	UNIT SALE	EXTENDED SALE
J198P02A/B	NUT	42.00	1.25	52.50
J219P07A	SEAL	3.00	15.20	45.60
J219P09B	GASKET	2.00	32.55	65.10
J221P140	PACKING	2.00	1.15	2.30
J221P20	PACKING	4.00	.48	1.92
J627P03D	NUT	36.00	19.25	693.00
J643P05B	BOLT	12.00	4.62	55.44
J643P14E	BOLT	36.00	3.05	109.80
J643P23A	BOLT	15.00	4.79	71.85
J644007B	BOLT	6.00	9.08	54.48
J644P11B	BOLT	43.00	4.62	198.66
J644P11D	BOLT	40.00	14.30	572.00
J644P13A	BOLT	117.00	3.30	386.10
J644P14A	BOLT	36.00	3.36	120.96
J644P15A	BOLT	16.00	2.92	46.72
J644P17A	BOLT	24.00	4.40	105.60
J644P19A	BOLT	6.00	4.10	24.60
J644P19A	BOLT	8.00	4.51	36.08
J644P21A	BOLT	6.00	3.60	21.60
J644P22A	BOLT	6.00	20.00	120.00
J644P23C	BOLT	36.00	4.60	165.60
J645P05B	BROWNSVILLE BOLT	1.00	HOUSTON 16.95	16.95
J645P13A	BEAUMONT BOLT	12.00	SAN ANTONIO 4.62	55.44
J645P16A	CORPUS CHRISTI BOLT	15.00	WICHITA FALLS 6.60	99.00
J645P17A	DALLAS BOLT	8.00	HARVEY, LA 6.05	48.40
J814P054	BOLT	16.00	8.40	134.40
J14317P02	GASKET	1.00	.60	.60
J14517P01	GASKET	2.00	1.15	2.30
J14522P02	GASKET	1.00	.65	.65

*** CONTINUED ON PAGE 2 ***

ALL INVOICE DISCREPANCIES MUST BE REPORTED, IN WRITING, TO STEWART & STEVENSON WITHIN TEN (10) DAYS OF RECEIPT. WE CANNOT ACCEPT MERCHANDISE RETURNED WITHOUT OUR PERMISSION. A MINIMUM HANDLING CHARGE OF 15% OF THE INVOICE PRICE WILL BE MADE ON ALL RETURNED MERCHANDISE. PURCHASER AGREES TO ALL TERMS AND CONDITIONS AS STATED ON REVERSE SIDE.

TOTAL AMOUNT DUE

ORIGINAL

STEWART & STEVENSON SERVICES, INC.

REMITTANCE ONLY TO: P.O. BOX 200441 HOUSTON, TX 77216

INVOICE

PAGE: 2

CUSTOMER NO.	CUSTOMER P.O. NUMBER	OUR ORDER NO.	INVOICE DATE	BRANCH	INVOICE NUMBER
9800945	54375	WC2788-007	5/31/95	24	24002863

NOTIFY SERVICING BRANCH FOR CORRESPONDENCE AND REFER TO OUR ORDER NUMBER

SERVICE ANYTIME, ANYWHERE
SALES • SERVICE • PARTS
RENTING—LEASING
PERIODIC MAINTENANCE

"ALL BILLS ARE PAYABLE IN HOUSTON, TEXAS NET 10 DAYS. NO DISCOUNTS ALLOWED. WE RESERVE THE RIGHT TO CHARGE INTEREST ON ALL PAST DUE ACCOUNTS AT THE RATE OF 18% PER ANNUM OR THE MAXIMUM NONUSURIOUS RATE, WHICHEVER IS LESS."

SOLD TO:
HAWAII ELECTRIC LIGHT COMPANY
P.O. BOX 1027
54 HALEKAUILA ST
HILO HI 96720

SHIP TO:

UNIT SERIAL NUMBER	MODEL NUMBER	HOURS/MILES	DELIVERY DATE	SHIPPED VIA	WAY BILL NUMBER	STATUS

PART NUMBER	DESCRIPTION	QUANTITY	UNIT SALE	EXTENDED SALE
L21492P04	STG 2 BLADE	142.00	349.75	49,664.50
L21492P04	STG 2 BLADE	142.00	85.00	12,070.00
L21493P04	STG 3 BLADE	126.00	390.20	49,165.20
L21493P04	STG 3 BLADES	126.00	85.00	10,710.00
L21495P01	2ND NOZZLE INSUL	2.00	127.20	254.40
L21495P08	3RD NOZZLE INSUL	2.00	127.20	254.40
L21495P09	4TH NOZZLE INSUL	2.00	127.20	254.40
L21496P03	1ST NOZZLE INSUL	2.00	105.35	210.70
L21752G04	STG 2 NOZZLE	10.00	1,400.00	14,000.00
L21752G05	STG 2 NOZZLE	2.00	1,400.00	2,800.00
L21752G06	STG 2 NOZZLE	2.00	1,400.00	2,800.00
L21753G02	STG 3 NOZZLE	2.00	156.25	312.50
L21753P03	STG 3 NOZZLE	12.00	156.25	1,875.00
L21753P03	STG 3 NOZZLE	3.00	3,834.00	11,502.00
L21753P04	STG 3 NOZZLE	2.00	156.25	312.50
L35579P01	GASKET	1.00	481.90	481.90
L90100P01	BOLT, 1/4"X1-3/4"	100.00	1.14	114.00
MS9141-12	PACKING	2.00	5.50	11.00
MS9373035	GASKET, METAL	4.00	3.75	15.00
MS9373041	GASKET, METAL	1.00	4.45	4.45
MS9373051	GASKET, METAL	8.00	4.50	36.00
MS9373055	GASKET, METAL	3.00	5.10	15.30
MS949015	BOLT	8.00	.95	7.60
MS9568-04	BOLT	5.00	6.00	30.00
SSKIT002	KIT, SPLITLINE	1.00	7,110.00	7,110.00
133A1624P64	WASHER	90.00	1.05	94.50
59FK420	NUT, LOCK 1/4"	100.00	.87	87.00
612A225P1	WASHER	36.00	.02	.72
704B164P1	WASHER BALANCE	10.00	.08	.80
704B164P2	WASHER BALANCE	10.00	.08	.80
704B164P3	BROWNSVILLE WASHER BALANCE	10.00	HOUSTON .08	.80
705B813P2	BEAUMONT NUT	132.00	SAN ANTONIO .06	7.92
9083M19P05	CORPUS CHRISTI CONTAINER STG 1	166.00	WICHITA 3.25	539.50
9085M98P01	DALLAS BOLT	2.00	HARVEY 15.85	31.70
9102M48G03	STG 4 AIR SEAL	6.00	287.50	1,725.00
9109M72P05	NUT STG 2	14.00	5.78	80.92
9138M86P04	LOCK STG 2-6	108.00	12.95	1,398.60
9147M29P02	BOLT STG 2	14.00	9.65	135.10
9608M08G16	GASKET	1.00	5.61	5.61
9610M50P20	NUT	177.00	6.60	1,168.20

*** CONTINUED ON PAGE 3 ***

ALL INVOICE DISCREPANCIES MUST BE REPORTED, IN WRITING, TO STEWART & STEVENSON WITHIN TEN (10) DAYS OF RECEIPT. WE CANNOT ACCEPT MERCHANDISE RETURNED WITHOUT OUR PERMISSION. A MINIMUM HANDLING CHARGE OF 15% OF THE INVOICE PRICE WILL BE MADE ON ALL RETURNED MERCHANDISE.
PURCHASER AGREES TO ALL TERMS AND CONDITIONS AS STATED ON REVERSE SIDE.

TOTAL AMOUNT DUE

ORIGINAL

STEWART & STEVENSON SERVICES, INC.

REMITTANCE ONLY TO: P.O. BOX 200441 HOUSTON, TX 77216

INVOICE

PAGE: 3

CUSTOMER NO.	CUSTOMER P.O. NUMBER	OUR ORDER NO.	INVOICE DATE	BRANCH	INVOICE NUMB
9800945	54375	WC2788-007	5/31/95	24	2400286

NOTIFY SERVICING BRANCH FOR CORRESPONDENCE AND REFER TO OUR ORDER NUMBER

SERVICE ANYTIME, ANYWHERE
SALES • SERVICE • PARTS
RENTING—LEASING
PERIODIC MAINTENANCE

"ALL BILLS ARE PAYABLE IN HOUSTON, TEXAS NET 10 DAYS. NO DISCOUNTS ALLOWED. W RESERVE THE RIGHT TO CHARGE INTEREST O ALL PAST DUE ACCOUNTS AT THE RATE OF 18% PER ANNUM OR THE MAXIMUM NONUSURIOU RATE, WHICHEVER IS LESS."

SOLD TO
HAWAII ELECTRIC LIGHT COMPANY
P.O. BOX 1027
54 HALEKAUILA ST
HILO HI 96720

SHIP TO

UNIT SERIAL NUMBER	MODEL NUMBER	HOURS/MILES	DELIVERY DATE	SHIPPED VIA	WAY BILL NUMBER	STATU

PART NUMBER	DESCRIPTION	QUANTITY	UNIT SALE	EXTENDED SALE
9610M50P20	NUT	6.00	5.78	34.68
9610M50P21	NUT	28.00	8.25	231.00
9610M82P02	BOLT	2.00	13.10	26.20
9610M82P03	BOLT	2.00	13.10	26.20
9610M83P07	BOLT	2.00	11.40	22.80
9610M87P05	9610M87P05	300.00	6.60	1,980.00
9629M48P02	NUT	50.00	2.15	107.50
9629M48P04*	NUT	8.00	3.14	25.12
9629M79P16	GASKET	1.00	.94	.94
9632M29P05	BOLT	168.00	6.20	1,041.60
9632M29P08	BOLT	24.00	6.20	148.80
9632M29P10	BOLT	108.00	6.20	669.60
9632M34P01	PACKING	1.00	15.85	15.85
9632M38P08	1ST SHROUD INSUL	2.00	73.75	147.50
9632M38P09	2ND SHROUD INSUL	2.00	73.75	147.50
9632M38P10	3RD SHROUD INSUL	2.00	73.75	147.50
9632M76P01	WASHER STG 2-6	108.00	1.27	137.16
9632M85P02	WEIGHT BALANCE	10.00	32.30	323.00
9657M91P01	RIVET	1.00	7.95	7.95
9663M24G22	STG 3-SHROUD	1.00	1,170.00	1,170.00
9663M71P07	NUT-STG 2-5	202.00	4.95	999.90
9663M71P14	NUT-STG 2-3	66.00	4.75	313.50
9665M50P01	BOLT	8.00	6.60	52.80
9665M55P01	BOLT	16.00	5.60	89.60
9688M01P04	BOLT-STG-2	28.00	17.70	495.60
9688M03P01	SPRING WASHER	280.00	2.75	770.00
9688M04P01	2ND SHROUD SEAL	4.00	1.35	5.40
9688M04P02	3RD SHROUD SEAL	6.00	1.35	8.10
9688M04P03	2ND SHROUD SEAL	4.00	1.35	5.40
9688M04P04	3RD SHROUD SEAL	6.00	1.35	8.10
9688M04P05	BROWNSVILLE SHROUD SEAL	12.00	HOUSTON 1.35	16.20
9688M04P06	BEAUMONT 2ND SHROUD SEAL	26.00	SAN ANTONIO 1.35	35.10
9688M07P01	CORPUS CHRISTI 2ND NOZZLE SEAL	12.00	WICHITA FALLS 2.25	27.00
9688M07P02	DALLAS 3RD NOZZLE SEAL	14.00	HARVEY, LA. 2.25	31.50
9688M46P02	RETAINER STG 2	142.00	2.55	362.10
	PARTS TOTAL:			182,226.87
	MEALS	1.00	174.00	174.00

*** CONTINUED ON PAGE 4 ***

ALL INVOICE DISCREPANCIES MUST BE REPORTED, IN WRITING, TO STEWART & STEVENSON WITHIN TEN (10) DAYS OF RECEIPT. WE CANNOT ACCEPT MERCHANDISE RETURNED WITHOUT OUR PERMISSION. A MINIMUM HANDLING CHARGE OF 15% OF THE INVOICE PRICE WILL BE MADE ON ALL RETURNED MERCHANDISE.
PURCHASER AGREES TO ALL TERMS AND CONDITIONS AS STATED ON REVERSE SIDE.

TOTAL AMOUNT DUE

ORIGINAL

STEWART & STEVENSON SERVICES, INC.
REMITTANCE ONLY TO: P.O. BOX 200441 HOUSTON, TX 77216

INVOICE

PAGE: 4

CUSTOMER NO.	CUSTOMER P.O. NUMBER	OUR ORDER NO.	INVOICE DATE	BRANCH	INVOICE NUMBER
9800945	54375	WC2788-007	5/31/95	24	24002863

NOTIFY SERVICING BRANCH FOR CORRESPONDENCE AND REFER TO OUR ORDER NUMBER

SERVICE ANYTIME, ANYWHERE
SALES • SERVICE • PARTS
RENTING—LEASING
PERIODIC MAINTENANCE

"ALL BILLS ARE PAYABLE IN HOUSTON, TEXAS NET 10 DAYS. NO DISCOUNTS ALLOWED. WE RESERVE THE RIGHT TO CHARGE INTEREST ON ALL PAST DUE ACCOUNTS AT THE RATE OF 18% PER ANNUM OR THE MAXIMUM NONUSURIOUS RATE, WHICHEVER IS LESS."

SOLD TO:
HAWAII ELECTRIC LIGHT COMPANY
P.O. BOX 1027
54 HALEKAUILA ST
HILO HI 96720

SHIP TO:

UNIT SERIAL NUMBER	MODEL NUMBER	HOURS/MILES	SALESMAN'S CODE	SHIPPED VIA	WAY BILL NUMBER	STATUS

PART NUMBER	DESCRIPTION	QUANTITY	UNIT SALE	EXTENDED SALE
	MEALS	2.00	150.00	300.00
	MEALS	1.00	130.00	130.00
	HOTEL	1.00	673.65	673.65
	HOTEL	1.00	420.84	420.84
	HOTEL	1.00	425.09	425.09
	CAR RENTAL	1.00	81.09	81.09
	CAR RENTAL	1.00	225.09	225.09
	CAR RENTAL	1.00	126.80	126.80
	AIR TRAVEL	3.00	1,212.00	3,636.00
	AIR TRAVEL	1.00	1,270.00	1,270.00
	TRANSPORTATION	1.00	4,500.00	4,500.00
	FREIGHT CHARGES	1.00	67.75	67.75
	FREIGHT CHARGES	1.00	57.75	57.75
	FREIGHT CHARGES	1.00	38.50	38.50
	FREIGHT CHARGES	1.00	67.71	67.71
	FREIGHT CHARGES	1.00	76.82	76.82
	CABLE USA FREIGHT	1.00	3,300.00	3,300.00
	FEDERAL EXPRESS	1.00	105.30	105.30
	BAKERSFIELD LABOR	1.00	12,996.50	12,996.50
	HOUSTON LABOR	1.00	35,700.00	35,700.00

BROWNSVILLE HOUSTON
BEAUMONT SAN ANTONIO
CORPUS CHRISTI
DALLAS HARVEY, LA.

MISC. TOTAL: 64,372.89

*** CONTINUED ON PAGE 5 ***

ALL INVOICE DISCREPANCIES MUST BE REPORTED, IN WRITING, TO STEWART & STEVENSON WITHIN TEN (10) DAYS OF RECEIPT. WE CANNOT ACCEPT MERCHANDISE RETURNED WITHOUT OUR PERMISSION. A MINIMUM HANDLING CHARGE OF 15% OF THE INVOICE PRICE WILL BE MADE ON ALL RETURNED MERCHANDISE.
PURCHASER AGREES TO ALL TERMS AND CONDITIONS AS STATED ON REVERSE SIDE.

TOTAL AMOUNT DUE

ORIGINAL

STEWART & STEVENSON SERVICES, INC.
REMITTANCE ONLY TO: P.O. BOX 200441 HOUSTON, TX 77216

INVOICE

PAGE: 5

CUSTOMER NO.	CUSTOMER P.O. NUMBER	OUR ORDER NO.	INVOICE DATE	BRANCH	INVOICE NUMBER
9800945	54375	WC2788-007	5/31/95	24	24002863

NOTIFY SERVICING BRANCH FOR CORRESPONDENCE AND REFER TO OUR ORDER NUMBER

SERVICE ANYTIME, ANYWHERE
SALES • SERVICE • PARTS
RENTING—LEASING
PERIODIC MAINTENANCE

"ALL BILLS ARE PAYABLE IN HOUSTON, TEXAS, NET 10 DAYS. NO DISCOUNTS ALLOWED. WE RESERVE THE RIGHT TO CHARGE INTEREST ON ALL PAST DUE ACCOUNTS AT THE RATE OF 18% PER ANNUM OR THE MAXIMUM NONUSURIOUS RATE, WHICHEVER IS LESS."

SOLD TO
HAWAII ELECTRIC LIGHT COMPANY
P.O. BOX 1027
54 HALEKAUILA ST
HILO HI 96720

SHIP TO

UNIT SERIAL NUMBER	MODEL NUMBER	HOURS/MILES	SALESMAN'S CODE	SHIPPED VIA	WAY BILL NUMBER	STATUS

PART NUMBER	DESCRIPTION	QUANTITY	UNIT SALE	EXTENDED SALE
	** SUB TOTAL **			246,599.76

ORIGINAL

BROWNSVILLE
BEAUMONT
CORPUS CHRISTI
DALLAS

	R.A.	Acct./Sub-Acct. or WO No.	Obj. Code	Amount	
Mat. Rec'd					
Inv. Verified					
Appr. for Pmt.					

HOUSTON
SAN ANTONIO
WICHITA FALLS
HARVEY, LA.

ALL INVOICE DISCREPANCIES MUST BE REPORTED, IN WRITING, TO STEWART & STEVENSON WITHIN TEN (10) DAYS OF RECEIPT. WE CANNOT ACCEPT MERCHANDISE RETURNED WITHOUT OUR PERMISSION. A MINIMUM HANDLING CHARGE OF 15% OF THE INVOICE PRICE WILL BE MADE ON ALL RETURNED MERCHANDISE.
PURCHASER AGREES TO ALL TERMS AND CONDITIONS AS STATED ON REVERSE SIDE.

TOTAL AMOUNT DUE 246,599.76

ORIGINAL

INVOICE

DATE	INVOICE NUMBER	PAGE
10/18/96	951415	1

SALES CODE: US - US

STEWART & STEVENSON TECHNICAL SERVICES, INC.

REMITTANCE ONLY: P.O. BOX 200441 HOUSTON, TEXAS 77216

CORRESPONDENCE ONLY: 16415 JACINTOPORT BLVD., BLDG. "J" HOUSTON, TEXAS 77015

ADMINISTRATIVE & FINANCIAL (713) 457-7555
SALES (713) 457-7559

"ALL BILLS ARE PAYABLE IN HOUSTON, TEXAS, NET 10 DAYS. NO DISCOUNTS ALLOWED. WE RESERVE THE RIGHT TO CHARGE INTEREST ON ALL PAST DUE ACCOUNTS AT THE RATE OF 18% PER ANNUM OR THE MAXIMUM NONUSURIOUS RATE, WHICHEVER IS LESS."

RECEIVED BY
HAWAII ELECTRIC LIGHT CO. INC.
OCT 22 1996

SOLD TO:
HAWAII ELECTRIC LIGHT CO
54 HALEKAUILA STREET
P.O. BOX 1027
HILO HI 96720

SHIP TO:
980094
HAWAIIAN ELECTRIC CO., INC.
54 HALEKAUILA STREET
HILO HI

CUSTOMER NO.	CUSTOMER P.O.	SALES ORDER	QUOTE	BILL OF LADING	FREIGHT
9800945	58869	G22286			

SHIP VIA	TAX EXEMPT NO.	SALES REP
Best Way		STUTESMAN, R

ORDERED	SHIPPED	BACK ORDERED	DESCRIPTION	UNIT PRICE	AMOUNT
			THIS INVOICE COVERS THE REPAIR OF ONE (1) LM2500 POWER TURBINE. S/N 481-651		
			SEE ATTACHED SUMMARY DETAIL: SUB TOTAL $386,857.91; 10% DISCOUNT - 38,685.79; TOTAL $348,172.12		
			NOTE: 10 % DISCOUNT PER AGREEMENT BETWEEN PETE WATSON AND HELCO		
002 .001			LM2500 POWER TURBINE REV: UoM: EA	348172.1200	348.172.12
				RENTALS	- 139.57
				LABOR	- 1,452.11
				PER 11/14/96 C. UPTON	TELCON w/

ORIGINAL

	R.A.	Act./Subvent. or WO No.	Dep. ed	Amount
Mat. Rec'd	GP	55323G71	21	346,580.44
Inv. Verified				
Appr. for Dmt.				

FOB POINT OF SHIPMENT

SUBTOTAL 348,172.12

Sales Tax 346,580.4

Date Due 11/17/96 Total 348,172.12

5SS1032

WE CANNOT ACCEPT MERCHANDISE RETURNED WITHOUT OUR PERMISSION. A HANDLING CHARGE WILL BE MADE ON ALL RETURNED MERCHANDI

STEWART & STEVENSON TECHNICAL SERVICES, INC.

WO.NO. 803069 HELCO PT
S/N 481-651
POWER TURBINE STATOR
CONSUMABLES

PAGE NO. 1

10/18/96

ITEM	CF6	EXP	PART NUMBER	DESCRIPTION	PER ASY	QTY REQ	LIST EACH	SALE EACH	SALE EXT.
2			L47453G01	1ST NOZZLE INSUL	2	2	$1,238.00	$1,238.00	$2,476.00
41			L21495P09	4TH NOZZLE INSUL	2	2	$133.60	$133.60	$267.20
30			L21495P08	3RD NOZZLE INSUL	2	2	$133.60	$133.60	$267.20
9			L21495P01	2ND NOZZLE INSUL	2	2	$133.60	$133.60	$267.20
SL			J814P054A	BOLT	16	16	$8.85	$8.85	$141.60
SL	6		J645P13A	BOLT	12	12	$4.40	$4.84	$58.08
SL	6		J644P17A	BOLT	24	24	$4.60	$5.06	$121.44
SL	6		J644P15A	BOLT	16	16	$2.75	$3.03	$48.40
SL	6		J644P13A	BOLT	124	124	$3.15	$3.47	$429.68
SL	6		J644P21A	BOLT	4	4	$3.75	$4.13	$16.50
SL	6		J644P19A	BOLT	6	6	$4.25	$4.68	$28.05
SL	6		J644P11B	BOLT	8	8	$4.40	$4.84	$38.72
SL	6		J334P12A	BOLT, S/B-092	37	37	$4.55	$5.01	$185.19
SL	6		J334P16B	BOLT, S/B-092	12	12	$7.00	$7.70	$92.40
SL	6		J334P21A	BOLT, S/B-092	6	6	$39.60	$43.56	$261.36
SL	6		J334P23A	BOLT, S/B-092	6	6	$39.60	$43.56	$261.36
SL			J158P162A	STUD	16	16	$26.75	$26.75	$428.00
SL			J158P156A	STUD	16	16	$27.30	$27.30	$436.80
SL			J158P013A	STUD	16	16	$29.20	$29.20	$467.20
SL			J158P006A	STUD	27	27	$18.85	$18.85	$508.95
5			9688M20P02	COVER SEGEMENT	2	2	$59.80	$59.80	$119.60
4			9688M20P01	COVER SEGEMENT	2	2	$59.80	$59.80	$119.60
34			9688M07P02	3RD NOZZLE SEAL	14	14	$2.40	$2.40	$33.60
13			9688M07P01	2ND NOZZLE SEAL	12	12	$2.40	$2.40	$28.80
29			9688M04P06	2ND SHROUD SEAL	26	26	$1.45	$1.45	$37.70
8			9688M04P05	1ST SHROUD SEAL	12	12	$1.45	$1.45	$17.40
38			9688M04P04	3RD SHROUD SEAL	6	6	$1.45	$1.45	$8.70
21			9688M04P03	2ND SHROUD SEAL	4	4	$1.45	$1.45	$5.80
37A			9688M04P02	3RD SHROUD SEAL	6	6	$1.45	$1.45	$8.70
20			9688M04P01	2ND SHROUD SEAL	4	4	$1.45	$1.45	$5.80
25			9688M03P01	SPRING WASHER	280	280	$2.90	$2.90	$812.00
24			9688M01P04	BOLT STG 2	28	28	$18.60	$18.60	$520.80
24			9688M01P03	BOLT STG 3&4	38	38	$18.60	$18.60	$706.80
SL			9665M55P01	BOLT	14	14	$5.90	$5.90	$82.60
SL	6		9665M50P01	BOLT	8	8	$6.25	$6.88	$55.00
3			9663M72G04	COVER SEGEMENT	12	12	$75.50	$75.50	$906.00
26			9663M71P14	NUT STG 2,3 & 4	66	66	$5.00	$5.00	$330.00
57	6		9663M71P07	NUT STG 2-6	108	108	$4.70	$5.17	$558.36
SL	6		9663M71P07	NUT	94	94	$4.70	$5.17	$485.98
56	6		9632M76P01	WASHER STG 2-6	108	108	$1.20	$1.32	$142.56
39			9632M38P10	3RD SHROUD INSUL	2	2	$77.45	$77.45	$154.90
27			9632M38P09	2ND SHROUD INSUL	2	2	$77.45	$77.45	$154.90
6			L47457G01	1ST SHROUD INSUL	2	2	$757.00	$757.00	$1,514.00
47			9632M38P11	4TH SHROUD INSUL	2	2	$77.45	$77.45	$154.90
SL			9629M48P02	NUT	50	50	$2.30	$2.30	$115.00
SL			9610M83P07	BOLT	2	2	$12.00	$12.00	$24.00
SL			9610M82P03	BOLT	2	2	$13.75	$13.75	$27.50
SL			9610M82P02	BOLT	2	2	$13.75	$13.75	$27.50
SL	6		9610M50P21	NUT	28	28	$7.75	$8.53	$238.70
SL			9610M50P20	NUT	97	97	$6.25	$6.25	$606.25
SL	6		9610M50P20	NUT	36	36	$6.25	$6.88	$247.50
22			9147M29P02	BOLT STG 2	14	14	$10.15	$10.15	$142.10
45	6		9147M29P01	BOLT STG 3,4,5&6	160	160	$7.75	$8.53	$1,364.00
55			9138M86P04	LOCK STG 2-6	108	108	$13.60	$13.60	$1,468.80
23	6		9109M72P05	NUT STG 2	14	14	$5.25	$5.78	$80.85
46	6		9109M72P05	NUT STG 3,4,5&6	160	160	$5.25	$5.78	$924.00
SL			9085M98P01	BOLT	2	2	$16.65	$16.65	$33.30
SL			133A1624P64	WASHER	90	90	$1.10	$1.10	$99.00

"SL" = SPLITLINE HARDWARE
REF GEK 50336 FIG 34

SECTION TOTAL	$19,164.31

STEWART & STEVENSON TECHNICAL SERVICES, INC.

WO.NO. 803069 HELCO PT
S/N 481-651
POWER TURBINE STATOR

PAGE NO. 2

10/18/96

CAPITAL CONSUMABLES

ITEM	CF6	EXP	PART NUMBER	DESCRIPTION	PER ASY	QTY REQ	LIST EACH	SALE EACH	SALE EXT.
45			L21751G01	STG 1 NOZ PtAl	14	14	$6,471.00	$5,471.00	$76,594.00
14			9102M46G04	STG 2 AIR SEAL	2	2	$1,851.00	$1,851.00	$3,702.00
15			9102M46G05	STG 2 AIR SEAL	2	2	$1,851.00	$1,851.00	$3,702.00
16			9102M46G06	STG 2 AIR SEAL	2	2	$1,851.00	$1,851.00	$3,702.00
						SECTION TOTAL			$87,700.00

REF GEK 50336 FIG 34

POWER TURBINE STATOR
REPAIRS

ITEM	CF6	EXP	PART NUMBER	DESCRIPTION	PER ASY	QTY REQ	LIST EACH	SALE EACH	SALE EXT.
1			9663M17G08	LPT CASES	1	1	$6,200.00	$7,750.00	$7,750.00
35			9102M47G04	STG 3 AIR SEAL	2	1	$275.00	$343.75	$343.75
36			9102M47G05	STG 3 AIR SEAL	4	2	$275.00	$343.75	$687.50
44			9102M48G04	STG 4 AIR SEAL	2	2	$255.00	$318.75	$637.50
10			L21752G04	STG 2 NOZZLE	10	10	$847.65	$1,059.56	$10,595.63
11			L21752G05	STG 2 NOZZLE	2	2	$847.65	$1,059.56	$2,119.13
12			L21752G06	STG 2 NOZZLE	2	2	$847.65	$1,059.56	$2,119.13
31			L21753P03	STG 3 NOZZLE	12	12	$847.65	$1,059.56	$12,714.75
32			L21753P04	STG 3 NOZZLE	2	2	$847.65	$1,059.56	$2,119.13
33			L21753G02	STG 3 NOZZLE	2	2	$847.65	$1,059.56	$2,119.13
42			9663M04P04	STG 4 NOZZLE	54	41	$110.00	$137.50	$5,637.50
42			9663M04P04	STG 4 NOZZLE	54	13	$275.00	$343.75	$4,468.75
49			9663M05P05	STG 5 NOZZLE	48	43	$110.00	$137.50	$5,912.50
49			9663M05P05	STG 5 NOZZLE	48	5	$275.00	$343.75	$1,718.75
						SECTION TOTAL			$58,943.13

REF GEK 50336 FIG 34

STEWART & STEVENSON TECHNICAL SERVICES, INC.

WO.NO. 803068 HELCO PT — PAGE NO. 3 — 10/18/96

S/N 481-651
POWER TURBINE ROTOR
CONSUMABLES

ITEM	CF6	EXP	PART NUMBER	DESCRIPTION	PER ASY	QTY REQ	LIST EACH	SALE EACH	SALE EXT.
47			612A225P1	WASHER	36	36	$0.02	$0.02	$0.72
6	6		704B164P1	WASHER BALANCE	10	10	$0.20	$0.22	$2.20
6	6		704B164P2	WASHER BALANCE	10	10	$0.10	$0.11	$1.10
6	6		704B164P3	WASHER BALANCE	10	10	$0.10	$0.11	$1.10
55A	6		705B813P2	NUT	44	44	$0.10	$0.11	$4.84
30	6		705B813P2	NUT	108	108	$0.10	$0.11	$11.88
18			9010M36P02	SEAL RET. RING	1	1	$23.00	$23.00	$23.00
9	6		9083M19P05	RETAINER STG 1	166	166	$2.95	$3.25	$538.67
32	6		9083M19P06	RET STG 3 & 4	238	238	$3.05	$3.36	$798.49
39	6		9083M19P07	RET STG 5	90	90	$6.65	$6.22	$559.35
52	6		9083M19P08	RET STG 6	72	72	$3.05	$3.36	$241.56
48A	6		9107M17P01	RIVET	1	1	$14.15	$15.57	$15.57
58	6		9610M50P20	BOLT	8	8	$6.25	$6.88	$55.00
48	6		9610M50P20	NUT	36	36	$6.25	$6.88	$247.50
5	6		9610M87P05	NUT	300	300	$6.25	$6.88	$2,062.50
5	6		9610M87P05	NUT, STIG	68	68	$6.25	$6.88	$467.50
4			9632M29P05	BOLT	192	192	$6.55	$6.55	$1,257.60
55			9632M29P08	BOLT	24	24	$6.55	$6.55	$157.20
29			9632M29P10	BOLT	108	108	$6.55	$6.55	$707.40
29			9632M29P10	BOLT, STIG	44	44	$6.55	$6.55	$288.20
22			9632M34P01	PACKING	1	1	$16.65	$16.65	$16.65
7			9632M85P02	WEIGHT BALANCE	10	10	$33.95	$33.95	$339.50
19			9657M91P01	RIVET	1	1	$10.75	$10.75	$10.75
11			9688M46P02	RETAINER STG 2	142	142	$2.70	$2.70	$383.40
27	6		J626P03	NUT	15	15	$2.15	$2.37	$35.48
21	6		J627P03	NUT	36	36	$1.75	$1.93	$69.30
20	6		J643P14E	BOLT	36	36	$3.20	$3.52	$126.72
26			J643P23A	BOLT	15	15	$4.60	$4.60	$69.00
46	6		J644P14A	BOLT	36	36	$3.20	$3.52	$126.72
57	6		J644P19A	BOLT	8	8	$4.25	$4.68	$37.40
15	6		MS9565-04	BOLT	4	4	$6.70	$7.37	$29.48
54			MS9568-04	BOLT	5	5	$6.30	$6.30	$31.50

REF GEK 50336 FIG 33 — SECTION TOTAL $8,717.27

POWER TURBINE ROTOR
CAPITAL CONSUMABLES

ITEM	CF6	EXP	PART NUMBER	DESCRIPTION	PER ASY	QTY REQ	LIST EACH	SALE EACH	SALE EXT.
8			L21491P03	STG 1 BLADE	166	45	$410.40	$410.40	$18,468.00
10			L21492P04	STG 2 BLADE	142	15	$391.55	$391.55	$5,873.25
31			L21493P07	STG 3 BLADE	126	1	$409.75	$409.75	$409.75

REF GEK 50336 FIG 33 — SECTION TOTAL $24,751.00

POWER TURBINE ROTOR
REPAIRS

ITEM	CF6	EXP	PART NUMBER	DESCRIPTION	PER ASY	QTY REQ	LIST EACH	SALE EACH	SALE EXT.
31			L21493P04	STG 3 BLADES	126	126	$160.00	$200.00	$25,200.00
10			L21492P04	STG 2 BLADES	142	142	$160.00	$200.00	$28,400.00
8			L21491P03	STG 1 BLADES	166	166	$160.00	$200.00	$33,200.00
35			9663M14P21	STG 4 BLADES	112	112	$59.00	$73.75	$8,260.00
38			9102M35P07	STG 5 BLADES	90	90	$59.00	$73.75	$6,637.50
51			9102M36P07	STG 6 BLADES	72	72	$59.00	$73.75	$5,310.00
49			9688M19P02	STG 6 SEAL	1	1	$2,295.00	$2,868.75	$2,868.75
33			9688M17P04	STG 4 SEAL	1	1	$2,295.00	$2,868.75	$2,868.75
12			9688M16P05	STG 3 SEAL	1	1	$2,295.00	$2,868.75	$2,868.75
2			9688M15P05	STG 2 SEAL	1	1	$2,295.00	$2,868.75	$2,868.75
23			9632M97G03	SHIELD ASSY	1	1	$520.00	$650.00	$650.00
5			L16595G02	#7ROT AIR/OIL SEAL	1	1	$3,400.00	$4,250.00	$4,250.00
36			5395M67P01	STG 5 SEAL	1	1	$2,295.00	$2,868.75	$2,868.75

REF GEK 50336 FIG 33 & 36 — SECTION TOTAL $126,251.25

STEWART & STEVENSON TECHNICAL SERVICES, INC.

WO.NO. 803069 HELCO PT
S/N 481-651
TURBINE REAR FRAME

10/18/96

CONSUMABLES

ITEM	CF6	EXP	PART NUMBER	DESCRIPTION	PER ASY	QTY REQ	LIST EACH	SALE EACH	SALE EXT.
–			MS9141-12	PACKING	2	2	$6.20	$6.20	$12.40
–			MS51960-86	SCREW	9	9	$5.25	$5.25	$47.25
–			L31909P01	INSULATION, TRF	1	1	$345.30	$345.30	$345.30
–			L31908P01	INSULATION, TRF	1	1	$345.30	$345.30	$345.30
–			L31907P01	INSULATION, TRF	1	1	$345.30	$345.30	$345.30
–			L31906P01	INSULATION, TRF	1	1	$345.30	$345.30	$345.30
–			L16566G01	GANG NUT	3	3	$536.00	$536.00	$1,608.00
30			L16520P02	GASKET	2	2	$8.95	$8.95	$17.90
36			L16503P01	RET RING	1	1	$41.05	$41.05	$41.05
–			L14522P02	GASKET	1	1	$0.80	$0.80	$0.80
–			L14520P01	SHIM PACK	2	2	$12.25	$12.25	$24.50
–			L14517P01	GASKET	2	2	$1.35	$1.35	$2.70
–			L14317P02	GASKET	1	1	$0.75	$0.75	$0.75
17	6		J645P16A	BOLT	15	15	$18.00	$19.80	$297.00
–			J645P05B	BOLT	1	1	$19.10	$19.10	$19.10
33			J644P23C	BOLT	36	36	$5.20	$5.20	$187.20
31	6		J644P11D	BOLT	40	40	$6.25	$6.88	$275.00
3	6		J644P11D	BOLT	60	60	$6.25	$6.88	$412.50
6			J644P11C	BOLT	48	48	$2.35	$2.35	$112.80
9	6		J644P11A	BOLT	42	42	$3.05	$3.36	$140.91
11	6		J644P08B	BOLT	24	24	$6.25	$6.88	$165.00
–	6		J644P07B	BOLT	6	6	$4.10	$4.51	$27.06
–	6		J644P05B	BOLT	5	5	$4.10	$4.51	$22.55
–	6		J643P05B	BOLT	12	12	$4.85	$5.34	$64.02
–			J221P140	PACKING	2	2	$1.35	$1.35	$2.70
12			J221P110B	PACKING	2	2	$20.90	$20.90	$41.80
–	6		J221P020	PACKING	4	4	$0.55	$0.55	$2.20
38			MS9360-11	NUT	2	2	$9.05	$9.05	$18.10
57			9115M43P01	BOLTS	2	2	$10.00	$10.00	$20.00
7	6		J198P02	NUT	84	84	$1.60	$1.76	$147.84
–			AN123444	RIVET	30	30	$1.35	$1.35	$40.50
–			AN123443	RIVET	30	30	$1.05	$1.05	$31.50
–			AN123442	RIVET	20	20	$1.10	$1.10	$22.00
25	6		9648M78P11	RET RING	1	1	$124.80	$137.28	$137.28
–	6		9610M50P20	NUT	6	6	$6.25	$6.88	$41.25
13	6		9607M05P18	PACKING	2	2	$41.00	$45.10	$90.20
–			9109M91P01	BOLT	6	6	$3.15	$3.15	$18.90
18	6		635E901P01	NUT	15	15	$7.50	$8.25	$123.75

REF GEK 50336 FIG 35/36 — SECTION TOTAL $5,697.71

TURBINE REAR FRAME
CAPITAL CONSUMABLES

ITEM	CF6	EXP	PART NUMBER	DESCRIPTION	PER ASY	QTY REQ	LIST EACH	SALE EACH	SALE EXT.
34			L16500P02	#7 BRG SEAL NUT	1	1	$2,167.00	$2,167.00	$2,167.00

REF GEK 50336 FIG 35/36 — SECTION TOTAL $2,167.00

TURBINE REAR FRAME
REPAIRS

ITEM	CF6	EXP	PART NUMBER	DESCRIPTION	PER ASY	QTY REQ	LIST EACH	SALE EACH	SALE EXT.
2			L16712G06	BAL. PISTON SEAL	1	1	$2,175.00	$2,718.75	$2,718.75
4			L16710G06	STA AIR SEAL	1	1	$2,175.00	$2,718.75	$2,718.75
14			L14405P02	#7B BRG SUPPORT	1	1	$75.00	$93.75	$93.75
8			L14421G02	FWD STA AIR SEAL	1	1	$1,357.00	$1,696.25	$1,696.25
10			L14423P03	FWD STA OIL SEAL	1	1	$1,357.00	$1,696.25	$1,696.25
29			L14408G05	AFT STA OIL SEAL	1	1	$1,357.00	$1,696.25	$1,696.25
32			L14409G02	AFT AIR SEAL	1	1	$1,357.00	$1,696.25	$1,696.25

REF GEK 50336 FIG 35/36 — SECTION TOTAL $12,316.25

STEWART & STEVENSON TECHNICAL SERVICES, INC.

WO.NO. 803069 HELCO PT
S/N 481-651

PAGE NO. 5

10/18/96

SERVICE BULLETINS

LM2500-IND-092
TMF / POWER TURBINE FLNG BOL

ITEM	CF6	EXP PART NUMBER	DESCRIPTION	PER ASY	QTY REQ	LIST EACH	SALE EACH	SALE EXT.
SL		J334P12A	BOLT	37	0	$4.55	$4.55	$0.00
SL		J334P16B	BOLT	13	0	$7.00	$7.00	$0.00
SL		J334P21A	BOLT	6	0	$39.60	$39.60	$0.00
SL		J334P23A	BOLT	6	0	$39.60	$39.60	$0.00

BEING COMPLIED WITH IN POWER TURBINE STATOR CONSUMABLES

STEWART & STEVENSON TECHNICAL SERVICES, INC.

WO.NO. 803069 HELCO PT
S/N 481-651

PAGE NO. 6

10/18/96

PRICING SECTION

TOTAL CONSUMABLES	$33,479.29
TOTAL CAPITAL CONSUMABLES	$114,618.00
TOTAL REPAIRS	$197,510.63
SERVICE BULLETINS	$0.00
LABOR ($55 / hr. X 650 hrs.)	$35,750.00
TRANSPORTATION EST	$5,500.00
GRAND TOTAL	$386,857.91

Verbanic, Norman

From: Canon, James T (GE Infra, Energy) [james.canon@ge.com]
Sent: Tuesday, September 12, 2006 10:51 AM
To: Verbanic, Norman
Cc: Ellis, Scott; Wood, Grant
Subject: HELCO - LM2500 PT Questions

Dear Norman,

Scott Ellis contacted me with your questions regarding the PT on the LM2500. I think I've got them covered below:

Q.: Please advise if GE has rotable LPT's for LM 2500's or if only repairs are done.

A: Yes, GE provides rotable exchanges for the LM2500 PT.

Q: Please provide pricing for a rotable and/or lease unit.

A: List Price for New PT is $1,200,000. List for Overhauled PT is $1,040,000. Some discount is typically given off of list. I'd want to understand more about when you're thinking about doing the work before committing to a discount level.

For the exchange, we typically would value your used PT at between $200,000 and $300,000, depending on the condition of the PT.

Regarding the Lease Asset question -

Annual Fees for a Liquid Fueled, Water Injected unit are:
GG Alone $81,100
PT Alone $18,900
GT Combined $100,800

Weekly Usage Fees
GG Alone 1-10 week rate is $14,175 over 10 week rate is $22,785
PT Alone 1-10 week rate is $2,394; over 10 week rate is $3,780
GT Combined 1-10 week rate is $16,170; over 10 week rate is $26,040

Q: What would a complete overhaul run for a customers' LPT?

A: Typical overhaul is $500,000 - $600,000, depending on fall-out.

Q. What is expected lifetime (service hours) of an LPT before major work is required based on low cycle fatigue or other operational constraining issue, considering that there has not been any DOD/FOD.

A: Typically, PT overhauls are performed at 50,000 hours. The PT, along with the rest of the GT, is serviced "on-condition." Some sites have been able to stretch longer than 50,000 hours. It really depends on what your borescope is telling you.

I hope that helps. By the way, has your phone number changed? The one that I have on file doesn't seem to work. I'd appreciate your sending my any updated contact information that you have.

Please don't hesitate to call me with any questions. My number has changed too.... 425-450-5089 (office) or 253-468-4877 (cell).

Kind Regards,
Jim Canon

Hawaii Electric Light Company, Inc.				
2006 Test Year Rate Case				
Keahole CT Run Hours		as of 9/1/06		
	CT4 annual hrs	cummulative	CT5 annual hrs	cummulative
Actual 2004	2339		1858	
Actual 2005	4682	7021	4283	6141
1/06 - 8/06 Actual	3507	10528	2539	8680
Est 9/06-12/06	1753	12281	1302	9982
2007	5261	17542	3841	13823
2008	5261	22803	3841	17664
2009	6000	28803	6000	23664
2010	6000	34803	6000	29664
2011	6000	40803	6000	35664
2012	6000	46803	6000	41664
2013	6000	52803	6000	47664
2014	6000	58803	6000	53664
2015	6000	64803	6000	59664
January	537:48:00		323:03:00	
February	420:19:00		292:39:00	
March	363:44:00		256:59:00	
April	323:54:00		267:42:00	
May	371:11:00		283:01:00	
June	346:57:00		265:21:00	
July	509:23:00		424:56:00	
August	634:14:00		425:31:00	
Sept estimate	438:26:15		324:03:00	
October estimate	438:26:15		325:03:00	
November estimate	438:26:15		326:03:00	
December estimate	438:26:15		327:03:00	
2006 est. hrs	5261:15:00		3841:24:00	

CA-IR-259

Ref: HELCO T-5, page 59, line 9; diesel overhauls.

According to the testimony, "two diesel overhauls are shown to occur on the normalized overhaul schedule." Please indicate the dates and times on which each diesel unit was overhauled and provide the amounts spent performing the overhaul for each diesel unit in each of the past five years.

HELCO Response:

As stated in the testimony, "two diesel overhauls are shown to occur on the normalized overhaul schedule." This refers to overhauls of the diesel swing engine and an overhaul of one disbursed generation unit.

The Electromotive Diesel (EMD) diesel swing engine (purchased in January 1992) is used to replace a permanently installed engine on a temporary basis when the diesel engine is being overhauled. It is currently being overhauled by the Kanoelehua CT&D group (responsibility area "HGX") for most of 2006. Charges are shown on Attachment 1 of the response to CA-IR-254, in project H0001218 on page 3. This is the first time this unit has been overhauled since joining the HELCO fleet.

One diesel overhaul for a disbursed generation unit was normalized into the test year. Disbursed generation unit overhauls were budgeted in 2005 and 2006, but with the existing unit run hours at approximately 1000 hours each, work of this magnitude was not performed in 2005 and will not be performed this year, as explained above. Thus, an adjustment of ($75,000) is being proposed to the Normalized Test Year. See CA-IR-256 for more information on the dispersed diesels.

CA-IR-260

Ref: HELCO Response to CA-IR-58, Attachment 1; Weekly Maintenance Report.

Please provide complete copies of the "HELCO Weekly Maintenance Report" for all available months of 2006 to-date.

HELCO Response:

See Attachment 1. The requested information is confidential and will be provided pursuant to Protective Order No. 22593, dated June 30, 2006. Because the requested information is voluminous, it is available for inspection at HECO's Regulatory Affairs Division office, Suite 1301, Central Pacific Plaza, 220 South King Street, Honolulu, Hawaii. Please contact Dean Matsuura at 543-4622 to make arrangements to inspect the requested information.

The requested information is confidential and will be provided pursuant to Protective Order No. 22593, dated June 30, 2006. Because the requested information is voluminous, it is available for inspection at HECO's Regulatory Affairs Division office, Suite 1301, Central Pacific Plaza, 220 South King Street, Honolulu, Hawaii. Please contact Dean Matsuura at 543-4622 to make arrangements to inspect the requested information.

CA-IR-261

Ref: HELCO-539, page 2 and HELCO Response to CA-IR-69, Attachment 1; Straight Time Hours Expense versus Capital.

Please explain why, in each historical year 2003, 2004 and 2005, O&M TOTAL hours represented 84.4% to 85.5% of TOTAL Straight-time hours for the indicated production RAs, but in the test year, HELCO-539 indicates test year budgeted Straight-time hours would be charged 91.1% to expense (193,292/212,160 = 91.1%). Provide complete copies of all analyses, workpapers and other documents supportive of your response.

HELCO Response:

The following correction needs to be made to these IR's questioning "Straight Time Hours Expense versus Capital." HELCO-539, page 2 shows "O&M Hrs" versus "All Oth Hrs." The "All Oth Hrs" here represent O&M project budgeted labor hours for 2006. Capital projects rarely are budgeted for labor hours, and there are no capital labor hours budgeted in 2006. At budget preparation, all costs budgeted for a capital project are shown in equipment, materials and/or outside services. It is difficult to know how much time a project manager will spend, and in addition, it is often indeterminate whether the work will be done "in-house" by HELCO maintenance (who would charge labor hours) or by outside contractors.

On the other hand, "All Oth Hrs" shown on HELCO Response to CA-IR-69, Attachment 1, represents actual project labor hours for both O&M and capital in 2003, 2004 and 2005. For the reasons discussed above, there is a ratio difference. Labor workpapers and support were provided in response to CA-IR-1. An adjustment to the test year labor dollars will be made in order to reflect that some of the labor hours will be spent on capital projects. See response to CA-IR-409. The adjustment represents 3.3% of the total labor hours (274,295 total hours per CA-IR-402, Attachment 1), or 9,052 hours.

CA-IR-262

Ref: T-6, page 9, HELCO responses to CA-IR-86 & CA-IR-87 (T&D Overtime & Contractors).

Part (c) of the response to CA-IR-87 sought the historical distribution of straight time and overtime hours between O&M and non-O&M accounts for the period 2000-2005 (actual) and 2006 forecast. The referenced response indicates that "the exact allocation of straight time and overtime hours between O&M and non-O&M accounts" is not available because standard labor rates are used to cost the individual accounts. However, the response refers to HELCO T-6's response to CA-IR-1, part b, page 237 for the historical percentage allocation between O&M, Capital and Clearing on which the 2006 forecast was based. The response to CA-IR-87(c) is unclear in the context of the use of standard labor rates. Please provide the following:

a. Please confirm that HELCO employees are required to complete time sheets or time cards assigning actual hours worked to specific projects, tasks or work responsibilities. If this cannot be confirmed, please explain why not.

b. Please provide a detailed explanation of how the use of standard labor rates (i.e., the process of converting work hours into labor dollars) has any impact on whether employee work hours are attributable to O&M or non-O&M activity.

c. By referring to the use of standard labor rates in the referenced response, was it HELCO's intent to indicate that the Company is unable to separately provide a distribution of straight time hours and overtime hours between O&M and non-O&M accounts but can provide a distribution of total hours between O&M and non-O&M accounts? Please explain.

HELCO Response:

a. Yes, employees do complete time sheets with actual hours worked assigned to specific projects, tasks or work responsibilities.

b. The use of standard labor rates does not impact the ability to attribute employee work hours to O&M or non-O&M activity.

c. Yes, it was the Company's intent to indicate that the Company is unable to separately provide a distribution of straight time hours and overtime hours between O&M and non-O&M accounts but can provide a distribution of total hours between O&M and non-O&M accounts.

CA-IR-263

Ref: T-6, page 19, HELCO-WP-612 & response to CA-IR-92 (T&D Tree Trimming).

The referenced response provided actual tree/brush timing expense by NARUC account for 2001-2005 and referred to HELCO-WP-612, page 2, for comparable test year forecast information. Please provide the following:

a. Please confirm that the actual expenses provided in response to CA-IR-92(a) include direct labor, direct non-labor and oncost (both DL and NL) amounts. If this cannot be confirmed, please explain.

b. Please provide a further breakdown of the actual tree/brush timing expense supplied in response to CA-IR-92(a) between direct labor, direct non-labor and direct labor oncost and direct non-labor oncost. If the requested information is not available, please explain.

HELCO Response:

a. Yes, the actual expenses provided in response to CA-IR-92(a) include direct labor, direct non-labor and on-cost (both DL and NL) amounts.

b. The requested information is attached as page 2.

Hawaii Electric Light Company, Inc.
Vegetation Management
TY 2006 Rate Case
Part b.

ACCT	Activity	Report	2001 Recorded	2002 Recorded	2003 Recorded	2004 Recorded	2005 Recorded	2006 Test Year
571 Transmission								
Direct Labor	355	L1R	9,425	9,535	6,992	7,948	15,437	9,195
Direct Non-Labor	355	N2R	245,440	220,250	167,799	267,705	142,877	276,390
Labor Oncost	355	O1R	1,144	1,107	786	814	1,548	1,136
Non-Labor Oncost	355	O2R	8,742	7,630	8,652	7,590	17,387	13,865
			264,751	238,522	184,229	284,057	177,249	300,586
593 Distribution								
Direct Labor	494	L1R	43,074	56,327	51,679	43,497	65,137	53,499
Direct Non-Labor	494	N2R	832,231	1,197,179	773,697	802,266	1,405,088	1,191,762
Labor Oncost	494	O1R	5,247	6,234	5,498	4,579	6,702	6,605
Non-Labor Oncost	494	O2R	39,022	43,124	59,304	44,211	77,206	80,660
			919,574	1,302,864	890,178	894,553	1,554,133	1,332,526

Note: There is a slight difference between CA-IR-92 and CA-IR-263 due to rounding.

CA-IR-264

Ref: T-6, page 62, HELCO-619 & response to CA-IR-90 (T&D Contract Labor).

In response to CA-IR-90(d), HELCO indicated that the information is not available to revise HELCO-619, page 2, so as to provide a historical comparison of all Distribution contract service amounts by contractor. Please provide the following:

a. Recognizing that the requested information is not available by contractor, does information exist to enable HELCO to provide a historical comparison for calendar years 2000-2005 of all Distribution contract service amounts by type or category of contract service (e.g., vegetation maintenance, line maintenance, substation maintenance, pole replacement, line construction, substation construction, etc.)? Please explain.

b. Referring to the response to part (a) above, please provide a historical comparison for calendar years 2000-2005 of all Distribution contract service amounts by type or category of contract service, showing amounts separately for transmission and distribution, as well as denoting expense and capital amounts.

HELCO Response:

a. The requested information is voluminous and is available for inspection at HECO's Regulatory Affairs Division office, Suite 1301, Central Pacific Plaza, 220 South King Street, Honolulu, Hawaii. Please contact Dean Matsuura at 543-4622 to make arrangements to inspect the requested information.

The report supplies recorded contract service amounts for the Distribution Department for years 2001 to 2005. The information in the report is organized by block of accounts, accounts, Department, RA, activity, location and expense element. The report captures information from all block of accounts and is not limited to Transmission and Distribution block of accounts. The report captures all contract service amounts with expense elements that range from 501-508. The expense elements 501-508 denote outside services general, outside services legal, outside services temporary hire, outside services construction, outside services engineering and outside services environmental. The report captures contract

services amounts for all indicator codes such as O&M, Capital, Clearing, etc. See page 3 of this response for an Excel worksheet which summarizes the total recorded contract services costs for the Distribution Department for 2000 to 2005 by account block.

b. The requested information was provided in part a.

Hawaii Electric Company, Inc.
2006 TY rate case - Summary Report - Recorded 2000 to 2005 Distribution Department Contract Services Costs

Account Block	Account Group	Acct Group Desc	2000 Recorded	2001 Recorded	2002 Recorded	2003 Recorded	2004 Recorded	2005 Recorded
A & G Maintenance	G30	O&M	8,546	20,154	12,637	152	3,835	344
	G30	O&M	-	25,618	27,097	31,559	24,189	23,409
A & G Maintenance Total			**8,546**	**45,772**	**39,735**	**31,711**	**28,024**	**23,753**
A & G Operation	G30	O&M	12,244	5,590	12,207	3,949	31,490	9,918
	G30	O&M	6,368	1,029	2,257	513	2,399	234
A & G Operation Total			**18,612**	**6,619**	**14,464**	**4,462**	**33,889**	**10,152**
Charges to Clearing Accounts	G80	Chgs to Clrg	122,398	107,521	87,928	109,115	116,456	148,270
	G80	Chgs to Clrg	242,506	228,975	7,067	30,745	19,146	58,986
Charges to Clearing Accounts Total			**364,904**	**336,496**	**94,995**	**139,860**	**135,602**	**207,256**
Construction	G50	CWIP	2,103,737	865,960	1,364,523	2,053,029	2,803,208	8,014,995
	G50	CWIP	1,135,711	1,097,063	848,328	1,202,538	1,657,947	1,200,118
Construction Total			**3,239,448**	**1,963,023**	**2,212,851**	**3,255,568**	**4,461,155**	**9,215,113**
Customer Accounts	G30	O&M	5,685	468	107	125	125	83
	G30	O&M	20,026	203	-	-	-	-
Customer Accounts Total			**25,711**	**671**	**107**	**125**	**125**	**83**
Distribution Maintenance	G30	O&M	1,178,997	905,941	1,390,513	977,348	1,173,195	1,739,554
	G30	O&M	65,754	39,189	210,509	142,894	212,013	191,278
Distribution Maintenance Total			**1,244,751**	**945,131**	**1,601,022**	**1,120,242**	**1,385,209**	**1,930,832**
Distribution Operation	G30	O&M	42,343	42,855	52,044	102,066	54,596	164,257
	G30	O&M	19,070	18,621	103,178	31,553	9,086	250,236
Distribution Operation Total			**61,413**	**61,476**	**155,222**	**133,619**	**63,682**	**414,493**
Intercompany	G60	Billable	6,083	-	-	-	-	-
Intercompany Total			**6,083**	**-**	**-**	**-**	**-**	**-**
Miscellaneous Deferred Charges	G70	Def Debit	-	-	-	77	(17)	-
	G70	Def Debit	9,031	5,222	68,188	22,052	45,897	11,590
Miscellaneous Deferred Charges Total			**9,031**	**5,222**	**68,188**	**22,129**	**45,880**	**11,590**
Production Maintenance	G30	O&M	-	-	90	-	-	2,296
	G30	O&M	197	617	1,384	8,877	262	15,299
Production Maintenance Total			**197**	**617**	**1,474**	**8,877**	**262**	**17,594**
Removal	G50	CWIP	129,694	53,566	167,107	105,104	39,134	262,436
	G50	CWIP	60,551	77,059	125,303	251,772	201,473	70,804
Removal Total			**190,245**	**130,625**	**292,410**	**356,876**	**240,607**	**333,240**
Temporary Facilities	G70	Def Debit	64	-	1,629	234	-	-
	G70	Def Debit	12,166	44,975	3,395	1,423	5,742	48,775
Temporary Facilities Total			**12,230**	**44,975**	**5,024**	**1,657**	**5,742**	**48,775**
Transmission Maintenance	G30	O&M	195,573	259,530	320,206	307,158	423,726	493,413
	G30	O&M	10,099	23,837	12,532	67,923	68,568	81,703
Transmission Maintenance Total			**205,673**	**283,367**	**332,738**	**375,081**	**492,294**	**575,116**
Transmission Operation	G30	O&M	147,573	107,247	57,069	109,405	102,434	128,726
	G30	O&M	981	3,389	44,597	2,180	41	12,647
Transmission Operation Total			**148,554**	**110,636**	**101,666**	**111,585**	**102,476**	**141,373**
Grand Total			**5,535,398**	**3,934,629**	**4,919,895**	**5,561,792**	**6,994,945**	**12,929,371**

The requested information is voluminous and is available for inspection at HECO's Regulatory Affairs Division office, Suite 1301, Central Pacific Plaza, 220 South King Street, Honolulu, Hawaii. Please contact Dean Matsuura at 543-4622 to make arrangements to inspect the requested information.

CA-IR-265

Ref: HELCO-604, HELCO-WP-606 & response to CA-IR-91 (T&D Inventory).

Both HELCO-604 and HELCO-WP-606 provide historical inventory amounts for only T&D operations. CA-IR-91(a) requested general ledger information supporting actual T&D inventory monthly balances for 2004 and 2005 for purposes of verifying the amounts presented on HELCO-604 and HELCO-WP-606. In response, HELCO provided monthly balances that combine Production and Distribution inventory. Please provide the following:

a. Does HELCO possess, or maintain separate monthly general ledger inventory balances for Production and Distribution?

   1. If so, please provide the information originally requested by CA-IR-91(a).

   2. If not, please explain why HELCO combines Production and Distribution inventory into a consolidated balance for general ledger reporting purposes.

b. Please identify the source documents for the monthly T&D stores inventory balances set forth on pages 3 and 5 of HELCO-WP-606.

c. CA-IR-91(c) sought additional support for the determination that underground material inventory should be increased by $135,000. Please confirm that the Company's response did not provide any quantitative support for the inventory increase. If this cannot be confirmed, please explain.

d. CA-IR-91(d) sought additional support for the determination that pole inventory should be increased by $95,000. Please confirm that the Company's response did not provide any quantitative support for the inventory increase. If this cannot be confirmed, please explain.

e. Referring to parts (c) and (d) above, provide a copy of any studies or analyses that support the referenced increases in inventory levels.

HELCO Response:

a. Yes, HELCO has separate inventory balances for Production and Distribution. A revised CA-IR-91(a) is attached as pages 3 and 4 of this response.

b. The source document for the monthly T&D stores inventory balances set forth on pages 3 and 5 of HELCO-WP-606 is an inventory report provided monthly by Hawaiian Electric. The source of their report is MSR179C in the Ellipse system.

c. The response stated that a comparison of the April 2005 inventory value versus the April

2006 inventory value was done to substantiate the $135,000 estimated increase in underground materials. For the underground splices and terminations, the actual date of the comparison for 2005 was March 29th and for 2006 April 24th. In addition, the PME-9 switchgear actual date of the comparison for 2006 is April 10th. The comparison analysis is provided on page 5 and 6 of this response.

d. The response stated that a comparison of the May 2005 inventory level versus the May 2006 inventory level was done to substantiate the estimated increase of $95,000 in pole inventory. The comparison analysis is provided on page 7 of this response.

e. The requested information is attached on pages 5 to 7 of this response.

Hawaii Electric Light Co., Inc.
MATERIALS INVENTORY - 2004
Revised CA-IR-91

	January	February	March	April	May	June	July	August	Sept	Oct	Nov	Dec
MSR179B	2,536,253.00	2,611,985.00	2,583,590.00	2,624,422.00	2,596,333.00	2,543,666.00	2,604,931.00	2,681,296.00	2,579,515.00	2,511,132.00	2,571,892.00	2,874,722.00
Stationary	11,843.24	11,843.24	11,843.24	11,843.24	11,843.24	-						
Mat'l Trans TSFR (DEF) GL=15400008								530.10				
unreconciled	(3,816.73)	(2,438.20)	(2,592.86)	(2,593.42)	(2,593.45)	(0.06)	-	0.79	(8.76)	87.90	87.70	87.63
GL Balance	2,544,279.51	2,621,390.04	2,592,840.38	2,633,671.82	2,605,582.79	2,543,665.94	2,604,931.00	2,681,826.89	2,579,506.24	2,511,219.90	2,571,979.70	2,874,809.63
	2/17	4/28	4/28	5/13	6/15	7/16	8/25	9/14	10/22	11/5	12/8	1/7/2005

Per MSR179C,

T&D Matl	1,646,951.00	1,719,434.00	1,680,376.00	1,708,290.00	1,702,975.00	1,632,209.00	1,682,781.00	1,766,941.00	1,665,828.00	1,596,466.00	1,613,726.00	1,870,692.00
Prod Matl	889,302.00	892,550.00	903,214.00	916,131.00	893,357.00	911,456.00	922,149.00	914,355.00	913,686.00	914,665.00	958,166.00	1,004,029.00
Total	2,536,253.00	2,611,984.00	2,583,590.00	2,624,421.00	2,596,332.00	2,543,665.00	2,604,930.00	2,681,296.00	2,579,514.00	2,511,131.00	2,571,892.00	2,874,721.00

Hawaii Electric Light Co., Inc.
MATERIALS INVENTORY - 2005
Revised CA-IR-91

	January	February	March	April	May	June	July	August	Sept	Oct	Nov	Dec
MSR179B	2,969,150.00	2,949,679.00	3,007,266.00	2,976,918.00	2,993,583.00	2,973,250.00	2,883,514.00	2,962,170.00	3,054,252.00	3,189,209.00	3,356,802.00	3,507,758.00
Stationary Mat'l Trans TSFR (DEF) GL=15400008										30,767.62	1,319.99	
unreconciled	348.85	65.54	100.49	(9.14)	836.06	(9.15)	(8.44)	(8.91)	(8.40)	(9.03)	(8.26)	(8.85)
GL Balance	2,969,498.85	2,949,744.54	3,007,366.49	2,976,908.86	2,994,419.06	2,973,240.85	2,883,505.56	2,962,161.09	3,054,243.60	3,219,967.59	3,358,113.73	3,507,749.15
	6/21/05	6/21/05	6/21/05	6/21/05	6/21/05	7/28/05	8/9/05	9/14/05	10/20/05	11/8/05	12/22/05	1/4/06
Per MSR179C,												
T&D Matl	1,965,504.00	1,947,899.00	1,998,417.00	1,965,144.00	1,987,627.00	1,967,087.00	1,882,335.00	1,986,954.00	2,075,770.00	2,195,769.00	2,372,977.00	2,500,780.00
Prod Matl	1,003,646.00	1,001,779.00	1,008,849.00	1,011,774.00	1,005,955.00	1,006,162.00	1,001,179.00	975,216.00	978,482.00	993,440.00	983,824.00	1,006,978.00
Total	2,969,150.00	2,949,678.00	3,007,266.00	2,976,918.00	2,993,582.00	2,973,249.00	2,883,514.00	2,962,170.00	3,054,252.00	3,189,209.00	3,356,801.00	3,507,758.00

Hawaii Electric Light Company, Inc.
Underground Splices and Terminations

Part Number	2005 Transaction Date	2005 QTY	2006 Transaction Date	2006 QTY	QTY Diff	Cost per Unit	Value
11613 4/o Terminator	3/29/2005	11	4/24/2006	43	32	$ 7.11	227.52
11618 2 Stress Cone	3/29/2005	67	4/24/2006	67	0	7.11	-
11622 2 Loadbreak Elbow	3/29/2005	168	4/24/2006	193	25	22.29	557.25
11623 Insert Bushing Plug	3/29/2005	69	4/24/2006	266	197	20.12	3,963.64
11624 Standoff Bushing Plug	3/29/2005	54	4/24/2006	105	51	31.17	1,589.67
11625 4/o Load break Elbow	3/29/2005	21	4/24/2006	172	151	22.29	3,365.79
11626 Bushing Plug Cap	3/29/2005	65	4/24/2006	147	82	20.30	1,664.60
11635 2 Permit Splice	3/29/2005	43	4/24/2006	66	23	16.88	388.24
11637 2 Straight Splice Plug	3/29/2005	110	4/24/2006	130	20	65.27	1,305.40
11642 2 Straight Splice Receptacle	3/29/2005	11	4/24/2006	96	85	61.42	5,220.70
11647 Bailing Assembly	3/29/2005	410	4/24/2006	1189	779	11.49	8,950.71
11650 Bailing Assembly Prefab	3/29/2005	291	4/24/2006	535	244	23.96	5,846.24
11652 1Mil Grounding	3/29/2005	136	4/24/2006	156	20	22.86	457.20
11656 4/0 Straight Splice Plug	3/29/2005	21	4/24/2006	174	153	66.95	10,243.35
11657 4/0 Straight Splice Receptacle	3/29/2005	96	4/24/2006	133	37	65.01	2,405.37
11661 500 KCM Adapter	3/29/2005	83	4/24/2006	98	15	9.61	144.15
11670 2 Non-load Break Elbow	3/29/2005	543	4/24/2006	195	-348	44.80	(15,590.40)
11671 4/0 Non-load Break Elbow	3/29/2005	119	4/24/2006	254	135	44.80	6,048.00
11708 2 Deadend Straight Splice Plug	3/29/2005	190	4/24/2006	111	-79	29.28	(2,313.12)
11709 2 Deadend Straight Splice Rec	3/29/2005	110	4/24/2006	71	-39	29.76	(1,160.64)
11716 Plug and Cap	3/29/2005	21	4/24/2006	372	351	27.55	9,670.05
11718 Plug Connector	3/29/2005	47	4/24/2006	134	87	46.16	4,015.92
11720 Plug Elbow	3/29/2005	27	4/24/2006	299	272	72.82	19,807.04
11724 T Connector Splice	3/29/2005	217	4/24/2006	348	131	86.24	11,297.44
11726 N-line Junction Prefab	3/29/2005	66	4/24/2006	141	75	112.28	8,421.00
11727 T-Housing	3/29/2005	91	4/24/2006	174	83	49.43	4,102.69
11731 1 Mil Cable Adapter	3/29/2005	91	4/24/2006	289	198	9.47	1,875.06
11742 500 KCM Compression Termin.	3/29/2005	95	4/24/2006	96	1	11.35	11.35
11743 1 Mil Compression Terminal	3/29/2005	137	4/24/2006	272	135	16.36	2,208.60
11775 Bushing Extension Apparatus	3/29/2005	21	4/24/2006	172	151	46.10	6,961.10
11776 Reducing Tap Well	3/29/2005	62	4/24/2006	130	68	58.73	3,993.64
							$ 105,677.56

Hawaii Electric Light Company, Inc.
PME-9

Part Number	Transaction Date	2005 QTY	2006 QTY	QTY Diff	Cost per Unit	Value
0T6924000 (PME-9)	4/10/2006	0	4	4	$ 14,072	56,288.00

Hawaii Electric Light Company, Inc.
Poles

Part Number	2005 Transaction Date	2005 QTY	2006 Transaction Date	2006 QTY	QTY Diff	Cost per Unit	Value	Subtotal
100081 (00019) 35' Wood Pole	05/05/2005	63	5/9/2006	71	8	$ 321	2,568.00	
100123 (00027) 40' Wood Pole	05/09/2005	127	5/9/2006	150	23	551	12,673.00	
606970 (00039) 45' Wood Pole	05/09/2005	143	5/9/2006	184	41	765	31,365.00	46,606.00
105833 (FG-35')					0	1230	-	
187434 (FG-40')					0	0	-	
183457 (FG-45') Fiberglass	5/18/2005	4	5/17/2006	2	-2	3500	(7,000.00)	
628578 (concrete tangent)		0	5/15/2006	9	9	3808	34,272.00	
628586 (concrete DE)		0	5/15/2006	7	7	4204	29,428.00	56,700.00
							$ 103,306.00	$ 103,306.00

CA-IR-266

Ref: HELCO Response to CA-IR-99, Transaction Volumes.

According to the response to parts (a) and (b) of CA-IR-99, "The information for 2005 is not readily available." Please respond to the following:

a. Identify and describe each of the volume of transaction metrics that are employed by HELCO in the normal course of business to track how much work is being done by customer accounting personnel and how responsive HELCO is being to customer service demands.
b. Provide comparable statistical data for each year 2002, 2003, 2004, 2005 and 2006 to-date for each of the transaction metrics identified in response to part (a) of this information request.
c. Explain the known causes of any unusual trends or abnormalities in the data provided in response to part (b) of this information request, if applicable.

HELCO Response:

a. The information was subsequently retrieved for 2005. The information was not readily available earlier due to the time consuming process of manually counting high bill investigation and service order work. The number of service orders and high bill investigations processed for 2005 are as follows:

Service orders:	16,855
High Bill Investigations:	1,183

In the normal course of business and in general, HELCO is aware of the daily work being done by customer service personnel. This is indicated by the telephone call levels, the number of customers visiting HELCO's offices for payment of bills or credit issues, the number of field service orders issued on a daily basis, the number of meters being read and the level of overtime hours worked. The increased level of work overtime (2000 to 2005) is confirmed by (1) the information provided above and in HELCO's response to CA-IR-99, (2) the increase in customer counts as shown in HELCO-709, and (3) the increase in other operating revenues as shown in HELCO-WP-710.

HELCO attempts to be as responsive to its customers' requests, given its workforce levels. One indicator that HELCO reviews to determine responsiveness is the quarterly customer transaction satisfaction surveys. The results of these quarterly surveys for each quarter from 2002 through year-to-date 2006 are shown on page 3 of this CA-IR response.

b. See response to item a.

c. HELCO is not aware of any known causes of unusual trends or abnormalities in the data provided in response to part b. of this information request.

Hawaii Electric Light Company, Inc.
Customer Transaction Satisfaction Survey
2002 - 2006 YTD

Year	Qtr	Service Starts & Changes	Billing Field Investigations	Overall
2002	Q1	94.5%	80.6%	91.9%
2002	Q2	91.0%	61.9%	89.5%
2002	Q3	91.8%	67.7%	90.3%
2002	Q4	91.6%	70.5%	89.7%
2003	Q1	92.1%	73.6%	90.8%
2003	Q2	93.2%	77.1%	91.7%
2003	Q3	88.9%	70.4%	88.1%
2003	Q4	90.1%	78.6%	89.2%
2004	Q1	93.0%	78.1%	90.1%
2004	Q2	93.2%	80.8%	91.4%
2004	Q3	90.1%	62.5%	87.9%
2004	Q4	90.3%	54.3%	86.8%
2005	Q1	92.2%	68.1%	89.1%
2005	Q2	92.4%	71.9%	89.8%
2005	Q3	93.3%	75.5%	89.5%
2005	Q4	91.7%	76.0%	88.8%
2006	Q1	92.7%	72.9%	89.2%

CA-IR-267

Ref: HELCO Response to CA-IR- 106, REEEPAH.

According to the response, "No reports, studies, workpapers or projections were specifically prepared for the proposed REEEPAH." Please respond to the following:

a. Confirm that CA-IR-106 was not restricted to asking for only items "specifically prepared for the proposed REEEPAH."

b. State whether HELCO relied upon any analyses, reports, studies, workpapers or other documents in any way to evaluate the needs and design of its proposed REEEPAH, without regard to the intended "specific purpose" of such work.

c. If yes, describe each such document.

d. Provide complete copies of each document identified in your response to part (b) of this information request.

e. Describe each alternative element of REEEPAH that has been considered by HELCO for possible inclusion in the program, and explain the perceived advantages and disadvantages of each such element.

f. For each REEEPAH element mentioned in your response to part (e), state whether that element is included in the REEEPAH proposal that is now being advanced for Commission approval.

g. Provide the most definitive available description of terms, conditions and anticipated costs for each REEEPAH element that is now intended to be implemented by HELCO.

h. Identify who "this developer" is, as mentioned at page 3 of the response, and provide complete copies of all correspondence between HELCO and the developer, including but not limited to draft and final agreements.

i. Explain whether HELCO believes it is appropriate for electric utility ratepayers to provide funding for affordable homes initiatives. Provide copies of all documentation relied upon to support HECO's position.

j. Identify and describe each instance HELCO is aware of in which utility regulatory agencies allowed the costs of affordable homes initiatives to be included in the determination of public utility rates. Provide copies of all documentation relied upon to support the response to this information request.

k. Provide citations to each Hawaii or other state regulatory commission rate order mentioned in your response to part (I).

HELCO Response:

a. CA-IR-106 is stated thusly: "Please provide complete copies of all reports, studies, analyses, workpapers, projections and other documents relied upon by HELCO to evaluate the need for and design of the proposed REEPAH program."

b. HELCO's REEEPAH proposal is a result of HELCO's desire to provide lower income residential customers with more options to manage their electricity bills. The need for the program was perceived after a review of HELCO's current rate structure (see HELCO T-19) demonstrated the need for innovative approaches to mitigate the financial impacts of further increases in electricity bills to the residential ratepayers.

When HELCO was considering its potential options to fill this need, it undertook a study to see if this could be accomplished through more aggressive residential DSM programs. HELCO concluded that there exist substantial market and economic barriers to expanding the rate of solar water heating installations beyond those levels in HELCO's new DSM programs already being developed in IRP-3. About the same time, as previously explained in HELCO's responses to CA-IR-14 and CA-IR-106, HELCO was becoming acutely aware of a key socio-economic issue in Hawaii County, namely the problem of affordable housing. Further, at the urging of the Mayor of Hawaii County, HELCO had entered into discussions with the County regarding the possibility of forming a partnership to utilize energy efficiency and renewable energy technologies to support affordable housing strategies and goals. The Memorandum of Understanding between the parties has been provided in HELCO's response to CA-IR-106. As a result of these discussions with the County of Hawaii, HELCO realized that targeting affordable housing projects would be an efficient way to provide the options for residential customers to manage their electricity bills. Thus the concept for REEEPAH was born. As HELCO has explained in its response to CA-IR-106, although HELCO does not yet have a detailed framework for REEEPAH, its intent is to take into consideration the County's designs for the Waikoloa Affordable Housing Project in developing a flexible framework for REEEPAH. Currently HELCO is working with its consultant Global Energy Partners to draft a REEEPAH

framework, and expects that this will be ready in time for HELCO's rebuttal testimony in this rate case. HELCO is open to working with the Consumer Advocate to develop the REEEPAH into a workable program.

c. The document referenced in part (b) of this response is a study entitled "Solar Water Heater Program Development". The analysis was conducted to assess the feasibility of a major expansion of HELCO's Residential Efficient Water Heating (REWH) program in order to assist customers to lower their electricity costs. This study was not conducted in direct support of the development of REEEPAH, however it was considered as one potential option to fulfill HELCO's objective to provide lower income residential customers with more options to manage their electricity bills with a rate increase request pending.

d. The referenced report is included on pages 6 – 38. Please also see the Memorandum of Understanding between HELCO and the County of Hawaii, provided in HELCO's response to CA-IR-106.

e. The following elements have been considered by HELCO for possible inclusion in REEEPAH: a residential solar water heater grant program, a customer assistance program that would subsidize photovoltaic system or other renewable energy source installation in affordable housing developments and consultation to customers wishing to participate in HELCO's net energy metering program, and a program that would buy down the cost of solar water heating systems that would be leased to lower income homeowners. The advantage of a solar water heater grant program includes its inherent flexibility, as HELCO is still working with the County of Hawaii and another developer to develop specific pathways to solar water heater installations in affordable housing projects that would provide options to residential customers to manage their electricity bills. The disadvantage of such a program includes the amount of effort that

would need to be expended by HELCO to evaluate grant proposals submitted by developers. The advantage of a customer assistance program that provides photovoltaic system installation in affordable housing developments and consultation to customers wishing to participate in HELCO's net energy metering program includes that it would provide a renewable energy option (complementary to energy efficiency options) with which customers could manage their electricity bills. The disadvantages of such a program include that it would be complex and costly to administer, and photovoltaic systems themselves are more expensive to purchase than a solar water heating system. The advantage of a program that would buy down the cost of solar water heating systems that would be leased to lower income homeowners includes that it enables the customer to obtain the advantages of a solar water heater system without the capital expense involved in purchasing a system. The disadvantage of such an option includes that it would be difficult to implement due to the accounting complexities of equipment leasing options.

f. Of the elements described in the response to part (e), HELCO has now focused its efforts on the residential grant program. HELCO may broaden the solar water heater grant program to allow proposals for other types of residential energy efficiency measures besides solar water heaters. This is because, in discussions with the County of Hawaii, the County expressed interest in non-solar measures for its affordable housing project, and HELCO agrees that other measures should be included. The other two possible elements of REEEPAH, the photovoltaic customer assistance program and the solar water heater buy-down and leasing program, will be set aside from further consideration at this time to focus on the grant program, although HELCO may decide at a later date to seek approval of these elements as well.

g. Please see the response to CA-IR-242(a).

h. HELCO is referring to Mr. John Stevens of Westpro Development, with whom Mr. Warren Lee discussed the proposed REEEPAH on June 27, 2006. See also a letter from Mr. Stevens dated August 29, 2006, included as page 39 and 40, expressing his interest in working with HELCO to incorporate energy efficiency options in his affordable housing projects. HELCO has only recently begun work on an agreement with Westpro, and therefore has nothing to submit at this time.

i. HELCO believes it appropriate to utilize a ratepayer-funded program such as REEEPAH to support and work through affordable housing programs to reach customers most impacted by rate increases, by offering options for customers to save on their bills. Please see also HELCO's response to CA-IR-239.

j. HELCO is not aware of any such instances.

k. Not applicable.

EPRI Solutions, Inc.
Energy Utilization Business Unit
operated by Global Energy Partners, LLC
3569 Mt. Diablo Boulevard, Suite 200
Lafayette, California 94549 USA
phone: 925-284-3780
fax: 925-299-2904

www.eprisolutions.com

SOLAR WATER HEATER PROGRAM DEVELOPMENT

– Final Report –

Submitted to:

Hawaii Electric Light Company, Inc.

Submitted by:

Global Energy Partners LLC

A division of EPRI Solutions, Inc.

November 15, 2005

CONTENTS

1. **INTRODUCTION** 1

1.1 OVERVIEW 1
1.2 SUMMARY RECOMMENDATIONS 1

2. **ANALYSIS OF AVAILABLE MARKET** 2

2.1 BENCHMARKING ANALYSIS 2
Utility Program Efforts 3
Other Incentive Program Efforts 3
2.2 REVIEW OF HELCO MARKET CHARACTERISTICS 4

3. **PROGRAM PARAMETERS** 5

3.1 SCENARIO A ANALYSIS 5
3.2 SCENARIO B ANALYSIS 6
3.3 SCENARIO C ANALYSIS 7
3.4 PROGRAM IMPACTS IN RELATION TO MAXIMUM ACHIEVABLE POTENTIAL 9

4. **PRELIMINARY BENEFIT/COST ANALYSIS** 12

5. **ISSUES, RECOMMENDATIONS AND CONCLUSIONS** 15

5.1 POTENTIAL ISSUES 15
5.2 RECOMMENDATIONS 16
5.3 CONCLUSIONS 17

APPENDICES

A. PROGRAM ANALYSIS INPUTS
B. PRELIMINARY B/C RESULTS

1. INTRODUCTION

1.1 Overview

HELCO is considering a major expansion of its Residential Efficient Water Heating ("REWH") program to bring about a major increase in the installation of solar water heating equipment in residential buildings throughout the Island. The objective of this effort is to aid customers in lowering their energy costs. An analysis was conducted to assess the feasibility of this major program expansion. The analysis was conducted based on existing data sources, including HELCO's draft IRP-3 assessment and its most recent appliance saturation surveys, combined with input provided from HELCO staff and limited benchmark data sources.

This report first provides an analysis of the current and projected available market for electric water heating. First, an assessment is conducted as to the types of programs offered by other utilities and energy organizations on the mainland. Then, a detailed analysis is provided as to the projected available market for electric water heating on the Island. Second, a series of "what-if" scenarios are developed to reflect the range of possibilities in terms of implementing a major expansion of the REWH program for solar water heating. Program parameters such as projected number of annual participants, energy and peak demand savings, and program expenditures are specified for each scenario. The resulting impacts are compared to previous HELCO savings projections for electric water heaters. Third, a preliminary benefit/cost assessment is conducted to determine whether the project impacts and expenditures are feasible from the various cost-effectiveness test perspectives. Finally, implementation issues are identified and recommendations made as to the potential next steps that HELCO might consider for moving this concept forward. The analysis framework used to support this assessment is largely based on the draft IRP-3 assessment. As such, many of the same analysis parameters (e.g., unit-level savings, avoided costs, etc.) are identical to those used for the previous assessment.

1.2 Summary Recommendations

This assessment will show that it is technically possible to consider any of the scenarios outlined in this report. However, without a significant commitment of resources (both internal and external), it would be challenging for HELCO to implement the program beyond the participation levels that it currently achieves in the existing REWH Program. Furthermore, the analysis will show that the benefit-cost tests are significantly reduced under any of the scenarios and due to the difficulties of increasing participation levels, It is therefore recommended that HELCO only consider a modest expansion of its solar water heating program as was done in the Preferred Scenario developed for IRP-3 or possibly setting as a goal the level outlined in the first scenario (Scenario A) outlined in this assessment. There is sufficient market capacity for these options, Moving beyond the Scenario A incentive and participation levels does not appear to be sustainable given the market barriers and implementation issues noted in this assessment.

2. ANALYSIS OF AVAILABLE MARKET

2.1 Benchmarking Analysis

Several organizations offer solar water heater rebate programs. Table 2-1 lists a total of 17 programs offered by mainland organizations. The average rebate amount for solar water heater systems amongst these programs is $941. As can be seen, there is a significant variation in the rebate levels. Some organizations offer a variable amount based on the percentage of the project cost while others offer no- or low-interest loans for the balance of the project cost after rebates and any state tax credits.

TABLE 2-1: Benchmark of Utility Solar Water Heat Rebate Programs

Utility/Organization	State	Rebate Amount	Notes
Wisconsin Focus on Energy	Wisconsin	$3,000	Up to a maximum of 30% of project cost
Clark PUD	Washington	$2,000	Plus no interest loan for balance due
Energy Trust of Oregon	Oregon	$1,500	Incentive paid to contractor and deducted from customer's bill
Ashland Electric	Oregon	$1,000	
South Carolina State Energy Office	South Carolina	$1,000	
Wisconsin Public Power, Inc.	Wisconsin	$1,000	25% of project cost; WPP represents 39 municipal utilities
JEA	Florida	$800	242 solar systems installed to date
Clallam PUD	Washington	$750	
Salt River Project	Arizona	$750	
Arizona Public Service	Arizona	$700	
Emerald PUD	Oregon	$600	Plus up to $4,000 no interest loan; 15-20 participants per year
Eugene Water & Electric Board	Oregon	$600	Plus up to $4,000 no interest loan
Gray's Harbor PUD	Washington	$600	Plus up to $4,000 low interest loan
Franklin PUD	Washington	$500	
Gainsville Regional Utilities	Florida	$450	59 units installed to date
Sacramento Municipal	California	$400	Plus low interest loan for balance of cost
Austin Electric	Texas	$350	
AVERAGE		**$941**	

Source: Database of State Incentives for Renewable Energy, Solar Electric Power Assocation

The total incentive is a function of both the rebate and any applicable tax credit. Table 2-2 summarizes the existence of state tax credits for the states listed in Table 2-1 above. As can be seen, nearly every state offers some type of complementary tax credit to the incentive programs offered by the utilities. When tax credits are combined with the available rebates, participation rates tend to increase as customers can clearly count using the annual dollar savings from having solar systems as a basis for achieving a shorter payback period.

TABLE 2-2: Tax Credits for States Having Utility Rebate Programs

State	Type of Tax Credit
Arizona	Tax credit totaling 25% of system cost to a maximum of $1,000 per system
California	Deduction from state taxes for 100% of the interest charged on any loans to purchase solar water heating systems.
Florida	Sales tax exemption on equipment purchased
Oregon	Tax credit equals 60 cents/kWh saved in the first year up to a maximum of $1,500 per system
Texas	Property tax exemption on equipment installed
Washington	Sales tax exemption on equipment purchased
Wisconsin	Property tax exemption on equipment installed

Utility Program Efforts

A number of utilities offer incentives for solar water heater installations. These incentives tend to cluster around $750, with a few exceptions. In one case, a municipal utility in Washington offers a healthy $2,000 with a no-interest loan to cover the balance. In this case, the program manager indicated that they opted to increase the incentive amount because they weren't getting the desired participation at a lower rebate level. Thus far, customers appear to be responding with higher participation levels. A group of Oregon municipal utilities offer $600 rebates with no-interest loans to finance the balance. The financing is managed directly through the utility, with the revolving funds to handle future loans. These programs have been very successful, with high levels of participation over the past several years.

Other Incentive Program Efforts

According to the Solar Electric Power Association, several non-utility programs are in place to promote solar water heater installations. Three programs are briefly profiled:

- Energy Trust of Oregon
- Wisconsin Focus on Energy
- South Carolina State Energy Office

The Energy Trust of Oregon's Solar Water Heating (SWH) Buy-down Program offers incentives to customers of Pacific Power, PGE, and NW Natural Gas who install solar water or pool heating systems on their homes, office buildings, community buildings, agricultural, and municipal facilities. The Energy Trust is a nonprofit organization created to invest public purpose funding for energy efficiency and renewable energy in Oregon. The buy-down incentive is paid directly to the solar contractor and is deducted from the customer's final cost in the amount of $0.40/kWh rated

savings for the first year, with a $1,500 cap. Customers with existing electric or gas water heating systems are eligible to participate.

The Wisconsin-based Focus on Energy program offers rebates for installing solar water heating systems in homes. Payments are based on an estimate of the amount of electricity or therms produced annually. The rebate cap is 30% of the project cost or up to a maximum of $3,000.

The South Carolina State Energy Office offers the Residential Solar Initiative to demonstrate and encourage the building of homes with solar hot water heating systems. Homebuilders can receive a $1,000 rebate for every home built with a solar hot water heating system, along with publicity from the State Energy Office as a builder with experience in installing solar hot water systems.

2.2 Review of HELCO Market Characteristics

A review was conducted of HELCO's existing residential market characteristics. The analysis starting point was to use input data on the number of households derived from the Phase I study,[1] which in turn was derived from the 2002 HELCO Appliance Saturation Survey. According to data tables from the Phase I study (Volume 4, Appendix C, Pages 4 and 16), we learned the following:

- Single-Family
  - Number of existing households: 46,560
  - Number of new households: about 1,200 per year
  - Saturation of electric water heat: around 60%
- Multi-Family
  - Number of existing households: 10,820
  - Number of new households: about 285 per year
  - Saturation of electric water heat: around 70%

Accounting for the saturation of existing electric water heaters, it is estimated that about 35,000 existing households on the island have electric water heat and 900 new households per year will install electric water heaters. To date, it is estimated that roughly 4,000 households have installed solar water heaters as a result of HELCO's program, 75% from existing and 25% from new. That means 31,000 households would be eligible to receive solar water heaters. Another 900 new households annually would be eligible to receive solar water heaters.

More detailed summary tables on these baseline market characteristics can be found in Appendix A of this report.

[1] See report titled: "Assessment of Energy Efficiency and Demand Response Potential, Volume 4: HELCO Technical Appendices," conducted by Global Energy Partners, LLC. December 2003.

3. PROGRAM PARAMETERS

This section provides the program parameters associated with different levels that HELCO could operate an expanded Solar Water Heating program. Various levels of operation reflect the uncertainties associated with customer acceptance of the solar water heating measures and the increased difficulty of implementing expanded programs targeting higher participation levels. To capture this uncertainty, three scenarios were run. Scenario A reflects an aggressive enhancement to HELCO's existing program offering, doubling the current 400 participants per year to 800 participants. Scenario B reflects a super-aggressive enhancement to the existing program, tripling the current 400 participants per year to 1,200 participants. Scenario C reflects a maximum enhancement to the existing program, targeting a total of 1,500 participants. All scenarios are run for 20 years. Appendix A contains the detailed workpapers supporting each of the three scenarios. The highlights of the analysis are described in the sections below.

3.1 Scenario A Analysis

This analysis assumes that there would be a substantial increase in participants relative to HELCO's current program levels. That translates to 800 participants, who would be received each year for the 20-year time horizon. After 20 years, a total of 16,000 customers would have solar water heaters, representing about 33% of the available population. Other data parameters include:

- Estimated annual energy savings: 1.74 million kWh (gross system level): This is based on a unit savings of 2,172 kWh per year.
- Estimated annual peak demand savings: 416 kW (gross system level). This is based on a unit peak demand reduction of 0..52 kW.
- Net to gross ratio: Assumed at 0.73, which is equivalent to current REWH program.
- Capital cost per installation:
    - The average installed system cost for solar water heaters installed under HELCO's existing REWH program has been increasing steadily over the years. For the first half of 2005, the costs are:
        - Existing 80 gallon system: $5,125
        - Existing 120 gallon system: $5,614
        - New 80 gallon system: $4,999
        - *New 120 gallon system:* *$5,530*

      However, a review of historical data for the program dating back to 1996 indicates slightly lower average installed costs. For existing construction, the average installed cost of all systems included in the program from 1996 to 2005 was $4,906. For new construction, the average installed cost was $4,596. The weighted average between existing and new was $4,770. Recognizing the cost increases noted above, it is appropriate to escalate the average system cost to $5,000 for the purposes of this analysis.

- HELCO incentive: $1,500. Assumed to be a moderate increase relative to the existing HELCO program to encourage the larger number of participants.
- Federal tax credit (@ 30% of the net cost after HELCO rebate): $1,050 (Calculation: [$5,000 - $1,500] * 30%). Since the credit has a 3-year limit (2006-2008), we assume that the credit expires in 2009.
- State tax credit (@ 35% of the net system cost after HELCO rebate and federal tax credit with a cap of $1,750): $858 (Calculation: [$5,000 - $1,500- $1,050] * 35%). Note that there is a sunset provision for the credit after 2008 however the analysis assumes that the credit would be renewed by the State throughout the 20-year time horizon.
- Net cost to the customer: $1,593 + interest charges (if appropriate)

- HELCO Administration Costs:
  - Incentives: $1,200,000 (@ $1,500 per participant)
  - Direct Labor: $300,000 (@ 4 FTE)
  - Outside Services: $80,000 for equipment installation verification, technical assistance, and other support services provided by outside contractors.
  - Marketing and Advertising: $60,000
  - Other Costs: $10,000
  - M&E: $76,500 (based on 17% of total program costs based on 2004 REWH program budget)
  - Return on Costs: $225,196
    TOTAL: $1,951,696

3.2 Scenario B Analysis

This analysis assumes that there would be more than a doubling of participants relative to HELCO's current program levels. That translates to 1,200 participants, who would be received each year for the 20-year time horizon. After 20 years, a total of 24,000 customers would have solar water heaters, representing about 50% of the available population. Other data parameters include:

- Estimated annual energy savings: 2.61 million kWh (gross system level): This is based on a unit savings of 2,172 kWh per year.
- Estimated annual peak demand savings: 617 kW (gross system level). This is based on a unit peak demand reduction of 0.52 kW.
- Net to gross ratio: Assumed at 0.65, which reflects the fact that a higher incentive level would lead to a larger number of free-riders relative to current program levels.
- Capital cost per installation:
  - The average installed system cost for solar water heaters installed under HELCO's existing REWH program has been increasing steadily over the years. For the first half of 2005, the costs are:
    - Existing 80 gallon system: $5,125
    - Existing 120 gallon system: $5,614

- New 80 gallon system: $4,999
- New 120 gallon system: $5,530

However, a review of historical data for the program dating back to 1996 indicates slightly lower average installed costs. For existing construction, the average installed cost of all systems included in the program from 1996 to 2005 was $4,906. For new construction, the average installed cost was $4,596. The weighted average between existing and new was $4,770. Recognizing the cost increases noted above, it is appropriate to escalate the average system cost to $5,000 for the purposes of this analysis.

- HELCO incentive: $2,000. Assumed to be a significant increase relative to the existing HELCO program to encourage the larger number of participants.
- Federal tax credit (@ 30% of the net cost after HELCO rebate): $900 (*Calculation: [$5,000 - $2,000] * 30%). Since the credit has a 3-year limit (2006-2008)*, we assume that the credit expires in 2009.
- State tax credit (@ 35% of the net system cost after HELCO rebate and federal tax credit with a cap of $1,750): $735 (Calculation: [$5,000 - $2,000- $900] * 35%). Note that there is a sunset provision for the credit after 2008 however the analysis assumes that the credit would be renewed by the State throughout the 20-year time horizon.
- Net cost to the customer: $1,365 + interest charges (if appropriate)

- HELCO Administration Costs:
  - Incentives: $2,400,000 (@ $2,000 per participant)
  - Direct Labor: $450,000 (@ 6 FTE)
  - Outside Services: $100,000 for equipment installation verification, technical assistance, and other support services provided by outside contractors.
  - Marketing and Advertising: $100,000
  - Other Costs: $20,000
  - M&E: $113,900
  - Return on Costs: $404,804
    TOTAL: $3,599,191

3.3 Scenario C Analysis

This analysis assumes that there would be more than a tripling of participants relative to HELCO's current program levels. That means 1,500 participants would be received each year for the 20-year time horizon. After 20 years, a total of 30,000 customers would have solar water heaters, representing about 62% of the available population. Other data parameters include:

- Estimated annual energy savings: 3.26 million kWh (gross system level): This is based on a unit savings of 2,172 kWh per year.
- Estimated annual peak demand savings: 772 kW (gross customer level). This is based on a unit peak demand reduction of 0.52 kW.

- Net to gross ratio: Assumed at 0.5, which reflects the fact that a significantly higher incentive level relative to current levels would lead to roughly half the participants being free-riders.
- Capital cost per installation:
  - The average installed system cost for solar water heaters installed under HELCO's existing REWH program has been increasing steadily over the years. For the first half of 2005, the costs are:
    - Existing 80 gallon system: $5,125
    - Existing 120 gallon system: $5,614
    - New 80 gallon system: $4,999
    - New 120 gallon system: $5,530

    However, a review of historical data for the program dating back to 1996 indicates slightly lower average installed costs. For existing construction, the average installed cost of all systems included in the program from 1996 to 2005 was $4,906. For new construction, the average installed cost was $4,596. The *weighted average between existing and new was $4,770. Recognizing the cost* increases noted above, it is appropriate to escalate the average system cost to $5,000 for the purposes of this analysis.
  - HELCO incentive: $3,000. Assumed to be a substantial increase relative to the existing HELCO program to encourage the larger number of participants.
  - Federal tax credit (@ 30% of the net cost after HELCO rebate): $600 (Calculation: [$5,000 - $3,000] * 30%). Since the credit has a 3-year limit (2006-2008), *we assume that the credit expires in 2009.*
  - State tax credit (@ 35% of the net system cost after HELCO rebate and federal tax credit with a cap of $1,750): $490 (Calculation: [$5,000 - $3,000 - $600] * 35%). Note that there is a sunset provision for the credit after 2008 however the analysis assumes that the credit would be renewed by the State throughout the 20-year time horizon.
  - Net cost to the customer: $910 + interest charges (if appropriate)
- HELCO Administration Costs:
  - Incentives: $7,975,500 (@ $5,317 per participant)
  - Direct Labor: $600,000 (@ 8 FTE)
  - Outside Services: $120,000 for equipment installation verification, technical assistance, and other support services provided by outside contractors.
  - Marketing and Advertising: $150,000
  - Other Costs: $30,000
  - M&E: $153,000
  - Return on Costs: $1,177,630
    TOTAL: $10,206,130

3.4 Program Impacts in Relation to Maximum Achievable Potential

The cumulative impacts for the program are reported in Table 3-1. The first three rows report the projections that are made for the IRP-3 Preferred Scenario. For Scenario A, the cumulative energy savings go from 1.3 million kWh in 2007 to 17.8 million kWh in 2020. The peak demand savings go from 0.3 MW in 2007 to 4.21 MW in 2020. For Scenario B, the cumulative energy savings go from 1.6 million kWh in 2007 to 21.9 million kWh in 2020. The peak demand savings go from 0.4 MW in 2007 to 5.19 MW in 2020. For Scenario C, the cumulative energy savings go from 1.6 million kWh in 2007 to 22.8 million kWh in 2020. The peak demand savings go from 0.4 MW in 2007 to 5.4 MW in 2020. As each scenario is presented, it is important to provide a comparison to HELCO's the current (2005) budget for REWH. According to the most recent A&S report (dated 5/31/05), the REWH budget is $687,165 with estimated impacts of 0.2 MW and 0.8 million kWh. The first-year budget for the Preferred Scenario (IRP-3 proposed REWH and RNC programs) is $1,104,731 with estimated gross system level impacts of 0.2 MW and 1.2 million kWh.[2]

TABLE 3-1: Projected Energy and Peak Demand Savings
Net System Level

Cumulative Net System Savings		Year					
		2007	2008	2009	2010	2015	2020
REWH IRP-3 Preferred Scenario	Energy (MWh)	914	1,828	2,742	3,656	7,348	10,822
	Peak Demand (MW)	0.21	0.42	0.64	0.85	1.71	2.52
	Number of Participants	500	1,000	1,500	2,000	4,500	7,000
Scenario A	Energy (MWh)	1,268	2,537	3,805	5,073	11,415	17,756
	Peak Demand (MW)	0.30	0.60	0.90	1.20	2.70	4.21
	Number of Participants	800	1,600	2,400	3,200	7,200	11,200
Scenario B	Energy (MWh)	1,564	3,127	4,691	6,255	14,073	21,891
	Peak Demand (MW)	0.37	0.74	1.11	1.48	3.33	5.19
	Number of Participants	1,200	2,400	3,600	4,800	10,800	16,800
Scenario C	Energy (MWh)	1,629	3,258	4,886	6,515	14,659	22,803
	Peak Demand (MW)	0.39	0.77	1.16	1.54	3.47	5.40
	Number of Participants	1,500	3,000	4,500	6,000	13,500	21,000

[2] Note that the REWH and RNC programs combine solar water heating, high efficiency water heaters and tank and timers into the program format; as such, reported budgeted amounts reflect the total expenditures for all these measures. However, the reported impacts reflect solar water heating measures alone.

A comparison was conducted relative to the IRP-3 Preferred Scenario results for the Residential Efficient Water Heating program (REWH). Another comparison was conducted relative to the Maximum Achievable Potential (MAP) analysis conducted as part of the Phase I joint utility study in preparation for HELCO's IRP-3 analysis. Table 3-2 reports the results of that comparison.

TABLE 3-2: Projected Energy and Peak Demand Savings Under Preferred and MAP Scenarios

Cumulative Net System Savings		Year					
		2007	2008	2009	2010	2015	2020
REWH IRP-3 Preferred Scenario	Energy (MWh)	914	1,828	2,742	3,656	7,348	10,822
	Peak Demand (MW)	0.21	0.42	0.64	0.85	1.71	2.52
Water Heating MAP	Energy (MWh)	5,000	6,000	8,000	10,000	19,000	21,000
	Peak Demand (MW)	0.70	0.90	1.20	1.50	3.10	3.50
Preferred Scenario % of MAP	Energy (MWh)	18%	30%	34%	37%	39%	52%
	Peak Demand (MW)	30%	47%	53%	57%	55%	72%
A % of MAP	Energy (MWh)	25%	42%	48%	51%	60%	85%
	Peak Demand (MW)	43%	67%	75%	80%	87%	120%
B % of MAP	Energy (MWh)	31%	52%	59%	63%	74%	104%
	Peak Demand (MW)	53%	82%	93%	99%	108%	148%
C % of MAP	Energy (MWh)	33%	54%	61%	65%	77%	109%
	Peak Demand (MW)	55%	86%	96%	103%	112%	154%

Table 3-2 reports the projected energy and peak demand savings for the IRP-3 Preferred Scenario for the solar water heating aspects of the REWH and RNC programs and the MAP for water heating.[3] The Preferred Scenario for the REWH program projected savings of 0.9 million kWh in 2007 growing to 9.9 million kWh in 2020 and peak demand reductions of 0.2 MW in 2007 growing to 2.5 MW in 2020. The Preferred Scenario results, which are significantly lower than either Scenario A, B or C results, reflected participation assumptions predicated on continuing the

[3] Note that the MAP analysis did not break out solar water heating explicitly. These values reflect the combination of solar water heating, high efficiency electric water heaters, heat pump water heaters, and a variety of other water heating measures such as wraps, flow devices, and tank and timer.

REWH program as it is currently implemented, with roughly 500 new participants per year. Note however that the REWH program, as proposed in the Preferred Scenario of IRP-3, is itself an enhancement over HELCO's existing (as of 2005) REWH program.

The MAP results reflect savings of 5 million kWh in 2007 growing to 21 million kWh by 2020 and peak demand reductions of 0.7 MW in 2007 growing to 3.5 MW in 2020. When compared to the MAP water heating savings, Scenario A represents 25% of MAP in 2007 however it grows to 85% of MAP by 2020. Scenario B represents 31% of MAP energy savings in 2007 and grows significantly to 104% of MAP by 2020. Scenario C represents 33% of MAP energy savings in 2007 and grows further to 109% of MAP by 2020. Similar patterns are observed for peak demand. As can be seen, all three scenarios rapidly close in on (and in some cases even surpass) the MAP estimates after only a few years. This reflects the fact that the MAP analysis conveyed penetration rates that were consistent with the industry experience, which has been corroborated by the benchmark analysis conducted as part of this study. Most programs have seen levels of participation that are well under 10% of the available market. Should HELCO embark on the Super Solar Water Heating program along the lines as this analysis suggests, HELCO would be breaking new ground in the industry with projections of 33% and 50% of the available market achieved after 20 years of implementation. At the time that the MAP analysis was conducted, projected penetration rates reflected what was presumed to be the "best case" scenario given assumptions about past HELCO implementation efforts and industry experience.

4. PRELIMINARY BENEFIT/COST ANALYSIS

This section reports on the preliminary benefit/cost ("B/C") analysis that was conducted for each program scenario. The B/C approach taken was the same approach that was used for the IRP-3 DSM analysis conducted by HELCO earlier this year. The avoided costs, escalation rates, discount rates, and other factors were the same as those used for the IRP-3 preliminary B/C analysis. The results of the B/C analysis for each scenario are summarized below. More detailed B/C summaries for each scenario can be found in Appendix B.

Table 4-1 reports on the B/C analysis results for the Preferred Scenario contained in the IRP-3 assessment. Table 4-2 reports on the B/C analysis results for Scenario A. As can be seen, the TRC is 0.31. This result compares to the TRC of 0.43 for the REWH program Preferred Scenario reflected in the Phase II report. The erosion of the B/C result (from Preferred to Scenario A) reflects higher administrative costs necessary to implement this program, as well as a difference in the mix of measures offered under the two programs. In the REWH program, three measures are offered (solar water heat, high efficiency water heat and tank and timer) whereas the Scenario A analysis only represents the benefits and costs associated with just a solar water heating program.

TABLE 4-1: B/C Analysis Results – IRP-3 Preferred Scenario REWH Program[4]

Test Perspective	Million Dollars			B/C Ratio
	Lifetime Benefits	Lifetime Costs	Net Benefits	
Total Resource Cost (TRC)	$6.0	$13.9	($7.9)	0.43
Utility Cost (UC)	$6.0	$8.9	-$2.9	0.67
Ratepayer Impact Measure (RIM)	$6.0	$20.5	-$14.5	0.29
Participant (Part)	$11.6	$9.5	$2.0	1.21

[4] Note that the REWH program includes solar water heaters, high efficiency water heaters, and tank and timer devices; a separate benefit-cost analysis was not completed for solar water heating.

TABLE 4-2: B/C Analysis Results – Scenario A

Test Perspective	Million Dollars			B/C Ratio
	Lifetime Benefits	Lifetime Costs	Net Benefits	
Total Resource Cost (TRC)	$13.5	$43.1	($29.6)	0.31
Utility Cost (UC)	$13.5	$26.6	-$13.1	0.51
Ratepayer Impact Measure (RIM)	$13.5	$55.0	-$41.4	0.25
Participant (Part)	$28.3	$32.9	-$4.5	0.86

Table 4-3 reports on the B/C analysis results for Scenario B. The TRC result is 0.29, which is lower than the Scenario A result. Scenario B merely reflects a scale up of the program from 800 participants per year to 1,200 and an increase of the incentive level from $1,500 to $2,000. Because of the significant increase in the incentive level, the net-to-gross ratio is reduced to 0.60 to account for an anticipated higher number of free-riders participating in the program. As can be seen, going to the Scenario B level for the program would result in an overall reduction in the program's economic effectiveness. On the flip side however, total resource benefits increase significantly from $13.5 million in Scenario A to $16.7 million in Scenario B.

TABLE 4-3: B/C Analysis Results – Scenario B

Test Perspective	Million Dollars			B/C Ratio
	Lifetime Benefits	Lifetime Costs	Net Benefits	
Total Resource Cost (TRC)	$16.7	$58.4	($41.7)	0.29
Utility Cost (UC)	$16.7	$49.1	($32.4)	0.34
Ratepayer Impact Measure (RIM)	$16.7	$84.1	($67.4)	0.20
Participant (Part)	$35.0	$33.1	$1.9	1.06

Table 4-4 reports on the B/C analysis results for Scenario C. The TRC result is 0.28, which is lower than the Scenario A or B results. Scenario C reflects a major scale up of the program to 1,500 participants per year for 20 years and a major increase of the incentive levels to $3,000, which when combined with federal and state tax credits, covers a significant portion of the customer's cost. Because of the significant increase in the incentive level, the net-to-gross ratio is further reduced to 0.50 to account for an anticipated higher number of free-riders participating

in the program. As can be seen, going to the Scenario C level for the program would result in an unfeasible reduction in the program's economic effectiveness.

TABLE 4-4: B/C Analysis Results – Scenario C

Test Perspective	Million Dollars			B/C Ratio
	Lifetime Benefits	Lifetime Costs	Net Benefits	
Total Resource Cost (TRC)	$17.4	$61.8	($44.4)	0.28
Utility Cost (UC)	$17.4	$85.7	($68.3)	0.20
Ratepayer Impact Measure (RIM)	$17.4	$122.1	($104.7)	0.14
Participant (Part)	$36.4	$40.0	($3.6)	0.91

5. ISSUES, RECOMMENDATIONS AND CONCLUSIONS

This analysis provides the framework for potential savings and economic feasibility should HELCO embark on a major expansion of its REWH program to accommodate a significantly higher volume of solar water heater installations. While there are physically enough electric water heaters on the Big Island to accommodate the number of participants projected for any of the three scenarios laid out in this assessment, it is important to note that there are significant issues and barriers that clearly stand in the way of achieving any of the projected participation levels. The first two scenarios result in benefit-cost ratios that are roughly in line with HELCO's current experience in its REWH program. **However it is important to caution that any program scenario will require a massive expansion of HELCO's implementation capabilities relative to current levels.** The projected budget calls for major increases in the number of HELCO staff dedicated to this program. It also calls for major increases in the expenditures for marketing and promotion of the program. This is particularly important given the preliminary feedback that HELCO has received from installation contractors who indicate that they don't have the capability to market or install an expanded number of solar water heaters given their current workload as a result of the Island's new construction boom.

5.1 Potential Issues

As HELCO management considers its options with this program, it is important to point out some of the anecdotal information that is known about the solar water heating market infrastructure on the Big Island. First, there are only two dedicated solar installation companies on the Big Island out of 28 REWH Program participating contractors. The vast majority of solar contractors are plumbing contractors who do solar as a sideline. They do not have the time, budget, nor means to do extensive solar marketing or salesmanship, and therefore this group cannot be counted on to increase the demand number of systems to the extent envisioned under any of the scenarios outlined in this report. Second, REWH Program experience indicates that contractors are currently too busy to take on additional work beyond present levels. This trend is expected to continue in parallel with the current building boom. In addition, the time required for receiving the permit for a solar water heating installation from the County can take up to several weeks in West Hawaii, which is the prime market for solar water heating. This is due to insufficient County resources to process construction permits combined with the fact that solar permits, although simpler to evaluate and process, are not given any priority over other construction permits, so they languish in the backlog.

Other issues to consider include the following:

- Product availability: It may be difficult for installers to provide the equipment in a timely manner. It may be necessary for HELCO to work with the manufacturers from the mainland to ensure that enough product is made available to contractors on the Island;
- Customer cost: A solar water heating system is a high-cost purchase for most customers. With the $1,000 incentive HELCO offers for solar water heaters under the current REWH program, customers still bear significant out-of-pocket expenses at $1,964, even after all the tax credits are taken into account. This is a barrier to participation. By raising that

incentive to $1,500 (as is specified under Scenario A) and $2,000 (as specified under Scenario B), the customer's out-of-pocket investment will be significantly lowered. Of course, Scenario C takes away nearly all of the customer's cost burden. The theory behind expanding the solar water heating program to participation levels conveyed in Scenarios A-C would result in significant increases in the number of participants. Thus, if incentives are increased, it is safe to assume that participation barriers will be diminished. Note that this analysis did not consider the possibility of having alternate incentives for retrofit versus new construction. There is a valid argument that higher incentive levels are warranted for the retrofit market because of the market and sales barriers identified above. However, offering different incentive levels can be difficult to implement with an uncertain effect on the market. Different incentive levels for the same energy efficiency measure, solar water heating, would increase administrative costs, potential gaming of the program, and customer complaints.

- Multi-family installations: While they have been counted in the total eligible population, it will be difficult to encourage non-owner multi-family residents to participate in the program due to their short-term investment horizon. However, if it could be shown that the program could be entirely financed from the savings on their monthly bills, then it might be more feasible for the multi-family segment to participate more fully in the program.
- Potential inconsistency with HECO's REWH program: Given the aggressive nature of this program, it is probable that the proposed program levels (Scenarios A or B) will exceed HECO's plans for its comparable program. Incentive levels for HELCO's REWH program are already $250 higher than HECO offers its customers. Under Scenario B, the proposed $2,000 incentive would exceed HECO's $750 incentive by $1,250, raising potential questions of fairness and balance.

5.2 Recommendations

Several recommendations are offered to HELCO in terms of next steps.

1. Develop a detailed program plan. Given the challenges of expanding a program that is already difficult to implement at current levels, HELCO should develop a detailed program plan that further articulates the barriers that have been identified in this report, conducts extensive research of the available market exploring ways to overcome those barriers, and presents a detailed plan for implementation.
2. Expand HELCO program personnel. At current staffing levels, it will be impossible for HELCO to embark on any scenario outlined in this report, including the Preferred Scenario. It is essential that HELCO recruit and hire additional professionals with industry experience to engage in program management, marketing, quality control and technical support.
3. Coordinate extensively with the installer community. The potential doubling or tripling of solar water heater installations relative to current levels will present a significant challenge to the installer community. HELCO should meet with installers to develop a plan for marketing the program and bringing in additional installation resources from other

parts of the state and the mainland. HELCO should consider qualifying contractors for the program and specifying terms of reference that specify partnerships with mainland contractors that can rapidly deploy the resources to meet the anticipated demands brought about by the expanded marketing and incentive levels. One suggestion was that HELCO could run a centralized marketing and sales effort for all the contractors. This approach would require that HELCO do the initial field measurements and provide a consistent set of site parameters upon which contractors could bid on.

4. Coordinate planning efforts with HECO's program. Given potentially significant differences in incentive levels between HELCO and HECO REWH programs, it is important that both companies coordinate their efforts and anticipate the key issues that may be raised by outside parties. In addition, comparisons should be made in the number of projected participants for the two programs and the projected savings to ensure that the differences are identified and rationale are provided as to cause of these differences.

5. Develop additional economic incentives. It is recommended that additional incentives be provided to customers to help offset their out-of-pocket costs associated with the solar water heating equipment. Many customers cannot come up with their portion of the capital cost for the equipment. The benchmark research indicated that many utilities offer low- or no-interest financing to cover the balance owed on the equipment. Customers pay back the cost of the equipment through bill charges. Many times, the customer's bill savings roughly equate to the monthly payment necessary to service the loan. HELCO should build on its existing 0% and 3% loan program, which is a partnership with the Credit Union of Hawaii that offers eligible customers a finance package for those who qualify under the program's guidelines. Regardless of the loan options, it is important to stress that customers must be required to pay some amount of money up-front to ensure that they have a financial stake in the equipment.

6. Consider potential HELCO ownership of equipment. This option could be provided as a further incentive for customers to participate. For a limited number of customers, HELCO would install the equipment at their own cost, and lease back the water heating service to the customers. The customers would be responsible for paying the electricity cost associated with electric backup water heating. These types of lease-back arrangements have worked well for other utilities in the past however such practices are not very common in the industry. However, several hurdles existing with this approach. For example, HECO's experience with this approach proved to be extremely complicated. The cost of capital, the need for subsidization, whether the system cost would be higher than without company ownership, etc. were some of the difficulties that they experienced.

5.3 Conclusions

Based on this assessment, it is technically possible to consider any of the scenarios outlined in this report. However, without a significant commitment of resources (both internal and external), it would be challenging for HELCO to implement the program beyond the participation levels that it currently achieves in the existing REWH Program. This assessment works under the assumption that participation levels for solar water heaters are directly correlated with the amount

of incentive that a customer receives. According to a January 2002 report by DBEDT, this fact is borne out by historical data.[5] Between 1977 and 2004, whenever incentives were increased (either because state tax credits were increased or utility rebates were introduced), the number of solar water heater installations increased dramatically.

It is fair to conclude that should HELCO consider an increase in it is incentive levels – combined with an increase in the administration needed to bring about a program expansion – it will see a larger number of participants for the program and a higher savings impact. However, given the fact that the benefit-cost tests are significantly reduced under any of the three scenarios and due to the difficulties of increasing participation levels, HELCO should only consider a modest expansion of its solar water heating program as was done in the Preferred Scenario developed for IRP-3 or possibly setting as a goal the level outlined in Scenario A. There is sufficient market capacity for these options, Moving beyond the Scenario A incentive and participation levels does not appear to be sustainable given the market barriers and implementation issues noted in this assessment.

[5] Energy Policy Task Force, DBEDT January 2002, Appendix D, The Economic and Fiscal Impacts of the Hawaii Solar Water Heating System Energy Conservation Income Tax Credit.

APPENDIX A:
PROGRAM ANALYSIS INPUTS

TABLE A1: YEAR 1 (2007) BUDGET DETAIL -- SOLAR WATER HEATER PROGRAM ANALYSIS

Program	Incentive Expenditures	Program Administration Expenditures								
		HELCO Direct Labor		Outside Services (2)	Marketing and Advertising (3)	Other (4)	Monitoring & Evaluation (5)	Total Admin	Return on Costs (6)	TOTAL PROGRAM
		Budget (1)	FTEs							
IRP3 Preferred Scenario (7)	$500,000	$118,125	*2.25*	*$66,500*	*$21,000*	*$7,000*	$25,297	$237,922	$96,251	$834,172
Scenario A: Super Solar Water Heater	$1,200,000	$300,000	*4.00*	*$80,000*	*$60,000*	*$10,000*	$76,500	$526,500	$225,196	$1,951,696
Scenario B: Super Super Solar Water Heater	$2,400,000	$450,000	*6.00*	*$100,000*	*$100,000*	*$20,000*	$113,900	$783,900	$415,291	$3,599,191
Scenario C: Maximum Incentive Solar Water Heater	$4,500,000	$600,000	*8.00*	*$120,000*	*$150,000*	*$30,000*	$153,000	$1,053,000	$724,304	$6,277,304

SOURCES/NOTES:

(1) Fully burdened labor rate (weighted average across all labor categories) = *$75,000* per year

(2) Outside services include cost associated with installation verification, technical assistance and other miscellaneous services provided by contractors. Amount consistent with HELCO's existing program level

(3) Marketing initiative conducted by HELCO as public awareness campaign and HELCO serving as the major marketer for solar water heating systems on the island.

(4) Other costs include inspection services, engineering support, inter-company charges, etc.

(5) M&E costs represent percentage of all other program admin. costs. Percentage equal to: *17%* Based on HELCO's 2004 DSM budget for REWH program.
These values are assumed to be normalized costs over a multi-year period where different M&E activities may necessitate higher or lower costs to be expended in any given year.

(6) Return on Costs (e.g., shareholder incentive) estimated using percentage of program costs derived from recently-filed HECO 2005 Test Year rate case testimony, applied to all programs except RDLC, CILM and RTOU. Value =*13.04%*
Value included for screening purposes and is not necessarily reflective of the amounts that HELCO currently incurs for its DSM programs or will incur for future programs.

(7) IRP-3 Preferred Scenario includes expense categories for both REWH and RNC, solar water heating components (to the extent that those costs were able to be separated). For costs that could not be isolated to solar water heating only, a 70% factor was applied to estimate the true cost of solar water heating alone.

(8) Annual cost escalation rate for future years = *3.8%*

(9) Values shown in italics are input parameters.

TABLE A2: BACKUP FOR COMPONENT/PROGRAM LEVEL SAVINGS, PARTICIPANTS AND COSTS
RESIDENTIAL EFFICIENT WATER HEATING PROGRAM (RWH) (FROM IRP3 PREFERRED SCENARIO)

SUMMARY - 2007 PROGRAM DETAILS

Program/Measures	No. of Participants	Aggregate Impact (Gross/Customer Level) Annual Energy (kWh)	Peak Demand (kW)	Aggregated Program Costs Incentives (b)		
Residential Efficient Water Heating (1)						
a. Solar Water Heat	*500*	956,000	227	$ 500,000		
TOTAL	500	956,000	227	$ 500,000		

ENERGY AND DEMAND SAVINGS

Program/Measures		Per-Participant Impact (5) Annual Energy (kWh)	Peak Demand (kW)	Comments
Residential Efficient Water Heating				
a. Solar Water Heat		*1,912*	*0.453*	HELCO value from A&S report (3)

EQUIPMENT COST AND INCENTIVES

Program/Measures	Unit Cost (3)(6)	Rebate Amount		Total Equipment Cost	Total Incentive Cost	Comments
Residential Efficient Water Heating						
a. Solar Water Heat	$ *2,500.00*	$ 1,000		$ 1,250,000	$ 500,000	Equipment cost assumed net of outside tax credits (e.g., from the State) (7)
TOTAL				$ 1,250,000	$ 500,000	

OTHER COST ASSUMPTIONS

SOURCES/NOTES:
(1) This analysis is represented for existing and new homes.
(2) M&E Report November 29, 2002.
(3) A&S Report March 31, 2003.
(4) Data extracted from Building Energy Simulation Tool (BEST) model runs developed by HELCO consultant GEP specifically for this project.
(5) Per-participant impacts represented at the Customer Level.
(6) Values shown in italics are input parameters.
(7) Tax credit amount assumed to be $1504. Source: Phase I Study, Table H-1 indicates total installed cost for solar water heater of $4040.
Credit amount per year equals: $752,000

CA-IR-267
DOCKET NO. 05-0315
PAGE 28 OF 40

TABLE A3: BACKUP FOR COMPONENT/PROGRAM LEVEL SAVINGS, PARTICIPANTS AND COSTS
SCENARIO A -- SUPER SOLAR WATER HEAT PROGRAM

SUMMARY - 2007 PROGRAM DETAILS

Program/Measures	No. of Participants	Aggregate Impact (Gross/Customer Level) Annual Energy (kWh)	Peak Demand (kW)	Aggregated Program Costs Incentives		
Residential Efficient Water Heating (1)						
a. Solar Water Heat	*800*	1,529,600	362	$ 1,200,000		
TOTAL	800	1,529,600	362	$ 1,200,000		

ENERGY AND DEMAND SAVINGS

Program/Measures		Per-Participant Impact (2)(3) Annual Energy (kWh)	Peak Demand (kW)	Comments
Residential Efficient Water Heating (1)				
a. Solar Water Heat		*1,912*	*0.453*	Updated savings values

EQUIPMENT COST AND INCENTIVES

Program/Measures	Unit Cost (4)	Rebate Amount		Total Equipment Cost	Total Incentive Cost	Comments
Residential Efficient Water Heating (1)						
a. Solar Water Heat	$ 3,092.50	$ 1,500		$ 2,474,000	$ 1,200,000	Equipment cost assumed net of outside tax credits (e.g., from the State) (7)
TOTAL				$ 2,474,000	$ 1,200,000	

SOURCES/NOTES:
(1) This analysis is represented for existing and new homes.
(2) A&S Report May 31, 2005, Attachment B Update of DSMIS Unit Saving Values based on the 2001-2003 Impact Evaluation Study (Xenergy) May 2005, Table 1-1.
(3) Per-participant impacts represented at the Customer Level.
(4) Total cost reflects customer cost of equipment only after tax credits from state and federal (see equipment cost calculations below)
(5) Values shown in italics are input parameters.

Equipment Cost Calculations:

Average Equipment Cost	5,000	Based on review of DSMIS data for period 1996 to 2005; average cost of $4,770 escalated to $5,000
HELCO rebate	1,500	to account for known price increases over the past few years.
Net after HELCO Rebate	3,500	
Federal Tax Credit (30% of net cost after	1,050	Note: Credit expires on 1/1/09. Amount is netted out of net cost to customer starting in 2009
Net after HELCO Rebate and Fed Tax cre	2,450	
State Tax Credit (35% of installed cost les	858	
Net Cost to Customer	1,593	

CA-IR-267
DOCKET NO. 05-0315
PAGE 29 OF 40

TABLE A4: BACKUP FOR COMPONENT/PROGRAM LEVEL SAVINGS, PARTICIPANTS AND COSTS
SCENARIO B – SUPER SUPER SOLAR WATER HEAT PROGRAM

SUMMARY - 2007 PROGRAM DETAILS

Program/Measures	No. of Participants	Aggregate Impact (Gross/Customer Level) Annual Energy (kWh)	Peak Demand (kW)	Aggregated Program Costs Incentives		
Residential Efficient Water Heating (1)						
a. Solar Water Heat	1,200	2,294,400	544	$ 2,400,000		
TOTAL	1,200	2,294,400	544	$ 2,400,000		

ENERGY AND DEMAND SAVINGS

Program/Measures		Per-Participant Impact (2)(3) Annual Energy (kWh)	Peak Demand (kW)	Comments
Residential Efficient Water Heating (1)				
a. Solar Water Heat		1,912	0.453	Updated savings values

EQUIPMENT COST AND INCENTIVES

Program/Measures	Unit Cost (4)	Rebate Amount		Total Equipment Cost	Total Incentive Cost	Comments
Residential Efficient Water Heating (1)						
a. Solar Water Heat	$ 3,365.00	$ 2,000		$ 4,038,000	$ 2,400,000	Equipment cost assumed net of outside tax credits (e.g., from the State) (7)
TOTAL				$ 4,038,000	$ 2,400,000	

SOURCES/NOTES:
(1) This analysis is represented for existing and new homes.
(2) A&S Report May 31, 2005, Attachment B Update of DSMIS Unit Saving Values based on the 2001-2003 Impact Evaluation Study (Xenergy) May 2005, Table 1-1.
(3) Per-participant impacts represented at the Customer Level.
(4) Total cost reflects customer cost of equipment only after tax credits from state and federal (see equipment cost calculations below)
(5) Values shown in italics are input parameters.

Equipment Cost Calculations:

Average Equipment Cost	5,000	Based on review of DSMIS data for period 1996 to 2005; average cost of $4,770 escalated to $5,000
HELCO rebate	2,000	to account for known price increases over the past few years.
Net after HELCO Rebate	3,000	
Federal Tax Credit (30% of net cost after	900	Note: Credit expires on 1/1/09. Amount is netted out of net cost to customer starting in 2009
Net after HELCO Rebate and Fed Tax cre	2,100	
State Tax Credit (35% of installed cost les	735	
Net Cost to Customer	1,365	

TABLE A5: BACKUP FOR COMPONENT/PROGRAM LEVEL SAVINGS, PARTICIPANTS AND COSTS
SCENARIO C – MAXIMUM INCENTIVE SOLAR WATER HEAT PROGRAM

SUMMARY - 2007 PROGRAM DETAILS

		Aggregate Impact (Gross/Customer Level)		Aggregated Program Costs		
Program/Measures	No. of Participants	Annual Energy (kWh)	Peak Demand (kW)	Incentives		
Residential Efficient Water Heating (1)						
a. Solar Water Heat	1,500	2,868,000	880	$ 4,500,000		
TOTAL	1,500	2,868,000	880	$ 4,500,000		

ENERGY AND DEMAND SAVINGS

		Per-Participant Impact (2)(3)		
Program/Measures		Annual Energy (kWh)	Peak Demand (kW)	Comments
Residential Efficient Water Heating (1)				
a. Solar Water Heat		*1,912*	*0.453*	Updated savings values

EQUIPMENT COST AND INCENTIVES

	Unit Cost (4)	Rebate Amount		Total Equipment Cost	Total Incentive Cost	Comments
Program/Measures						
Residential Efficient Water Heating (1)						
a. Solar Water Heat	$ 3,910.00	$ 3,000		$ 5,865,000	$ 4,500,000	Equipment cost assumed net of outside tax credits (e.g., from the State and Federal Govt.)
TOTAL				$ 5,865,000	$ 4,500,000	

SOURCES/NOTES:
(1) This analysis is represented for existing and new homes.
(2) A&S Report May 31, 2005, Attachment B Update of DSMIS Unit Saving Values based on the 2001-2003 Impact Evaluation Study (Xenergy) May 2005, Table 1-1.
(3) Per-participant impacts represented at the Customer Level.
(4) Total cost reflects customer cost of equipment only after tax credits from state and federal (see equipment cost calculations below)
(5) Values shown in italics are input parameters.

Equipment Cost Calculations:

Average Equipment Cost	5,000	Based on review of DSMIS data for period 1996 to 2005; average cost of $4,770 escalated to $5,000
HELCO rebate	3,000	to account for known price increases over the past few years.
Net after HELCO Rebate	2,000	
Federal Tax Credit (30% of net cost after	600	Note: Credit expires on 1/1/09. Amount is netted out of net cost to customer starting in 2009
Net after HELCO Rebate and Fed Tax cre	1,400	
State Tax Credit (35% of installed cost les	490	
Net Cost to Customer	910	

TABLE A6: REVIEW OF POPULATION EFFECTS

Number of Existing Households: 31000

Number of New Households/yr: 900

			Scenario A			Scenario B			Scenario B		
	Year	Total HH in the Year	New Participants	Cumulative Participants	% of Population	New Participants	Cumulative Participants	% of Population	New Participants	Cumulative Participants	% of Population
1	2007	31000	800	800	3%	1,200	1,200	4%	1,500	1,500	5%
2	2008	31900	800	1,600	5%	1,200	2,400	8%	1,500	3,000	9%
3	2009	32800	800	2,400	7%	1,200	3,600	11%	1,500	4,500	14%
4	2010	33700	800	3,200	9%	1,200	4,800	14%	1,500	6,000	18%
5	2011	34600	800	4,000	12%	1,200	6,000	17%	1,500	7,500	22%
6	2012	35500	800	4,800	14%	1,200	7,200	20%	1,500	9,000	25%
7	2013	36400	800	5,600	15%	1,200	8,400	23%	1,500	10,500	29%
8	2014	37300	800	6,400	17%	1,200	9,600	26%	1,500	12,000	32%
9	2015	38200	800	7,200	19%	1,200	10,800	28%	1,500	13,500	35%
10	2016	39100	800	8,000	20%	1,200	12,000	31%	1,500	15,000	38%
11	2017	40000	800	8,800	22%	1,200	13,200	33%	1,500	16,500	41%
12	2018	40900	800	9,600	23%	1,200	14,400	35%	1,500	18,000	44%
13	2019	41800	800	10,400	25%	1,200	15,600	37%	1,500	19,500	47%
14	2020	42700	800	11,200	26%	1,200	16,800	39%	1,500	21,000	49%
15	2021	43600	800	12,000	28%	1,200	18,000	41%	1,500	22,500	52%
16	2022	44500	800	12,800	29%	1,200	19,200	43%	1,500	24,000	54%
17	2023	45400	800	13,600	30%	1,200	20,400	45%	1,500	25,500	56%
18	2024	46300	800	14,400	31%	1,200	21,600	47%	1,500	27,000	58%
19	2025	47200	800	15,200	32%	1,200	22,800	48%	1,500	28,500	60%
20	2026	48100	800	16,000	33%	1,200	24,000	50%	1,500	30,000	62%

TABLE A7: HELCO PROJECTED PROGRAM SAVINGS - 2007-2026 – GROSS SYSTEM LEVEL

kWh Impact (New Participants)

Program	Prog. Life	Year 1 Impact	2007	2008	2009	2010	2011	2012	2013	2014	2015	2016	2017	2018	2019	2020	2021	2022	2023	2024	2025	2026
Scenario A	20	1,737,302	1,737,302	1,737,302	1,737,302	1,737,302	1,737,302	1,737,302	1,737,302	1,737,302	1,737,302	1,737,302	1,737,302	1,737,302	1,737,302	1,737,302	1,737,302	1,737,302	1,737,302	1,737,302	1,737,302	1,737,302
Scenario B	20	2,606,086	2,606,086	2,606,086	2,606,086	2,606,086	2,606,086	2,606,086	2,606,086	2,606,086	2,606,086	2,606,086	2,606,086	2,606,086	2,606,086	2,606,086	2,606,086	2,606,086	2,606,086	2,606,086	2,606,086	2,606,086
Scenario C	20	3,257,610	3,257,610	3,257,610	3,257,610	3,257,610	3,257,610	3,257,610	3,257,610	3,257,610	3,257,610	3,257,610	3,257,610	3,257,610	3,257,610	3,257,610	3,257,610	3,257,610	3,257,610	3,257,610	3,257,610	3,257,610

kWh Impact (Cumulative)

Program	Equip Life	Year 1 Impact	2007	2008	2009	2010	2011	2012	2013	2014	2015	2016	2017	2018	2019	2020	2021	2022	2023	2024	2025	2026
Scenario A	15	1,737,302	1,737,302	3,474,604	5,212,176	6,948,508	8,686,080	10,424,353	12,161,745	13,898,137	15,636,629	17,373,921	19,111,313	20,848,705	22,586,097	24,323,488	26,060,881	26,060,881	26,060,881	26,060,881	26,060,881	26,060,881
Scenario B	15	2,606,086	2,606,086	5,212,176	7,818,264	10,424,353	13,030,441	15,636,529	18,242,617	20,848,705	23,454,793	26,060,881	28,666,970	31,273,058	33,879,146	36,485,234	39,091,322	39,091,322	39,091,322	39,091,322	39,091,322	39,091,322
Scenario C	15	3,257,610	3,257,610	6,515,220	9,772,831	13,030,441	16,288,051	19,545,661	22,803,271	26,060,881	29,318,492	32,576,102	35,833,712	39,091,322	42,348,932	45,606,542	48,864,153	48,864,153	48,864,153	48,864,153	48,864,153	48,864,153

kW Impact (New Participants)

Program	Prog. Life	Year 1 Impact	2007	2008	2009	2010	2011	2012	2013	2014	2015	2016	2017	2018	2019	2020	2021	2022	2023	2024	2025	2026
Scenario A	20	412	412	412	412	412	412	412	412	412	412	412	412	412	412	412	412	412	412	412	412	412
Scenario B	20	617	617	617	617	617	617	617	617	617	617	617	617	617	617	617	617	617	617	617	617	617
Scenario C	20	772	772	772	772	772	772	772	772	772	772	772	772	772	772	772	772	772	772	772	772	772

kW Impact (Cumulative)

Program	Equip Life	Year 1 Impact	2007	2008	2009	2010	2011	2012	2013	2014	2015	2016	2017	2018	2019	2020	2021	2022	2023	2024	2025	2026
Scenario A	15	412	412	823	1,235	1,647	2,059	2,470	2,881	3,293	3,705	4,116	4,528	4,940	5,351	5,763	6,174	6,174	6,174	6,174	6,174	6,174
Scenario B	15	617	617	1,235	1,852	2,470	3,087	3,705	4,322	4,940	5,557	6,174	6,792	7,409	8,027	8,644	9,262	9,262	9,262	9,262	9,262	9,262
Scenario C	15	772	772	1,544	2,316	3,087	3,859	4,631	5,403	6,174	6,946	7,718	8,490	9,262	10,034	10,805	11,577	11,577	11,577	11,577	11,577	11,577

APPENDIX B:
PRELIMINARY B/C RESULTS

TABLE B-1: DETAILED SUMMARY FOR 2007 START YEAR – HELCO SUMMARY
SUPER SOLAR WATER HEATER PROGRAM (SCENARIO A)

Avoided Costs Scenario: Medium Fuel Price Forecast

Discount Rate	8.42%
General Escalation Rate	3.96%

	Benefits	Costs	Net Benefits	B/C Ratio
Participant Test	$28,349,136	$32,884,265	($4,535,129)	0.86
Ratepayer Impact Measure Test	$13,548,095	$54,979,892	($41,431,798)	0.25
Utility Cost Test	$13,548,095	$26,630,756	($13,082,662)	0.51
Total Resource Cost Test	$13,548,095	$43,141,101	($29,593,007)	0.31

		2007	2008	2009	2010	2011	2012	2013	2014	2015	2016	2017	2018	2019	2020	2021	2022	2023	2024	2025	2026
Cumulative Net Savings																					
Demand (kW)		300	601	901	1,202	1,502	1,803	2,103	2,404	2,704	3,005	3,305	3,606	3,906	4,207	4,507	4,507	4,507	4,507	4,507	4,507
Annual kWh		1,268,276	2,536,592	3,804,889	5,073,185	6,341,481	7,609,777	8,878,074	10,146,370	11,414,666	12,682,962	13,951,259	15,219,555	16,487,851	17,756,147	19,024,443	19,024,443	19,024,443	19,024,443	19,024,443	19,024,443
Total Energy (kWH)		1,268,276	2,536,592	3,804,889	5,073,185	6,341,481	7,609,777	8,878,074	10,146,370	11,414,666	12,682,962	13,951,259	15,219,555	16,487,851	17,756,147	19,024,443	19,024,443	19,024,443	19,024,443	19,024,443	19,024,443
Rates																					
Summer Demand ($/kW)		$0.00	$0.00	$0.00	$0.00	$0.00	$0.00	$0.00	$0.00	$0.00	$0.00	$0.00	$0.00	$0.00	$0.00	$0.00	$0.00	$0.00	$0.00	$0.00	$0.00
Average Energy ($/kWH)		$0.1914	$0.1986	$0.2062	$0.2140	$0.2222	$0.2306	$0.2394	$0.2485	$0.2579	$0.2677	$0.2779	$0.2884	$0.2994	$0.3108	$0.3226	$0.3348	$0.3476	$0.3608	$0.3745	$0.3887
		2007	2008	2009	2010	2011	2012	2013	2014	2015	2016	2017	2018	2019	2020	2021	2022	2023	2024	2025	2026
BENEFIT CALCULATIONS:																					
Avoided Costs (Utility, Ratepayer)	NPV																				
Demand (kW)		$42,837	$88,929	$138,463	$191,632	$248,643	$309,710	$375,058	$444,926	$519,563	$599,229	$684,200	$774,763	$871,221	$973,891	$1,083,106	$1,124,264	$1,166,986	$1,211,332	$1,257,362	$1,305,142
Annual kWh		$80,698	$168,275	$267,233	$364,901	$476,099	$588,768	$720,884	$528,269	$871,221	$1,067,577	$1,168,684	$1,354,433	$1,559,905	$1,614,486	$1,808,736	$1,866,769	$1,899,635	$1,986,891	$2,070,135	$2,153,063
Total	$13,548,095	$123,535	$257,204	$405,695	$556,533	$724,742	$898,477	$1,095,942	$973,196	$1,390,783	$1,666,806	$1,852,884	$2,129,196	$2,431,124	$2,588,377	$2,891,842	$2,991,033	$3,066,621	$3,198,223	$3,327,497	$3,458,205
Avoided Costs (Total Resource)																					
Demand (kW)		$42,837	$88,929	$138,463	$191,632	$248,643	$309,710	$375,058	$444,926	$519,563	$599,229	$684,200	$774,763	$871,221	$973,891	$1,083,106	$1,124,264	$1,166,986	$1,211,332	$1,257,362	$1,305,142
Annual kWh		$80,698	$168,275	$267,233	$364,901	$476,099	$588,768	$720,884	$528,269	$871,221	$1,067,577	$1,168,684	$1,354,433	$1,559,905	$1,614,486	$1,808,736	$1,866,769	$1,899,635	$1,986,891	$2,070,135	$2,153,063
Total	$13,548,095	$123,535	$257,204	$405,695	$556,533	$724,742	$898,477	$1,095,942	$973,196	$1,390,783	$1,666,806	$1,852,884	$2,129,196	$2,431,124	$2,588,377	$2,891,842	$2,991,033	$3,066,621	$3,198,223	$3,327,497	$3,458,205
Avoided Costs (Participant)																					
Electric Demand		$0	$0	$0	$0	$0	$0	$0	$0	$0	$0	$0	$0	$0	$0	$0	$0	$0	$0	$0	$0
Electric		$242,714	$503,874	$784,532	$1,085,792	$1,408,815	$1,754,820	$2,125,087	$2,520,960	$2,943,851	$3,395,242	$3,876,687	$4,389,820	$4,936,352	$5,518,083	$6,136,896	$6,370,098	$6,612,162	$6,863,424	$7,124,234	$7,394,955
Total	$28,349,136	$242,714	$503,874	$784,532	$1,085,792	$1,408,815	$1,754,820	$2,125,087	$2,520,960	$2,943,851	$3,395,242	$3,876,687	$4,389,820	$4,936,352	$5,518,083	$6,136,896	$6,370,098	$6,612,162	$6,863,424	$7,124,234	$7,394,955
COST CALCULATIONS:																					
Cost Inputs:																					
Program Administration		$751,696	$780,260	$809,910	$840,687	$872,633	$905,793	$940,213	$975,941	$1,013,027	$1,051,522	$1,091,479	$1,132,956	$1,176,008	$1,220,696	$1,267,083	$1,315,232	$1,365,211	$1,417,089	$1,470,938	$1,526,834
Incentives		$1,200,000	$1,245,600	$1,292,933	$1,342,064	$1,393,063	$1,445,999	$1,500,947	$1,557,983	$1,617,186	$1,678,639	$1,742,428	$1,808,640	$1,877,368	$1,948,708	$2,022,759	$2,099,624	$2,179,410	$2,262,227	$2,348,192	$2,437,423
Participant		$1,806,020	$1,874,649	$2,705,624	$2,808,438	$2,915,158	$3,025,934	$3,140,920	$3,260,275	$3,384,165	$3,512,763	$3,646,248	$3,784,806	$3,928,628	$4,077,916	$4,232,877	$4,393,727	$4,560,688	$4,733,994	$4,913,886	$5,100,614
	NPV																				
Total Participant Costs	$32,884,265	$1,806,020	$1,874,649	$2,705,624	$2,808,438	$2,915,158	$3,025,934	$3,140,920	$3,260,275	$3,384,165	$3,512,763	$3,646,248	$3,784,806	$3,928,628	$4,077,916	$4,232,877	$4,393,727	$4,560,688	$4,733,994	$4,913,886	$5,100,614
Total RIM Costs	$54,979,892	$2,194,410	$2,529,734	$2,887,575	$3,268,545	$3,674,510	$4,106,612	$4,566,247	$5,054,884	$5,574,064	$6,125,403	$6,710,595	$7,331,416	$7,989,729	$8,687,487	$9,426,738	$9,784,954	$10,156,782	$10,542,740	$10,943,364	$11,359,212
Total Utility Costs	$26,630,756	$1,951,696	$2,025,860	$2,102,843	$2,182,751	$2,265,675	$2,351,792	$2,441,160	$2,533,924	$2,630,213	$2,730,161	$2,833,907	$2,941,596	$3,053,376	$3,169,405	$3,289,842	$3,414,856	$3,544,623	$3,679,316	$3,819,130	$3,964,257
Total TRC Costs	$43,141,101	$2,557,716	$2,654,909	$3,515,534	$3,649,124	$3,787,791	$3,931,727	$4,081,133	$4,236,216	$4,397,192	$4,564,285	$4,737,728	$4,917,762	$5,104,636	$5,298,613	$5,499,960	$5,708,958	$5,925,899	$6,151,085	$6,384,824	$6,627,447

TABLE B-2: DETAILED SUMMARY FOR 2007 START YEAR – HELCO SUMMARY
SUPER SUPER SOLAR WATER HEAT PROGRAM (SCENARIO B)

Avoided Costs Scenario: Medium Fuel Price Forecast

Discount Rate	6.12%
General Escalation Rate	3.00%

	Benefits	Costs	Net Benefits	B/C Ratio
Participant Test	$34,950,990	$33,058,943	$1,892,046	1.06
Ratepayer Impact Measure Test	$16,703,130	$84,061,714	($67,358,583)	0.20
Utility Cost Test	$16,703,130	$49,110,724	($32,407,594)	0.34
Total Resource Cost Test	$16,703,130	$58,359,182	($41,656,051)	0.29

		2007	2008	2009	2010	2011	2012	2013	2014	2015	2016	2017	2018	2019	2020	2021	2022	2023	2024	2025	2026
Cumulative Net Savings																					
Demand (kW)		370	741	1,111	1,482	1,853	2,223	2,593	2,964	3,334	3,705	4,075	4,446	4,816	5,187	5,557	5,557	5,557	5,557	5,557	5,557
Annual kWh		1,563,653	3,127,306	4,690,959	6,254,612	7,818,264	9,381,917	10,945,570	12,509,223	14,072,876	15,636,529	17,200,182	18,763,835	20,327,488	21,891,140	23,454,793	23,454,793	23,454,793	23,454,793	23,454,793	23,454,793
Total Energy ($/YR)																					
Rates																					
Summer Demand ($/kW)		$0.00	$0.00	$0.00	$0.00	$0.00	$0.00	$0.00	$0.00	$0.00	$0.00	$0.00	$0.00	$0.00	$0.00	$0.00	$0.00	$0.00	$0.00	$0.00	$0.00
Average Energy ($/kWH)		$0.1714	$0.1986	$0.2062	$0.2140	$0.2222	$0.2306	$0.2394	$0.2485	$0.2579	$0.2677	$0.2779	$0.2884	$0.2994	$0.3108	$0.3226	$0.3348	$0.3476	$0.3608	$0.3745	$0.3887
		2007	2008	2009	2010	2011	2012	2013	2014	2015	2016	2017	2018	2019	2020	2021	2022	2023	2024	2025	2026
BENEFIT CALCULATIONS:																					
Avoided Costs (Utility, Ratepayer)	NPV																				
Demand (kW)		$53,812	$109,639	$170,707	$236,259	$306,546	$381,834	$462,401	$548,539	$640,557	$738,776	$843,534	$955,187	$1,074,108	$1,200,688	$1,335,336	$1,386,079	$1,438,750	$1,493,422	$1,550,173	$1,609,079
Annual kWh		$99,491	$207,463	$329,465	$449,878	$586,972	$725,878	$888,761	$651,291	$1,074,108	$1,316,190	$1,440,844	$1,669,849	$1,923,169	$1,990,462	$2,229,949	$2,301,496	$2,342,016	$2,449,592	$2,552,222	$2,654,462
Total	$16,703,130	$153,304	$317,101	$500,172	$686,137	$893,518	$1,107,712	$1,351,162	$1,199,830	$1,714,665	$2,054,966	$2,284,378	$2,625,036	$2,997,277	$3,191,150	$3,565,285	$3,687,575	$3,780,766	$3,943,014	$4,102,394	$4,263,541
Avoided Costs (Total Resource)																					
Demand (kW)		$53,812	$109,639	$170,707	$236,259	$306,546	$381,834	$462,401	$548,539	$640,557	$738,776	$843,534	$955,187	$1,074,108	$1,200,688	$1,335,336	$1,386,079	$1,438,750	$1,493,422	$1,550,173	$1,609,079
Annual kWh		$99,491	$207,463	$329,465	$449,878	$586,972	$725,878	$888,761	$651,291	$1,074,108	$1,316,190	$1,440,844	$1,669,849	$1,923,169	$1,990,462	$2,229,949	$2,301,496	$2,342,016	$2,449,592	$2,552,222	$2,654,462
Total	$16,703,130	$153,304	$317,101	$500,172	$686,137	$893,518	$1,107,712	$1,351,162	$1,199,830	$1,714,665	$2,054,966	$2,284,378	$2,625,036	$2,997,277	$3,191,150	$3,565,285	$3,687,575	$3,780,766	$3,943,014	$4,102,394	$4,263,541
Avoided Costs (Participant)																					
Electric Demand		$0	$0	$0	$0	$0	$0	$0	$0	$0	$0	$0	$0	$0	$0	$0	$0	$0	$0	$0	$0
Electric		$299,236	$621,214	$967,231	$1,338,648	$1,736,895	$2,163,477	$2,619,970	$3,108,033	$3,629,406	$4,185,915	$4,779,478	$5,412,107	$6,085,914	$6,803,115	$7,566,036	$7,853,546	$8,151,980	$8,461,756	$8,783,302	$9,117,068
Total	$34,950,990	$299,236	$621,214	$967,231	$1,338,648	$1,736,895	$2,163,477	$2,619,970	$3,108,033	$3,629,406	$4,185,915	$4,779,478	$5,412,107	$6,085,914	$6,803,115	$7,566,036	$7,853,546	$8,151,980	$8,461,756	$8,783,302	$9,117,068
COST CALCULATIONS:																					
Cost Inputs:																					
Program Administration		$1,199,191	$1,244,761	$1,292,061	$1,341,160	$1,392,124	$1,445,025	$1,499,936	$1,556,933	$1,616,097	$1,677,508	$1,741,254	$1,807,421	$1,876,103	$1,947,393	$2,021,396	$2,098,209	$2,177,941	$2,260,703	$2,346,610	$2,435,781
Incentives		$2,300,000	$2,491,200	$2,585,864	$2,684,128	$2,786,125	$2,891,998	$3,001,894	$3,115,966	$3,234,373	$3,357,279	$3,484,856	$3,617,280	$3,754,737	$3,897,417	$4,045,518	$4,199,248	$4,358,820	$4,524,455	$4,696,384	$4,874,847
Participant		$2,172,800	$2,514,866	$3,434,342	$3,564,847	$3,700,312	$3,840,923	$3,986,879	$4,138,380	$4,295,638	$4,458,873	$4,628,310	$4,804,186	$4,986,745	$5,176,241	$5,372,938	$5,577,110	$5,789,041	$6,009,023	$6,237,366	$6,474,386
	NPV																				
Total Participant Costs	$33,058,943	$2,422,800	$2,514,866	$2,610,431	$2,709,628	$2,812,594	$2,919,472	$3,030,412	$3,145,568	$3,265,099	$3,389,173	$3,517,962	$3,651,644	$3,790,407	$3,934,442	$4,083,951	$4,239,141	$4,400,228	$4,567,457	$4,741,000	$4,921,158
Total RIM Costs	$84,061,714	$3,898,428	$4,357,175	$4,845,358	$5,363,936	$5,915,145	$6,500,499	$7,121,800	$7,780,932	$8,479,875	$9,220,702	$10,005,587	$10,836,838	$11,716,754	$12,647,927	$13,632,951	$14,151,003	$14,688,741	$15,246,913	$15,826,296	$16,427,695
Total Utility Costs	$49,110,724	$3,599,191	$3,735,961	$3,877,927	$4,025,288	$4,178,249	$4,337,023	$4,501,830	$4,672,899	$4,850,469	$5,034,787	$5,226,109	$5,424,701	$5,630,840	$5,844,812	$6,066,915	$6,297,457	$6,536,761	$6,785,158	$7,042,994	$7,310,627
Total TRC Costs	$58,359,182	$3,621,991	$3,759,627	$4,726,404	$4,906,007	$5,092,436	$5,285,948	$5,486,814	$5,695,313	$5,911,735	$6,136,381	$6,369,563	$6,611,607	$6,862,848	$7,123,636	$7,394,334	$7,675,319	$7,966,981	$8,269,726	$8,583,976	$8,910,167

CA-IR-267
DOCKET NO. 05-0315
PAGE 36 OF 40

TABLE B-3: DETAILED SUMMARY FOR 2007 START YEAR – HELCO SUMMARY
MAXIMUM INCENTIVE SOLAR WATER HEAT PROGRAM (SCENARIO C)

Avoided Costs Scenario: Medium Fuel Price Forecast

Discount Rate	8.12%
General Escalation Rate	3.85%

	Benefits	Costs	Net Benefits	B/C Ratio
Participant Test	$36,407,281	$40,013,766	($3,606,485)	0.91
Ratepayer Impact Measure Test	$17,399,094	$122,060,678	($104,661,584)	0.14
Utility Cost Test	$17,399,094	$85,653,397	($68,254,303)	0.20
Total Resource Cost Test	$17,399,094	$61,001,454	($44,602,360)	0.28

		2007	2008	2009	2010	2011	2012	2013	2014	2015	2016	2017	2018	2019	2020	2021	2022	2023	2024	2025	2026
Cumulative Net Savings																					
Demand (kW)		386	772	1,158	1,544	1,930	2,315	2,701	3,087	3,473	3,859	4,245	4,631	5,017	5,403	5,789	5,789	5,789	5,789	5,789	5,789
Annual kWh		1,629,605	3,257,610	4,886,415	6,515,220	8,144,025	9,772,831	11,401,636	13,030,441	14,659,246	16,288,051	17,916,856	19,545,661	21,174,466	22,803,271	24,432,076	24,432,076	24,432,076	24,432,076	24,432,076	24,432,076
Total Energy (kWh)		1,629,605	3,257,610	4,886,415	6,515,220	8,144,025	9,772,831	11,401,636	13,030,441	14,659,246	16,288,051	17,916,856	19,545,661	21,174,466	22,803,271	24,432,076	24,432,076	24,432,076	24,432,076	24,432,076	24,432,076
Rates																					
Summer Demand ($/kW)		$0.00	$0.00	$0.00	$0.00	$0.00	$0.00	$0.00	$0.00	$0.00	$0.00	$0.00	$0.00	$0.00	$0.00	$0.00	$0.00	$0.00	$0.00	$0.00	$0.00
Average Energy ($/kWH)		$0.1914	$0.1986	$0.2062	$0.2140	$0.2222	$0.2306	$0.2394	$0.2485	$0.2579	$0.2677	$0.2779	$0.2884	$0.2994	$0.3108	$0.3226	$0.3348	$0.3476	$0.3608	$0.3745	$0.3887
BENEFIT CALCULATIONS:		2007	2008	2009	2010	2011	2012	2013	2014	2015	2016	2017	2018	2019	2020	2021	2022	2023	2024	2025	2026
Avoided Costs (Utility, Ratepayer)	NPV																				
Demand ($/kW)		$55,013	$114,207	$177,020	$244,103	$315,319	$397,744	$481,668	$571,395	$667,247	$769,558	$878,681	$994,987	$1,118,843	$1,250,736	$1,390,975	$1,443,832	$1,486,698	$1,555,648	$1,614,763	$1,676,126
Annual kWh		$103,437	$216,107	$343,192	$468,623	$611,429	$756,123	$925,793	$678,428	$1,118,842	$1,371,052	$1,500,879	$1,739,426	$2,005,300	$2,075,398	$2,322,843	$2,397,592	$2,479,600	$2,551,438	$2,658,564	$2,765,864
Total	$17,399,094	$158,450	$330,314	$521,013	$714,726	$926,748	$1,153,867	$1,407,460	$1,249,823	$1,786,109	$2,140,590	$2,379,560	$2,734,413	$3,122,143	$3,326,135	$3,713,819	$3,841,224	$3,966,298	$4,107,087	$4,273,327	$4,441,188
Avoided Costs (Total Resource)																					
Demand ($/kW)		$55,013	$114,207	$177,020	$244,103	$315,319	$397,744	$481,668	$571,395	$667,247	$769,558	$878,681	$994,987	$1,118,843	$1,250,736	$1,390,975	$1,443,832	$1,486,698	$1,555,648	$1,614,763	$1,676,126
Annual kWh		$103,437	$216,107	$343,192	$468,623	$611,429	$756,123	$925,793	$678,428	$1,118,842	$1,371,052	$1,500,879	$1,739,426	$2,005,300	$2,075,398	$2,322,843	$2,397,592	$2,479,600	$2,551,438	$2,658,564	$2,765,864
Total	$17,399,094	$158,450	$330,314	$521,013	$714,726	$926,748	$1,153,867	$1,407,460	$1,249,823	$1,786,109	$2,140,590	$2,379,560	$2,734,413	$3,122,143	$3,326,135	$3,713,819	$3,841,224	$3,966,298	$4,107,087	$4,273,327	$4,441,188
Avoided Costs (Participant)																					
Electric Demand		$0	$0	$0	$0	$0	$0	$0	$0	$0	$0	$0	$0	$0	$0	$0	$0	$0	$0	$0	$0
Electric		$511,304	$647,090	$1,007,532	$1,396,425	$1,809,866	$2,253,422	$2,729,136	$3,237,535	$3,780,631	$4,360,320	$4,978,622	$5,637,611	$6,339,494	$7,086,379	$7,881,280	$8,188,777	$8,491,646	$8,814,329	$9,149,273	$9,496,946
Total	$36,407,281	$511,304	$647,090	$1,007,532	$1,396,425	$1,809,866	$2,253,422	$2,729,136	$3,237,535	$3,780,631	$4,360,320	$4,978,622	$5,637,611	$6,339,494	$7,086,379	$7,881,280	$8,188,777	$8,491,646	$8,814,329	$9,149,273	$9,496,946
COST CALCULATIONS:																					
Cost Inputs:																					
Program Administration		$1,777,304	$1,844,842	$1,914,946	$1,987,774	$2,063,347	$2,141,650	$2,223,855	$2,307,588	$2,395,194	$2,486,211	$2,580,687	$2,678,753	$2,780,546	$2,884,206	$2,995,682	$3,109,726	$3,227,890	$3,350,955	$3,477,877	$3,610,836
Incentives		$4,500,000	$4,671,008	$4,848,498	$5,032,741	$5,223,985	$5,422,497	$5,628,951	$5,843,436	$6,064,449	$6,294,080	$6,534,104	$6,782,600	$7,048,132	$7,307,656	$7,585,347	$7,873,580	$8,172,707	$8,481,353	$8,805,720	$9,140,337
Participant		$2,912,500	$3,043,955	$3,232,500	$3,043,955	$3,159,605	$3,279,670	$3,404,297	$3,533,660	$3,667,959	$3,807,321	$3,951,999	$4,102,175	$4,258,058	$4,419,864	$4,587,819	$4,762,156	$4,943,118	$5,130,956	$5,325,933	$5,528,318
	NPV																				
Total Participant Costs	$40,013,766	$2,912,500	$3,043,955	$3,159,605	$3,279,670	$3,404,297	$3,533,660	$3,667,959	$3,807,321	$3,951,999	$4,102,175	$4,258,058	$4,419,864	$4,587,819	$4,762,156	$4,943,118	$5,130,956	$5,325,933	$5,528,318	$5,738,394	$5,956,453
Total RIM Costs	$122,060,678	$6,589,009	$7,162,948	$7,770,976	$8,414,879	$9,094,458	$9,817,768	$10,580,726	$11,387,479	$12,240,274	$13,141,457	$14,093,414	$15,098,764	$16,160,171	$17,280,441	$18,463,517	$19,164,093	$19,892,320	$20,648,257	$21,432,870	$22,247,319
Total Utility Costs	$85,653,397	$6,277,304	$6,515,042	$6,763,444	$7,020,453	$7,287,232	$7,564,147	$7,851,584	$8,149,945	$8,459,643	$8,781,109	$9,114,791	$9,461,153	$9,820,677	$10,193,863	$10,581,230	$10,983,366	$11,400,682	$11,833,908	$12,283,997	$12,750,775
Total TRC Costs	$61,001,454	$4,709,804	$4,836,777	$4,947,446	$5,031,649	$5,222,832	$5,421,330	$5,627,570	$5,841,169	$6,063,133	$6,293,532	$6,532,686	$6,780,928	$7,034,604	$7,304,071	$7,583,701	$7,871,882	$8,171,013	$8,481,512	$8,803,859	$9,138,354

TABLE B-4: AVOIDED CAPACITY AND ENERGY COSTS

Avoided Cost Scenario:
Medium Fuel Price Forecast

	2007	2008	2009	2010	2011	2012	2013	2014	2015	2016	2017	2018	2019	2020	2021	2022	2023	2024	2025	2026	2027
Electric Avoided Cost																					
Demand ($/kW)	$142.56	$147.97	$153.60	$159.43	$165.49	$171.78	$178.31	$185.08	$192.12	$199.42	$206.99	$214.86	$223.03	$231.50	$240.30	$249.43	$258.91	$268.75	$278.96	$289.56	$300.56
Average Energy-($/kWh)	$0.06	$0.07	$0.07	$0.07	$0.08	$0.08	$0.08	$0.05	$0.08	$0.08	$0.08	$0.09	$0.09	$0.09	$0.10	$0.10	$0.10	$0.10	$0.11	$0.11	$0.12
Data for Medium Fuel Price Forecast:																					
Demand ($/kW)	$142.56	$147.97	$153.60	$159.43	$165.49	$171.78	$178.31	$185.08	$192.12	$199.42	$206.99	$214.86	$223.03	$231.50	$240.30	$249.43	$258.91	$268.75	$278.96	$289.56	$300.56
Average Energy-($/kWh)	$0.064	$0.066	$0.070	$0.072	$0.075	$0.077	$0.081	$0.052	$0.076	$0.084	$0.084	$0.089	$0.095	$0.091	$0.095	$0.098	$0.100	$0.104	$0.109	$0.113	$0.118
Data for High Fuel Price Forecast:																					
Demand ($/kW)	$142.56	$147.97	$153.60	$159.43	$165.49	$171.78	$178.31	$185.08	$192.12	$199.42	$206.99	$214.86	$223.03	$231.50	$240.30	$249.43	$258.91	$268.75	$278.96	$289.56	$300.56
Average Energy-($/kWh)	$0.076	$0.079	$0.083	$0.084	$0.089	$0.092	$0.096	$0.051	$0.088	$0.098	$0.095	$0.101	$0.110	$0.104	$0.109	$0.113	$0.114	$0.119	$0.125	$0.130	$0.135

WESTPRO HOLDINGS, LLC

75-143 Hualalai Road, Suite 202
Kailua-Kona, Hawaii 96740
(808) 326-4675 Fax (808) 329-3779
reception@westprodev.com

August 29, 2006

Mr. Warren H.W. Lee, President
Hawaii Electric Light Company, Inc.
P.O. Box 1027
Hilo, HI 96721-1027

Dear Warren,

It was a pleasure meeting with you again at the Westpro Development's Lokahi Makai Housing Project on June 27, 2006. Our joint efforts at providing solar water heating systems to all units at Lokahi Makai have been a great success, and we are proud to say that Lokahi Makai is the Big Island's first ENERGY STAR® housing development. We look forward to a continued working relationship with HELCO in this regard.

Your ideas regarding the development of a Renewable Energy and Energy Efficiency Program for Affordable Housing (REEEPAH) were quite interesting and we would like to know how we may be able to take full advantage of this opportunity to support our ongoing and proposed affordable housing projects. As you know, Mayor Harry Kim has been urging the business community, including Westpro Development, to step forward aggressively and assist the County of Hawaii to address the serious problem of affordable housing scarcity on the Big Island. I share the Mayor's concern, as does HELCO and many others in the business community. This initiative must succeed, lest the local economy falter because the workforce is unable to find affordable housing and remain here on the island.

We have started construction and concluded the lottery under OHCD guidelines for our Seascape Condominium project. This project consists of 108 2 bedroom, 2 bath Energy Star condominiums with individual solar hot water heaters. We estimate that electric bills will be cut by $75 to $100 a month.

As you know, electrical rates have risen over 30% to the consumer in the past year. It is essential for all affordable housing products to have solar hot water and photo voltaic panels when economically practical.

Since our meeting I have been very busy. I have had telephone conversations with your Energy Services Department staff to develop some concepts that may help to bring down the costs of construction and make the units less costly to operate. A buy-down of centralized solar water heating systems or other energy efficiency measures can and will be passed along to the prospective

homeowners and enhance the affordability of the housing units. The energy cost savings made possible by the incorporation of these energy efficiency measures are not only a benefit to the homeowners, but also helps to firm up our sources of financial support thereby enhancing the viability of the project.

Recently I was called to a high level staff meeting by Mayor Kim. At that time I proposed a 100 unit 4 bedroom new concept modular apartment complex that will house 400 transient workers for the Kona / Kohala Coast resort workers.

This is a critical program as it is estimated that over 1100 employees are needed in the resorts and several more at Costco, Safeway, Wal-Mart, K-Mart, Lowe's and Home Depot. We must provide low cost housing and rental properties now with lower energy cost or risk losing the designation of being the premier resort destination that Hawaii is known throughout the world as being.

I understand that HELCO's ability to offer these options to the affordable housing industry is contingent on its success in obtaining the approval of the Hawaii Public Utilities Commission for REEEPAH. Westpro Development is fully supportive of your efforts; therefore if there is any way in which I may assist you in this regard please don't hesitate to ask.

Sincerely,

John R. Stevens, Chairman
Westpro Holdings, LLC

cc: Hon. Harry Kim, Mayor, County of Hawaii

CA-IR-268

Ref: HELCO Responses to CA-IR-2, T-8, Attachment A, CA-IR-105 and HELCO-WP-803, pages 15-46.

Please provide the following information regarding the $434,200 "TY 2006 Estimate" charges from HECO (Expense Element 550):

a. Information required to reconcile the amounts shown on each page of WP-803 with the $434,200 amount.
b. Project, program and work order documentation supporting the work being done for HELCO.
c. Explain the process used by HECO to estimate the charges under each project, program and work order.
d. Provide the actual 2006 to-date charges to HELCO by project, program and work order.
e. Explain how/if the $434,200 amount is further adjusted in determining the Company's asserted revenue requirement.

HELCO Response:

a. See pages 3 to 5 of this response.

b. Expense Element 550 is used for intercompany billing of services provided by HECO, in the case of the $434,200, for services provided to support HELCO's Integrated Resource Planning process. The supporting project, program, and work order information is developed at the HECO department/division level. See response to part a, which shows the breakdown of the $434,200 by HECO departments/divisions. See the "Total Year 2006" amounts on the various Intercompany Service Forms in WP-803 and the supporting work papers included in WP-803 for the estimated cost for each HECO department/division. HELCO is currently in the process of developing its third Integrated Resource Plan and associated 5-year action plan to be filed by December 29, 2006 in Docket No. 04-0046. For an example of the nature of this effort, please see HELCO's previous Integrated Resource Plan filed on September 1, 1998 in Docket No. 97-0349.

c. In general, the process used to estimate the cost for HECO departments/divisions providing IRP-related services to HELCO involves HELCO identifying a need for assistance from HECO and sending the Intercompany Services Form to the individual HECO department/division. Cost estimates are developed by the responsible personnel within each HECO department/division who will perform the work based on work assignments defined by the HECO IRP Department. The HECO personnel use their judgement to estimate labor hours and non-labor expenses that will be required to complete the assignment, based on accumulated experience with IRP planning work that has been done over the years for all three companies HECO, HELCO, and MECO. The HECO departments/divisions complete the Intercompany Services Form including the estimated cost for the services to be provided. The Intercompany Services Form is returned to HELCO for their review and approval. Once approved, the estimated cost as shown in WP-803 are included in HELCO's budgets.

d. See page 6 of this response.

e. The $434,200 was not further adjusted in determining the Company's asserted revenue requirement.

HAWAII ELECTRIC LIGHT COMPANY
IRP HECO CHARGES

*Project #	*RA #	*Act #	*Loc #	*Ind #	*EE #	Line item	TY 2006 Estimate	Reference	Reference Amount	
H0000004	HEB	711	HEL	NE	550	IRP-Corporate Communications	3,708	See pages 4 & 5, line 32 + line 38	4,302	Note 1
H0000004	HEB	711	HEL	NE	550	IRP-Energy Projects	8,412	See page 4, line 8	8,405	Note 1
H0000004	HEB	711	HEL	NE	550	IRP-Environmental Department	2,400	WP-803, page 30-31	2,400	
H0000004	HEB	711	HEL	NE	550	IRP-Energy Services-IRP general plng	76,884	WP-803, page 37-46	76,877	
H0000004	HEB	711	HEL	NE	550	IRP-HECO IRP Division	191,760	WP-803, page 15-19	191,751	Note 2
H0000004	HEB	711	HEL	NE	550	IRP-ITS support for IRP web page	2,004	See page 4, line 2	2,000	Note 1
H0000004	HEB	711	HEL	NE	550	IRP-Power Supply Engineering	8,304	WP-803, page 22-24	8,300	
H0000004	HEB	711	HEL	NE	550	IRP-Power Supply Svcs/Generation Plng	85,008	WP-803, page 25-26	85,008	
H0000004	HEB	711	HEL	NE	550	IRP-Power Supply Svcs/Transmission Plng	24,624	WP-803, page 28-29	24,628	
H0000004	HEB	711	HEL	NE	550	IRP-Regulatory Affairs	7,200	WP-803, page 20-21	7,200	
H0000004	HEB	711	HEL	NE	550	IRP-Technology Division	23,916	WP-803, page 27	23,907	
							434,220		434,778	

Note 1: Pages 4 - 12 are 2005 estimates. 2005 estimates were used when no intercompany service form was received.
Note 2: WP-803 pages 15-19 are duplicates of pages 32-36

Line No.	Line Item	RA	Act	Loc	Ind	Proj	EE	LbrClass	FY05	Notes
1	HEL billable Dev Sup for HELCO IRP Web page	PED	711	HEL	BE	NPEZZZZZ	451		2000	
2		PED	711	HEL	BE				2000	
3	HCA IRP-related labor & non-labor - Manager	PNG	711	HEL	BE	NPASVP7Z	150	__E	6312	8/14/03 added activity code 711 (Rick's time) 150 hours total in HELCO IRP for 2004 & 2005
4		PNG	711	HEL	BE	NPASVP7Z	406	__E	343.2	
5		PNG	711	HEL	BE	NPASVP7Z	421	__E	458.4	
6		PNG	711	HEL	BE	NPASVP7Z	422	__E	762	
7		PNG	711	HEL	BE	NPASVP7Z	423	__E	529.58	
8		PNG	711	HEL	BE			__E	8405.18	
9	HCB H0000004 IRPHELCOsupplies	PNP	711	HEL	BE	NPNPZZZZ	205		400	Materials and supplies to provide assistance on IRP development and implementation filings with PUC. PNP. Patsy Nanbu.
10		PNP	711	HEL	BE				400	
11	HCB H0000004 Analyst IRP HEL	PNP	711	HEL	BE	NPNPZZZZ	150	__TC	4232.46	Provide regulatory assistance on matters related to IRP development and implementation. PNP. Patsy Nanbu.
12		PNP	711	HEL	BE	NPNPZZZZ	406	__TC	394.68	
13		PNP	711	HEL	BE	NPNPZZZZ	421	__TC	527.16	
14		PNP	711	HEL	BE	NPNPZZZZ	422	__TC	876.3	
15		PNP	711	HEL	BE	NPNPZZZZ	423	__TC	355.1	
16		PNP	711	HEL	BE			__TC	6385.7	
17	HELCO IRP	PNR	711	HEL	BE	NPASVP7Z	501		2300	
18		PNR	711	HEL	BE				2300	
19	HAA Sandy Satake - IRP planning	PNR	711	HEL	BE	NPASVP7Z	150	__FS	1990.5	IRP planning. PNR. Art Seki.
20		PNR	711	HEL	BE	NPASVP7Z	406	__FS	143	
21		PNR	711	HEL	BE	NPASVP7Z	421	__FS	191	
22		PNR	711	HEL	BE	NPASVP7Z	422	__FS	317.5	
23		PNR	711	HEL	BE	NPASVP7Z	423	__FS	167	
24		PNR	711	HEL	BE			__FS	2809	
25	HAA Sandy Satake - IRP planning	PNR	711	HEL	BE	NPASVP7Z	150	Y_IRP	1882	IRP planning. PNR. Art Seki.
26		PNR	711	HEL	BE	NPASVP7Z	406	Y_IRP	143	
27		PNR	711	HEL	BE	NPASVP7Z	421	Y_IRP	191	
28		PNR	711	HEL	BE	NPASVP7Z	422	Y_IRP	317.5	
29		PNR	711	HEL	BE	NPASVP7Z	423	Y_IRP	157.9	
30		PNR	711	HEL	BE			Y_IRP	2691.4	
31	HCB H0000004 HELCO IRP	POC	711	HEL	BD	NPOCZZZZ	522		600	IRP Non-LABOR. POC. LYNNE UNEMORI
32		POC	711	HEL	BD				600	
33	HCB H0000004 HELCO IRP	POC	711	HEL	BE	NPOCZZZZ	150	__TC	2453.6	IRP LABOR. POC. LYNNE UNEMORI

Line No.	Line Item	RA	Act	Loc	Ind	Proj	EE	LbrClass	FY05	Notes
34		PQC	711	HEL	BE	NPQCZZZZ	406	_TC	228.8	
35		PQC	711	HEL	BE	NPQCZZZZ	421	_TC	305.6	
36		PQC	711	HEL	BE	NPQCZZZZ	422	_TC	508	
37		PQC	711	HEL	BE	NPQCZZZZ	423	_TC	205.86	
38		PQC	711	HEL	BE			_TC	3701.86	
39	HCI SSATAK04 HELCO IRP BILLABLE	PSD	711	HEL	BE	NPSZZZZZ	522		0	HELCO IRP interisland travel expenses to attend DSM advisory group meetings.PSD.Elaine Wong.
40		PSD	711	HEL	BE				0	
41	HCI SSATAK04 HELCO IRP BILLABLE	PSD	711	HEL	BE	NPSZZZZZ	150	_FS	0	HELCO IRP labor by Norris Creveston.PSD.Elaine Wong.
42		PSD	711	HEL	BE	NPSZZZZZ	406	_FS	0	
43		PSD	711	HEL	BE	NPSZZZZZ	421	_FS	0	
44		PSD	711	HEL	BE	NPSZZZZZ	422	_FS	0	
45		PSD	711	HEL	BE	NPSZZZZZ	423	_FS	0	
46		PSD	711	HEL	BE			_FS	0	
47	HCI SSATAK04 - HELCO IRP BILLABLE	PSD	711	HEL	BE	NPSZZZZZ	150	_TC	0	HELCO IRP PSD labor by analysts.PSD.Elaine Wong.
48		PSD	711	HEL	BE	NPSZZZZZ	406	_TC	0	
49		PSD	711	HEL	BE	NPSZZZZZ	421	_TC	0	
50		PSD	711	HEL	BE	NPSZZZZZ	422	_TC	0	
51		PSD	711	HEL	BE	NPSZZZZZ	423	_TC	0	
52		PSD	711	HEL	BE			_TC	0	
53	HCI SSATAK04: HELCO IRP BILLABLE SUPPORT	PSF	711	HEL	BE	NPSZZZZZ	205		0	
54	HELCO IRP SALES FORECAST BILLABLE: PSF Division is provider of service. HECO contact: Alan Hee 543-4788.									
55										
56	HCI SSATAK04: HELCO IRP BILLABLE SUPPORT	PSF	711	HEL	BE	NPSZZZZZ	501		1550	HELCO IRP SALES FORECAST BILLABLE: PSF Division is provider of service. HECO contact: Alan Hee 543-4788.
57	HCI SSATAK04: HELCO IRP BILLABLE SUPPORT	PSF	711	HEL	BE	NPSZZZZZ	520		0	HELCO SALES FORECAST IRP BILLABLE SUPPORT: PSF Division is provider of service. HECO contact: Alan Hee 543-4788.
58	HCI SSATAK04: HELCO IRP BILLABLE SUPPORRT	PSF	711	HEL	BE	NPSZZZZZ	501		16679	HELCO IRP SALES FORECAST BILLABLE: PSF Division is provider of service. HECO contact: Alan Hee 543-4788.
59										
60	Consultants include UHERO	misc.*								

HAWAII ELECTRIC LIGHT COMPANY, INC.
IRP HECO CHARGES

*Project #	*RA #	*Act #	*Loc #	*Ind #	*EE #	Line item	TY 2006 Estimate	HELCO Workorder No.	2006 YTD August
H0000004	HEB	711	HEL	NE	550	IRP-Corporate Communications	3,708	CS000667	0.00
H0000004	HEB	711	HEL	NE	550	IRP-Energy Projects	8,412		
H0000004	HEB	711	HEL	NE	550	IRP-Environmental Department	2,400		
H0000004	HEB	711	HEL	NE	550	IRP-Energy Services-IRP general plng	76,884	CS000668	20,470.83
H0000004	HEB	711	HEL	NE	550	IRP-HECO IRP Division	191,760	CS000672	99,679.88
H0000004	HEB	711	HEL	NE	550	IRP-ITS support for IRP web page	2,004	CS000673	
H0000004	HEB	711	HEL	NE	550	IRP-Forecasts & Research Division		CS000948	7,773.33
H0000004	HEB	711	HEL	NE	550	IRP-Power Supply Engineering	8,304	CS000670	979.62
H0000004	HEB	711	HEL	NE	550	IRP-Power Supply Services Dept		CS000719	174,905.73
H0000004	HEB	711	HEL	NE	550	IRP-Power Supply Svcs/Generation Plng	85,008		
H0000004	HEB	711	HEL	NE	550	IRP-Power Supply Svcs/Transmission Plng	24,624		
H0000004	HEB	711	HEL	NE	550	IRP-Regulatory Affairs	7,200	CS000669	1,338.94
H0000004	HEB	711	HEL	NE	550	IRP-Technology Division	23,916	CS000731	1,476.24
H0000004	HEB	711	HEL	NE	550	Journal Entry		none	55.92
H0000004	HEB	711	HEL	NE	550	Comm Relations/Public relations		CS000671	8,305.09
						Total	434,220		314,985.58

CA-IR-269

Ref: T-9, page 42, HELCO-909 & response to CA-IR-110 (Other Public Claims).

With reference to HELCO-909, CA-IR-110(a) requested documentation showing a historical breakdown of claims payment and accrual history. In response, however, the Company referred to HELCO-909, page 3. CA-IR-110 was prepared with full knowledge of the summary information set forth on HELCO-909, including page 3. The purpose of CA-IR-110(a) was to obtain detailed information regarding individual claim payments and documentation associated with determining reserve accruals. Please provide the following:

a. Does HELCO possess detailed information to support the individual transactions comprising the annual claims paid that are summarized on HELCO-909, page 3?
   1. If so, please provide such information.
   2. If not, please explain why such supporting detail is not available.

b. Does HELCO possess detailed information to support the individual transactions or elements comprising the annual reserve accruals that are summarized on HELCO-909, page 3?
   1. If so, please provide such information.
   2. If not, please explain why such supporting detail is not available.

HELCO Response:

a. The historical breakdown of customer claim payments is attached on pages 3 - 7.

The historical breakdown of public claim payments is attached on pages 10 - 14.

The historical breakdown of oil spill costs is attached on pages 15 – 17.

HELCO has detailed information to support the individual transactions comprising the annual claims paid as shown on pages 3 – 7 and 10 - 14 of this CA-IR response and that are summarized on HELCO-909, page 3. For example, the detailed information to support the $119.15 payment for the last customer claim for 2005 listed on page 7 is attached on pages 8 - 9. Since each claim involves similar documentation, producing all of the detailed information supporting the individual transactions (500 + pages of documents) would be unduly burdensome. In accordance with the Stipulated Prehearing Order that has been submitted to the PUC, HELCO will make the documents available for inspection at its office in Hilo. In addition, HELCO will provide the detailed information supporting

specific individual transactions requested by the Consumer Advocate to the extent practicable, such that the request is not unduly burdensome.

b. The detailed information for monthly transactions to the reserve accruals is attached on page 18. Documentation supporting the monthly reserve accruals is confidential and will be provided, if requested, pursuant to Protective Order No. 22593, dated June 30, 2006.

Hawaii Electric Light Company
Customer Claims
2001

Claim No.	Amount Paid	Claim No.	Amount Paid	
2000-191	$100.00	2001-029	$114.58	
2000-060	$100.00	2001-076	$270.40	
99-107	$75.00	2001-028	$20.77	
2000-113	$60.00	2001-085	$665.27	
2000-157	$140.00	2001-048	$152.70	
Payout adj	$4,394.55	2001-043	$100.00	
2001-060	$969.00	2001-071	$72.36	
2001-060	$67.60	2001-045	$20.00	
2000-007	$390.62	2000-202	$497.00	
2001-060	$406.25	2001-016	$823.00	
2000-133	$288.00	2001-027	$57.00	
2001-012	$38.00	Claim # NA	$1,057.79	
2000-196	$163.37	Claim # NA	$82.29	
N0464-97D	$188.00	2001-051	$78.00	
2001-075	$250.33	2001-035	$108.30	
2001-059	$176.31	Claim # NA	$753.75	
2001-031	$1,089.03	2001-084	$360.00	
2001-016	$67.60	2001-114	$1,250.70	
2001-068	$68.65	2001-042	$135.20	
2001-040	$170.00	2001-030	$75.00	
2001-027	$33.32	2001-034	$192.40	
2001-025	$38.00	2001-076	$2,130.53	
2001-023	$573.00	2001-050	$431.09	
2001-044	$50.00	2001-088	$965.53	
2001-024	$96.87	2001-091	$1,109.34	
2001-021	$231.00	2001-084	$807.00	
2001-019	$477.50	2001-138	$925.17	
2001-026	$43.09	2001-124	$133.00	
2001-022	$551.00	2001-139	$332.79	
2001-020	$105.00	2001-049	$72.87	
2001-041	$21.85	2001-033	$644.77	
2001-038	$66.25	Claim # NA	$364.58	
		HELCO Labor	$33,825.00	
	$11,489.19		**$48,628.18**	**$60,117.37**

Hawaii Electric Light Company
Customer Claims
2002

Claim No.	Amount Paid	Claim No.	Amount Paid	
99-158	$35.00	2002-134	$734.00	
99-158	$700.00	2002-134	$633.00	
2000-130	$363.18	2000-099	$160.00	
2002-005	$342.91	2002-046	$52.00	
2001-166	$977.29	2002-104	$264.23	
2001-142	$684.96	2002-092	$48.00	
2001-186	$453.33	2002-105	$857.51	
2001-062	$405.86	2001-134	$583.28	
2002-011	$129.56	2002-088	$104.00	
2002-084	$104.00	2001-134	$416.00	
2002-018	$135.42	2002-046	$367.79	
2002-046	$87.92	2002-085	$440.33	
2002-116	$84.90	2002-114	$326.94	
2002-016	$250.00	2000-098	$144.64	
2002-084	$53.82	2002-121	$435.23	
2002-100	$738.13	2002-126	$351.03	
2002-106	$793.96	2002-124	$525.00	
		HELCO Labor	$32,629.00	
	$6,340.24		**$39,071.98**	**$45,412.22**

Hawaii Electric Light Company
Customer Claims
2003

Claim No.	Amount Paid	Claim No.	Amount Paid
2002-155	$201.90	2003-068	$581.00
2002-153	$400.00	2003-105	$629.86
2002-114	$109.98	2003-065	$711.55
2002-171	$378.15	2003-109	$162.00
2001-170	$104.00	2003-106	$420.68
2002-089	$140.00	2003-107	$366.00
2002-106A	$1,402.64	2003-109	$130.00
2002-207	$380.80	2003-105	$874.13
2002-210	$367.45	2003-104	$3,659.92
2002-209	$310.00	2003-108	$150.80
2002-136	$202.00	2003-107	$212.45
2002-129	$1,306.97	2003-104	$346.32
2002-089	$104.00	2003-108	$435.00
2002-176	$156.28	2003-031	$60.79
2002-199	$563.00	2003-126	$169.47
2002-173	$139.00	2003-128	$1,008.95
Claim # NA	$58.85	2003-087	$748.85
2002-208	$79.10	2003-132	$273.44
2002-117	$962.60	2003-137	$1,652.03
2002-120	$2,721.04	2003-081	$710.38
2002-144	$31.25	2003-077	$74.00
2002-206	$3,000.00	2003-142	$572.16
2003-033	$933.17	2003-135	$971.08
2003-063	$395.83	2003-139	$1,152.79
2003-038	$976.65	2003-112	$578.29
2002-157	$598.28	2003-111	$1,112.75
2003-034	$105.00	2003-110	$348.68
2003-109	$7,797.11		
		HELCO Labor	$26,300.00
	$23,925.05		**$44,413.37**

$68,338.42

Hawaii Electric Light Company
Customer Claims
2004

Claim No.	Amount Paid	Claim No.	Amount Paid	
2003-084	$145.00	2004-062	$46.53	
2003-136	$1,467.10	2004-057	$1,510.18	
2003-090	$1,262.09	2003-124	$232.00	
2003-141	$2,523.01	2004-080	$57.28	
2004-012	$580.71	2004-009	$98.95	
2002-219	$28.64	2004-005	$1,654.74	
2003-140	351.06	2004-077	$1,844.07	
2003-116	$482.27	2004-009	$919.31	
2003-113	$300.00	2004-091	$30.00	
2004-009	$500.00	2004-092	$417.96	
2004-059	$643.95	2004-069	$954.82	
2004-058	$751.28	Claim # NA	$1,805.65	
2003-140, 2003-136, 2003-141, 2004-XXX**	$770.84	2004-129	$220.00	
2004-009	$302.08	2004-096	$6,052.68	
2004-027	$423.24	2004-109	$75.29	
2004-066	$666.95	2004-160	$200.00	
2003-156	$567.99	2004-159	$236.00	
2003-066	$78.00	2004-136	$72.90	
2004-054	$350.01	2004-151	$180.00	
2003-086	$347.00	2004-145	$321.61	
2004-066	$176.04	2003-116	$535.34	
2003-164	$196.38	2004-132	$107.40	
2004-009	$169.27	2004-134	$45.00	
2003-167	$559.96	2004-146	$60.00	
2004-065	$135.31	2004-169	$149.21	
2003-156	$99.26	2004-165	$379.72	
2003-156	$67.71	2004-069	$199.17	
2004-062	$307.47			
		HELCO Labor	$22,200.00	
	$14,252.62		**$40,605.81**	**$54,858.43**

** Claim # Not Available

Hawaii Electric Light Company
Customer Claims
2005

Claim No.	Amount Paid	Claim No.	Amount Paid
2005-014	$603.55	2005-026	$870.30
2004-172	$184.00	2004-194	$472.48
2004-194	$595.00	2005-021	$200.00
2004-086	$1,274.89	2005-032	$16,502.56
2004-173	$121.68	2005-029	$174.00
2004-157	$263.13	2005-053	$700.00
Stamps for return envelope	$29.60	2004-077	$730.16
2005-020	$70.33	2004-130	$982.55
2005-017	$480.58	2005-052	$438.45
2005-017	$943.18	2003-085	$221.45
2005-015, 2005-016 & 2005-018	$225.81	2005-056	$142.19
2004-190	$5,000.00	2005-078	$449.74
2004-195	$124.80	2005-061	$348.69
2005-005	$30.00	2005-032	$838.98
2005-003	$131.25	2005-064	$237.78
2005-015	$136.00	2005-077	$275.00
2005-016	$1,088.00	2005-078	$942.90
2005-018	$208.76	2005-078	$151.81
2004-125	$555.20	2005-078	$238.45
2004-123	$181.24	2005-078	$36.46
2005-023	$358.81	2005-032 & 2005-114	$302.84
2004-105	$695.00	2005-110 & 2005-119	$459.10
2004-138	$1,978.69	2005-115	$79.56
2004-153	$911.87	2005-099	$182.67
2004-114	$836.15	2005-119	$169.01
2004-137	$2,390.34	2005-134	$16.68
2005-017	$36.46	2005-097	$103.55
2004-194	$2,479.17	2005-078	$240.53
2005-022	$131.77	2005-078	$1,958.06
2005-022	$770.46	2005-085	$119.15
2003-079	$1,619.28		
		HELCO Labor	$7,800.00
	$24,455.00	**$36,385.10**	**$60,840.10**

HAWAII ELECTRIC LIGHT CO., INC.

DATE	CHECK NO.
12/08/05	350584
HELC	024028

The attached Check is in Payment of the following Invoice(s):

Date	Invoice/Credit Memo	Type	Description	Gross	Discount	Net
12/01/05	12012005 CLAIM 2005-085 Invoice No. 22712			119.15		119.15
			TOTAL	119.15	0.00	119.15

REMOVE DOCUMENT ALONG THIS PERFORATION

HAWAII ELECTRIC LIGHT CO., INC.

Bank of Hawaii
Honolulu, Hawaii
39-102
1213

CHECK NO.
350584

PAY ONE HUNDRED NINETEEN DOLLARS AND 15 CENTS

TO THE ORDER OF

HATADA'S TV, INC.
334 KILAUEA AVE.
HILO HI 96720

DATE
12/08/05

CHECK AMOUNT
**********119.15

⑈350584⑈ ⑆121301028⑆ 0081⑈032718⑈

HATADA'S TV, INC.

334 KILAUEA AVE.
HILO, HAWAII
Phone 935-1457

22712

DATE OF ORDER: 11-29-05

NAME: HELCO
PHONE: 969 0279
ADDRESS: FOR RODNEY KINOSHITA
APT.:
ORDER NO.: BEV
CITY:
DATE COMPLETED:

MAKE AND TYPE: SONY 32" TV
MODEL: KV 32S12
SERIAL NO.: 7046448
☐ C.O.D. ☐ CHARGE
REPAIR IN: ☐ HOME ☐ SHOP

☐ RADIO ☐ RECORD PLAYER ☐ COMBO ☐ FREEZER ☐ REFRIG. ☐ RANGE ☐ AIR COND.
☑ TV ☐ ANT. ☐ WASHER ☐ DRYER ☐ IRONER ☐ HEATER ☐ DISPOSAL. OTHER _____

☐ SERVICE
☐ INSTALL
☐ PICK UP
☐ DELIVER

NATURE OF SERVICE REQUEST: POWER

QUANTITY	PART NO.	DESCRIPTION	PRICE	AMOUNT	
2	REGULATOR	XSISTORS	12.00	24	00
1	FUSE	RESISTOR		5	57
1	HORIZ.	OUTPUT XSISTOR		15	00

SERVICE PERFORMED:

PARTS	44	57
LABOR	70	00
SERVICE CHARGE		
TAX	4	58
TOTAL	119	15

A finance charge computed by a single periodic rate of 1%, which is an annual percentage rate of 12%, will be imposed and will be applied to your previous balance after deducting current payments and/or credit appearing on the face of your monthly statement. In the event my account becomes delinquent and is placed in the hands of a licensed collector or an attorney for collection, or suit is instituted on this account, I agree to pay, in addition to the amount of the delinquent account and interest, a collector's or attorney's fee equal to 33-1/3% of said delinquent account.

I hereby accept above performed service as being satisfactory and acknowledge that equipment has been left in good condition.

Technician: A. Hatada
Customer's Signature: [signature]

GUARANTEE: We are pleased to guarantee all parts installed by us against normal service failure for a period of 90 days.

PLEASE NOTE: *The above charges cover this specific repair job only. Our guarantee does not, of course, apply to any portion of your equipment on which we have not performed service at this time. If new repairs become necessary in the future, they will be subject to our regular rates.*

TERMS: NET CASH Upon Completion of Work

2005-085

Amount Paid	Matter
$144.00	Information Not Available
$590.00	Vehicle damage
$934.43	Vehicle damage
$588.54	Vehicle damage
$374.16	Vehicle damage
$4,345.00	Vehicle damage
$2,373.70	Vehicle damage
$121.02	Vehicle damage
$226.35	Vehicle damage
$887.80	Legal fees
$653.57	Legal fees
$2,815.92	Legal fees
$285.28	Legal fees
$238.34	Legal fees
$221.35	Legal fees
$93.18	Legal fees
$312.50	Legal fees
$119.53	Legal fees
$23,861.94	Other - Procard Purchases, Xerox Lease, HELCO Labor, etc.
$39,186.61	

Amount Paid	Matter
$225.00	Vehicle damage
$184.38	Vehicle damage
$500.00	Property damage
$3,629.41	Vehicle damage
$863.13	Vehicle damage
$239.58	Vehicle damage
$3,090.00	Vehicle damage
$1,259.32	Property damage
$4,584.34	Property damage
$883.50	Vehicle damage
$1,696.05	Vehicle damage
$135.42	Pole repair, traffic control
$156.25	Vehicle damage
$159.13	Vehicle damage
$2,954.72	Vehicle damage
$3,140.60	Vehicle damage
$4,158.48 *	Legal fees
$1,251.12 *	Legal fees
$523.68	Legal fees
$1,126.88 *	Legal fees
$722.40	Legal fees
$330.09	Legal fees
$261.73	Legal fees
$992.53	Legal fees
$67.18	Legal fees
$364.58	Legal fees
$1,111.87	Legal fees
$837.63	Legal fees
-$1,999.56	Other - Procard Purchases, Xerox Lease, HELCO Labor, etc.
$33,449.44	

** This amount for "Other" should be $4,023 and not -$1,999;
The total for "Public Claims" should be $39,471 and not $33,449.

Amount Paid	Matter
$597.39	Vehicle damage
$796.77	Bodily injury
$197.92	Vehicle damage
$4,607.73	Vehicle damage
$233.59	Pole repair, traffic control
$1,466.02	Vehicle damage
$1,448.66	Vehicle damage
$100.00	Vehicle damage
$712.50	Vehicle damage
$5,127.38	Vehicle damage
$423.14	Vehicle damage
$300.01	Vehicle damage
$1,049.73	Vehicle damage
$958.55	Vehicle damage
$1,106.93	Vehicle damage
$3,088.13	Vehicle damage
$1,484.85	Vehicle damage
$389.69	Vehicle damage
$943.44	Vehicle damage
$78.13	Legal fees
$13.02 *	Legal fees
$130.21	Legal fees
$86.29	Legal fees
$130.21	Legal fees
$182.29 *	Legal fees
$26.04	Legal fees
$1,288.55	Legal fees
$1,577.24	Legal fees
$247.40 *	Legal fees
$666.76	Legal fees
$967.10	Legal fees
$1,270.87 *	Legal fees
$841.92	Legal fees
$26.04	Legal fees
$39.06	Legal fees
$1,379.24 *	Legal fees
$99.26	Legal fees
$56.88	Legal fees
$156.77	Legal fees
$1,467.17	Legal fees
-$25,500.00 **	Other - Procard Purchases, Xerox Lease, HELCO Labor, etc.
$10,262.88	

** This amount for "Other" should be $7,847 and not -$25,500;
The total for "Public Claims" should be $43,970 and not $10,263.

Amount Paid	Matter
$108.10	Vehicle damage
$7,515.50	Vehicle damage
$236.98	Pole repair, traffic control
$4,661.39	Vehicle damage
$3,710.73	Vehicle damage
$2,200.00	Property damage
$1,228.85	Property damage
$4,688.07	Property damage
$1,459.04	Vehicle damage
$594.51	Vehicle damage
$200.79	Property damage
$350.00	Property damage
$619.79	Property damage
$175.31	Property damage
-$24,283.78 **	Pepeekeo incident
$531.80	Legal fees
$13,949.90 *	Legal fees
$704.58 *	Legal fees
$1,555.69	Legal fees
$1,029.17	Legal fees
$945.38	Legal fees
$130.21	Legal fees
$436.98	Legal fees
$93.23	Legal fees
$926.58	Legal fees
$120.94	Legal fees
$464.71	Legal fees
$2,479.59	Legal fees
$209.95	Legal fees
$237.83	Legal fees
$1,995.11	Legal fees
$8,007.23	Legal fees
$351.32	Legal fees
$234.38	Legal fees
$4,511.07	Legal fees
$1,136.06	Legal fees
$53.58	Legal fees
$1,213.70	Legal fees
$3,738.17	Legal fees
$309.90	Legal fees
$2,515.13	Legal fees
$201.97	Legal fees
$3,397.18	Legal fees
$647.10	Legal fees
$812.94	Legal fees
$14,500.00	Other - Procard Purchases, Xerox Lease, HELCO Labor, etc.
$70,906.66	

** Reimbursement from insurance for legal fees from a specific public claim case. The original charges of $24,283.78 are identified by the dollar amounts noted on page 11 - 13 with an "**". Sum of all items noted with an "**" = $24,283.78.

Amount Paid	Matter
-$962.09 **	Vehicle damage
-$191.97 **	Vehicle damage
$613.17	Vehicle damage
$1,419.39	Vehicle damage
$1,318.08	Vehicle damage
$1,106.21	Vehicle damage
$2,184.00	Property damage
$125,000.00	Public claim
$6,000.00	Public claim
$1,518.50	Legal fees
$1,467.54	Legal fees
$13.02	Legal fees
$1,902.52	Legal fees
$271.67	Legal fees
$13.02	Legal fees
$26.04	Legal fees
$26.04	Legal fees
$4,244.98	Legal fees
$81.80	Legal fees
$442.33	Legal fees
$207.29	Legal fees
$416.35	Legal fees
$54.17	Legal fees
$86.36	Legal fees
$1,797.68	Legal fees
$39.58	Legal fees
$304.38	Legal fees
$20.31	Legal fees
$413.72	Legal fees
$234.00	Legal fees
$52.60	Legal fees
$26.04	Legal fees
$475.50	Legal fees
$65.63	Legal fees
$106.20	Legal fees
$55.89	Legal fees
$169.27	Legal fees
$169.27	Legal fees
$31,100.00 Various	Other - Procard Purchases, Xerox Lease, HELCO Labor, etc.
$182,288.49	

** These two credits were recorded to the wrong account; should have been charged to the vehicle clearing account; the balance for 2005 should be $183,442.56 vs $182,288.49.

HELCO
HELCO Production Oil Spill Claims
2001 - 2005
($ in 000's)

2004		2005		Total	
668.2	NOA Oil Spill	* (236.9)	NOA Oil Spill	431.3	See Page 16 for Details
501.5	Hualani Oil Spill	29.8	Hualani Oil Spill	531.3	See Page 17 for Details
1,169.7		(207.1)		962.6	

* Credit in 2005 is due to receipt from Chevron for 50% of the oil spill costs, offest by additional costs incurred in 2005.

Hawaii Electric Light Company, Inc.
NOA Oil Spill Pier 3

		HELCO Actuals	Chevron Actuals	Total
Clean up Costs	Clean Isle Council	299,331.17		299,331.17
	MSRC		86,880.65	86,880.65
	C&H Ishii	32,708.43		32,708.43
	HELCO internal labor	33,063.00		33,063.00
	Material	21,468.00		21,468.00
	J& AL Pumping	1,171.83		1,171.83
	Kirk Tomita HECO	5,768.99		5,768.99
	Puna Rentals	1,156.75		1,156.75
	Aloha Machine & Welding	6,100.00		6,100.00
	Aloha Machine & Welding	627.34		627.34
	Aloha Security	5,382.00		5,382.00
	Hawthorne Pacific	1,214.05		1,214.05
	Wire Products	208.33	225.00	433.33
	Business Services Hawaii	465.00		465.00
	Allied Machinery	619.27		619.27
	Tinker Engineering	15,685.00		15,685.00
	Kagami Inc.	13,682.39		13,682.39
	Airborne Express		8.86	8.86
	Coast Guard Fine		3,000.00	3,000.00
	HKPO Procard - KFC Meal		252.69	252.69
	Air travel		758.02	758.02
	Meals		41.88	41.88
	HPM Building Supply		135.09	135.09
	HonBlue, Inc.		17.71	17.71
	General Oceanics		245.24	245.24
	URS		43,524.24	43,524.24
	USCG		12,777.37	12,777.37
	Other	1,254.26		1,254.26
		439,905.81	147,866.75	587,772.56
Temporary Pipeline	C&H Ishii	54,071.90		54,071.90
	Tinker Engineering	14,708.00		14,708.00
	HELCO Internal Labor	10,256.00		10,256.00
	HELCO Materials	32,289.00		32,289.00
	Hilo Mechanical	4,397.00		4,397.00
	Kagami	57,912.53		57,912.53
	Eaves & Meredith	730.53		730.53
	Arakaki Mechanical	31,254.93		31,254.93
	IMC (Island Mechanical)	66,259.00		66,259.00
		271,878.89	-	271,878.89
Repair Pipeline	HELCO Internal Labor	1,476.00		1,476.00
	HELCO Material	1,433.00		1,433.00
	Contractor	86.00		86.00
		2,995.00	-	2,995.00
Total Costs		714,779.70	147,866.75	862,646.45
HELCO and Chevron Cost Share of 50% Each				431,323.23

Hawaii Electric Light Company, Inc.
Hualani Oil Spill
Cost Summary Sheet

		Total Actuals	HELCO Labor	Equipment Rental	Cost of Supplies	Consultant's Fees	Outside Service Fees & Costs	Disposal Costs & Fees
H0001018								
PR010446	HELCO Pipeline Cleanup	250,042.52	2,716.79	6,470.83	2,602.39		229,224.17	9,028.34
PR010447	Unified Command	40.54			40.54			
PR010448	Deputy Incident Command	1,509.30	1,509.30					
PR010449	Legal Services	38,091.53					38,091.53	
PR010450	Public Information Svc	2,376.88	2,376.88					
PR010451	Safety Services	4,912.98	4,912.98					
PR010452	Liason Services	4,647.18	1,583.40				3,063.78	
PR010453	Administrative Services	2,716.47	2,716.47					
PR010454	Operations Section Svcs	8,925.56	8,660.06		265.50			
PR010456	Shoreline Unit	42.34			42.34			
PR010457	Disposal Unit	2,661.52					2,661.52	
PR010458	On Scene/Staging Area	18,461.43	16,962.19		986.24		513.00	
PR010459	Planning Section Svc	4,955.08	4,903.46		51.62			
PR010460	Situation Unit	2,893.87	2,893.87					
PR010461	Documentation Unit	853.54	853.54					
PR010462	Resource Unit	937.68	937.68					
PR010463	Environmental Unit	28,691.46	13,492.09		25.57	4,996.45	10,177.35	
PR010464	Plan Dev Unit	1,156.82	1,156.82					
PR010466	Logistic Section Svc	17,406.94	13,146.03	1,008.00	1,404.94		1,847.97	
PR010468	Procurement Unit	7,261.23	6,732.85		528.38			
PR010471	Transportation Unit	1,745.82	1,405.82				340.00	
PR010472	Finance Section Svc	1,214.67	1,214.67					
PR010473	Insurance & Claims Unit	149.20			149.20			
PR010474	Cost Tracking Unit	528.42	528.42					
PR010475	HELCO Pipeline Repair	129,114.78	4,366.57		307.63		124,440.58	
	Grand Total Project Cost	531,337.76	93,069.89	7,478.83	6,404.35	4,996.45	410,359.90	9,028.34

HELCO
Monthly Reserve Accruals
2001 - 2005
($ in 000's)

2001		2002		2003		2004		2005	
(5.0)	1/01 al accr	(4.2)	2/02 lf accr	149.7	4/03 gl accr	64.0	3/04 gl accr	61.0	3/05 gl accr
1.7	1/01 lf accr	5.0	3/02 gl accr	(21.0)	4/03 lf accr	(7.0)	3/04 al accr	125.0	5/05 gl perreira settlement
(9.5)	2/01 lf accr	3.8	3/02 lf accr	(89.7)	4/03 al accr	45.0	6/04 gl accr	(185.0)	6/05 gl accr
(1.0)	3/01 gl accr	25.0	5/02 gl accr	(9.4)	6/03 gl accr	9.2	6/04 al accr	(4.0)	6/05 al accr
(8.5)	3/01 lf accr	10.0	5/02 lf accr	70.0	9/03 gl accr	(18.0)	9/04 gl accr	(106.0)	12/05 gl accr
(5.0)	4/01 gl accr	20.0	6/02 gl accr	(0.1)	11/03 gl accr	(4.7)	9/04 al accr	(30.0)	3/05 lf accr
(0.6)	4/01 lf accr	(2.3)	6/02 lf accr	(31.1)	11/03 al accr	65.0	12/04 gl accr	(60.0)	6/05 lf accr
10.0	5/01 gl accr	(1.3)	7/02 lf accr	(204.3)	12/03 gl accr	(20.6)	3/04 lf accr	6.0	10/05 gl luhiau settlement
12.1	5/01 lf accr	(0.4)	8/02 lf accr	3.5	12/03 al accr	65.5	6/04 lf accr	(2.0)	12/05 lf accr
(0.2)	6/01 lf accr	15.0	9/02 gl accr	20.0	6/03 lf accr	(2.5)	9/04 lf accr		
(0.4)	8/01 lf accr	(0.4)	9/02 lf accr	(10.0)	9/03 lf accr	(41.8)	other		
(1.2)	11/01 lf accr	(25.0)	10/02 gl accr	(5.0)	11/03 lf accr				
(75.0)	12/01 gl accr	22.1	11/02 lf accr	(10.0)	12/03 lf accr				
45.0	12/01 lf accr	110.0	11/02 gl accr	(61.0)	other				
150.0	12/01 H000005444 Kona Hospital settlement	128.4	12/02 gl accr						
		30.7	12/02 lf accr						
		(1.8)	other						
		24.0	10/02 Gingway settlement						
187.4		358.6		(198.4)		154.2		(195.0)	

CA-IR-270

Ref: T-9, page 109, & response to CA-IR-134 (Pension Asset).

Referring to page 3 of the response to CA-IR-134, the Company provided information regarding the amount of NPPC included in each rate case test year since adoption of FAS87, showing the amounts allocated between expense and capital/billable accounts. The NPPC in Docket No. 99-0207 was "negative." Please provide the following:

a. Are the NPPC amounts listed for the four dockets preceding HELCO's last rate case also "negative" values or are some of the values "positive?"

b. Referring to the response to part (a) above, please confirm that the test year NPPC amounts for each of the four preceding dockets are positive values. If this cannot be confirmed, please explain.

HELCO Response:

a. For the four dockets preceding HELCO's last rate case (Docket No. 99-0207, test year 2000 rate case), all of the NPPC values are "positive". A corrected page 3 of HELCO's response to CA-IR-134 is attached as page 2 of this response.

b. See response to part a. above.

Hawaii Electric Light Company, Inc.
Employee Benefits Transferred
Based on Test Year Rebuttal Testimonies

Corrected Schedule **

		($Thousands)			
Docket No.	Test Year	Total NPPC	Expense	Capital	Billable
99-0207	2000	(3,002)	(1,954)	(1,016)	(32)
94-0140	1996	2,446	1,454	943	49
7764	1994	2,538	1,455	1,047	36
6999	1992	2,213	1,338	819	56
6432	1990	1,700	1,091	592	17

** The only change to this schedule (originally submitted as page 3 of HELCO's response to CA-IR-134) is the insertion of brackets around the amounts for Docket No. 99-0207 (to indicate "negative" values).

CA-IR-271

Ref: T-9, page 120, HELCO-923 & response to CA-IR-138 (Abandoned Capital Projects).

Pages 3-12 of the response to CA-IR-138 provided a detailed listing of line items comprising the five abandoned project "observations" set forth on HELCO-923 in excess of $90,000. Using Pages 3 and 4 of the response to CA-IR-138 as an example, there are approximately 124 line items totaling $219,588. Each line item appears to have a different assigned work order number. Please provide the following:

a. Please confirm that there were 124 separate, unrelated abandoned construction projects, or work orders, that comprise the $219,588 for calendar year 2001. If this cannot be confirmed, please explain.

b. Please identify and describe the type of information typically compiled, maintained and retained by HELCO that would explain the nature and scope of the original work order and why each project (or line item) was subsequently abandoned.

HELCO Response:

a. Whether each of the 124 line items on pages 3 and 4 of HELCO's response to CA-IR-138 represent separate, unrelated abandoned construction projects cannot be confirmed without reviewing/researching the documents maintained with respect to each of the line items. It would require a review of a large number of documents and a significant amount of time to locate the documents (including finding files from storage or locating on microfilm), and reviewing the documents. For the 427 lines items listed on pages 3 – 12 of HELCO's response to CA-IR-138, this results in a review of an estimated 850 – 1,200 + documents and a significant amount of time to locate and review the documents which would be unduly burdensome. However, without reviewing all of the documents maintained with respect to each of the line items, based on the project descriptions as shown, the majority of the line items (i.e. at least 95% of the line items) should be separate, unrelated abandoned construction projects. While most of the line items represent separate, unrelated abandoned construction projects, a few of the line items could relate to the same project. These related line items are typically tracked by assigning what is referred to as "parent" work orders.

Of the 124 line items on pages 3 and 4 of HELCO's response to CA-IR-138, different parent work orders were assigned to 6 pairs of work orders. It appears, therefore, that the 124 line items represent 118 separate, unrelated abandoned construction projects which comprise the $219,588 for calendar year 2001. The parent work orders assigned to the different pairs of work orders shown on HELCO's response to CA-IR-138 are listed on page 4 of this response.

Similarly, the 83 line items on pages 6 and 7 of HELCO's response to CA-IR-138 appear to represent 82 separate, unrelated abandoned construction projects which comprise the $168,522 for calendar year 2004. The 214 line items on pages 8 through 12 of HELCO's response to CA-IR-138 appear to represent 206 separate, unrelated abandoned construction projects which comprise the $251,008 ($152,737.70 + $98,270.71) for calendar year 2005.

On page 5 of HELCO's response to CA-IR-138, of the 6 listed line items shown, it appears that 5 of the line items represent separate, unrelated abandoned construction projects which comprise $22,482.96 of the $103,569.38 total for calendar year 2003. One of the line items, WO #EE003226, appears to represent four different abandoned projects which comprise the remaining $81,086.42 for 2003. The four projects are listed in HELCO's response to CA-IR-272.

b. The type of information typically compiled, maintained and retained by HELCO that would explain the nature and scope of the original work order and why the project was subsequently abandoned (cancelled in the context described below) includes one or more of the following documents:

1) A Residential or Commercial Service Request form, which is used to log the initial customer request for service. These forms may also contain notes as to the reason for

project cancellation, where the project is cancelled before the proposal letter stage (see number 2 below).

2) A HELCO proposal letter, which is sent to the customer identifying the services to be provided by HELCO, as well as tasks required by the customer. A firm cost to the customer is included with the letter unless the customer requests a rough cost estimate.

3) A HELCO cancellation letter is sent to the customer on larger projects when the customer has not responded by the proposal letter's response due date (usually 6 months).

Hawaii Electric Light Company, Inc.
Abandoned Construction Projects Assigned To The Same Parent Work Order Number
Consistent with HELCO's Response To CA-IR-138

A Page # (1)	B Work Order # (2)	C Work Order Description (2)	D Amount (2)	E Project Amount	F Parent Work Order #
2001					
3	EE010189	MAFFIT, WARREN O	103.38		H0003700
3	EE010277	Warren O. Maffit - Tsf. Inst. Desig	385.85	489.23	H0003700
3	EE010383	Nielsen, Gregory & Cinnamon	86.44		H0003765
3	EE012206	Nielsen, Gregory & Cinnamon-Transformer	510.75	597.19	H0003765
3	EE016820	Gilman, Dante P	1,873.15		H0006025
3	EE017260	Gilman, Dante P	319.90	2,193.05	H0006025
3	EE017000	Giusti, Jessica M SVC-D	200.12		H0006088
3	EE017133	GIUSTI, JESSICA M TSF-D	747.19	947.31	H0006088
3	EE017627	Grogg, Danny	200.12		H0006320
3	EE017680	Grogg, Danny - TSF-D	570.57	770.69	H0006320
4	EE019601	Tower, Joe	383.44		H0007058
4	EE020445	Tower, Joe - Secondary	1,268.66	1,652.10	H0007058
2004					
6	EE040114	KUKIO KUA'AU COTTAGES 20-30 LE	6,137.09		H0014382
6	EE043242	Prelim Materials Ku'a Au Cottages	755.19	6,892.28	H0014382
2005					
8	EE022485	HINAU, GLADYS E	146.64		H0008144
8	EE022628	Gladys Hinau - Transf Install	597.71	744.35	H0008144
8	EE055650	RACINE, MARK (RLOC) - D	780.06		H0020043
8	EE056070	RACINE, MARK (RLOC) - I	2,073.91	2,853.97	H0020043
8	EE075515	GRUNE, RICHARD - TSF - D	352.08		H0027253
8	EE075517	GRUNE,RICHARD - TSF - I	18.55	370.63	H0027253
10	EE000175	KANAI, RONALD RELOCATION	338.81		H0000097
10	EE000176	KANAI, RONALD RELOCATION	30.99	369.80	H0000097
10	EE013793	SPIES, JONATHAN	744.08		H0004973
10	EE020438	JONATHAN SPIES - INSP	2,482.68	3,226.76	H0004973
10	EE036691	ROBINSON, RICK (RLOC) - D	359.85		H0013196
10	EE037030	Robinson, Rick - SVC-I	262.33	622.18	H0013196
10	EE043802	CH DWS PUALANI WATER STORAGE	774.00		H0015696
11	EE064596	CH DWS PUALANI WATER STORAGE-INSP	35.48	809.48	H0015696
11	EE067689	TESHIMA, HAROLD (RLOC)-D	818.34		H0024568
11	EE069128	TESHIMA, HAROLD (RLOC)-I	3,948.04	4,766.38	H0024568

(1) Page number from HELCO's response to CA-IR-138
(2) Information as shown on HELCO's response to CA-IR-138

CA-IR-272

Ref: T-9, page 120, HELCO-923 & response to CA-IR-138 (Abandoned Capital Projects).

Pages 3-12 of the response to CA-IR-138 provided a detailed listing of five abandoned project "observations" set forth on HELCO-923 in excess of $90,000, including 15 line items or abandoned projects individually exceeding $8,000. For each of the items listed below, please provide a copy of the original work order documentation describing and authorizing the initial project scope, as well as any related documentation associated with the subsequent abandonment, including information explaining the basis or rationale for the abandonment:

(a) Transferred to EE021418 in 2001:

1.	EE001856	Laupahoehoe Seacliff LE	$8,692.65
2.	EE016945	Kaawa III, David H & Madeline	9,839.14
3.	EE018067	Ayers, Joseph & Lora	8,015.33
4.	EE020934	Aina Lea Golf Res Community	8,199.14

(b) Transferred to EE021416 in 2003:

1.	EE003226	transfer new distr facil-OH to clearing	81,086.42
2.	WH688100	Coll Eng RPR Ahualoa Conv *	9,311.23

(c) Transferred to EE021418 in 2004:

1.	EE005566	Waikoloa Vill S/D Unit 2a2 Ph2	17,974.63
2.	EE005567	Waikoloa Vill S/D Unit 2a2 Ph3	11,286.91
3.	EE009484	Waikoloa Vill Unit 2a2 Ph1b	15,498.35
4.	EE013598	Parker Ranch Center Ph2 (Oh)	15,850.26
5.	EE018658	Vienna, Jason A Sspp Le	8,138.42

(d) Transferred to EE021418 in 2005:

1.	EE026003	Yagong, Dominic Le	35,389.49
2.	EE028761	Brilhante-Hawaii Le	9,757.52
3.	EE044955	Aina Lea Golf Res Comm Offsite	16,801.16
4.	EE063667	Prelim Materials China US Center	15,495.77

HELCO Response:

The requested information is voluminous, and is available for inspection at HECO's Regulatory Affairs Division office, Suite 1301, Central Pacific Plaza, 220 South King Street, Honolulu, Hawaii. Please contact Dean Matsuura at 543-4622 to make arrangements to inspect the requested information.

In addition, pages 4, 5, 8, 9,10, 11, 12, 13, 14, 15, 16, 19, 20, 21, 22, 23, 24, 25, 26, 27, 28, 29, 30, 31, 33, 34, 35, 36, 37, 41, 42, 43, 44, 45, 46, 50, and 53 are confidential and will be provided pursuant to Protective Order No. 22593, dated June 30, 2006.

CA-IR-273

Ref: T-9, page 120, HELCO-923 & response to CA-IR-138 (Abandoned Capital Projects).

Referring to the 15 abandoned projects individually exceeding $8,000 [see pages 3-12 of the response to CA-IR-138], please provide the following information for each abandoned project, to the extent such information was not previously supplied in response to the immediately preceding Consumer Advocate information request:

a. Prior to initiating the original work, did HELCO collect any deposits or advances from the customer or potential customer before commencing construction activity?
   1. If not, why did HELCO not collect any deposits or advances prior to commencing construction work? Please explain.
   2. If so, please identify the amount collected and indicate whether the abandoned project amount is net or gross of such collections.
   3. If such collections were not used to reduce the amount of the abandonment, please explain HELCO's accounting for such collections and explain why said collections were not used to reduce the amount of the abandonment.

b. Do the abandoned project amounts include the cost of any materials that were reusable, or actually used, for other maintenance or capital projects?
   1. If so, please explain why the cost of these materials was not removed from the abandonment amount.
   2. If so, did HELCO attribute a cost of "zero" to the actual maintenance or capital project in which the materials were actually used? Please explain.

HELCO Response:

a. As a general rule, 10% of the estimated project cost is collected upon customer acceptance of HELCO's proposal letter, for projects with estimated costs above $100,000.

a.1. Deposits are generally not collected for projects with estimated costs of $100,000 or less (see response to part a. above).

a.2. With respect to the 15 abandoned projects listed by the Consumer Advocate in CA-IR-272, deposits were collected for two projects, i.e. the "Laupahoehoe Seacliff LE" project abandoned in 2001 (see item a.1 listed by the Consumer Advocate in CA-IR-272), and the "Aina Lea Golf Res Comm Offsite" project abandoned in 2005 (see item d.3 listed by the Consumer Advocate in CA-IR-272). For the Laupahoehoe Seacliff LE project, the

deposit was $33,531, and for the Aina Lea Golf Res Comm Offsite project, the deposit was $52,707. For both projects, the abandoned project amount is gross of the deposit amounts.

a.3. With respect to the Laupahoehoe Seacliff LE project, the abandoned project amount is gross of the deposit because the deposit was returned in full upon cancellation of the project. For projects with estimated costs of $100,000 or less, HELCO does not normally charge the customer for preliminary work if the project is cancelled.

With respect to the Aina Lea Golf Res Comm Offsite project, the deposit was refunded net of the $16,801 abandoned project amount. However, the abandoned project amount is gross of the deposit amount because the offsetting deposit amount retained by HELCO was inadvertently not transferred from Account No. 252 (Customer Advances for Construction), where the deposit was initially recorded, to the cost of project.

b. No, abandoned project amounts typically do not include the cost of materials used elsewhere. As a general rule, if material costs have been incurred, the costs of reusable material are transferred from the abandoned project to where the material is expected to be used, e.g. to stock material or to another capital or maintenance project. If the material is not usable elsewhere, the costs are written off.

b.1. With respect to the "Prelim Materials China US Center" project (see item d.4 listed by the Consumer Advocate in CA-IR-272), the $15,496 abandoned project amount represents the cost of a padmounted switchgear purchased for the project, which will be used on another project. However, the China US Center abandoned project cost was inadvertently not zeroed out at the time the project was cancelled.

b.2. The original response to this part b.2. was incorrect. The revised response is as follows: Upon cancellation of the China US project, the switchgear purchased for the project was taken into inventory and the following accounting entry was recorded:

1) Dr. Materials Inventory

Cr. Stores Clearing

Note that the credit should have been recorded against the China US project to zero out the abandoned project costs.

The switchgear was recently issued to the Kaupulehu Lot 4A project, and the following accounting entry was recorded:

2) Dr. Construction Work in Progress (Kaupulehu Lot 4A project)

Cr. Materials Inventory

To correct the entry in item 1) above, HELCO made the following accounting entry in September 2006:

3) Dr. Stores Clearing

Cr. Abandoned Project Expense

In addition, HELCO will be adjusting downward by $3,000 ($15,000 divided by 5 years) its test year estimate, since the switchgear costs should not be included in the five-year average that was used to develop the test year estimate.

CA-IR-274

Ref: T-10, page 22, HELCO-1002 & response to CA-IR-147 (A/C 926000, Other Benefits Administration).

In response to CA-IR-147(b), HELCO revised the breakdown of other benefits costs set forth on HELCO T-10, page 22, but the total test year amount remained unchanged at $314,800. The response to part (b) also refers to a historical comparison of recorded amounts for 2000-2005, which is contained on page 3 of the response. However, it does not appear that the historical comparison is presented in a format consistent with the newly revised breakdown of test year amounts provided by HELCO. Please provide the following:

a. Do the historical amounts for 2000-2005, as set forth on page 3 of the response, include or exclude award program costs that were reclassified from Account 921 for purposes of preparing the 2006 budget?

   1. If the response to part (a) above indicates that the comparison excludes any historical award program costs reclassified from Account 921, please provide the recorded amounts charged to Account 921 in each year of the period 2000-2005 that are comparable to the $93,800 reclassified from Account 921 for purposes of the 2006 forecast test year (see HELCO-1002, footnote c).

   2. If the requested information cannot be provided, please explain why this information is not available.

   3. If the response to part (a) above indicates that the comparison includes historical award program costs reclassified from Account 921, please separately identify such recorded amounts reclassified from Account 921 and specify the line of page 3 of the response to CA-IR-147 in which such amounts were included.

b. In responding to CA-IR-147(b), HELCO chose to correct and revise the table on HELCO T-10, page 22. However, CA-IR-147(b) requested the Company to provide a breakdown of historical costs comparable to the table appearing at page 22 of HELCO T-10. Even though HELCO corrected and revised said table, the historical comparison set forth on page 3 of the response does not appear to conform to either the original or corrected breakdown. Please provide the following:

   1. Why did HELCO provide a historical comparison (see page 3 of CA-IR-147) in a different format than either the original or revised versions of the table shown on page 22? Please explain.

   2. Please either modify the historical comparison (2000-2005) provided on page 3 of the response to conform to the revised table shown on page 22 of HELCO T-10; or revise the 2006 budget breakdown to enable a full and accurate comparison of HELCO's forecast with historical levels, by line item.

HELCO Response:

a. The historical amounts on page 3 of the response to CA-IR-147 for 2000-2005 do not include award program costs that were reclassified from Account 921 for purposes of preparing the budget for 2006.

1. The historical numbers comparable to the $93,800 reclassified from Account 921 for 2006 are as follows:

2000	0
2001	$80,200
2002	$6,700
2003	$19,900
2004	$58,800
2005	($42,300)

These are the amounts that were charged to Account 921 in prior years for those awards. The ($42,300) for 2005 is due to an adjustment to the accrual for the prior year. The expense would be $17,400 without the adjustment.

2. N/A.

3. N/A.

b. 1. The revised table on page 22 of HELCO T-10 (see response to CA-IR-147(b)) is a breakdown of adjusted test year expenses. Since recorded expenses in years 2000-2005 do not include the same adjustments, the revised format was chosen to enable comparability.

2. Attached is an exhibit modifying the historical comparison to the revised table shown on HELCO T-10, page 22 that was filed in response to CA-IR-147(b).

CA-IR-274
Account 926000 - Other Benefits/Administration
($1000s)

	Recorded						TY Est
	2000	2001	2002	2003	2004	2005	2006
Plan and Conduct Training	82.1	115.7	67.9	21.3	71.9	45.3	117.8
Administration, Consulting	72.2	9.3	46.6	48.7	99.9	37.6	27.5
On Costs	35.1	31.3	50.8	49.5	77.7	56.2	75.7
Total	189.4 [1]	156.3 [1]	165.3 [1]	119.5 [1]	249.5 [1]	139.1 [1]	221.0
Safety/Hookina Reclassified from Account 921	0	80.2	6.7	19.9	58.8	-42.3	93.8
Total	189.4	236.5	172	139.4	308.3	96.8	314.8 [1]

Notes:
[1] HELCO-1002, Line 4

CA-IR-275

Ref: T-10, page 22, HELCO-1002 & response to CA-IR-147 (A/C 926000, Other Benefits Administration).

The response to CA-IR-147(d) provides a breakdown of the $93,800 of award program costs included in the test year forecast. Please provide the following:

a. For calendar years 2000-2005, please provide historical amounts for safety celebration and recognition awards comparable to the $56,000 test year amount.

b. For calendar years 2000-2005, please provide historical amounts for Hawaii Island United Way ("HIUW") appreciation gifts comparable to the $5,500 test year amount.

   1. Please identify and describe the typical appreciation gifts given by HELCO.

   2. Are the HIUW appreciation gifts provided to HELCO employees and/or non-employees? Please explain.

c. For calendar years 2000-2005, please provide historical amounts for Ho'okina awards comparable to the $32,300 test year amount.

d. Other than the $5,500 test year amount for HIUW appreciation gifts, does HELCO's test year forecast include any other charitable contributions or donations?

   1. If so, please provide the amount by recipient and by NARUC account.

HELCO Response:

a. Historical amounts for safety celebration and recognition awards are as follows:

2000	0
2001	$28,800
2002	$19,200
2003	0
2004	$46,900
2005	($53,300)
2006	$56,000 test year estimate

The ($53,300) for 2005 is due to an adjustment to the accrual for the prior year. The expense would be $8,600 without the adjustment.

b. Historical amounts for Hawaii Island United Way ("HIUW") are as follows:

2000	0
2001	$10,100
2002	$ 3,800
2003	$ 1,700
2004	$ 4,800
2005	$ 4,600
2006	$ 5,500 test year estimate

1. Appreciation gifts are clothing – shirts, windbreakers.
2. HIUW appreciation gifts are given to HELCO employees and some retirees.

c. Historical amounts for Ho'okina awards are as follows:

2000	0
2001	$ 51,400
2002	($12,600)
2003	$19,900
2004	$12,000
2005	$11,000
2006	$13,300

The ($12,600) for 2002 is due to an adjustment to the accrual for the prior year. The expense would be $17,300 without the adjustment.

d. HELCO's test year expenses do not include other charitable contributions or donations.

HIUW gifts are not considered charitable contributions or donations since they are given to employees and certain retirees who contribute to the HIUW campaign.

1. N/A.

CA-IR-276

Ref: HELCO-1304, Response to CA-IR-174, page 2, State Capital ITC and Renewable Energy Credit.

Please provide the following additional information:

a. State whether HELCO intends to file 2005 additions of $1,693,983, $2,035,061, or some other value in its actual tax return for 2005.
b. If some other value is expected to be filed, please provide the calculations of such amount.
c. Explain why zero is assumed for Renewable Credits for 2005 and 2006 and provide updated information if available.
d. Explain whether and where the Commission is believed to have approved the Company's 30-year amortization period for State ITC.
e. Explain whether and where the Commission is believed to have approved the Company's 30-year amortization of the Renewable Energy Credits.
f. Explain whether the annual amortization of $500,906 for 2006 should be increased by 1/30 of the $341,078 "2004 Post Year-end Adjustment" or by some other provided amount.
g. Explain how the $53,663 of amortization in 2006 of the vintage 2005 credits was calculated.

HELCO Response:

a. HELCO's 2005 Hawaii tax return, which is due on October 20, 2006, will show a capital goods excise tax credit of $1,609,889.

b. Please refer to the attached 50 page report at pages 3 to 52.

c. There were no 2005 additions that qualified for the renewable credit. There are no forecasted 2006 additions that will qualify for this credit.

d. In Docket No. 6432, the Commission approved a 30-year amortization period for the State ITC (D&O No. 10993 March 6, 1991).

e. HELCO is proposing a 25-year amortization period for renewable energy credits. The 25-year amortization period has not yet been approved by the Commission; the renewable energy credit was first earned by HELCO in 2002. The applicable property is recorded on HELCO's books in account 398; the assets in this account have a book life of 25 years.

f. The amortization of the 2004 post year-end adjustment (i.e., 2004 tax return true-up entry) was included in the $500,906 total amortization.

g. The amortization amount of $53,663 was calculated by dividing the actual 2005 capital goods excise tax credit of $1,609,889 by 30 (representing 30-year). Please note that the 2005 tax credit of $1,693,983 shown in CA-IR-174, page 2, was an estimate included in HELCO year-end tax provision calculation.

Hawaii Electric Light Company, Inc.
State ITC (eligible cost types 2xx, 5xx; closed to plant)
For Year 2005

Jrl Cd	EE	WO	Acct	Amount	ROW	S&I	land	auto limit (e)	interco billing	direct overheads	SITC basis
I	501	PR012371	3110	10,598.99		10,598.99					-
M	201	PR012484	3110	(0.00)						(0.00)	-
P	201	PR012484	3110	(0.00)							(0.00)
I	205	PR012484	3110	(0.00)							(0.00)
I	501	PR012484	3110	-							-
I	501	PR012695	3110	-							-
I	501	PR013106	3110	44,307.06		44,307.06					-
I	501	H0000887	3113	9,244.14		9,244.14					-
I	501	PR011984	3113	122,008.15		122,008.15					-
I	501	H0000576	3120	47,464.52							47,464.52
M	201	H0000735	3120	3,288.75						3,288.75	-
P	201	H0000735	3120	20,287.38							20,287.38
M	201	H0001070	3120	(0.00)						(0.00)	-
P	201	H0001070	3120	(0.00)							(0.00)
I	501	H0001070	3120	(0.00)							(0.00)
M	501	H0001070	3120	(6,000.00)						(6,000.00)	-
I	501	H0001073	3120	31,622.90							31,622.90
M	501	H0001073	3120	(10,000.00)						(10,000.00)	-
I	508	H0001073	3120	519.50							519.50
I	501	H0001074	3120	18,729.05							18,729.05
M	501	H0001074	3120	(10,000.00)						(10,000.00)	-
I	201	H0001082	3120	1.70							1.70
M	201	H0001082	3120	57,741.07						57,741.07	-
P	201	H0001082	3120	273,049.97							273,049.97
Q	201	H0001082	3120	(19.90)							(19.90)
I	205	H0001082	3120	3,060.41							3,060.41
I	501	H0001082	3120	371,866.65							371,866.65
M	501	H0001082	3120	(9,998.67)						(9,998.67)	-
I	503	H0001082	3120	3,560.65							3,560.65
I	508	H0001082	3120	166,368.79							166,368.79
M	201	H0001162	3120	6,947.31						6,947.31	-
P	201	H0001162	3120	66,672.78							66,672.78
I	501	H0001162	3120	41,423.89							41,423.89
M	201	H0001257	3120	12,141.55						12,141.55	-
P	201	H0001257	3120	2,848.35							2,848.35
S	201	H0001257	3120	42.28							42.28
I	205	H0001257	3120	970.65							970.65
I	501	H0001257	3120	21,204.67							21,204.67
M	501	H0001257	3120	(9,756.45)						(9,756.45)	-
I	506	H0001257	3120	18,850.00							18,850.00
M	201	PR000078 PW	3120	57,135.04						57,135.04	-
P	201	PR000078 PW	3120	220,003.19							220,003.19
Q	201	PR000078 PW	3120	1,047.79							1,047.79
I	205	PR000078 PW	3120	619.74							619.74
I	501	PR000078 PW	3120	1,373,427.80							1,373,427.80
M	501	PR000078 PW	3120	(359.37)						(359.37)	-
M	201	PR008925	3120	11,659.68						11,659.68	-
P	201	PR008925	3120	80,969.94							80,969.94
I	205	PR008925	3120	40.96							40.96
M	201	PR008960	3120	-						-	-
P	201	PR008960	3120	(0.00)							(0.00)
M	201	PR008961	3120	-						-	-
P	201	PR008961	3120	(0.00)							(0.00)
M	201	PR009438	3120	(84,487.18)						(84,487.18)	-
P	201	PR009438	3120	134,064.67							134,064.67
Q	201	PR009438	3120	(1,689.13)							(1,689.13)
I	205	PR009438	3120	208.29							208.29
M	205	PR009438	3120	(69.29)						(69.29)	-
I	501	PR009438	3120	3,800.00							3,800.00
I	501	PR009512	3120	2,078.96							2,078.96
I	506	PR009512	3120	2,691.53							2,691.53
M	201	PR009513	3120	77.74						77.74	-
P	201	PR009513	3120	433.31							433.31
I	205	PR009513	3120	36.86							36.86
I	501	PR009513	3120	38,094.45							38,094.45
I	201	PR009514	3120	20.83							20.83
M	201	PR009514	3120	56,817.01						56,817.01	-
P	201	PR009514	3120	101,861.61							101,861.61
S	201	PR009514	3120	175.02							175.02

Hawaii Electric Light Company, Inc.
State ITC (eligible cost types 2xx, 5xx; closed to plant)
For Year 2005

Jnl Cd	EE	WO	Acct	Amount	ROW	S&I	land	auto limit (a)	interco billing	direct overheads	BITC basis
I	205	PR009514	3120	154.66							154.66
M	205	PR009514	3120	34.65						34.65	-
I	501	PR009514	3120	6,503.34							6,503.34
I	550	PR009515	3120	13,933.82					13,933.82		-
M	550	PR009515	3120	(66.59)						(66.59)	-
I	501	PR010938	3120	31,679.48							31,679.48
I	205	PR010939	3120	126.59							126.59
I	201	PR010940	3120	1,092.00							1,092.00
M	201	PR010940	3120	16,496.37						16,496.37	-
P	201	PR010940	3120	105,362.05							105,362.05
I	205	PR010940	3120	94.84							94.84
I	501	PR010940	3120	141.46							141.46
I	501	PR010941	3120	125,481.84							125,481.84
M	201	PR011445	3120	-						-	-
P	201	PR011445	3120	(0.00)							(0.00)
I	205	PR011445	3120	(0.00)							(0.00)
I	501	PR011445	3120	(0.00)							(0.00)
I	501	PR011663	3120	19,218.63							19,218.63
I	205	PR011837	3120	(120.29)							(120.29)
I	503	PR011837	3120	1,099.99							1,099.99
I	501	PR011839	3120	7,826.02							7,826.02
M	201	PR011840	3120	76,291.16						76,291.16	-
P	201	PR011840	3120	16,053.72							16,053.72
M	205	PR011840	3120	34.64						34.64	-
I	501	PR011840	3120	9,937.91							9,937.91
M	201	PR011953	3120	1,667.57						1,667.57	-
P	201	PR011953	3120	9,295.24							9,295.24
M	201	PR011954	3120	1,844.72						1,844.72	-
P	201	PR011954	3120	10,282.69							10,282.69
M	201	PR011955	3120	1,841.73						1,841.73	-
P	201	PR011955	3120	10,266.02							10,266.02
M	201	PR012412	3120	12,996.90						12,996.90	-
P	201	PR012412	3120	9,650.08							9,650.08
M	501	PR012412	3120	9,895.77						9,895.77	-
I	506	PR012412	3120	18,850.00							18,850.00
I	501	H0000856	3140	71,709.11							71,709.11
M	501	H0001101	3140	(7,000.00)						(7,000.00)	-
I	201	PR000085 PW	3140	32,999.14							32,999.14
M	201	PR000085 PW	3140	8,831.51						8,831.51	-
P	201	PR000085 PW	3140	51,019.76							51,019.76
I	501	PR000085 PW	3140	104,001.65							104,001.65
M	501	PR000085 PW	3140	5,000.00						5,000.00	-
I	201	H0001125	3150	1,665.14							1,665.14
M	201	H0001125	3150	3,331.70						3,331.70	-
P	201	H0001125	3150	31,546.90							31,546.90
S	201	H0001125	3150	920.16							920.16
I	205	H0001125	3150	535.45							535.45
I	501	H0001125	3150	69,055.85							69,055.85
M	501	H0001125	3150	62.87						62.87	-
I	506	H0001125	3150	13,124.92							13,124.92
M	201	H0001254	3150	22,773.88						22,773.88	-
P	201	H0001254	3150	218,559.36							218,559.36
Q	201	H0001254	3150	(118,630.33)							(118,630.33)
I	501	H0001254	3150	117,971.35							117,971.35
M	501	H0001254	3150	(14,613.93)						(14,613.93)	-
M	201	H0001255	3150	12,810.31						12,810.31	-
P	201	H0001255	3150	122,939.64							122,939.64
Q	201	H0001255	3150	(66,729.57)							(66,729.57)
I	501	H0001255	3150	77,235.19							77,235.19
M	501	H0001255	3150	2,613.93						2,613.93	-
I	501	PR000069 PW	3150	-							-
I	501	PR000071 PW	3150	-							-
M	201	PR011512	3150	1,533.23						1,533.23	-
P	201	PR011512	3150	9,214.97							9,214.97
M	501	PR011512	3150	(2,000.00)						(2,000.00)	-
M	201	H0000527	3160	1,031.93						1,031.93	-
P	201	H0000527	3160	6,892.57							6,892.57
I	501	H0000527	3160	56,720.60							56,720.60
I	506	H0000527	3160	4,757.00							4,757.00

Hawaii Electric Light Company, Inc.
State ITC (eligible cost types 2xx, 5xx; closed to plant)
For Year 2005

Jnl Cd	EE	WO	Acct	Amount	ROW	S&I	land	auto limit (a)	interco billing	direct overheads	SITC basis
I	508	H0000527	3160	6,957.24							6,957.24
M	201	H0001069	3160	1,015.87						1,015.87	-
P	201	H0001069	3160	9,749.32							9,749.32
I	205	H0001069	3160	38.39							38.39
I	501	H0001069	3160	5,583.48							5,583.48
M	201	PR011946	3160	2,503.52						2,503.52	-
P	201	PR011946	3160	24,026.08							24,026.08
M	201	PR012096	3160	912.56						912.56	-
P	201	PR012096	3160	5,086.74							5,086.74
M	201	PR012104	3160	74.09						74.09	-
P	201	PR012104	3160	711.01							711.01
M	201	PR012205	3160	4,015.78						4,015.78	-
P	201	PR012205	3160	38,539.20							38,539.20
I	501	PR012205	3160	6,832.55							6,832.55
M	201	PR012888	3160	110.69						110.69	-
P	201	PR012888	3160	1,062.28							1,062.28
M	201	PR013181	3160	2,490.91						2,490.91	-
P	201	PR013181	3160	14,389.96							14,389.96
I	501	PR013181	3160	120.00							120.00
M	201	PR013428	3160	208.00						208.00	-
P	201	PR013428	3160	520.79							520.79
Q	201	PR013428	3160	(52.08)							(52.08)
I	501	PR013427	3310	11,665.91		11,665.91					-
I	201	H0000850	3330	2,983.52							2,983.52
M	201	H0000850	3330	13,517.09						13,517.09	-
P	201	H0000850	3330	45,326.17							45,326.17
S	201	H0000850	3330	4,048.32							4,048.32
I	205	H0000850	3330	358.66							358.66
I	501	H0000850	3330	3,333,653.95							3,333,653.95
M	501	H0000850	3330	43,256.26						43,256.26	-
P	501	H0000850	3330	98.80							98.80
I	502	H0000850	3330	270.82							270.82
I	521	H0000850	3330	299.43							299.43
I	550	H0000850	3330	6,644.60					6,644.60		-
M	550	H0000850	3330	(22.99)						(22.99)	-
M	201	H0001165	3330	78,037.48						78,037.48	-
P	201	H0001165	3330	207,000.69							207,000.69
I	205	H0001165	3330	1,726.68							1,726.68
I	501	H0001165	3330	9,546.32							9,546.32
M	501	H0001165	3330	(550.00)						(550.00)	-
I	503	H0001165	3330	2,285.12							2,285.12
I	505	H0001165	3330	893.16							893.16
M	201	PR012080	3350	225.81						225.81	-
P	201	PR012080	3350	2,167.07							2,167.07
I	501	PR012080	3350	4,190.00							4,190.00
M	201	PR012252	3350	1,348.26						1,348.26	-
P	201	PR012252	3350	12,939.16							12,939.16
Q	201	PR012252	3350	(390.00)							(390.00)
M	201	PR013285	3350	1,395.26						1,395.26	-
P	201	PR013285	3350	7,058.44							7,058.44
I	501	PR013285	3350	5,200.00							5,200.00
M	201	H0000343	3410	1,435.41						1,435.41	-
P	201	H0000343	3410	9,968.12		9,968.12					-
I	501	H0000343	3410	12,473.75		12,473.75					-
M	501	H0000343	3410	1,520.79						1,520.79	-
I	502	H0000343	3410	126,757.11		126,757.11					-
M	502	H0000343	3410	7,999.48						7,999.48	-
I	503	H0000343	3410	7,999.48		7,999.48					-
M	503	H0000343	3410	(7,999.48)						(7,999.48)	-
I	501	LA000231	3411	29,622.59		29,622.59					-
M	501	LA000231	3411	1,373.79						1,373.79	-
P	501	LA000231	3411	13,018.95		13,018.95					-
M	201	H0001040	3420	417.99						417.99	-
P	201	H0001040	3420	4,011.37							4,011.37
I	501	PR010676	3420	378,176.03							378,176.03
M	501	PR010676	3420	(286,571.00)						(286,571.00)	-
M	201	PR010677	3420	6,131.62						6,131.62	-
P	201	PR010677	3420	15,127.92							15,127.92
Q	201	PR010677	3420	1,021.81							1,021.81

Hawaii Electric Light Company, Inc.
State ITC (eligible cost types 2xx, 5xx; closed to plant)
For Year 2005

Jnl Cd	EE	WO	Acct	Amount	ROW	S&I	land	auto limit (a)	interop billing	direct overheads	SITC basis
I	501	PR010678	3420	15,104.70							15,104.70
I	550	PR010678	3420	25,505.87					25,505.87		-
I	201	H3164000	3430	2,535.61							2,535.61
M	201	H3164000	3430	8,842.78						8,842.78	-
P	201	H3164000	3430	68,180.58							68,180.58
Q	201	H3164000	3430	-							-
I	501	H3164000	3430	3,174,578.68							3,174,578.68
M	501	H3164000	3430	(0.00)						(0.00)	-
I	502	H3164000	3430	13,066.88							13,066.88
I	521	H3164000	3430	2.60							2.60
I	522	H3164000	3430	236.51							236.51
M	550	H3164000	3430	1,296.69						1,296.69	-
M	201	PR012517	3430	1,497.40						1,497.40	-
P	201	PR012517	3430	10,294.06							10,294.06
I	205	PR012517	3430	465.09							465.09
M	205	PR012517	3430	2,864.34						2,864.34	-
I	501	PR012518	3430	6,521.69							6,521.69
M	201	PR012520	3430	495.52						495.52	-
P	201	PR012520	3430	1,828.42							1,828.42
I	205	PR012520	3430	1,050.19							1,050.19
M	201	PR012523	3430	179.56						179.56	-
P	201	PR012523	3430	1,037.34							1,037.34
I	205	PR012523	3430	52.14							52.14
I	205	PR012524	3430	26.66							26.66
I	501	PR012859	3430	542,967.15							542,967.15
M	501	PR012859	3430	11,718.68						11,718.68	-
I	501	PR012860	3430	379,363.31							379,363.31
M	501	PR012860	3430	5,174.52						5,174.52	-
I	501	PR012861	3430	541,827.64							541,827.64
M	501	PR012861	3430	174,137.09						174,137.09	-
I	201	PR012922	3430	55,918.00							55,918.00
M	201	PR012922	3430	2,238.72						2,238.72	-
M	201	PR013084	3430	1,247.55						1,247.55	-
P	201	PR013084	3430	11,429.44							11,429.44
I	501	PR013084	3430	14,459.49							14,459.49
M	201	H3166000	3440	669.77						669.77	-
P	201	H3166000	3440	4,595.46							4,595.46
I	501	H3166000	3440	40,482.56							40,482.56
M	501	H3166000	3440	1.88						1.88	-
P	501	H3166000	3440	18.08							18.08
I	501	PR012055	3440	5,510.06							5,510.06
M	201	H0000855	3450	193,643.78						193,643.78	-
P	201	H0000855	3450	(0.00)							(0.00)
Q	201	H0000855	3450	-							-
S	201	H0000855	3450	(3,411.13)							(3,411.13)
I	205	H0000855	3450	(0.00)							(0.00)
M	205	H0000855	3450	615.59						615.59	-
I	501	H0000855	3450	(0.00)							(0.00)
M	501	H0000855	3450	74,998.58						74,998.58	-
I	503	H0000855	3450	(0.00)							(0.00)
M	503	H0000855	3450	5,657.52						5,657.52	-
I	521	H0000855	3450	(0.00)							(0.00)
M	521	H0000855	3450	39.28						39.28	-
I	550	H0000855	3450	-					-		-
M	550	H0000855	3450	5,329.89						5,329.89	-
M	201	H0000858	3450	4,405.03						4,405.03	-
P	201	H0000858	3450	30,654.83							30,654.83
I	205	H0000858	3450	633.38							633.38
M	201	H0000894	3450	4,385.76						4,385.76	-
P	201	H0000894	3450	30,456.62							30,456.62
I	205	H0000894	3450	333.93							333.93
M	201	PR009444	3450	4,343.45						4,343.45	-
P	201	PR009444	3450	30,392.49							30,392.49
I	205	PR009444	3450	91.61							91.61
M	201	H0000526	3460	1,503.87						1,503.87	-
P	201	H0000526	3460	9,020.26							9,020.26
I	501	H0000526	3460	53,491.73							53,491.73
I	506	H0000526	3460	4,757.00							4,757.00
I	501	H0001024	3460	42,040.43							42,040.43

Hawaii Electric Light Company, Inc.
State ITC (eligible cost types 2xx, 5xx; closed to plant)
For Year 2005

Jrl Cd	EE	WO	Acct	Amount	ROW	S&I	land	audo limit (a)	interco billing	direct overheads	SITC basis
M	550	H0001024	3460	101,191.54						101,191.54	-
M	201	H0001062	3460	810.09						810.09	-
P	201	H0001062	3460	7,774.29		7,774.29					-
I	205	H0001062	3460	1,916.59		1,916.59					-
I	501	H0001062	3460	2,701,701.41		2,701,701.41					-
M	501	H0001062	3460	98,440.03						98,440.03	-
I	502	H0001062	3460	81.24		81.24					-
I	550	H0001062	3460	74,230.88					74,230.88		-
M	550	H0001062	3460	(0.00)						(0.00)	-
I	501	H0001137	3460	(0.00)							(0.00)
M	201	H3111000	3460	2,459.79						2,459.79	-
P	201	H3111000	3460	23,324.90							23,324.90
Q	201	H3111000	3460	26.58							26.58
I	501	H3111000	3460	24,432.31							24,432.31
M	201	H3147000	3460	1,038.79						1,038.79	-
P	201	H3147000	3460	8,136.95							8,136.95
I	501	H3147000	3460	31,893.92							31,893.92
M	501	H3147000	3460	1.88						1.88	-
P	501	H3147000	3460	18.08							18.08
I	505	H3147000	3460	23,368.96							23,368.96
I	205	PR009434	3460	-							-
I	521	PR009434	3460	-							-
M	201	PR011310	3460	1,119.31						1,119.31	-
P	201	PR011310	3460	7,773.04							7,773.04
Q	201	PR011310	3460	11.96							11.96
M	201	PR011449	3460	1,074.19						1,074.19	-
P	201	PR011449	3460	8,239.06							8,239.06
M	201	PR011627	3460	105.06						105.06	-
P	201	PR011627	3460	1,008.27							1,008.27
M	201	PR011950	3460	5,336.08						5,336.08	-
P	201	PR011950	3460	29,744.00							29,744.00
M	201	PR011952	3460	2,496.09						2,496.09	-
P	201	PR011952	3460	23,954.84							23,954.84
M	201	PR012052	3460	438.19						438.19	-
P	201	PR012052	3460	2,442.55							2,442.55
M	201	PR012778	3460	1,953.62						1,953.62	-
P	201	PR012778	3460	18,748.80							18,748.80
M	201	PR012820	3460	90.65						90.65	-
P	201	PR012820	3460	869.96							869.96
M	201	PR012854	3460	493.51						493.51	-
P	201	PR012854	3460	4,736.16							4,736.16
M	201	PR012889	3460	148.46						148.46	-
P	201	PR012889	3460	1,424.80							1,424.80
M	201	PR012939	3460	54.27						54.27	-
P	201	PR012939	3460	520.79							520.79
M	201	PR012976	3460	434.24						434.24	-
P	201	PR012976	3460	2,508.59							2,508.59
M	201	PR013531	3460	144.97						144.97	-
P	201	PR013531	3460	362.96							362.96
M	201	PR013532	3460	208.00						208.00	-
P	201	PR013532	3460	520.79							520.79
Q	201	PR013532	3460	(52.08)							(52.08)
M	201	PR013611	3460	2,647.45						2,647.45	-
P	201	PR013611	3460	6,628.58							6,628.58
M	201	PR013644	3460	444.72						444.72	-
P	201	PR013644	3460	1,113.47							1,113.47
M	201	00004723 PW	3530	19,499.24						19,499.24	-
S	201	00006115 PW	3530	-							-
M	201	00006382 PW	3530	1,135.18						1,135.18	-
P	201	00006382 PW	3530	7,883.20							7,883.20
M	201	EE000732 PW	3530	931.01						931.01	-
P	201	EE000732 PW	3530	5,189.60							5,189.60
Q	201	EE000732 PW	3530	(62.40)							(62.40)
M	501	EE000732 PW	3530	32,000.00						32,000.00	-
M	201	EE000733 PW	3530	1,882.49						1,882.49	-
P	201	EE000733 PW	3530	14,320.80							14,320.80
Q	201	EE000733 PW	3530	1,060.80							1,060.80
I	501	EE000733 PW	3530	35,607.34							35,607.34
M	501	EE000733 PW	3530	(0.00)						(0.00)	-

Hawaii Electric Light Company, Inc.
State ITC (eligible cost types 2xx, 5xx; closed to plant)
For Year 2005

Jnl Cd	EE	WO	Acct	Amount	ROW	S&I	land	auto limit (a)	Interco billing	direct overheads	SITC basis
I	201	EE000749 PW	3530	(0.00)							(0.00)
M	201	EE000749 PW	3530	(0.00)						(0.00)	-
P	201	EE000749 PW	3530	(0.00)							(0.00)
S	201	EE000749 PW	3530	(0.00)							(0.00)
I	205	EE000749 PW	3530	(0.00)							(0.00)
I	501	EE000749 PW	3530	(0.00)							(0.00)
M	201	EE068101	3530	271.65						271.65	-
P	201	EE068101	3530	1,514.24							1,514.24
S	201	H0000759	3530	-							-
I	201	H0000832	3530	1,560.44							1,560.44
M	201	H0000832	3530	122,258.54						122,258.54	-
P	201	H0000832	3530	438,316.55							438,316.55
Q	201	H0000832	3530	6,872.40							6,872.40
S	201	H0000832	3530	8,298.77							8,298.77
I	205	H0000832	3530	815.83							815.83
I	501	H0000832	3530	382,004.05							382,004.05
I	506	H0000832	3530	55,951.13							55,951.13
I	521	H0000832	3530	336.00							336.00
M	521	H0000832	3530	(56.00)						(56.00)	-
I	550	H0000832	3530	19,761.08					19,761.08		-
M	550	H0000832	3530	226.10						226.10	-
M	201	H0001071	3530	375.13						375.13	-
P	201	H0001071	3530	3,600.04							3,600.04
I	505	H0001071	3530	3,080.00							3,080.00
I	201	H3191000	3530	10.42							10.42
M	201	H3191000	3530	2,991.74						2,991.74	-
P	201	H3191000	3530	27,624.02							27,624.02
I	501	H3191000	3530	12,046.08							12,046.08
I	201	H3194000	3530	10.41							10.41
M	201	H3194000	3530	2,984.91						2,984.91	-
P	201	H3194000	3530	27,585.95							27,585.95
I	501	H3194000	3530	39,142.28							39,142.28
M	201	SS001803	3530	(0.00)						(0.00)	-
P	201	SS001803	3530	(0.00)							(0.00)
M	201	SS001845	3530	425.24						425.24	-
P	201	SS001845	3530	2,370.37							2,370.37
I	501	TD016734	3530	(0.00)							(0.00)
S	201	00005586 PW	3550	1,890.97							1,890.97
I	501	00005586 PW	3550	1,523.44							1,523.44
S	201	00006153 PW	3550	514.21							514.21
I	505	00006153 PW	3550	2,352.85							2,352.85
I	505	00006541 PW	3550	1,248.00							1,248.00
S	201	00007358 PW	3550	276.25							276.25
I	501	00007358 PW	3550	1,315.67							1,315.67
S	201	00007379 PW	3550	314.76							314.76
I	505	00007379 PW	3550	1,000.00							1,000.00
S	201	00007490 PW	3550	39.10							39.10
S	201	00007633 PW	3550	568.66							568.66
I	501	00007633 PW	3550	269.53							269.53
S	201	00007920 PW	3550	82.21							82.21
S	201	00008298 PW	3550	2,180.51							2,180.51
I	201	EE000357 PW	3550	36.40							36.40
M	201	EE000357 PW	3550	33,534.53						33,534.53	-
P	201	EE000357 PW	3550	321,656.54							321,656.54
S	201	EE000357 PW	3550	11,629.25							11,629.25
I	205	EE000357 PW	3550	609.10							609.10
M	205	EE000357 PW	3550	34.19						34.19	-
I	501	EE000357 PW	3550	5,925.18							5,925.18
M	501	EE000357 PW	3550	69,790.12						69,790.12	-
I	505	EE000357 PW	3550	199,240.89							199,240.89
S	201	EE000609 PW	3550	2,872.11							2,872.11
I	505	EE000609 PW	3550	1,840.00							1,840.00
I	205	H0000453	3550	428.50							428.50
S	201	H0012069 PW	3550	8,095.95							8,095.95
I	501	H0012069 PW	3550	1,162.39							1,162.39
I	505	H0012069 PW	3550	10,660.27							10,660.27
I	505	TD019539	3550	2,940.00							2,940.00
I	501	TD021183	3550	(0.00)							(0.00)
S	201	00000282 PW	3560	(37.79)							(37.79)

YE 355 / 5,6

Hawaii Electric Light Company, Inc.
State ITC (eligible cost types 2xx, 5xx; closed to plant)
For Year 2005

Jnl Cd	EE	WO	Acct	Amount	ROW	S&I	land	auto limit (a)	interco billing	direct overheads	SITC basis
S	201	00001098 PW	3560	-							-
S	201	00001099 PW	3560	-							-
I	505	00001689 PW	3560	3,921.50							3,921.50
S	201	00002211 PW	3560	5,245.10							5,245.10
I	501	00002211 PW	3560	420.44							420.44
S	201	00003374 PW	3560	2,334.08							2,334.08
S	201	00003806 PW	3560	374.93							374.93
I	501	00005127 PW	3560	(338.54)							(338.54)
S	201	00007025 PW	3560	963.74							963.74
I	205	00007025 PW	3560	154.53							154.53
I	501	00007025 PW	3560	998.43							998.43
S	201	00007198 PW	3560	4,399.75							4,399.75
I	501	00007198 PW	3560	377.34							377.34
I	501	00007328 PW	3560	437.24							437.24
I	505	00007328 PW	3560	1,920.00							1,920.00
I	501	00007348 PW	3560	1,093.75							1,093.75
I	501	00007357 PW	3560	2,097.66							2,097.66
S	201	00007485 PW	3560	15,176.64							15,176.64
I	205	00007485 PW	3560	273.44							273.44
I	501	00007485 PW	3560	26,290.60							26,290.60
I	522	00007485 PW	3560	31.88							31.88
S	201	00007688 PW	3560	385.26							385.26
S	201	00007754 PW	3560	40.67							40.67
S	201	EE000401 PW	3560	197.32							197.32
S	201	EE000458 PW	3560	-							-
S	201	EE000669 PW	3560	-							-
S	201	EE000781 PW	3560	6,319.88							6,319.88
S	201	EE001200	3560	-							-
I	505	EE001200	3560	(200.00)							(200.00)
S	201	H0014760 PW	3560	1,709.11							1,709.11
I	501	H0014780 PW	3560	95.05							95.05
I	505	H0014780 PW	3560	1,220.00							1,220.00
S	201	TD018185	3560	(111.36)							(111.36)
S	201	TD021160	3560	845.01							845.01
S	201	00006782 PW	3570	(37.96)							(37.96)
I	501	00006782 PW	3570	(76.04)							(76.04)
I	501	LA000111	3601	555.00	555.00						-
M	501	LA000111	3601	(1,227.50)						(1,227.50)	-
I	501	EE034083	3602	-							-
I	201	EE046481	3602	-							-
M	501	LA000110	3602	(361.91)						(361.91)	-
I	201	EE000566 PW	3610	1,080.86							1,080.86
M	201	EE000566 PW	3610	183.46						183.46	-
P	201	EE000566 PW	3610	1,274.09							1,274.09
S	201	EE000566 PW	3610	384.82							384.82
I	205	EE000566 PW	3610	79.30							79.30
I	501	EE000566 PW	3610	3,942.00							3,942.00
I	505	EE000566 PW	3610	18,877.00							18,877.00
I	501	SS001722	3610	7,380.00							7,380.00
I	201	SS001800	3610	102.08							102.08
M	201	SS001800	3610	997.21						997.21	-
P	201	SS001800	3610	3,248.31							3,248.31
I	501	SS001800	3610	52,361.87							52,361.87
I	501	SS001805	3610	4,269.00							4,269.00
I	501	SS001820	3610	11,526.35							11,526.35
M	201	SS001821	3610	997.23						997.23	-
P	201	SS001821	3610	3,248.34							3,248.34
I	501	SS001821	3610	33,247.60							33,247.60
I	501	SS001822	3610	3,200.00							3,200.00
M	201	SS001826	3610	732.42						732.42	-
P	201	SS001826	3610	2,385.73							2,385.73
I	505	SS001826	3610	2,811.85							2,811.85
I	501	SS001834	3610	34,724.31							34,724.31
S	201	SS001837	3610	53.25							53.25
I	501	SS001837	3610	37,840.58							37,840.58
M	201	SS001899	3610	252.58						252.58	-
P	201	SS001899	3610	2,424.02							2,424.02
I	501	SS001899	3610	35,480.00							35,480.00
S	201	00005640 PW	3620	645.10							645.10

Hawaii Electric Light Company, Inc.
State ITC (eligible cost types 2xx, 5xx; closed to plant)
For Year 2005

Ind Cd	EE	WO	Acct	Amount	ROW	SAI	land	auto limit (a)	interco billing	direct overheads	SITC basis
S	201	00006176 PW	3620	61.29							61.29
I	205	00006176 PW	3620	437.70							437.70
I	501	00006176 PW	3620	21.92							21.92
I	521	00006176 PW	3620	14.00							14.00
M	201	EE000484 PW	3620	255.11						255.11	-
P	201	EE000484 PW	3620	1,430.00							1,430.00
M	201	EE007476	3620	(0.00)						(0.00)	-
P	201	EE007476	3620	(0.00)							(0.00)
I	205	EE007476	3620	(0.00)							(0.00)
M	201	EE007483	3620	(0.00)						(0.00)	-
P	201	EE007483	3620	(0.00)							(0.00)
M	201	EE007487	3620	(0.00)						(0.00)	-
P	201	EE007487	3620	(0.00)							(0.00)
I	205	EE007487	3620	(0.00)							(0.00)
M	201	EE007490	3620	(0.00)						(0.00)	-
P	201	EE007490	3620	(0.00)							(0.00)
M	201	EE007492	3620	(0.00)						(0.00)	-
P	201	EE007492	3620	(0.00)							(0.00)
M	201	EE007496	3620	(0.00)						(0.00)	-
P	201	EE007496	3620	(0.00)							(0.00)
M	201	EE030148	3620	-						-	-
P	201	EE030148	3620	(0.00)							(0.00)
I	201	EE060100	3620	(0.00)							(0.00)
M	201	EE060100	3620	(0.00)						(0.00)	-
P	201	EE060100	3620	(0.00)							(0.00)
I	501	EE060100	3620	(0.00)							(0.00)
I	201	EE061675	3620	18,440.11							18,440.11
M	201	EE061675	3620	21,186.77						21,186.77	-
P	201	EE061675	3620	300,963.52							300,963.52
I	201	H0000445	3620	19,809.64							19,809.64
M	201	H0000445	3620	55,726.07						55,726.07	-
P	201	H0000445	3620	482,461.44							482,461.44
S	201	H0000445	3620	23,292.08							23,292.08
I	205	H0000445	3620	2,427.15							2,427.15
I	501	H0000445	3620	31,113.52							31,113.52
I	505	H0000445	3620	96,500.00							96,500.00
I	521	H0000445	3620	574.00							574.00
I	501	H0000448	3620	1,094.00							1,094.00
M	201	H0000470	3620	345.70						345.70	-
P	201	H0000470	3620	1,713.92							1,713.92
M	201	H0000845	3620	(628.10)						(628.10)	-
M	201	H0000847	3620	982.37						982.37	-
P	201	H0000847	3620	4,708.03							4,708.03
S	201	H0000847	3620	24.94							24.94
I	501	H0000847	3620	56,038.99							56,038.99
I	501	H0000942	3620	18,236.86							18,236.86
M	501	H0000942	3620	(8,944.43)						(8,944.43)	-
I	521	H0000942	3620	28.00							28.00
I	501	H0000943	3620	23,577.04							23,577.04
M	501	H0000943	3620	(13,158.37)						(13,158.37)	-
I	205	H0000944	3620	23.95							23.95
I	501	H0000944	3620	24,875.33							24,875.33
M	501	H0000944	3620	(10,399.95)						(10,399.95)	-
I	501	H0000945	3620	24,155.36							24,155.36
M	501	H0000945	3620	(13,886.15)						(13,886.15)	-
I	521	H0000945	3620	214.00							214.00
I	205	H0001019	3620	35.87							35.87
I	201	H0001120	3620	(40.84)							(40.84)
M	201	H0001120	3620	30,166.49						30,166.49	-
P	201	H0001120	3620	220,047.99							220,047.99
S	201	H0001120	3620	1,433.87							1,433.87
I	205	H0001120	3620	222.75							222.75
I	501	H0001120	3620	6,903.71							6,903.71
I	505	H0001120	3620	173,300.00							173,300.00
I	521	H0001120	3620	518.00							518.00
I	522	H0001120	3620	387.41							387.41
I	201	H0001142	3620	18,894.00							18,894.00
M	201	H0001142	3620	38,863.29						38,863.29	-
P	201	H0001142	3620	458,002.42							458,002.42

Hawaii Electric Light Company, Inc.
State ITC (eligible cost types 2xx, 5xx; closed to plant)
For Year 2005

Jnt Cd	EE	WO	Acct	Amount	ROW	S&I	land	auto limit (a)	interco billing	direct overheads	SITC basis
S	201	H0001142	3620	5,262.21							5,262.21
I	205	H0001142	3620	990.08							990.08
I	501	H0001142	3620	490,629.50							490,629.50
I	521	H0001142	3620	322.00							322.00
I	522	H0001142	3620	367.41							367.41
M	201	H0001206	3620	7,344.56						7,344.56	-
P	201	H0001206	3620	40,939.60							40,939.60
I	205	H0001206	3620	605.49							605.49
I	501	H0001206	3620	6,478.36							6,478.36
M	201	H0001271	3620	4,457.17						4,457.17	-
P	201	H0001271	3620	42,775.20							42,775.20
S	201	H0001271	3620	172.73							172.73
I	205	H0001271	3620	287.24							287.24
I	501	H0001271	3620	10,803.36							10,803.36
I	505	H3303000	3620	324,632.78							324,632.78
I	501	H3304000	3620	72,124.95							72,124.95
M	201	SS001000	3620	(1,470.15)						(1,470.15)	-
P	201	SS001000	3620	1,472.40							1,472.40
Q	201	SS001000	3620	(2.25)							(2.25)
M	201	SS001250	3620	6,499.21						6,499.21	-
P	201	SS001250	3620	13,231.49							13,231.49
Q	201	SS001250	3620	(12.05)							(12.05)
M	201	SS001251	3620	6,499.21						6,499.21	-
P	201	SS001251	3620	13,231.49							13,231.49
Q	201	SS001251	3620	(12.05)							(12.05)
S	201	SS001251	3620	19.36							19.36
I	205	SS001251	3620	572.53							572.53
M	205	SS001251	3620	(286.27)						(286.27)	-
M	201	SS001252	3620	6,499.23						6,499.23	-
P	201	SS001252	3620	13,231.52							13,231.52
Q	201	SS001252	3620	(12.04)							(12.04)
M	205	SS001252	3620	286.27						286.27	-
M	201	SS001302	3620	(0.00)						(0.00)	-
P	201	SS001302	3620	(0.00)							(0.00)
M	201	SS001303	3620	(0.00)						(0.00)	-
P	201	SS001303	3620	(0.00)							(0.00)
I	501	SS001305	3620	(0.00)							(0.00)
M	501	SS001305	3620	(0.00)						(0.00)	-
M	201	SS001313	3620	(0.00)						(0.00)	-
P	201	SS001313	3620	(0.00)							(0.00)
M	201	SS001369	3620	(0.00)						(0.00)	-
P	201	SS001369	3620	(0.00)							(0.00)
M	201	SS001370	3620	(0.00)						(0.00)	-
P	201	SS001370	3620	(0.00)							(0.00)
M	201	SS001371	3620	(0.00)						(0.00)	-
P	201	SS001371	3620	(0.00)							(0.00)
M	201	SS001372	3620	(0.00)						(0.00)	-
P	201	SS001372	3620	(0.00)							(0.00)
M	201	SS001373	3620	(0.00)						(0.00)	-
P	201	SS001373	3620	(0.00)							(0.00)
M	201	SS001374	3620	(0.00)						(0.00)	-
P	201	SS001374	3620	(0.00)							(0.00)
M	201	SS001375	3620	425.72						425.72	-
P	201	SS001375	3620	2,595.84							2,595.84
M	201	SS001382	3620	334.74						334.74	-
P	201	SS001382	3620	2,041.10							2,041.10
M	201	SS001390	3620	(61,253.03)						(61,253.03)	-
P	201	SS001390	3620	84,282.11							84,282.11
Q	201	SS001390	3620	(220.99)							(220.99)
M	201	SS001392	3620	(47,143.04)						(47,143.04)	-
P	201	SS001392	3620	76,294.40							76,294.40
M	201	SS001576	3620	1,159.28						1,159.28	-
P	201	SS001576	3620	45,454.56							45,454.56
M	201	SS001593	3620	(0.00)						(0.00)	-
P	201	SS001593	3620	(0.00)							(0.00)
Q	201	SS001593	3620	-							-
M	201	SS001609	3620	(0.00)						(0.00)	-
P	201	SS001609	3620	(0.00)							(0.00)
M	201	SS001610	3620	(0.00)						(0.00)	-

Hawaii Electric Light Company, Inc.
State ITC (eligible cost types 2xx, 5xx; closed to plant)
For Year 2005

Jrl	Cd	EE	WO	Acct	Amount	ROW	S&I	land	auto limit (a)	interco billing	direct overheads	SITC basis
P		201	SS001610	3620	(0.00)							(0.00)
M		201	SS001634	3620	(0.00)						(0.00)	-
P		201	SS001634	3620	(0.00)							(0.00)
M		201	SS001637	3620	(0.00)						(0.00)	-
P		201	SS001637	3620	(0.00)							(0.00)
M		201	SS001726	3620	(0.00)						(0.00)	-
P		201	SS001726	3620	(0.00)							(0.00)
M		201	SS001736	3620	1,969.87						1,969.87	-
P		201	SS001736	3620	13,679.66							13,679.66
M		201	SS001781	3620	1,408.68						1,408.68	-
P		201	SS001781	3620	9,782.48							9,782.48
I		205	SS001781	3620	55.82							55.82
M		201	SS001797	3620	2,099.58						2,099.58	-
P		201	SS001797	3620	6,839.04							6,839.04
S		201	SS001797	3620	128.34							128.34
S		201	SS001807	3620	88.68							88.68
M		201	SS001811	3620	(0.00)						(0.00)	-
P		201	SS001811	3620	(0.00)							(0.00)
M		201	SS001812	3620	(0.00)						(0.00)	-
P		201	SS001812	3620	(0.00)							(0.00)
I		201	SS001823	3620	44,263.44							44,263.44
M		201	SS001823	3620	41,034.61						41,034.61	-
P		201	SS001823	3620	353,654.08							353,654.08
M		201	SS001828	3620	2,333.75						2,333.75	-
P		201	SS001828	3620	7,601.81							7,601.81
M		201	SS001830	3620	101.39						101.39	-
P		201	SS001830	3620	330.25							330.25
I		201	SS001867	3620	150.00							150.00
M		201	SS001867	3620	811.81						811.81	-
P		201	SS001867	3620	7,790.82							7,790.82
I		201	SS001868	3620	-							-
M		201	SS001868	3620	246.39						246.39	-
P		201	SS001868	3620	2,364.61							2,364.61
M		201	SS001869	3620	389.14						389.14	-
P		201	SS001869	3620	3,734.52							3,734.52
I		501	SS001872	3620	(0.00)							(0.00)
M		201	SS001907	3620	10,269.52						10,269.52	-
M		201	SS001909	3620	10,269.52						10,269.52	-
M		201	SS001910	3620	10,269.52						10,269.52	-
M		201	SS001911	3620	5,247.34						5,247.34	-
M		201	SS001912	3620	5,247.34						5,247.34	-
M		201	SS001917	3620	10,494.68						10,494.68	-
M		201	SS001918	3620	5,247.34						5,247.34	-
M		201	SS001919	3620	5,247.34						5,247.34	-
M		201	SS001920	3620	5,247.34						5,247.34	-
M		201	SS001921	3620	5,247.34						5,247.34	-
M		201	SS001924	3620	19,499.24						19,499.24	-
M		201	SS001925	3620	19,499.24						19,499.24	-
M		201	SS001926	3620	19,499.24						19,499.24	-
M		201	SS001927	3620	428.05						428.05	-
P		201	SS001927	3620	4,108.00							4,108.00
M		201	SS001949	3620	610.60						610.60	-
P		201	SS001949	3620	1,528.80							1,528.80
M		201	TD012167	3620	85.05						85.05	-
P		201	TD012167	3620	336.96							336.96
S		201	00000031 PW	3640	(61.24)							(61.24)
I		501	00000742 PW	3640	-							-
S		201	00000931 PW	3640	(0.00)							(0.00)
I		205	00001522 PW	3640	78.07							78.07
S		201	00002477 PW	3640	36.82							36.82
I		501	00002706 PW	3640	-							-
S		201	00003129 PW	3640	29.73							29.73
S		201	00003172 PW	3640	(33.94)							(33.94)
S		201	00003331 PW	3640	423.14							423.14
S		201	00003523 PW	3640	1,033.68							1,033.68
I		501	00003523 PW	3640	209.11							209.11
I		505	00003523 PW	3640	650.00							650.00
I		501	00004461 PW	3640	160.81							160.81
I		505	00004461 PW	3640	486.97							486.97

Hawaii Electric Light Company, Inc.
State ITC (eligible cost types 2xx, 5xx; closed to plant)
For Year 2005

Jnl Cd	EE	WO	Acct	Amount	ROW	S&I	land	auto limit (a)	interco billing	direct overheads	SITC basis
S	201	00004508 PW	3640	42.51							42.51
I	501	00004792 PW	3640	(0.00)							(0.00)
S	201	00004851 PW	3640	190.24							190.24
I	501	00004851 PW	3640	836.98							836.98
I	501	00004959 PW	3640	(152.34)							(152.34)
S	201	00005040 PW	3640	26.42							26.42
S	201	00005189 PW	3640	56.07							56.07
I	501	00005228 PW	3640	101.56							101.56
I	505	00005288 PW	3640	1,200.00							1,200.00
S	201	00005356 PW	3640	(63.59)							(63.59)
S	201	00005416 PW	3640	(0.00)							(0.00)
S	201	00005546 PW	3640	-							-
M	201	00005596 PW	3640	(0.00)						(0.00)	-
P	201	00005596 PW	3640	(0.00)							(0.00)
S	201	00005596 PW	3640	(0.00)							(0.00)
I	501	00005906 PW	3640	67.71							67.71
S	201	00006046 PW	3640	186.31							186.31
I	501	00006046 PW	3640	750.00							750.00
S	201	00006112 PW	3640	950.61							950.61
M	201	00006181 PW	3640	762.11						762.11	-
M	501	00006181 PW	3640	418.22						418.22	-
M	505	00006181 PW	3640	1,200.00						1,200.00	-
I	505	00006348 PW	3640	4,374.87							4,374.87
M	501	00006404 PW	3640	(1,016.30)						(1,016.30)	-
I	505	00006459 PW	3640	(439.73)							(439.73)
I	501	00006602 PW	3640	(1,749.99)							(1,749.99)
I	505	00006620 PW	3640	(693.00)							(693.00)
M	201	00006663 PW	3640	96.23						96.23	-
P	201	00006663 PW	3640	536.43							536.43
M	201	00006690 PW	3640	706.72						706.72	-
S	201	00006878 PW	3640	(142.34)							(142.34)
I	501	00006888 PW	3640	(0.00)							(0.00)
I	501	00007036 PW	3640	439.42							439.42
S	201	00007069 PW	3640	183.03							183.03
I	505	00007069 PW	3640	2,800.00							2,800.00
S	201	00007080 PW	3640	(0.00)							(0.00)
I	501	00007080 PW	3640	(0.00)							(0.00)
S	201	00007125 PW	3640	(692.31)							(692.31)
S	201	00007185 PW	3640	6.57							6.57
I	501	00007185 PW	3640	(0.00)							(0.00)
M	201	00007238 PW	3640	45.18						45.18	-
I	505	00007255 PW	3640	901.00							901.00
I	501	00007260 PW	3640	228.12							228.12
S	201	00007314 PW	3640	30.04							30.04
S	201	00007413 PW	3640	695.28							695.28
I	502	00007413 PW	3640	228.17							228.17
I	505	00007413 PW	3640	870.00							870.00
S	201	00007480 PW	3640	114.33							114.33
S	201	00007514 PW	3640	602.50							602.50
I	505	00007514 PW	3640	10,132.24							10,132.24
S	201	00007537 PW	3640	512.44							512.44
I	505	00007537 PW	3640	750.00							750.00
S	201	00007546 PW	3640	312.38							312.38
S	201	00007588 PW	3640	792.47							792.47
I	505	00007588 PW	3640	1,580.00							1,580.00
S	201	00007592 PW	3640	600.90							600.90
I	505	00007592 PW	3640	875.00							875.00
S	201	00007599 PW	3640	148.25							148.25
I	501	00007599 PW	3640	107.81							107.81
S	201	00007618 PW	3640	266.39							266.39
I	505	00007618 PW	3640	800.00							800.00
S	201	00007646 PW	3640	1,314.09							1,314.09
I	505	00007646 PW	3640	4,021.35							4,021.35
S	201	00007655 PW	3640	363.51							363.51
I	501	00007655 PW	3640	402.13							402.13
S	201	00007656 PW	3640	31.27							31.27
I	501	00007656 PW	3640	402.13							402.13
I	505	00007656 PW	3640	3,341.30							3,341.30
S	201	00007723 PW	3640	183.04							183.04

Hawaii Electric Light Company, Inc.
State ITC (eligible cost types 2xx, 5xx; closed to plant)
For Year 2005

Jnl Cd	EE	WO	Acct	Amount	ROW	S&I	land	auto limit (a)	interco billing	direct overheads	SITC basis
I	501	00007723 PW	3640	359.37							359.37
S	201	00007741 PW	3640	44.86							44.86
S	201	00007750 PW	3640	377.21							377.21
I	501	00007750 PW	3640	399.29							399.29
S	201	00007768 PW	3640	45.24							45.24
S	201	00007776 PW	3640	6,127.34							6,127.34
I	501	00007776 PW	3640	3,067.44							3,067.44
I	505	00007776 PW	3640	2,686.65							2,686.65
S	201	00007779 PW	3640	886.33							886.33
I	501	00007779 PW	3640	323.44							323.44
I	505	00007779 PW	3640	1,760.00							1,760.00
S	201	00007794 PW	3640	1,661.53							1,661.53
I	501	00007794 PW	3640	143.75							143.75
I	505	00007794 PW	3640	1,850.00							1,850.00
S	201	00007805 PW	3640	89.82							89.82
I	505	00007805 PW	3640	900.00							900.00
S	201	00007806 PW	3640	112.17							112.17
I	501	00007806 PW	3640	71.87							71.87
I	505	00007806 PW	3640	823.77							823.77
S	201	00007816 PW	3640	(32.17)							(32.17)
I	501	00007816 PW	3640	89.84							89.84
I	505	00007816 PW	3640	900.00							900.00
S	201	00007839 PW	3640	830.85							830.85
S	201	00007856 PW	3640	1,260.63							1,260.63
I	501	00007856 PW	3640	143.75							143.75
I	505	00007856 PW	3640	2,516.15							2,516.15
S	201	00007864 PW	3640	89.92							89.92
I	505	00007864 PW	3640	1,793.40							1,793.40
S	201	00007879 PW	3640	(0.00)							(0.00)
S	201	00007883 PW	3640	282.49							282.49
I	501	00007883 PW	3640	171.12							171.12
S	201	00007890 PW	3640	530.66							530.66
I	501	00007890 PW	3640	513.28							513.28
I	501	00007944 PW	3640	107.81							107.81
S	201	00007985 PW	3640	764.80							764.80
I	501	00007985 PW	3640	285.21							285.21
I	505	00007995 PW	3640	1,234.92							1,234.92
S	201	00008034 PW	3640	56.48							56.48
I	505	00008034 PW	3640	1,880.00							1,880.00
S	201	00008122 PW	3640	494.77							494.77
I	501	00008122 PW	3640	342.25							342.25
I	505	00008122 PW	3640	1,077.89							1,077.89
S	201	00008127 PW	3640	(0.00)							(0.00)
I	501	00008127 PW	3640	228.12							228.12
S	201	00008134 PW	3640	1,276.45							1,276.45
I	501	00008134 PW	3640	323.44							323.44
I	505	00008134 PW	3640	1,495.78							1,495.78
S	201	00008136 PW	3640	280.70							280.70
I	501	00008136 PW	3640	342.25							342.25
I	505	00008136 PW	3640	793.04							793.04
S	201	00008145 PW	3640	62.99							62.99
I	505	00008145 PW	3640	1,360.00							1,360.00
S	201	00008148 PW	3640	1,037.67							1,037.67
I	505	00008148 PW	3640	3,631.00							3,631.00
S	201	00008171 PW	3640	1,042.78							1,042.78
I	501	00008171 PW	3640	228.17							228.17
I	505	00008171 PW	3640	786.93							786.93
S	201	00008174 PW	3640	302.01							302.01
I	501	00008174 PW	3640	399.29							399.29
I	505	00008174 PW	3640	983.66							983.66
S	201	00008181 PW	3640	1,454.90							1,454.90
I	501	00008181 PW	3640	855.62							855.62
I	505	00008181 PW	3640	802.30							802.30
S	201	00008239 PW	3640	623.13							623.13
I	505	00008239 PW	3640	1,364.11							1,364.11
S	201	00008245 PW	3640	1,553.48							1,553.48
I	505	00008245 PW	3640	885.94							885.94
S	201	00008264 PW	3640	743.37							743.37
I	505	00008264 PW	3640	935.00							935.00

Hawaii Electric Light Company, Inc.
State ITC (eligible cost types 2xx, 5xx; closed to plant)
For Year 2005

Jnl Cd	EE	WO	Acct	Amount	ROW	S&I	land	auto limit (a)	interco billing	direct overheads	SITC basis
S	201	00008265 PW	3640	247.00							247.00
S	201	00008277 PW	3640	1,747.03							1,747.03
S	201	00008288 PW	3640	309.75							309.75
S	201	00008294 PW	3640	16.96							16.96
S	201	00008295 PW	3640	187.56							187.56
S	201	00008317 PW	3640	168.91							168.91
S	201	00008341 PW	3640	135.17							135.17
S	201	00008343 PW	3640	2,181.22							2,181.22
S	201	00008344 PW	3640	490.81							490.81
S	201	EE000402 PW	3640	1,759.76							1,759.76
I	501	EE000402 PW	3640	484.77							484.77
I	505	EE000402 PW	3640	4,712.00							4,712.00
S	201	EE000403 PW	3640	1,655.10							1,655.10
I	505	EE000403 PW	3640	1,850.00							1,850.00
S	201	EE000447 PW	3640	(0.00)							(0.00)
S	201	EE000448 PW	3640	1,672.72							1,672.72
I	501	EE000448 PW	3640	26,707.64							26,707.64
M	201	EE000479 PW	3640	1,365.91						1,365.91	-
P	201	EE000479 PW	3640	7,656.48							7,656.48
S	201	EE000479 PW	3640	1,866.05							1,866.05
I	501	EE000479 PW	3640	900.00							900.00
I	505	EE000479 PW	3640	18,900.15							18,900.15
S	201	EE000556 PW	3640	2,183.50							2,183.50
I	505	EE000556 PW	3640	34,015.96							34,015.96
I	505	EE000569 PW	3640	351.70							351.70
S	201	EE000581 PW	3640	170.72							170.72
I	501	EE000581 PW	3640	1,400.00							1,400.00
I	505	EE000581 PW	3640	4,070.00							4,070.00
S	201	EE000628 PW	3640	72.43							72.43
I	505	EE000628 PW	3640	850.00							850.00
I	501	EE000644 PW	3640	171.09							171.09
S	201	EE000652 PW	3640	380.82							380.82
I	501	EE000652 PW	3640	513.37							513.37
I	505	EE000652 PW	3640	2,700.00							2,700.00
S	201	EE000653 PW	3640	3,708.29							3,708.29
I	501	EE000653 PW	3640	427.74							427.74
I	505	EE000653 PW	3640	12,225.44							12,225.44
S	201	EE000661 PW	3640	101.56							101.56
I	505	EE000661 PW	3640	3,434.00							3,434.00
S	201	EE000665 PW	3640	53.90							53.90
I	501	EE000665 PW	3640	971.87							971.87
S	201	EE000671 PW	3640	581.30							581.30
I	501	EE000671 PW	3640	431.25							431.25
I	505	EE000671 PW	3640	1,523.83							1,523.83
S	201	EE000679 PW	3640	980.24							980.24
I	501	EE000679 PW	3640	1,800.00							1,800.00
S	201	EE000681 PW	3640	(14.74)							(14.74)
I	501	EE000681 PW	3640	900.00							900.00
S	201	EE000685 PW	3640	3,610.72							3,610.72
I	505	EE000685 PW	3640	2,424.84							2,424.84
S	201	EE000693 PW	3640	3,718.62							3,718.62
I	505	EE000693 PW	3640	19,559.27							19,559.27
S	201	EE000699 PW	3640	310.92							310.92
I	505	EE000699 PW	3640	1,050.00							1,050.00
S	201	EE000700 PW	3640	1,542.36							1,542.36
I	505	EE000700 PW	3640	2,000.00							2,000.00
S	201	EE000701 PW	3640	1,698.25							1,698.25
I	505	EE000701 PW	3640	11,427.00							11,427.00
S	201	EE000702 PW	3640	8,189.28							8,189.28
I	505	EE000702 PW	3640	68,495.82							68,495.82
S	201	EE000717 PW	3640	667.92							667.92
I	501	EE000717 PW	3640	71.87							71.87
I	505	EE000717 PW	3640	743.71							743.71
S	201	EE000723 PW	3640	892.29							892.29
I	501	EE000723 PW	3640	793.75							793.75
S	201	EE000725 PW	3640	1,074.35							1,074.35
I	505	EE000725 PW	3640	18,010.79							18,010.79
S	201	EE000726 PW	3640	3,848.02							3,848.02
I	505	EE000726 PW	3640	42,594.96							42,594.96

Hawaii Electric Light Company, Inc.
State ITC (eligible cost types 2xx, 5xx; closed to plant)
For Year 2005

Inf Od	EE	WO	Acct	Amount	ROW	S&I	land	auto limit (a)	interco billing	direct overheads	SITC basis
S	201	EE000736 PW	3640	882.92							882.92
I	505	EE000736 PW	3640	4,460.00							4,460.00
S	201	EE000738 PW	3640	53.90							53.90
I	505	EE000738 PW	3640	1,408.00							1,408.00
S	201	EE000748 PW	3640	1,105.79							1,105.79
I	501	EE000748 PW	3640	107.81							107.81
I	505	EE000748 PW	3640	814.43							814.43
S	201	EE000769 PW	3640	472.72							472.72
I	505	EE000769 PW	3640	1,200.00							1,200.00
S	201	EE000774 PW	3640	2,098.60							2,098.60
I	501	EE000774 PW	3640	152.08							152.08
I	505	EE000774 PW	3640	1,100.00							1,100.00
S	201	EE000780 PW	3640	761.98							761.98
I	505	EE000780 PW	3640	4,677.00							4,677.00
S	201	EE000786 PW	3640	370.43							370.43
I	505	EE000786 PW	3640	2,116.12							2,116.12
S	201	EE000787 PW	3640	-							-
I	501	EE000787 PW	3640	(0.00)							(0.00)
S	201	EE000789 PW	3640	67.52							67.52
I	505	EE000789 PW	3640	1,180.00							1,180.00
S	201	EE000790 PW	3640	108.75							108.75
I	505	EE000790 PW	3640	15,331.91							15,331.91
S	201	EE000791 PW	3640	301.55							301.55
I	505	EE000791 PW	3640	3,414.00							3,414.00
S	201	EE000804 PW	3640	451.86							451.88
I	505	EE000804 PW	3640	3,433.73							3,433.73
S	201	EE000814 PW	3640	784.61							784.61
I	505	EE000814 PW	3640	12,597.22							12,597.22
S	201	EE000815 PW	3640	1,345.65							1,345.65
I	505	EE000815 PW	3640	15,584.03							15,584.03
I	505	EE000820 PW	3640	1,520.00							1,520.00
S	201	EE000821 PW	3640	2,631.46							2,631.46
I	505	EE000821 PW	3640	14,363.08							14,363.08
S	201	EE000829 PW	3640	82.82							82.82
I	505	EE000829 PW	3640	2,363.31							2,363.31
S	201	EE000831 PW	3640	1,148.35							1,148.35
I	505	EE000831 PW	3640	2,165.00							2,165.00
S	201	EE000834 PW	3640	1,308.51							1,308.51
I	505	EE000834 PW	3640	4,260.00							4,260.00
S	201	EE000836 PW	3640	-							-
I	505	EE000836 PW	3640	13,806.68							13,806.68
S	201	EE000839 PW	3640	214.88							214.88
I	505	EE000839 PW	3640	4,472.93							4,472.93
S	201	EE000840 PW	3640	303.90							303.90
I	505	EE000840 PW	3640	3,330.00							3,330.00
S	201	EE000849 PW	3640	4,554.37							4,554.37
I	501	EE000849 PW	3640	2,975.00							2,975.00
I	505	EE000849 PW	3640	13,468.02							13,468.02
S	201	EE000852 PW	3640	62.99							62.99
I	505	EE000852 PW	3640	1,600.00							1,600.00
S	201	EE000853 PW	3640	296.69							296.69
I	505	EE000853 PW	3640	1,250.00							1,250.00
S	201	EE000855 PW	3640	994.34							994.34
I	505	EE000855 PW	3640	4,060.18							4,060.18
S	201	EE000859 PW	3640	1,842.43							1,842.43
I	505	EE000859 PW	3640	11,117.46							11,117.46
S	201	EE000865 PW	3640	450.39							450.39
I	505	EE000865 PW	3640	1,056.00							1,056.00
I	505	EE000866 PW	3640	2,960.00							2,960.00
S	201	EE000879 PW	3640	408.72							408.72
I	505	EE000879 PW	3640	1,895.92							1,895.92
I	505	EE005294	3640	33,854.06							33,854.06
I	505	EE005295	3640	5,626.92							5,626.92
I	505	EE005296	3640	3,910.79							3,910.79
I	501	EE017826	3640	(500.00)							(500.00)
S	201	EE037674	3640	17.14							17.14
S	201	EE040312	3640	17.14							17.14
S	201	EE045759	3640	1,713.22							1,713.22
I	505	EE045759	3640	5,896.00							5,896.00

Hawaii Electric Light Company, Inc.
State ITC (eligible cost types 2xx, 5xx; closed to plant)
For Year 2005

Jrl Cd	EE	WO	Acct	Amount	ROW	S&I	land	auto limit (a)	interco billing	direct overheads	SITC basis
I	505	EE051184	3640	1,200.00							1,200.00
I	205	EE051633	3640	(0.00)							(0.00)
S	201	EE051943	3640	284.48							284.48
I	505	EE051943	3640	630.00							630.00
S	201	EE053166	3640	84.66							84.66
S	201	EE054151	3640	(1,891.91)							(1,891.91)
I	501	EE055213	3640	89.84							89.84
I	505	EE055213	3640	600.00							600.00
I	505	EE055526	3640	2,651.00							2,651.00
S	201	EE056409	3640	902.26							902.26
I	505	EE057223	3640	538.83							538.83
S	201	EE057345	3640	326.95							326.95
I	505	EE057345	3640	1,449.00							1,449.00
I	501	EE057486	3640	114.06							114.06
I	501	EE058185	3640	161.72							161.72
S	201	EE058194	3640	529.93							529.93
I	505	EE058194	3640	1,430.00							1,430.00
I	505	EE058224	3640	600.00							600.00
S	201	EE058243	3640	1,915.49							1,915.49
I	505	EE058243	3640	38,954.58							38,954.58
I	505	EE058500	3640	9,625.00							9,625.00
S	201	EE058641	3640	284.40							284.40
I	501	EE058641	3640	71.87							71.87
I	505	EE058641	3640	538.83							538.83
S	201	EE058968	3640	790.61							790.61
I	501	EE058968	3640	89.84							89.84
I	505	EE058968	3640	950.00							950.00
I	501	EE059346	3640	71.87							71.87
I	505	EE059346	3640	600.00							600.00
I	501	EE059523	3640	179.69							179.69
S	201	EE059680	3640	3,830.64							3,830.64
I	505	EE059680	3640	13,704.87							13,704.87
I	505	EE059916	3640	1,200.00							1,200.00
S	201	EE060592	3640	1,813.25							1,813.25
I	501	EE060592	3640	143.75							143.75
I	505	EE060592	3640	3,050.00							3,050.00
S	201	EE060593	3640	284.40							284.40
I	501	EE060593	3640	107.81							107.81
I	505	EE060593	3640	538.83							538.83
S	201	EE060602	3640	452.03							452.03
I	505	EE060602	3640	1,400.00							1,400.00
S	201	EE060696	3640	(736.81)							(736.81)
S	201	EE060754	3640	5,649.71							5,649.71
I	505	EE060754	3640	1,824.59							1,824.59
S	201	EE062341	3640	124.55							124.55
S	201	EE062379	3640	46.92							46.92
I	501	EE062384	3640	675.00							675.00
S	201	EE062399	3640	655.64							655.64
I	501	EE062399	3640	251.56							251.56
I	505	EE062399	3640	1,800.00							1,800.00
S	201	EE062444	3640	284.53							284.53
I	501	EE062444	3640	454.76							454.76
S	201	EE062529	3640	1,414.31							1,414.31
I	501	EE062529	3640	1,221.87							1,221.87
S	201	EE062547	3640	284.48							284.48
I	501	EE062547	3640	71.87							71.87
I	505	EE062547	3640	500.00							500.00
S	201	EE062809	3640	290.30							290.30
I	505	EE062809	3640	1,375.00							1,375.00
S	201	EE063027	3640	3,766.42							3,766.42
I	501	EE063027	3640	251.56							251.56
I	505	EE063027	3640	718.44							718.44
S	201	EE063674	3640	3,424.55							3,424.55
I	501	EE063674	3640	134.77							134.77
I	505	EE063674	3640	4,250.00							4,250.00
S	201	EE063705	3640	572.79							572.79
I	501	EE063705	3640	1,567.38							1,567.38
S	201	EE063834	3640	299.71							299.71
I	501	EE063834	3640	2,861.77							2,861.77

Hawaii Electric Light Company, Inc.
State ITC (eligible cost types 2xx, 5xx; closed to plant)
For Year 2005

Jnl Cd	EE	WO	Acct	Amount	ROW	S&I	land	auto limit (a)	interco billing	direct overheads	SITC basis
S	201	EE063892	3640	341.94							341.94
I	505	EE063892	3640	3,676.48							3,676.48
S	201	EE064093	3640	883.23							883.23
I	501	EE064093	3640	1,500.00							1,500.00
I	505	EE064093	3640	1,480.00							1,480.00
S	201	EE064345	3640	891.17							891.17
I	501	EE064345	3640	1,693.75							1,693.75
S	201	EE064566	3640	266.41							266.41
I	501	EE064566	3640	107.81							107.81
I	505	EE064566	3640	269.42							269.42
S	201	EE064925	3640	1,747.67							1,747.67
I	501	EE064925	3640	3,450.00							3,450.00
S	201	EE064947	3640	3,705.58							3,705.58
I	501	EE064947	3640	6,957.81							6,957.81
S	201	EE065040	3640	3,866.91							3,866.91
I	501	EE065040	3640	251.56							251.56
I	505	EE065040	3640	4,550.00							4,550.00
S	201	EE065116	3640	266.41							266.41
I	505	EE065116	3640	958.00							958.00
S	201	EE065194	3640	266.42							266.42
I	505	EE065194	3640	750.00							750.00
S	201	EE065881	3640	284.48							284.48
I	501	EE065881	3640	772.39							772.39
S	201	EE066812	3640	2,428.42							2,428.42
I	501	EE066812	3640	143.75							143.75
I	505	EE066812	3640	1,800.00							1,800.00
S	201	EE066840	3640	350.35							350.35
I	505	EE066840	3640	2,385.00							2,385.00
S	201	EE067237	3640	532.81							532.81
I	501	EE067237	3640	71.87							71.87
I	505	EE067237	3640	1,000.00							1,000.00
S	201	EE067308	3640	1,342.96							1,342.96
I	501	EE067308	3640	107.81							107.81
I	505	EE067308	3640	1,800.00							1,800.00
S	201	EE067603	3640	812.30							812.30
I	501	EE067603	3640	1,649.06							1,649.06
S	201	EE067684	3640	3,247.00							3,247.00
I	501	EE067684	3640	143.75							143.75
I	505	EE067684	3640	2,127.83							2,127.83
S	201	EE067914	3640	989.56							989.56
I	501	EE067914	3640	3,643.75							3,643.75
S	201	EE067957	3640	614.71							614.71
I	501	EE067957	3640	1,441.60							1,441.60
S	201	EE067967	3640	365.29							365.29
I	501	EE067967	3640	823.77							823.77
S	201	EE067980	3640	3,597.83							3,597.83
I	501	EE067980	3640	197.65							197.65
I	505	EE067980	3640	6,750.00							6,750.00
S	201	EE068140	3640	266.42							266.42
I	501	EE068140	3640	571.87							571.87
S	201	EE068464	3640	365.94							365.94
I	505	EE068464	3640	3,168.61							3,168.61
S	201	EE068548	3640	855.81							855.81
I	505	EE068548	3640	6,875.00							6,875.00
S	201	EE068601	3640	308.73							308.73
I	505	EE068601	3640	1,764.00							1,764.00
S	201	EE068653	3640	510.09							510.09
I	501	EE068653	3640	1,029.71							1,029.71
S	201	EE068662	3640	3,106.29							3,106.29
I	501	EE068662	3640	269.53							269.53
I	505	EE068662	3640	2,050.00							2,050.00
S	201	EE068683	3640	266.42							266.42
I	501	EE068683	3640	35.94							35.94
I	505	EE068683	3640	823.77							823.77
S	201	EE068983	3640	266.41							266.41
I	505	EE068983	3640	650.00							650.00
S	201	EE069038	3640	739.49							739.49
I	505	EE069038	3640	1,700.00							1,700.00
S	201	EE069348	3640	479.96							479.96

Hawaii Electric Light Company, Inc.
State ITC (eligible cost types 2xx, 5xx; closed to plant)
For Year 2005

Jnl Cd	EE	WO	Acct	Amount	ROW	S&I	land	auto limit (a)	interco billing	direct overheads	SITC basis
I	501	EE069348	3640	71.87							71.87
I	505	EE069348	3640	720.80							720.80
S	201	EE069376	3640	515.95							515.95
I	501	EE069376	3640	114.06							114.06
I	505	EE069376	3640	1,800.00							1,800.00
S	201	EE069399	3640	266.42							266.42
I	505	EE069399	3640	568.40							568.40
S	201	EE069601	3640	266.42							266.42
I	501	EE069601	3640	71.87							71.87
I	505	EE069601	3640	568.40							568.40
S	201	EE069753	3640	266.42							266.42
I	505	EE069753	3640	2,270.65							2,270.65
S	201	EE069766	3640	134.32							134.32
I	505	EE069766	3640	1,480.00							1,480.00
S	201	EE069921	3640	266.42							266.42
I	501	EE069921	3640	71.87							71.87
I	505	EE069921	3640	772.28							772.28
S	201	EE069967	3640	1,597.11							1,597.11
I	501	EE069967	3640	251.56							251.56
I	505	EE069967	3640	3,400.00							3,400.00
S	201	EE069985	3640	431.89							431.89
S	201	EE070003	3640	708.02							708.02
I	505	EE070003	3640	2,240.00							2,240.00
S	201	EE070062	3640	2,740.39							2,740.39
I	501	EE070062	3640	269.53							269.53
I	505	EE070062	3640	2,600.00							2,600.00
S	201	EE070138	3640	638.60							638.60
I	501	EE070138	3640	4,992.85							4,992.85
S	201	EE070349	3640	1,180.07							1,180.07
I	505	EE070349	3640	4,247.30							4,247.30
S	201	EE070414	3640	266.42							266.42
I	501	EE070414	3640	635.94							635.94
S	201	EE070549	3640	3,846.11							3,846.11
I	501	EE070549	3640	377.34							377.34
I	505	EE070549	3640	1,240.00							1,240.00
S	201	EE070613	3640	321.41							321.41
I	505	EE070613	3640	1,250.00							1,250.00
S	201	EE070620	3640	2,828.97							2,828.97
I	501	EE070620	3640	287.50							287.50
I	505	EE070620	3640	1,500.17							1,500.17
S	201	EE070997	3640	1,670.32							1,670.32
I	501	EE070997	3640	197.65							197.65
I	505	EE070997	3640	3,200.00							3,200.00
I	501	EE071015	3640	2,972.38							2,972.38
S	201	EE071056	3640	266.42							266.42
I	501	EE071056	3640	71.87							71.87
I	505	EE071056	3640	823.77							823.77
S	201	EE071212	3640	2,077.76							2,077.76
I	501	EE071212	3640	179.69							179.69
I	505	EE071212	3640	3,850.00							3,850.00
S	201	EE071494	3640	4,863.21							4,863.21
I	505	EE071494	3640	24,874.57							24,874.57
S	201	EE071574	3640	2,919.03							2,919.03
I	205	EE071574	3640	62.86							62.86
I	505	EE071574	3640	16,211.67							16,211.67
S	201	EE071759	3640	389.50							389.50
I	505	EE071759	3640	1,200.00							1,200.00
S	201	EE071784	3640	426.90							426.90
I	501	EE071784	3640	1,314.08							1,314.08
S	201	EE071858	3640	266.42							266.42
I	501	EE071858	3640	4,938.94							4,938.94
S	201	EE072114	3640	1,036.10							1,036.10
S	201	EE072120	3640	266.42							266.42
S	201	EE072175	3640	2,825.70							2,825.70
I	505	EE072175	3640	7,617.68							7,617.68
S	201	EE072177	3640	266.42							266.42
I	501	EE072177	3640	5,010.81							5,010.81
S	201	EE072455	3640	266.42							266.42
I	501	EE072455	3640	964.06							964.06
S	201	EE072523	3640	266.42							266.42

Hawaii Electric Light Company, Inc.
State ITC (eligible cost types 2xx, 5xx; closed to plant)
For Year 2005

Uni Cd	EE	WO	Acct	Amount	ROW	S&I	land	auto limit (a)	interco billing	direct overheads	S/TC basis
I	501	EE072523	3640	89.84							89.84
I	505	EE072523	3640	458.17							458.17
S	201	EE072586	3640	49.70							49.70
S	201	EE072616	3640	266.42							266.42
I	501	EE072616	3640	89.84							89.84
I	505	EE072616	3640	1,030.88							1,030.88
S	201	EE072692	3640	1,585.25							1,585.25
I	501	EE072692	3640	215.62							215.62
I	505	EE072692	3640	3,100.00							3,100.00
S	201	EE072703	3640	49.70							49.70
S	201	EE072873	3640	283.05							283.05
I	501	EE072873	3640	107.81							107.81
I	505	EE072873	3640	411.89							411.89
S	201	EE072914	3640	4,417.11							4,417.11
I	501	EE072914	3640	215.62							215.62
I	505	EE072914	3640	6,575.00							6,575.00
S	201	EE073113	3640	79.43							79.43
S	201	EE073137	3640	291.58							291.58
I	505	EE073137	3640	2,090.08							2,090.08
S	201	EE073228	3640	3,093.69							3,093.69
I	501	EE073228	3640	179.69							179.69
I	505	EE073228	3640	1,150.00							1,150.00
S	201	EE073466	3640	-							-
I	505	EE073466	3640	950.00							950.00
S	201	EE073467	3640	331.80							331.80
I	505	EE073467	3640	1,220.00							1,220.00
S	201	EE073532	3640	664.35							664.35
I	501	EE073532	3640	179.69							179.69
I	505	EE073532	3640	1,250.00							1,250.00
S	201	EE073574	3640	1,092.86							1,092.86
I	501	EE073574	3640	89.84							89.84
I	505	EE073574	3640	3,450.00							3,450.00
S	201	EE073652	3640	4,900.49							4,900.49
I	501	EE073652	3640	233.59							233.59
I	505	EE073652	3640	1,863.28							1,863.28
S	201	EE073704	3640	308.86							308.86
I	501	EE073704	3640	71.87							71.87
I	505	EE073704	3640	1,000.00							1,000.00
S	201	EE073743	3640	561.51							561.51
I	501	EE073743	3640	251.56							251.56
I	505	EE073743	3640	308.91							308.91
M	201	EE073828	3640	9.34						9.34	-
P	201	EE073828	3640	89.68							89.88
S	201	EE073828	3640	4,168.50							4,168.50
I	501	EE073828	3640	610.94							610.94
I	505	EE073828	3640	4,000.00							4,000.00
S	201	EE073834	3640	283.88							283.88
I	505	EE073834	3640	1,373.00							1,373.00
S	201	EE073942	3640	308.86							308.86
I	501	EE073942	3640	71.87							71.87
I	505	EE073942	3640	1,000.00							1,000.00
S	201	EE073949	3640	6,432.67							6,432.67
I	501	EE073949	3640	449.21							449.21
I	505	EE073949	3640	8,400.00							8,400.00
S	201	EE073974	3640	266.42							266.42
I	501	EE073974	3640	143.75							143.75
I	505	EE073974	3640	600.00							600.00
S	201	EE074293	3640	509.93							509.93
I	501	EE074293	3640	1,514.08							1,514.08
S	201	EE074304	3640	2,408.34							2,408.34
I	505	EE074304	3640	8,244.19							8,244.19
S	201	EE074328	3640	1,813.14							1,813.14
I	505	EE074328	3640	17,912.65							17,912.65
S	201	EE074350	3640	301.32							301.32
S	201	EE074503	3640	266.42							266.42
I	501	EE074503	3640	993.75							993.75
S	201	EE074513	3640	1,283.84							1,283.84
I	505	EE074513	3640	18,451.01							18,451.01
S	201	EE074528	3640	1,399.13							1,399.13
I	505	EE074528	3640	6,367.33							6,367.33

Hawaii Electric Light Company, Inc.
State ITC (eligible cost types 2xx, 5xx; closed to plant)
For Year 2005

Jnl Cd	EE	WO	Acct	Amount	ROW	S&I	land	auto limit (a)	interco billing	direct overheads	SITC basis
S	201	EE074562	3640	702.51							702.51
I	505	EE074562	3640	2,475.65							2,475.65
S	201	EE074710	3640	424.59							424.59
I	505	EE074710	3640	1,200.00							1,200.00
S	201	EE074837	3640	502.52							502.52
S	201	EE075208	3640	3,307.86							3,307.86
I	505	EE075208	3640	1,785.00							1,785.00
S	201	EE075518	3640	1,263.84							1,263.84
I	501	EE075518	3640	143.75							143.75
I	505	EE075518	3640	1,570.00							1,570.00
S	201	EE075615	3640	450.35							450.35
S	201	EE075633	3640	760.82							760.82
I	505	EE075633	3640	996.24							996.24
S	201	EE075775	3640	2,118.54							2,118.54
S	201	EE075914	3640	508.22							508.22
I	501	EE075914	3640	1,207.81							1,207.81
S	201	EE076061	3640	1,197.24							1,197.24
S	201	EE076065	3640	291.41							291.41
I	505	EE076065	3640	481.05							481.05
S	201	EE076239	3640	2,148.09							2,148.09
I	505	EE076239	3640	709.00							709.00
S	201	EE076391	3640	2,569.47							2,569.47
I	501	EE076391	3640	5,450.00							5,450.00
S	201	EE076589	3640	566.08							566.08
I	501	EE076589	3640	215.62							215.62
I	505	EE076589	3640	908.64							908.64
S	201	EE076806	3640	31.50							31.50
I	505	EE076806	3640	1,910.00							1,910.00
S	201	EE076997	3640	377.01							377.01
S	201	EE077002	3640	906.49							906.49
I	505	EE077002	3640	8,761.67							8,761.67
S	201	EE077030	3640	-							-
S	201	EE077601	3640	448.26							448.26
I	501	EE077601	3640	1,100.00							1,100.00
S	201	EE077725	3640	385.55							385.55
S	201	EE077945	3640	389.50							389.50
I	501	EE077945	3640	600.00							600.00
S	201	EE077982	3640	424.59							424.59
S	201	EE078270	3640	1,523.36							1,523.36
S	201	EE078494	3640	54.34							54.34
S	201	EE078519	3640	194.99							194.99
S	201	EE078949	3640	4,582.13							4,582.13
S	201	H0000633	3640	(663.69)							(663.69)
S	201	H0000723	3640	-							-
M	201	H0000958	3640	287.10						287.10	-
P	201	H0000958	3640	1,609.27							1,609.27
S	201	H0000958	3640	14,507.59							14,507.59
I	501	H0000958	3640	67.71							67.71
I	505	H0000958	3640	13,689.19							13,689.19
S	201	H0001009	3640	3,820.63							3,820.63
I	205	H0001009	3640	12.86							12.86
I	505	H0001009	3640	4,000.00							4,000.00
S	201	H0001012	3640	7,351.53							7,351.53
I	205	H0001012	3640	5.25							5.25
I	501	H0001012	3640	26,127.43							26,127.43
I	505	H0001012	3640	9,350.00							9,350.00
S	201	H0001015	3640	8,348.95							8,348.95
I	501	H0001015	3640	1,271.09							1,271.09
S	201	H0001055	3640	283.47							283.47
S	201	H0001061	3640	64,892.85							64,892.85
I	205	H0001061	3640	168.12							168.12
I	501	H0001061	3640	41,320.15							41,320.15
I	501	H0001060	3640	143.75							143.75
I	501	H0001088	3640	220.05							220.05
S	201	H0001089	3640	2,124.86							2,124.86
I	505	H0001089	3640	7,875.00							7,875.00
S	201	H0001098	3640	4,477.56							4,477.56
I	205	H0001098	3640	318.91							318.91
I	501	H0001098	3640	332.69							332.69
I	505	H0001098	3640	5,200.00							5,200.00

Hawaii Electric Light Company, Inc.
State ITC (eligible cost types 2xx, 5xx; closed to plant)
For Year 2005

Jnl Cd	EE	WO	Acct	Amount	ROW	S&I	land	auto limit (a)	interco billing	direct overheads	SITC basis
I	501	H0001114	3640	808.59							808.59
S	201	H0001119	3640	16,714.48							16,714.48
I	501	H0001119	3640	22,421.77							22,421.77
I	505	H0001124	3640	9,500.00							9,500.00
S	201	H0001127	3640	1,004.04							1,004.04
I	501	H0001127	3640	152.08							152.08
I	505	H0001127	3640	2,900.00							2,900.00
S	201	H0001133	3640	17,199.19							17,199.19
I	501	H0001133	3640	1,038.91							1,038.91
I	505	H0001133	3640	8,500.00							8,500.00
S	201	H0001138	3640	1,840.90							1,840.90
I	501	H0001138	3640	1,950.00							1,950.00
S	201	H0001236	3640	3,197.48							3,197.48
I	505	H0001236	3640	18,076.18							18,076.18
S	201	H0001238	3640	2,639.96							2,639.96
I	505	H0001238	3640	27,714.04							27,714.04
S	201	H0001239	3640	9,420.71							9,420.71
I	505	H0001239	3640	26,359.21							26,359.21
S	201	H0001240	3640	3,995.05							3,995.05
I	505	H0001240	3640	26,752.42							26,752.42
S	201	H0001241	3640	2,287.22							2,287.22
I	501	H0001241	3640	143.75							143.75
I	505	H0001241	3640	2,450.00							2,450.00
S	201	H0001243	3640	28,112.25							28,112.25
I	505	H0001243	3640	1,307.06							1,307.06
S	201	H0001245	3640	6,884.96							6,884.96
I	505	H0001245	3640	23,189.36							23,189.36
S	201	H0001246	3640	3,953.03							3,953.03
I	505	H0001248	3640	6,289.92							6,289.92
S	201	H0001250	3640	1,600.26							1,600.26
I	505	H0001250	3640	2,621.00							2,621.00
S	201	H0001260	3640	3,854.73							3,854.73
I	501	H0001260	3640	3,450.00							3,450.00
S	201	H0001261	3640	2,037.06							2,037.06
S	201	H0001268	3640	3,078.87							3,078.87
I	505	H0001268	3640	10,800.00							10,800.00
S	201	H0001273	3640	5,693.34							5,693.34
M	501	H0001273	3640	9,301.44						9,301.44	-
I	505	H0001273	3640	29,568.50							29,568.50
S	201	H0001276	3640	3,021.74							3,021.74
M	501	H0001276	3640	(0.00)						(0.00)	-
I	505	H0001276	3640	20,985.00							20,985.00
S	201	H0001277	3640	2,034.90							2,034.90
I	501	H0001277	3640	152.08							152.08
I	505	H0001277	3640	4,400.00							4,400.00
S	201	H0001278	3640	3,287.35							3,287.35
I	501	H0001278	3640	269.53							269.53
I	505	H0001278	3640	3,650.00							3,650.00
S	201	H0001280	3640	3,716.66							3,716.66
I	501	H0001280	3640	27,923.11							27,923.11
I	505	H0001280	3640	21,037.71							21,037.71
S	201	H0001281	3640	991.91							991.91
I	501	H0001281	3640	8,917.15							8,917.15
S	201	H0001283	3640	47,593.23							47,593.23
I	501	H0001283	3640	1,401.55							1,401.55
I	505	H0001283	3640	49,262.50							49,262.50
S	201	H0001285	3640	7,175.61							7,175.61
I	501	H0001285	3640	305.47							305.47
I	505	H0001285	3640	7,850.00							7,850.00
S	201	H0001286	3640	14,805.38							14,805.38
I	205	H0001286	3640	208.23							208.23
I	501	H0001286	3640	413.28							413.28
I	505	H0001286	3640	18,896.01							18,896.01
M	505	H0001286	3640	(0.00)						(0.00)	-
S	201	H0001287	3640	11,012.66							11,012.66
I	501	H0001287	3640	179.69							179.69
I	505	H0001287	3640	9,167.00							9,167.00
S	201	H0001293	3640	4,331.33							4,331.33
I	505	H0001293	3640	42,778.08							42,778.08
S	201	H0001295	3640	4,759.13							4,759.13
I	501	H0001295	3640	215.62							215.62

Hawaii Electric Light Company, Inc.
State ITC (eligible cost types 2xx, 5xx; closed to plant)
For Year 2005

Jnl Cd	EE	WO	Acct	Amount	ROW	S&I	land	auto limit (a)	interco billing	direct overheads	SITC basis
I	505	H0001295	3640	7,869.71							7,869.71
S	201	H0001300	3640	15,874.60							15,874.60
I	505	H0001300	3640	16,750.00							16,750.00
S	201	H0001302	3640	2,033.57							2,033.57
I	505	H0001302	3640	6,294.00							6,294.00
S	201	H0001303	3640	3,112.38							3,112.38
I	505	H0001303	3640	6,900.00							6,900.00
S	201	H0001305	3640	4,720.25							4,720.25
I	505	H0001305	3640	91,949.50							91,949.50
S	201	H0001307	3640	4,014.43							4,014.43
I	505	H0001307	3640	5,053.09							5,053.09
S	201	H0001312	3640	1,551.60							1,551.60
S	201	H0001321	3640	2,509.49							2,509.49
I	501	H0001321	3640	164.90							164.90
I	505	H0001321	3640	6,275.00							6,275.00
I	521	H0001321	3640	130.69							130.69
S	201	H0001322	3640	1,362.97							1,362.97
I	501	H0001322	3640	164.90							164.90
I	505	H0001322	3640	4,630.00							4,630.00
I	521	H0001322	3640	130.69							130.69
S	201	H0001325	3640	2,838.86							2,838.86
I	501	H0001325	3640	164.90							164.90
I	505	H0001325	3640	8,346.00							8,346.00
I	521	H0001325	3640	130.62							130.62
S	201	H0001326	3640	2,977.36							2,977.36
I	501	H0001326	3640	164.90							164.90
I	505	H0001326	3640	6,146.00							6,146.00
I	521	H0001326	3640	130.62							130.62
S	201	H0001341	3640	6,804.84							6,804.84
M	201	H0008286 PW	3640	36,329.41						36,329.41	-
P	201	H0008286 PW	3640	348,650.85							348,650.85
S	201	H0008286 PW	3640	62,608.80							62,608.80
I	501	H0008286 PW	3640	86.43							86.43
I	505	H0008286 PW	3640	1,016,570.59							1,016,570.59
M	505	H0008286 PW	3640	545.28						545.28	-
P	505	H0008286 PW	3640	5,233.00							5,233.00
Q	505	H0008286 PW	3640	(3,924.75)							(3,924.75)
I	521	H0008286 PW	3640	17.56							17.56
I	550	H0008286 PW	3640	146,815.93					146,815.93		-
M	550	H0008286 PW	3640	287.25						287.25	-
S	201	H0009584 PW	3640	7,433.08							7,433.08
I	505	H0009584 PW	3640	30,830.44							30,830.44
I	501	H0010955 PW	3640	215.62							215.62
S	201	H0011672 PW	3640	512.44							512.44
I	505	H0011672 PW	3640	750.00							750.00
S	201	H0011990 PW	3640	169.33							169.33
S	201	H0014338 PW	3640	2,612.24							2,612.24
I	501	H0014338 PW	3640	494.27							494.27
I	505	H0014338 PW	3640	5,323.00							5,323.00
S	201	H0014683 PW	3640	(0.00)							(0.00)
I	205	H0014683 PW	3640	(0.00)							(0.00)
S	201	H0015005 PW	3640	3,861.56							3,861.56
I	505	H0015005 PW	3640	38,173.00							38,173.00
S	201	H0015141 PW	3640	84.66							84.66
I	501	H0015288 PW	3640	107.81							107.81
I	505	H0015288 PW	3640	627.73							627.73
S	201	H0015348 PW	3640	3,570.91							3,570.91
I	505	H0015348 PW	3640	9,753.73							9,753.73
S	201	H0015698 PW	3640	3,250.40							3,250.40
I	505	H0015698 PW	3640	11,474.93							11,474.93
S	201	H0016122 PW	3640	169.33							169.33
I	505	H0016295 PW	3640	800.00							800.00
S	201	H0016332 PW	3640	7,255.79							7,255.79
I	501	H0016332 PW	3640	467.19							467.19
I	505	H0016332 PW	3640	3,089.75							3,089.75
S	201	H0016526 PW	3640	1,452.43							1,452.43
I	505	H0016526 PW	3640	4,000.00							4,000.00
I	501	H0016681 PW	3640	825.00							825.00
S	201	H0016883 PW	3640	1,249.78							1,249.78
I	505	H0016883 PW	3640	4,351.00							4,351.00
S	201	H0017276 PW	3640	3,402.27							3,402.27
I	501	H0017276 PW	3640	1,376.62							1,376.62

Hawaii Electric Light Company, Inc.
State ITC (eligible cost types 2xx, 5xx; closed to plant)
For Year 2005

Jnl Cd	EE	WO	Acct	Amount	ROW	S&I	land	auto limit (a)	interco billing	direct overheads	SITC basis
S	201	H0017464 PW	3640	937.89							937.89
I	505	H0017464 PW	3640	5,664.00							5,664.00
S	201	H0017630 PW	3640	1,644.95							1,644.95
I	505	H0017630 PW	3640	11,937.00							11,937.00
S	201	H0017789 PW	3640	4,393.28							4,393.28
I	501	H0017789 PW	3640	251.56							251.56
I	505	H0017789 PW	3640	7,050.00							7,050.00
S	201	H0017897 PW	3640	427.48							427.48
I	501	H0017897 PW	3640	775.78							775.78
S	201	H0017968 PW	3640	1,509.09							1,509.09
I	505	H0017968 PW	3640	16,794.19							16,794.19
I	501	H0018397 PW	3640	1,195.00							1,195.00
S	201	H0018458 PW	3640	(4.91)							(4.91)
I	501	H0018458 PW	3640	287.50							287.50
I	505	H0018458 PW	3640	1,800.00							1,800.00
S	201	H0018507 PW	3640	2,339.21							2,339.21
I	501	H0018507 PW	3640	627.34							627.34
I	505	H0018507 PW	3640	19,377.00							19,377.00
S	201	H0018631 PW	3640	284.53							284.53
I	505	H0018631 PW	3640	1,544.17							1,544.17
S	201	H0018687 PW	3640	44.03							44.03
S	201	H0018966 PW	3640	1,284.66							1,284.66
I	501	H0018966 PW	3640	1,288.00							1,288.00
S	201	H0018987 PW	3640	3,466.73							3,466.73
M	501	H0018987 PW	3640	(0.00)						(0.00)	-
I	505	H0018987 PW	3640	35,890.00							35,890.00
S	201	H0019043 PW	3640	273.29							273.29
I	505	H0019043 PW	3640	350.00							350.00
S	201	H0019087 PW	3640	266.41							266.41
I	505	H0019087 PW	3640	2,685.67							2,685.67
S	201	H0019134 PW	3640	44.03							44.03
I	505	H0019184 PW	3640	550.00							550.00
S	201	H0019184 PW	3640	122.31							122.31
S	201	H0019369 PW	3640	3,318.65							3,318.65
I	505	H0019369 PW	3640	19,782.42							19,782.42
S	201	H0019372 PW	3640	46.92							46.92
I	501	H0019372 PW	3640	133.07							133.07
I	501	H0019392 PW	3640	89.84							89.84
S	201	H0019462 PW	3640	(0.00)							(0.00)
I	501	H0019467 PW	3640	67.71							67.71
S	201	H0019479 PW	3640	314.76							314.76
I	505	H0019479 PW	3640	350.00							350.00
S	201	H0019537 PW	3640	284.53							284.53
I	501	H0019537 PW	3640	600.00							600.00
I	505	H0019537 PW	3640	500.00							500.00
S	201	H0019600 PW	3640	2,002.98							2,002.98
I	501	H0019600 PW	3640	2,000.00							2,000.00
I	501	H0019667 PW	3640	359.37							359.37
S	201	H0019683 PW	3640	1,149.30							1,149.30
I	505	H0019683 PW	3640	9,645.10							9,645.10
S	201	H0019734 PW	3640	512.52							512.52
I	505	H0019734 PW	3640	600.00							600.00
S	201	H0019910 PW	3640	1,412.13							1,412.13
I	505	H0019910 PW	3640	3,100.00							3,100.00
S	201	H0020368 PW	3640	284.40							284.40
I	501	H0020368 PW	3640	89.84							89.84
S	201	H0020531 PW	3640	597.55							597.55
I	501	H0020531 PW	3640	7,154.42							7,154.42
S	201	H0020702 PW	3640	1,171.25							1,171.25
I	505	H0020702 PW	3640	5,585.00							5,585.00
S	201	H0020708 PW	3640	2,042.76							2,042.76
I	505	H0020708 PW	3640	11,022.88							11,022.88
I	501	H0020741 PW	3640	781.66							781.66
S	201	H0020763 PW	3640	2,394.36							2,394.36
I	501	H0020763 PW	3640	1,483.60							1,483.60
I	505	H0020763 PW	3640	4,100.00							4,100.00
I	505	H0020858 PW	3640	600.00							600.00
S	201	H0020888 PW	3640	673.93							673.93
I	501	H0020888 PW	3640	1,329.14							1,329.14
I	505	H0020938 PW	3640	1,450.00							1,450.00
I	501	H0020976 PW	3640	35.94							35.94
I	505	H0020976 PW	3640	600.00							600.00

Hawaii Electric Light Company, Inc.
State ITC (eligible cost types 2xx, 5xx; closed to plant)
For Year 2005

Jnl Cd	EE	WO	Acct	Amount	ROW	S&I	land	auto fmtl (a)	interco billing	direct overheads	SITC basis
I	505	H0020991 PW	3640	600.00							600.00
S	201	H0020996 PW	3640	715.26							715.26
I	501	H0020996 PW	3640	190.10							190.10
I	505	H0020996 PW	3640	1,200.00							1,200.00
S	201	H0021055 PW	3640	479.96							479.96
I	505	H0021055 PW	3640	3,676.48							3,676.48
S	201	H0021116 PW	3640	128.46							128.46
S	201	H0021223 PW	3640	1,005.32							1,005.32
I	505	H0021223 PW	3640	4,893.75							4,893.75
S	201	H0021256 PW	3640	2,435.29							2,435.29
I	505	H0021256 PW	3640	2,000.00							2,000.00
S	201	H0021266 PW	3640	1,327.44							1,327.44
I	505	H0021266 PW	3640	4,200.00							4,200.00
I	505	H0021370 PW	3640	1,325.00							1,325.00
S	201	H0021443 PW	3640	2,068.62							2,068.62
I	501	H0021443 PW	3640	143.75							143.75
I	505	H0021443 PW	3640	1,725.00							1,725.00
S	201	H0021462 PW	3640	1,780.11							1,780.11
I	505	H0021462 PW	3640	4,900.00							4,900.00
S	201	H0021505 PW	3640	2,212.34							2,212.34
I	501	H0021505 PW	3640	179.69							179.69
I	505	H0021505 PW	3640	3,600.00							3,600.00
S	201	H0021585 PW	3640	266.41							266.41
I	501	H0021585 PW	3640	538.83							538.83
I	501	H0021596 PW	3640	107.81							107.81
I	501	H0021659 PW	3640	71.87							71.87
I	505	H0021746 PW	3640	800.00							800.00
S	201	H0021766 PW	3640	694.39							694.39
I	505	H0021766 PW	3640	2,686.21							2,686.21
S	201	H0021814 PW	3640	308.73							308.73
I	501	H0021814 PW	3640	2,972.38							2,972.38
S	201	H0021891 PW	3640	825.62							825.62
I	501	H0021891 PW	3640	1,257.27							1,257.27
S	201	H0021919 PW	3640	3,454.55							3,454.55
I	505	H0021919 PW	3640	2,900.00							2,900.00
S	201	H0021926 PW	3640	2,245.66							2,245.66
I	501	H0021926 PW	3640	179.69							179.69
I	505	H0021926 PW	3640	4,000.00							4,000.00
S	201	H0021932 PW	3640	1,063.42							1,063.42
I	501	H0021932 PW	3640	3,500.00							3,500.00
S	201	H0021991 PW	3640	2,529.24							2,529.24
I	501	H0021991 PW	3640	684.36							684.36
I	505	H0021991 PW	3640	10,444.19							10,444.19
S	201	H0022001 PW	3640	1,775.15							1,775.15
I	501	H0022001 PW	3640	143.75							143.75
I	505	H0022001 PW	3640	3,650.00							3,650.00
S	201	H0022054 PW	3640	266.41							266.41
I	501	H0022054 PW	3640	453.65							453.65
I	501	H0022077 PW	3640	161.72							161.72
I	505	H0022077 PW	3640	3,759.64							3,759.64
S	201	H0022327 PW	3640	266.41							266.41
I	501	H0022327 PW	3640	538.83							538.83
S	201	H0022351 PW	3640	1,117.58							1,117.58
I	501	H0022351 PW	3640	71.87							71.87
I	505	H0022351 PW	3640	2,550.00							2,550.00
I	501	H0022516 PW	3640	287.50							287.50
I	505	H0022516 PW	3640	2,800.00							2,800.00
S	201	H0022583 PW	3640	327.28							327.28
S	201	H0022607 PW	3640	1,238.51							1,238.51
I	501	H0022607 PW	3640	35.94							35.94
I	505	H0022607 PW	3640	1,975.00							1,975.00
S	201	H0022625 PW	3640	5,490.97							5,490.97
I	501	H0022625 PW	3640	224.61							224.61
I	505	H0022625 PW	3640	4,650.00							4,650.00
S	201	H0022635 PW	3640	284.53							284.53
I	501	H0022635 PW	3640	743.75							743.75
S	201	H0022688 PW	3640	-							-
I	501	H0022688 PW	3640	5,723.54							5,723.54
S	201	H0022775 PW	3640	1,883.63							1,883.63
I	505	H0022775 PW	3640	2,000.00							2,000.00
I	505	H0022787 PW	3640	3,146.30							3,146.30
S	201	H0022788 PW	3640	760.63							760.63

Hawaii Electric Light Company, Inc.
State ITC (eligible cost types 2xx, 5xx; closed to plant)
For Year 2005

Jnl Cd	EE	WO	Acct	Amount	ROW	S&I	land	auto limit (a)	interco billing	direct overheads	SITC basis
I	505	H0022788 PW	3640	1,292.00							1,292.00
I	505	H0022806 PW	3640	1,600.00							1,600.00
S	201	H0022947 PW	3640	1,742.94							1,742.94
I	505	H0022947 PW	3640	4,084.77							4,084.77
S	201	H0023027 PW	3640	1,388.70							1,388.70
I	501	H0023027 PW	3640	197.65							197.65
I	505	H0023027 PW	3640	2,350.00							2,350.00
S	201	H0023049 PW	3640	1,953.77							1,953.77
I	505	H0023049 PW	3640	10,554.00							10,554.00
S	201	H0023173 PW	3640	1,405.46							1,405.46
I	505	H0023173 PW	3640	3,075.00							3,075.00
S	201	H0023292 PW	3640	1,826.39							1,826.39
I	501	H0023292 PW	3640	266.14							266.14
I	505	H0023292 PW	3640	1,280.00							1,280.00
S	201	H0023328 PW	3640	1,653.17							1,653.17
I	505	H0023328 PW	3640	753.30							753.30
S	201	H0023381 PW	3640	2,773.80							2,773.80
I	505	H0023381 PW	3640	7,800.00							7,800.00
S	201	H0023388 PW	3640	1,187.20							1,187.20
I	501	H0023388 PW	3640	143.75							143.75
I	505	H0023388 PW	3640	1,200.00							1,200.00
S	201	H0023406 PW	3640	1,800.99							1,800.99
I	501	H0023406 PW	3640	251.56							251.56
I	505	H0023406 PW	3640	367.44							367.44
S	201	H0023432 PW	3640	614.53							614.53
S	201	H0023590 PW	3640	479.96							479.96
I	501	H0023590 PW	3640	5,944.77							5,944.77
S	201	H0023813 PW	3640	2,492.98							2,492.98
I	505	H0023813 PW	3640	2,915.00							2,915.00
S	201	H0023860 PW	3640	266.42							266.42
I	501	H0023860 PW	3640	571.87							571.87
S	201	H0023937 PW	3640	1,992.97							1,992.97
I	501	H0023937 PW	3640	5,015.20							5,015.20
S	201	H0023986 PW	3640	606.09							606.09
I	501	H0023986 PW	3640	197.65							197.65
I	505	H0023986 PW	3640	1,647.54							1,647.54
S	201	H0024007 PW	3640	652.84							652.84
I	501	H0024007 PW	3640	1,235.66							1,235.66
S	201	H0024062 PW	3640	266.42							266.42
I	501	H0024062 PW	3640	143.75							143.75
I	505	H0024062 PW	3640	568.40							568.40
S	201	H0024134 PW	3640	347.51							347.51
I	501	H0024134 PW	3640	125.78							125.78
I	505	H0024134 PW	3640	1,100.00							1,100.00
S	201	H0024146 PW	3640	2,341.40							2,341.40
I	501	H0024146 PW	3640	323.44							323.44
I	505	H0024146 PW	3640	3,525.00							3,525.00
S	201	H0024197 PW	3640	266.42							266.42
I	501	H0024197 PW	3640	2,772.30							2,772.30
S	201	H0024214 PW	3640	1,844.97							1,844.97
I	505	H0024214 PW	3640	14,065.00							14,065.00
S	201	H0024226 PW	3640	266.42							266.42
I	501	H0024226 PW	3640	6,339.25							6,339.25
S	201	H0024230 PW	3640	266.41							266.41
I	501	H0024230 PW	3640	617.83							617.83
S	201	H0024245 PW	3640	3,702.68							3,702.68
S	201	H0024321 PW	3640	989.44							989.44
I	505	H0024321 PW	3640	2,250.00							2,250.00
S	201	H0024359 PW	3640	1,452.99							1,452.99
I	505	H0024359 PW	3640	7,475.00							7,475.00
S	201	H0024442 PW	3640	266.42							266.42
I	501	H0024442 PW	3640	35.94							35.94
I	505	H0024442 PW	3640	675.00							675.00
S	201	H0024460 PW	3640	1,684.24							1,684.24
I	501	H0024460 PW	3640	143.75							143.75
I	505	H0024460 PW	3640	2,600.00							2,600.00
S	201	H0024599 PW	3640	1,397.41							1,397.41
I	501	H0024599 PW	3640	3,370.00							3,370.00
S	201	H0024616 PW	3640	764.36							764.36
I	505	H0024616 PW	3640	4,844.39							4,844.39
S	201	H0024654 PW	3640	708.17							708.17
I	501	H0024654 PW	3640	71.87							71.87

Hawaii Electric Light Company, Inc.
State ITC (eligible cost types 2xx, 5xx; closed to plant)
For Year 2005

Jnl Cd	EE	WO	Acct	Amount	ROW	S&I	land	auto limit (a)	interco billing	direct overheads	SITC basis
I	505	H0024654 PW	3640	1,365.67							1,365.67
S	201	H0024702 PW	3640	1,012.19							1,012.19
I	501	H0024702 PW	3640	488.60							488.60
S	201	H0024796 PW	3640	266.42							266.42
I	501	H0024796 PW	3640	71.87							71.87
I	505	H0024796 PW	3640	575.00							575.00
S	201	H0024854 PW	3640	266.42							266.42
I	505	H0024854 PW	3640	514.86							514.86
S	201	H0024870 PW	3640	446.41							446.41
I	501	H0024870 PW	3640	71.87							71.87
I	505	H0024870 PW	3640	823.77							823.77
S	201	H0024936 PW	3640	924.04							924.04
M	501	H0024936 PW	3640	(0.00)						(0.00)	-
I	505	H0024936 PW	3640	4,770.07							4,770.07
S	201	H0024983 PW	3640	266.42							266.42
I	501	H0024983 PW	3640	1,400.00							1,400.00
S	201	H0025080 PW	3640	362.92							362.92
I	501	H0025080 PW	3640	4,292.65							4,292.65
S	201	H0025083 PW	3640	485.49							485.49
I	505	H0025083 PW	3640	2,318.61							2,318.61
S	201	H0025097 PW	3640	2,716.72							2,716.72
I	505	H0025097 PW	3640	6,354.07							6,354.07
S	201	H0025427 PW	3640	266.42							266.42
I	501	H0025427 PW	3640	850.00							850.00
S	201	H0025501 PW	3640	1,420.52							1,420.52
I	505	H0025501 PW	3640	1,800.00							1,800.00
S	201	H0025707 PW	3640	893.24							893.24
I	505	H0025707 PW	3640	5,110.36							5,110.36
S	201	H0025769 PW	3640	1,347.36							1,347.36
I	505	H0025769 PW	3640	2,300.00							2,300.00
S	201	H0026016 PW	3640	351.01							351.01
I	501	H0026016 PW	3640	1,051.89							1,051.89
S	201	H0026030 PW	3640	913.66							913.66
I	501	H0026030 PW	3640	143.75							143.75
I	505	H0026030 PW	3640	2,050.00							2,050.00
S	201	H0026060 PW	3640	389.50							389.50
I	505	H0026060 PW	3640	374.15							374.15
S	201	H0026409 PW	3640	266.42							266.42
I	501	H0026409 PW	3640	114.06							114.06
I	505	H0026409 PW	3640	2,368.61							2,368.61
S	201	H0026575 PW	3640	586.86							586.86
S	201	H0026621 PW	3640	138.10							138.10
S	201	H0026643 PW	3640	402.47							402.47
I	505	H0026643 PW	3640	1,950.00							1,950.00
S	201	H0026886 PW	3640	2,271.03							2,271.03
I	505	H0026886 PW	3640	13,560.28							13,560.28
S	201	H0027030 PW	3640	591.25							591.25
I	505	H0027030 PW	3640	2,475.65							2,475.65
S	201	H0027045 PW	3640	1,845.58							1,845.58
I	505	H0027045 PW	3640	7,110.00							7,110.00
S	201	H0027360 PW	3640	439.11							439.11
I	505	H0027360 PW	3640	850.00							850.00
S	201	H0028674 PW	3640	1,973.36							1,973.36
I	505	H0028674 PW	3640	3,170.00							3,170.00
I	505	TD002528	3640	(156.00)							(156.00)
I	505	TD007127	3640	(0.00)							(0.00)
S	201	TD008333	3640	28.59							28.59
I	505	TD008333	3640	250.00							250.00
I	501	TD018144	3640	169.27							169.27
S	201	TD019785	3640	1,622.92							1,622.92
I	501	TD019785	3640	587.54							587.54
I	505	TD019785	3640	1,900.00							1,900.00
S	201	TD019856	3640	1,090.17							1,090.17
I	501	TD019856	3640	541.89							541.89
I	505	TD019856	3640	948.64							948.64
S	201	TD020248	3640	144.82							144.82
S	201	TD020250	3640	15.38							15.38
I	505	TD020250	3640	1,559.11							1,559.11
I	505	TD020251	3640	-							-
S	201	TD020253	3640	496.54							496.54
I	501	TD020253	3640	402.13							402.13
S	201	TD020504	3640	2,117.21							2,117.21

Hawaii Electric Light Company, Inc.
State ITC (eligible cost types 2xx, 5xx; closed to plant)
For Year 2005

Jnl Cd	EE	WO	Acct	Amount	ROW	S&I	land	auto limit (a)	interco billing	direct overheads	SITC basis
I	501	TD020504	3640	541.89							541.89
I	505	TD020504	3640	1,800.00							1,800.00
S	201	TD020972	3640	1,832.80							1,832.80
I	501	TD020972	3640	1,240.65							1,240.65
I	505	TD020972	3640	12,000.00							12,000.00
I	501	TD021034	3640	128.34							128.34
S	201	TD021323	3640	640.62							640.62
I	501	TD021323	3640	2,817.13							2,817.13
S	201	TD021380	3640	(0.00)							(0.00)
I	501	TD021482	3640	71.87							71.87
I	505	TD021813	3640	1,155.00							1,155.00
M	501	WH983160	3640	(218.02)						(218.02)	-
I	501	00000057 PW	3650	(101.23)							(101.23)
S	201	00000074 PW	3650	(19.31)							(19.31)
I	501	00000212 PW	3650	(96.29)							(96.29)
I	501	00000216 PW	3650	(64.89)							(64.89)
S	201	00000222 PW	3650	(7.68)							(7.68)
S	201	00000327 PW	3650	(54.77)							(54.77)
S	201	00000373 PW	3650	1,057.95							1,057.95
S	201	00000445 PW	3650	(18.26)							(18.26)
I	501	00000445 PW	3650	(186.20)							(186.20)
S	201	00000449 PW	3650	-							-
I	501	00000449 PW	3650	(0.00)							(0.00)
I	501	00000796 PW	3650	(378.00)							(378.00)
M	201	00001092 PW	3650	-						-	-
S	201	00001092 PW	3650	(162.19)							(162.19)
I	501	00001107 PW	3650	(124.58)							(124.58)
I	505	00001117 PW	3650	(1,011.05)							(1,011.05)
M	505	00001117 PW	3650	(35.24)						(35.24)	-
P	505	00001117 PW	3650	(254.97)							(254.97)
Q	505	00001117 PW	3650	10.19							10.19
M	505	00001295 PW	3650	(2,331.24)						(2,331.24)	-
S	201	00001328 PW	3650	(38.29)							(38.29)
I	501	00001330 PW	3650	(95.31)							(95.31)
S	201	00001378 PW	3650	(460.90)							(460.90)
S	201	00001467 PW	3650	(974.03)							(974.03)
S	201	00001485 PW	3650	-							-
I	501	00001547 PW	3650	1,874.99							1,874.99
S	201	00001564 PW	3650	(3,047.86)							(3,047.86)
S	201	00001615 PW	3650	(29.40)							(29.40)
S	201	00001660 PW	3650	(36.02)							(36.02)
M	201	00001678 PW	3650	179.82						179.82	-
P	201	00001678 PW	3650	450.22							450.22
S	201	00001685 PW	3650	18.53							18.53
S	201	00001709 PW	3650	1,368.69							1,368.69
S	201	00001779 PW	3650	(45.48)							(45.48)
S	201	00001820 PW	3650	(28.70)							(28.70)
I	501	00001847 PW	3650	(114.58)							(114.58)
M	201	00001882 PW	3650	(70.93)						(70.93)	-
I	501	00002021 PW	3650	191.35							191.35
S	201	00002074 PW	3650	(25.24)							(25.24)
S	201	00002117 PW	3650	(39.57)							(39.57)
I	501	00002254 PW	3650	(15.89)							(15.89)
S	201	00002551 PW	3650	(175.57)							(175.57)
I	505	00002589 PW	3650	(256.25)							(256.25)
I	501	00002641 PW	3650	-							-
S	201	00002645 PW	3650	-							-
I	501	00002728 PW	3650	(67.71)							(67.71)
I	501	00002779 PW	3650	(50.78)							(50.78)
S	201	00002845 PW	3650	694.12							694.12
I	501	00002845 PW	3650	247.13							247.13
S	201	00003071 PW	3650	(43.39)							(43.39)
S	201	00003109 PW	3650	(43.39)							(43.39)
I	501	00003206 PW	3650	(171.09)							(171.09)
S	201	00003221 PW	3650	(183.46)							(183.46)
M	201	00003323 PW	3650	(281.65)						(281.65)	-
S	201	00003335 PW	3650	(130.94)							(130.94)
I	501	00003335 PW	3650	(251.56)							(251.56)
S	201	00003413 PW	3650	(9.46)							(9.46)
S	201	00003487 PW	3650	(74.95)							(74.95)
S	201	00003524 PW	3650	3,864.58							3,864.58
I	501	00003524 PW	3650	152.08							152.08

Hawaii Electric Light Company, Inc.
State ITC (eligible cost types 2xx, 5xx; closed to plant)
For Year 2005

Jnl Cd	EE	WO	Acct	Amount	ROW	S&I	land	auto limit (a)	interco billing	direct overheads	SITC basis
I	505	00003524 PW	3650	4,880.00							4,880.00
S	201	00003545 PW	3650	(121.44)							(121.44)
S	201	00003631 PW	3650	(19.38)							(19.38)
S	201	00003807 PW	3650	608.83							608.83
I	501	00003850 PW	3650	(2,370.00)							(2,370.00)
I	501	00003954 PW	3650	(67.71)							(67.71)
S	201	00004314 PW	3650	(0.00)							(0.00)
S	201	00004373 PW	3650	(46.39)							(46.39)
I	501	00004393 PW	3650	(0.00)							(0.00)
S	201	00004456 PW	3650	(23.86)							(23.86)
S	201	00004541 PW	3650	(54.24)							(54.24)
I	501	00004541 PW	3650	(104.56)							(104.56)
S	201	00004552 PW	3650	(47.70)							(47.70)
I	501	00004627 PW	3650	(114.06)							(114.06)
S	201	00004665 PW	3650	(75.58)							(75.58)
S	201	00004724 PW	3650	(102.69)							(102.69)
S	201	00004797 PW	3650	(71.59)							(71.59)
I	501	00004797 PW	3650	(35.94)							(35.94)
S	201	00004838 PW	3650	-							-
S	201	00004866 PW	3650	(125.88)							(125.88)
I	501	00004945 PW	3650	(67.71)							(67.71)
I	501	00005007 PW	3650	67.71							67.71
S	201	00005038 PW	3650	(56.75)							(56.75)
S	201	00005135 PW	3650	(251.48)							(251.48)
I	501	00005135 PW	3650	(107.81)							(107.81)
S	201	00005136 PW	3650	(57.76)							(57.76)
I	501	00005136 PW	3650	(233.59)							(233.59)
S	201	00005148 PW	3650	94.24							94.24
I	505	00005259 PW	3650	(325.00)							(325.00)
I	501	00005265 PW	3650	(646.88)							(646.88)
I	505	00005265 PW	3650	(325.00)							(325.00)
I	501	00005283 PW	3650	(53.91)							(53.91)
I	505	00005283 PW	3650	(325.00)							(325.00)
I	501	00005284 PW	3650	(53.91)							(53.91)
I	505	00005284 PW	3650	(325.00)							(325.00)
S	201	00005319 PW	3650	-							-
I	505	00005319 PW	3650	450.00							450.00
I	505	00005384 PW	3650	1,200.00							1,200.00
S	201	00005379 PW	3650	(71.36)							(71.36)
S	201	00005381 PW	3650	(71.36)							(71.36)
I	501	00005381 PW	3650	(118.49)							(118.49)
S	201	00005382 PW	3650	(71.36)							(71.36)
S	201	00005383 PW	3650	(71.36)							(71.36)
I	501	00005383 PW	3650	(93.10)							(93.10)
S	201	00005384 PW	3650	(71.36)							(71.36)
S	201	00005396 PW	3650	(269.00)							(269.00)
S	201	00005432 PW	3650	(0.00)							(0.00)
I	501	00005432 PW	3650	(0.00)							(0.00)
I	501	00005450 PW	3650	(67.71)							(67.71)
S	201	00005456 PW	3650	191.81							191.81
S	201	00005530 PW	3650	(23.79)							(23.79)
S	201	00005631 PW	3650	(95.16)							(95.16)
S	201	00005696 PW	3650	4,758.66							4,758.66
I	501	00005696 PW	3650	6,469.52							6,469.52
M	201	00005738 PW	3650	(49.47)						(49.47)	-
S	201	00005738 PW	3650	11,963.75							11,963.75
I	501	00005738 PW	3650	14,659.64							14,659.64
I	505	00005747 PW	3650	1,500.00							1,500.00
S	201	00005748 PW	3650	-							-
I	501	00005801 PW	3650	3,608.15							3,608.15
S	201	00005871 PW	3650	3,726.66							3,726.66
I	501	00005871 PW	3650	431.25							431.25
I	505	00005871 PW	3650	4,200.00							4,200.00
S	201	00005938 PW	3650	224.33							224.33
I	501	00005938 PW	3650	190.10							190.10
S	201	00005985 PW	3650	1,838.08							1,838.08
I	501	00005985 PW	3650	341.40							341.40
I	505	00005985 PW	3650	1,500.00							1,500.00
I	501	00006011 PW	3650	(67.71)							(67.71)
S	201	00006053 PW	3650	(47.78)							(47.78)
S	201	00006090 PW	3650	17.14							17.14
S	201	00006253 PW	3650	-							-

Hawaii Electric Light Company, Inc.
State ITC (eligible cost types 2xx, 5xx; closed to plant)
For Year 2005

Jrl Cd	EE	WO	Acct	Amount	ROW	S&I	land	auto limit (a)	intarco billing	direct overheads	SITC basis
I	501	00006259 PW	3650	900.00							900.00
S	201	00006311 PW	3650	(178.05)							(178.05)
M	501	00006315 PW	3650	(125.00)						(125.00)	-
S	201	00006333 PW	3650	372.94							372.94
S	201	00006362 PW	3650	(0.00)							(0.00)
S	201	00006403 PW	3650	(69.60)							(69.60)
S	201	00006508 PW	3650	11,323.34							11,323.34
I	501	00006508 PW	3650	1,239.83							1,239.83
I	505	00006508 PW	3650	8,074.34							8,074.34
I	502	00006527 PW	3650	152.08							152.08
S	201	00006580 PW	3650	180.57							180.57
I	501	00006580 PW	3650	143.75							143.75
S	201	00006610 PW	3650	(127.58)							(127.58)
S	201	00006614 PW	3650	3,508.67							3,508.67
I	505	00006614 PW	3650	10,611.64							10,611.64
S	201	00006619 PW	3650	1,244.30							1,244.30
I	505	00006641 PW	3650	945.00							945.00
M	505	00006641 PW	3650	(945.00)						(945.00)	-
S	201	00006667 PW	3650	(46.40)							(46.40)
S	201	00006680 PW	3650	6,616.51							6,616.51
I	501	00006680 PW	3650	6,968.74							6,968.74
S	201	00006691 PW	3650	-							-
S	201	00006722 PW	3650	205.52							205.52
I	501	00006722 PW	3650	143.74							143.74
M	201	00006737 PW	3650	(762.11)						(762.11)	-
M	501	00006737 PW	3650	(418.22)						(418.22)	-
M	505	00006737 PW	3650	(1,200.00)						(1,200.00)	-
S	201	00006789 PW	3650	(279.30)							(279.30)
I	501	00006789 PW	3650	736.72							736.72
I	501	00006826 PW	3650	305.47							305.47
I	501	00006832 PW	3650	143.75							143.75
I	501	00006833 PW	3650	2,975.66							2,975.66
I	505	00006850 PW	3650	(260.00)							(260.00)
S	201	00006870 PW	3650	(23.20)							(23.20)
S	201	00006874 PW	3650	3,053.22							3,053.22
I	501	00006874 PW	3650	305.47							305.47
I	505	00006874 PW	3650	3,050.00							3,050.00
I	501	00006914 PW	3650	3,255.21							3,255.21
S	201	00006926 PW	3650	(35.26)							(35.26)
I	501	00006941 PW	3650	(135.42)							(135.42)
I	501	00006949 PW	3650	(152.34)							(152.34)
I	501	00006956 PW	3650	(101.56)							(101.56)
S	201	00007010 PW	3650	137.14							137.14
I	505	00007064 PW	3650	(950.00)							(950.00)
I	501	00007100 PW	3650	50.78							50.78
S	201	00007117 PW	3650	56.48							56.48
I	501	00007152 PW	3650	1,165.65							1,165.65
I	505	00007152 PW	3650	900.00							900.00
S	201	00007164 PW	3650	65.13							65.13
I	501	00007174 PW	3650	(0.00)							(0.00)
I	501	00007179 PW	3650	107.81							107.81
S	201	00007190 PW	3650	54.45							54.45
S	201	00007225 PW	3650	342.33							342.33
S	201	00007295 PW	3650	(164.58)							(164.58)
S	201	00007308 PW	3650	4,318.64							4,318.64
S	201	00007312 PW	3650	-							-
I	501	00007312 PW	3650	107.81							107.81
S	201	00007319 PW	3650	32.95							32.95
S	201	00007335 PW	3650	26.51							26.51
I	501	00007340 PW	3650	1,260.26							1,260.26
I	505	00007340 PW	3650	932.34							932.34
I	501	00007343 PW	3650	1,311.71							1,311.71
I	505	00007352 PW	3650	-							-
S	201	00007362 PW	3650	3,656.70							3,656.70
I	501	00007362 PW	3650	449.21							449.21
I	505	00007362 PW	3650	514.86							514.86
I	501	00007363 PW	3650	1,254.78							1,254.78
I	501	00007403 PW	3650	(0.00)							(0.00)
S	201	00007428 PW	3650	1,741.73							1,741.73
I	501	00007428 PW	3650	1,221.83							1,221.83
S	201	00007432 PW	3650	123.99							123.99

Hawaii Electric Light Company, Inc.
State ITC (eligible cost types 2xx, 5xx; closed to plant)
For Year 2005

Jnl Cd	EE	WO	Acct	Amount	ROW	S&I	land	auto limit (a)	interco billing	direct overheads	SITC basis
I	501	00007432 PW	3650	125.78							125.78
I	501	00007456 PW	3650	(0.00)							(0.00)
S	201	00007463 PW	3650	396.31							396.31
S	201	00007478 PW	3650	(0.00)							(0.00)
S	201	00007483 PW	3650	158.53							158.53
I	501	00007483 PW	3650	71.87							71.87
S	201	00007484 PW	3650	292.98							292.98
S	201	00007492 PW	3650	58.11							58.11
S	201	00007493 PW	3650	116.16							116.16
S	201	00007495 PW	3650	245.98							245.98
I	501	00007495 PW	3650	125.78							125.78
S	201	00007499 PW	3650	65.92							65.92
S	201	00007503 PW	3650	(0.00)							(0.00)
S	201	00007510 PW	3650	201.34							201.34
S	201	00007512 PW	3650	1,364.34							1,364.34
I	505	00007512 PW	3650	1,522.50							1,522.50
S	201	00007525 PW	3650	(0.00)							(0.00)
S	201	00007531 PW	3650	1,780.18							1,780.18
I	501	00007531 PW	3650	513.37							513.37
I	505	00007531 PW	3650	1,600.00							1,600.00
S	201	00007539 PW	3650	1,771.12							1,771.12
I	501	00007539 PW	3650	748.28							748.28
S	201	00007544 PW	3650	32.96							32.96
S	201	00007548 PW	3650	116.21							116.21
S	201	00007561 PW	3650	(0.00)							(0.00)
S	201	00007567 PW	3650	(0.00)							(0.00)
S	201	00007568 PW	3650	254.50							254.50
S	201	00007591 PW	3650	1,454.15							1,454.15
I	501	00007591 PW	3650	1,656.25							1,656.25
S	201	00007593 PW	3650	16.88							16.88
I	501	00007593 PW	3650	143.75							143.75
S	201	00007594 PW	3650	112.29							112.29
S	201	00007601 PW	3650	174.45							174.45
S	201	00007625 PW	3650	137.36							137.36
S	201	00007626 PW	3650	137.59							137.59
I	501	00007626 PW	3650	107.81							107.81
S	201	00007650 PW	3650	44.79							44.79
S	201	00007658 PW	3650	(0.00)							(0.00)
I	501	00007658 PW	3650	(0.00)							(0.00)
S	201	00007681 PW	3650	194.17							194.17
S	201	00007694 PW	3650	225.29							225.29
I	501	00007694 PW	3650	395.31							395.31
S	201	00007695 PW	3650	223.89							223.89
I	501	00007695 PW	3650	143.75							143.75
S	201	00007698 PW	3650	1,264.08							1,264.08
I	501	00007698 PW	3650	456.33							456.33
I	505	00007698 PW	3650	494.64							494.64
M	201	00007700 PW	3650	55.90						55.90	-
P	201	00007700 PW	3650	536.42							536.42
S	201	00007700 PW	3650	4,225.26							4,225.26
I	501	00007700 PW	3650	655.41							655.41
I	505	00007700 PW	3650	4,680.00							4,680.00
S	201	00007707 PW	3650	(0.00)							(0.00)
I	501	00007707 PW	3650	143.75							143.75
S	201	00007709 PW	3650	938.21							938.21
I	505	00007709 PW	3650	1,450.00							1,450.00
S	201	00007717 PW	3650	108.90							108.90
I	501	00007717 PW	3650	71.87							71.87
S	201	00007719 PW	3650	30.86							30.86
S	201	00007721 PW	3650	1,079.12							1,079.12
I	505	00007721 PW	3650	1,169.48							1,169.48
S	201	00007727 PW	3650	131.78							131.78
I	501	00007727 PW	3650	161.72							161.72
S	201	00007738 PW	3650	92.58							92.58
S	201	00007751 PW	3650	163.34							163.34
S	201	00007755 PW	3650	92.58							92.58
S	201	00007774 PW	3650	2,843.44							2,843.44
I	501	00007774 PW	3650	251.58							251.58
S	201	00007781 PW	3650	217.80							217.80

Hawaii Electric Light Company, Inc.
State ITC (eligible cost types 2xx, 5xx; closed to plant)
For Year 2005

Jnl Cd	EE	WO	Acct	Amount	ROW	S&I	land	auto limit (a)	interco billing	direct overheads	SITC basis
S	201	00007782 PW	3650	20.12							20.12
S	201	00007796 PW	3650	68.64							68.64
S	201	00007804 PW	3650	996.31							996.31
I	501	00007804 PW	3650	323.43							323.43
I	505	00007804 PW	3650	3,978.78							3,978.78
S	201	00007812 PW	3650	92.58							92.58
I	501	00007812 PW	3650	71.87							71.87
S	201	00007814 PW	3650	1,208.71							1,208.71
I	501	00007814 PW	3650	215.62							215.62
I	505	00007814 PW	3650	1,850.00							1,850.00
S	201	00007819 PW	3650	1,215.76							1,215.76
I	501	00007819 PW	3650	143.75							143.75
I	505	00007819 PW	3650	1,150.00							1,150.00
S	201	00007822 PW	3650	1,193.69							1,193.69
I	501	00007822 PW	3650	143.75							143.75
I	505	00007822 PW	3650	1,589.41							1,589.41
S	201	00007825 PW	3650	68.59							68.59
I	501	00007825 PW	3650	143.75							143.75
S	201	00007852 PW	3650	54.45							54.45
S	201	00007865 PW	3650	1,166.50							1,166.50
I	501	00007865 PW	3650	107.81							107.81
I	505	00007865 PW	3650	1,030.88							1,030.88
S	201	00007884 PW	3650	92.58							92.58
I	501	00007884 PW	3650	156.86							156.86
S	201	00007901 PW	3650	(0.00)							(0.00)
I	501	00007911 PW	3650	(0.00)							(0.00)
S	201	00007925 PW	3650	851.07							851.07
I	501	00007925 PW	3650	641.72							641.72
I	505	00007925 PW	3650	815.20							815.20
S	201	00007937 PW	3650	106.30							106.30
S	201	00007945 PW	3650	445.74							445.74
S	201	00007953 PW	3650	974.92							974.92
I	501	00007953 PW	3650	251.56							251.56
I	505	00007953 PW	3650	514.84							514.84
S	201	00007960 PW	3650	186.46							186.46
S	201	00007969 PW	3650	527.02							527.02
S	201	00007971 PW	3650	191.04							191.04
S	201	00007989 PW	3650	108.44							108.44
I	501	00007996 PW	3650	143.75							143.75
S	201	00008005 PW	3650	(0.00)							(0.00)
S	201	00008012 PW	3650	54.46							54.46
I	501	00008012 PW	3650	71.87							71.87
S	201	00008028 PW	3650	92.58							92.58
S	201	00008037 PW	3650	54.46							54.46
S	201	00008063 PW	3650	84.21							84.21
S	201	00008066 PW	3650	116.95							116.95
I	501	00008066 PW	3650	107.81							107.81
S	201	00008067 PW	3650	54.46							54.46
S	201	00008080 PW	3650	127.95							127.95
I	501	00008080 PW	3650	342.25							342.25
I	505	00008080 PW	3650	1,781.25							1,781.25
S	201	00008083 PW	3650	83.97							83.97
S	201	00008084 PW	3650	(0.00)							(0.00)
I	501	00008084 PW	3650	143.75							143.75
S	201	00008114 PW	3650	2,377.33							2,377.33
I	501	00008114 PW	3650	2,841.94							2,841.94
I	505	00008114 PW	3650	2,104.81							2,104.81
S	201	00008115 PW	3650	422.20							422.20
I	501	00008115 PW	3650	10,330.93							10,330.93
S	201	00008116 PW	3650	1,156.09							1,156.09
I	501	00008116 PW	3650	2,029.11							2,029.11
S	201	00008121 PW	3650	118.90							118.90
I	501	00008121 PW	3650	107.81							107.81
S	201	00008126 PW	3650	108.91							108.91
S	201	00008146 PW	3650	136.93							136.93
I	501	00008146 PW	3650	89.84							89.84
S	201	00008158 PW	3650	751.46							751.46
I	501	00008158 PW	3650	107.81							107.81
S	201	00008165 PW	3650	28.38							28.38

Hawaii Electric Light Company, Inc.
State ITC (eligible cost types 2xx, 5xx; closed to plant)
For Year 2005

Jnl Cd	EE	WO	Acct	Amount	ROW	S&I	land	auto limit (a)	interpo billing	direct overheads	SITC basis
S	201	00008204 PW	3650	93.12							93.12
S	201	00008205 PW	3650	117.33							117.33
S	201	00008209 PW	3650	79.19							79.19
S	201	00008219 PW	3650	61.28							61.28
S	201	00008247 PW	3650	(0.00)							(0.00)
S	201	00008260 PW	3650	100.27							100.27
S	201	00008274 PW	3650	630.15							630.15
S	201	00008298 PW	3650	117.33							117.33
S	201	00008307 PW	3650	207.04							207.04
S	201	00008334 PW	3650	69.02							69.02
S	201	E0007386	3650	92.58							92.58
S	201	EE000116 PW	3650	(927.18)							(927.18)
S	201	EE000130 PW	3650	(34.79)							(34.79)
S	201	EE000163 PW	3650	(62.46)							(62.46)
S	201	EE000278 PW	3650	274.22							274.22
I	501	EE000278 PW	3650	1,100.00							1,100.00
I	505	EE000278 PW	3650	1,151.86							1,151.86
S	201	EE000306 PW	3650	157.85							157.85
I	501	EE000326 PW	3650	(88.01)							(88.01)
I	521	EE000326 PW	3650	(54.00)							(54.00)
S	201	EE000404 PW	3650	4,069.91							4,069.91
I	501	EE000404 PW	3650	1,368.76							1,368.76
I	505	EE000404 PW	3650	4,712.00							4,712.00
S	201	EE000405 PW	3650	8,208.18							8,208.18
I	501	EE000405 PW	3650	541.80							541.80
I	505	EE000405 PW	3650	3,940.00							3,940.00
I	505	EE000452 PW	3650	(577.75)							(577.75)
S	201	EE000460 PW	3650	1,541.48							1,541.48
I	505	EE000460 PW	3650	11,994.65							11,994.65
S	201	EE000466 PW	3650	(0.00)							(0.00)
I	505	EE000466 PW	3650	-							-
I	501	EE000505 PW	3650	332.69							332.69
I	505	EE000585 PW	3650	1,650.00							1,650.00
I	501	EE000637 PW	3650	(1,600.00)							(1,600.00)
S	201	EE000640 PW	3650	2,533.80							2,533.80
I	501	EE000640 PW	3650	3,271.09							3,271.09
S	201	EE000647 PW	3650	1,236.79							1,236.79
I	501	EE000647 PW	3650	969.53							969.53
I	505	EE000647 PW	3650	1,875.00							1,875.00
I	501	EE000650 PW	3650	431.25							431.25
S	201	EE000663 PW	3650	5,279.75							5,279.75
I	501	EE000663 PW	3650	5,311.72							5,311.72
I	505	EE000663 PW	3650	1,486.98							1,486.98
S	201	EE000687 PW	3650	5,132.88							5,132.88
I	501	EE000687 PW	3650	3,250.79							3,250.79
I	505	EE000687 PW	3650	14,118.00							14,118.00
I	505	EE000689 PW	3650	438.00							438.00
S	201	EE000694 PW	3650	229.81							229.81
I	505	EE000694 PW	3650	700.00							700.00
I	505	EE000696 PW	3650	741.20							741.20
S	201	EE000697 PW	3650	2,929.60							2,929.60
I	501	EE000697 PW	3650	304.16							304.16
I	505	EE000697 PW	3650	7,700.00							7,700.00
S	201	EE000704 PW	3650	1,378.25							1,378.25
I	505	EE000704 PW	3650	1,000.00							1,000.00
S	201	EE000710 PW	3650	105.52							105.52
S	201	EE000724 PW	3650	302.40							302.40
I	501	EE000724 PW	3650	862.19							862.19
S	201	EE000742 PW	3650	17.87							17.87
I	505	EE000742 PW	3650	350.00							350.00
S	201	EE000745 PW	3650	1,370.44							1,370.44
I	505	EE000745 PW	3650	8,165.59							8,165.59
S	201	EE000751 PW	3650	602.92							602.92
I	501	EE000751 PW	3650	161.72							161.72
I	505	EE000751 PW	3650	600.00							600.00
S	201	EE000753 PW	3650	399.81							399.81
I	501	EE000753 PW	3650	370.71							370.71
S	201	EE000762 PW	3650	545.27							545.27
S	201	EE000764 PW	3650	1,899.23							1,899.23

Hawaii Electric Light Company, Inc.
State ITC (eligible cost types 2xx, 5xx; closed to plant)
For Year 2005

Jnt Cd	EE	WO	Acct	Amount	ROW	S&I	land	auto limit (a)	interco billing	direct overheads	SITC basis
I	501	EE000764 PW	3650	251.56							251.56
I	505	EE000764 PW	3650	1,487.41							1,487.41
S	201	EE000768 PW	3650	1,124.17							1,124.17
I	501	EE000768 PW	3650	215.62							215.62
I	505	EE000768 PW	3650	743.71							743.71
S	201	EE000777 PW	3650	751.81							751.81
I	505	EE000777 PW	3650	2,700.00							2,700.00
S	201	EE000782 PW	3650	4,155.90							4,155.90
I	501	EE000782 PW	3650	2,718.06							2,718.06
M	501	EE000782 PW	3650	215.44						215.44	-
I	505	EE000782 PW	3650	2,130.00							2,130.00
S	201	EE000788 PW	3650	4,701.15							4,701.15
I	505	EE000788 PW	3650	8,500.00							8,500.00
S	201	EE000794 PW	3650	1,842.72							1,842.72
I	501	EE000794 PW	3650	898.43							898.43
I	505	EE000794 PW	3650	1,782.20							1,782.20
S	201	EE000801 PW	3650	2,786.65							2,786.65
I	505	EE000801 PW	3650	13,060.21							13,060.21
S	201	EE000806 PW	3650	151.12							151.12
S	201	EE000807 PW	3650	3,523.69							3,523.69
I	505	EE000807 PW	3650	5,700.00							5,700.00
S	201	EE000812 PW	3650	829.58							829.58
I	505	EE000812 PW	3650	7,478.46							7,478.46
S	201	EE000813 PW	3650	996.66							996.66
I	505	EE000813 PW	3650	2,630.00							2,630.00
S	201	EE000816 PW	3650	4,952.70							4,952.70
I	505	EE000816 PW	3650	6,880.00							6,880.00
S	201	EE000832 PW	3650	549.81							549.81
I	505	EE000832 PW	3650	1,367.50							1,367.50
S	201	EE000833 PW	3650	549.81							549.81
I	505	EE000833 PW	3650	1,367.50							1,367.50
S	201	EE000842 PW	3650	3,937.20							3,937.20
I	501	EE000842 PW	3650	323.44							323.44
I	505	EE000842 PW	3650	5,160.65							5,160.65
S	201	EE000843 PW	3650	1,302.23							1,302.23
I	501	EE000843 PW	3650	304.16							304.16
S	201	EE000860 PW	3650	3,238.46							3,238.46
I	501	EE000860 PW	3650	164.90							164.90
I	505	EE000860 PW	3650	13,408.38							13,408.38
I	521	EE000860 PW	3650	130.69							130.69
S	201	EE000862 PW	3650	82.75							82.75
I	505	EE000862 PW	3650	1,805.00							1,805.00
S	201	EE000874 PW	3650	1,592.67							1,592.67
I	501	EE000874 PW	3650	3,120.18							3,120.18
S	201	EE000883 PW	3650	1,085.68							1,085.68
I	505	EE000883 PW	3650	4,261.50							4,261.50
I	205	EE003045	3650	155.88							155.88
I	505	EE003631	3650	(986.35)							(986.35)
I	505	EE004648	3650	(2,684.00)							(2,684.00)
S	201	EE006622	3650	(718.12)							(718.12)
I	205	EE018788	3650	448.21							448.21
S	201	EE028758	3650	17.14							17.14
S	201	EE029028	3650	90.42							90.42
I	501	EE029028	3650	450.00							450.00
S	201	EE029856	3650	17.14							17.14
S	201	EE037543	3650	(1,520.64)							(1,520.64)
S	201	EE058943	3650	(78.02)							(78.02)
S	201	EE060310	3650	91.56							91.56
S	201	EE062595	3650	(0.00)							(0.00)
S	201	EE065421	3650	462.92							462.92
I	501	EE065421	3650	152.74							152.74
S	201	EE065546	3650	795.47							795.47
I	501	EE065546	3650	1,000.00							1,000.00
S	201	EE067390	3650	357.36							357.36
S	201	EE067396	3650	344.51							344.51
S	201	EE067896	3650	339.80							339.80
S	201	EE068865	3650	(0.00)							(0.00)
I	501	EE068865	3650	107.81							107.81
S	201	EE070783	3650	631.98							631.98

Hawaii Electric Light Company, Inc.
State ITC (eligible cost types 2xx, 5xx; closed to plant)
For Year 2005

Jnl Cd	EE	WO	Acct	Amount	ROW	S&I	land	auto limit (a)	interco billing	direct overheads	SITC basis
I	501	EE070783	3650	71.87							71.87
I	505	EE070783	3650	1,650.00							1,650.00
S	201	EE071337	3650	98.58							98.58
I	501	EE071337	3650	71.87							71.87
I	505	EE071337	3650	411.89							411.89
S	201	EE071340	3650	95.23							95.23
I	501	EE071340	3650	535.94							535.94
S	201	EE071345	3650	101.82							101.82
I	501	EE071345	3650	6,267.38							6,267.38
S	201	EE071397	3650	135.68							135.68
I	501	EE071397	3650	71.87							71.87
I	505	EE071397	3650	411.89							411.89
S	201	EE071399	3650	117.87							117.87
I	501	EE071399	3650	71.87							71.87
I	505	EE071399	3650	411.89							411.89
S	201	EE071401	3650	87.61							87.61
I	501	EE071401	3650	107.81							107.81
I	505	EE071401	3650	308.91							308.91
S	201	EE071405	3650	90.28							90.28
I	501	EE071405	3650	107.81							107.81
S	201	EE071528	3650	352.51							352.51
I	501	EE071528	3650	107.81							107.81
I	505	EE071528	3650	1,000.00							1,000.00
S	201	EE071703	3650	461.38							461.38
I	501	EE071703	3650	6,107.01							6,107.01
S	201	EE071740	3650	165.18							165.18
I	501	EE071740	3650	44.93							44.93
I	505	EE071740	3650	205.94							205.94
I	505	EE073593	3650	285.15							285.15
S	201	EE074390	3650	410.26							410.26
S	201	EE075080	3650	233.38							233.38
I	505	EE075080	3650	1,244.07							1,244.07
S	201	EE075131	3650	265.31							265.31
S	201	EE075602	3650	320.15							320.15
I	505	EE075602	3650	1,741.49							1,741.49
S	201	EE076182	3650	220.74							220.74
S	201	EE076327	3650	289.62							289.62
S	201	EE076619	3650	341.22							341.22
I	505	EE076619	3650	500.00							500.00
S	201	EE076785	3650	142.78							142.78
I	501	EE076785	3650	287.50							287.50
I	505	EE076785	3650	221.49							221.49
S	201	EE078319	3650	624.94							624.94
S	201	EE079751	3650	208.73							208.73
S	201	H0000079	3650	-							-
S	201	H0000447	3650	1,570.06							1,570.06
I	501	H0000447	3650	2,530.28							2,530.28
S	201	H0000947	3650	(2,442.15)							(2,442.15)
S	201	H0001011	3650	349.65							349.65
S	201	H0001029	3650	19,480.31							19,480.31
I	501	H0001029	3650	10,687.57							10,687.57
I	505	H0001029	3650	2,348.75							2,348.75
S	201	H0001044	3650	2,624.24							2,624.24
I	505	H0001044	3650	3,446.00							3,446.00
S	201	H0001068	3650	1,474.97							1,474.97
M	201	H0001072	3650	253.71						253.71	-
P	201	H0001072	3650	1,414.25							1,414.25
Q	201	H0001072	3650	(2.43)							(2.43)
S	201	H0001072	3650	1,268.82							1,268.82
I	205	H0001072	3650	1,986.65							1,986.65
I	501	H0001072	3650	39,354.70							39,354.70
I	506	H0001072	3650	11,553.19							11,553.19
S	201	H0001117	3650	10,559.36							10,559.36
I	501	H0001117	3650	2,366.80							2,366.80
I	505	H0001117	3650	9,950.00							9,950.00
S	201	H0001122	3650	2,212.46							2,212.46
I	505	H0001122	3650	9,400.00							9,400.00
S	201	H0001134	3650	9,298.63							9,298.63
I	505	H0001134	3650	14,400.00							14,400.00
S	201	H0001233	3650	2,567.68							2,567.68

Hawaii Electric Light Company, Inc.
State ITC (eligible cost types 2xx, 5xx; closed to plant)
For Year 2005

Jnl Cd	EE	WO	Acct	Amount	ROW	S&I	land	auto limit (a)	interco billing	direct overheads	SITC basis
I	505	H0001233	3650	12,356.35							12,356.35
S	201	H0001234	3650	25,691.49							25,691.49
I	501	H0001234	3650	60,207.89							60,207.89
I	505	H0001234	3650	90,367.21							90,367.21
S	201	H0001248	3650	1,189.40							1,189.40
I	501	H0001248	3650	1,307.53							1,307.53
S	201	H0001267	3650	15,476.03							15,476.03
I	501	H0001267	3650	2,138.25							2,138.25
I	505	H0001267	3650	10,175.00							10,175.00
S	201	H0001288	3650	117.23							117.23
S	201	H0001318	3650	18,473.00							18,473.00
I	501	H0001318	3650	1,473.43							1,473.43
S	201	H0001343	3650	495.74							495.74
I	505	H0001343	3650	682.00							682.00
M	201	H0005269 PW	3650	5,296.96						5,296.96	-
P	201	H0005269 PW	3650	50,834.50							50,834.50
S	201	H0005269 PW	3650	41,135.47							41,135.47
I	205	H0005269 PW	3650	298.17							298.17
I	501	H0005269 PW	3650	5,151.85							5,151.85
I	505	H0005269 PW	3650	245,730.06							245,730.06
M	505	H0005269 PW	3650	(0.00)						(0.00)	-
S	201	H0007204 PW	3650	(271.46)							(271.46)
I	505	H0007204 PW	3650	500.00							500.00
I	501	H0007411 PW	3650	(63.54)							(63.54)
S	201	H0013333 PW	3650	5,685.73							5,685.73
I	501	H0013333 PW	3650	802.85							802.85
I	505	H0013333 PW	3650	8,618.02							8,618.02
I	501	H0013821 PW	3650	(525.00)							(525.00)
S	201	H0014195 PW	3650	17.14							17.14
I	501	H0014425 PW	3650	2,199.74							2,199.74
I	505	H0014425 PW	3650	4,982.33							4,982.33
S	201	H0015149 PW	3650	9,761.93							9,761.93
I	501	H0015149 PW	3650	7,614.89							7,614.89
S	201	H0016123 PW	3650	-							-
S	201	H0016404 PW	3650	1,894.19							1,894.19
I	501	H0016404 PW	3650	627.34							627.34
I	505	H0016404 PW	3650	9,845.65							9,845.65
S	201	H0016921 PW	3650	171.22							171.22
I	501	H0016921 PW	3650	575.00							575.00
S	201	H0016969 PW	3650	122.32							122.32
I	505	H0016969 PW	3650	400.00							400.00
S	201	H0017883 PW	3650	2,146.87							2,146.87
I	505	H0017883 PW	3650	2,988.19							2,988.19
S	201	H0018777 PW	3650	1,572.59							1,572.59
I	505	H0018777 PW	3650	7,993.28							7,993.28
I	505	H0019039 PW	3650	8,320.00							8,320.00
I	501	H0019068 PW	3650	377.34							377.34
S	201	H0019091 PW	3650	355.30							355.30
I	505	H0019091 PW	3650	1,512.48							1,512.48
I	505	H0019746 PW	3650	790.00							790.00
S	201	H0019973 PW	3650	137.14							137.14
S	201	H0020043 PW	3650	(40.57)							(40.57)
I	505	H0020043 PW	3650	(1,320.00)							(1,320.00)
I	505	H0020258 PW	3650	3,112.00							3,112.00
S	201	H0020593 PW	3650	(331.32)							(331.32)
I	501	H0020593 PW	3650	380.21							380.21
I	505	H0020593 PW	3650	4,835.97							4,835.97
S	201	H0020665 PW	3650	5,830.71							5,830.71
I	501	H0020665 PW	3650	431.25							431.25
I	505	H0020665 PW	3650	3,605.96							3,605.96
S	201	H0021064 PW	3650	1,943.02							1,943.02
I	501	H0021064 PW	3650	215.62							215.62
I	505	H0021064 PW	3650	2,675.00							2,675.00
S	201	H0021149 PW	3650	3,414.76							3,414.76
I	505	H0021149 PW	3650	16,634.00							16,634.00
M	505	H0021149 PW	3650	(0.00)						(0.00)	-
S	201	H0021382 PW	3650	151.82							151.82
S	201	H0021704 PW	3650	284.40							284.40
I	501	H0021704 PW	3650	844.19							844.19
S	201	H0021954 PW	3650	1,133.05							1,133.05
I	505	H0021954 PW	3650	5,474.00							5,474.00

Hawaii Electric Light Company, Inc.
State ITC (eligible cost types 2xx, 5xx; closed to plant)
For Year 2005

Jnl Cd	EE	WO	Acct	Amount	ROW	S&I	land	auto limit (a)	interco billing	direct overheads	SITC basis
S	201	H0022465 PW	3650	4,010.04							4,010.04
I	501	H0022465 PW	3650	4,250.00							4,250.00
I	505	H0022465 PW	3650	4,500.00							4,500.00
S	201	H0022805 PW	3650	1,228.85							1,228.85
I	501	H0022805 PW	3650	449.14							449.14
S	201	H0022926 PW	3650	317.51							317.51
S	201	H0022946 PW	3650	852.85							852.85
I	505	H0022946 PW	3650	1,400.00							1,400.00
S	201	H0023103 PW	3650	161.43							161.43
S	201	H0023135 PW	3650	42.31							42.31
M	501	H0023135 PW	3650	(0.00)						(0.00)	-
I	505	H0023135 PW	3650	500.00							500.00
S	201	H0023487 PW	3650	1,195.09							1,195.09
I	505	H0023487 PW	3650	1,300.00							1,300.00
S	201	H0023489 PW	3650	-							-
S	201	H0023755 PW	3650	828.67							828.67
I	501	H0023755 PW	3650	209.11							209.11
I	505	H0023755 PW	3650	2,600.00							2,600.00
S	201	H0023756 PW	3650	384.89							384.89
I	505	H0023756 PW	3650	600.00							600.00
S	201	H0024040 PW	3650	3,243.66							3,243.66
I	501	H0024040 PW	3650	12,105.14							12,105.14
S	201	H0024399 PW	3650	3,111.53							3,111.53
I	501	H0024399 PW	3650	251.56							251.56
I	505	H0024399 PW	3650	1,150.00							1,150.00
S	201	H0024519 PW	3650	668.11							668.11
I	501	H0024519 PW	3650	133.07							133.07
I	505	H0024519 PW	3650	1,600.00							1,600.00
S	201	H0024568 PW	3650	(0.00)							(0.00)
S	201	H0024649 PW	3650	266.42							266.42
I	501	H0024649 PW	3650	143.75							143.75
S	201	H0024928 PW	3650	4,730.95							4,730.95
I	501	H0024928 PW	3650	700.77							700.77
I	505	H0024928 PW	3650	3,575.00							3,575.00
S	201	H0025077 PW	3650	510.15							510.15
I	501	H0025077 PW	3650	161.72							161.72
S	201	H0025082 PW	3650	540.89							540.89
I	505	H0025082 PW	3650	1,200.00							1,200.00
S	201	H0025257 PW	3650	201.39							201.39
S	201	H0025445 PW	3650	-							-
S	201	H0025557 PW	3650	366.19							366.19
I	505	H0025557 PW	3650	3,444.15							3,444.15
S	201	H0025566 PW	3650	300.49							300.49
S	201	H0025612 PW	3650	98.96							98.96
I	501	H0025612 PW	3650	5,010.82							5,010.82
S	201	H0025666 PW	3650	345.81							345.81
S	201	H0025719 PW	3650	86.78							86.78
I	501	H0025719 PW	3650	71.87							71.87
I	505	H0025719 PW	3650	205.94							205.94
S	201	H0025779 PW	3650	305.84							305.84
S	201	H0025858 PW	3650	7,048.38							7,048.38
I	505	H0025858 PW	3650	1,620.00							1,620.00
S	201	H0025908 PW	3650	584.27							584.27
S	201	H0027107 PW	3650	810.45							810.45
I	501	H0027107 PW	3650	107.81							107.81
I	505	H0027107 PW	3650	2,350.00							2,350.00
S	201	H0027145 PW	3650	2,062.89							2,062.89
I	505	H0027145 PW	3650	6,331.28							6,331.28
S	201	H0027316 PW	3650	934.73							934.73
S	201	H0027323 PW	3650	325.06							325.06
I	501	H0027323 PW	3650	1,305.00							1,305.00
S	201	H0028589 PW	3650	2,147.66							2,147.66
I	505	H0028589 PW	3650	2,011.16							2,011.16
M	501	PR009455	3650	2,039.78						2,039.78	-
S	201	TD000032 PW	3650	-							-
S	201	TD003901	3650	53.24							53.24
S	201	TD004077	3650	2,428.61							2,428.61
I	501	TD010900	3650	(0.00)							(0.00)
I	501	TD011183	3650	(215.62)							(215.62)
S	201	TD013731	3650	(465.72)							(465.72)
S	201	TD013748	3650	(78.94)							(78.94)
S	201	TD013750	3650	(183.91)							(183.91)

Hawaii Electric Light Company, Inc.
State ITC (eligible cost types 2xx, 5xx; closed to plant)
For Year 2005

Jnt Cd	EE	WO	Acct	Amount	ROW	S&I	land	auto limit (a)	interco billing	direct overheads	SITC basis
S	201	TD013757	3650	(221.57)							(221.57)
I	501	TD014124	3650	(446.00)							(446.00)
I	505	TD014356	3650	(650.00)							(650.00)
S	201	TD015230	3650	(0.00)							(0.00)
I	501	TD015230	3650	(0.00)							(0.00)
I	205	TD015354	3650	-							-
I	501	TD015820	3650	(50.78)							(50.78)
S	201	TD015908	3650	30.75							30.75
S	201	TD016190	3650	(158.47)							(158.47)
S	201	TD016921	3650	229.00							229.00
S	201	TD017019	3650	(57.82)							(57.82)
I	501	TD017019	3650	(220.05)							(220.05)
S	201	TD017301	3650	-							-
I	501	TD018910	3650	118.49							118.49
I	501	TD019179	3650	143.75							143.75
S	201	TD019224	3650	63.82							63.82
S	201	TD019510	3650	(0.00)							(0.00)
I	501	TD019510	3650	(0.00)							(0.00)
S	201	TD019514	3650	(65.92)							(65.92)
I	501	TD019514	3650	71.87							71.87
S	201	TD019696	3650	(0.00)							(0.00)
S	201	TD019698	3650	126.40							126.40
I	501	TD019702	3650	(0.00)							(0.00)
S	201	TD019707	3650	32.98							32.98
S	201	TD019804	3650	32.98							32.98
S	201	TD019889	3650	(116.21)							(116.21)
I	501	TD019889	3650	143.75							143.75
S	201	TD019932	3650	63.82							63.82
S	201	TD019949	3650	(40.53)							(40.53)
S	201	TD019981	3650	113.27							113.27
S	201	TD020394	3650	54.45							54.45
M	201	TD020509	3650	233.84						233.84	-
P	201	TD020509	3650	2,244.20							2,244.20
S	201	TD020509	3650	235.01							235.01
I	205	TD020509	3650	119.03							119.03
S	201	TD020729	3650	140.89							140.89
I	501	TD020847	3650	1,198.15							1,198.15
S	201	TD020862	3650	85.32							85.32
I	501	TD020862	3650	89.84							89.84
S	201	TD021419	3650	92.58							92.58
S	201	TD021505	3650	32.79							32.79
I	501	TD021505	3650	71.87							71.87
S	201	TD021983	3650	28.38							28.38
S	201	TD022048	3650	148.67							148.67
I	501	WH898150	3650	(202.45)							(202.45)
M	505	WI734130	3650	(101.23)						(101.23)	-
M	501	WI779100	3650	(1,120.00)						(1,120.00)	-
I	501	WI850140	3650	(295.88)							(295.88)
S	201	00004339 PW	3660	98.04							98.04
I	505	EE000772 PW	3660	1,980.00							1,980.00
I	501	EE010463	3660	108.86							108.86
S	201	EE056066	3660	531.69							531.69
S	201	EE067524	3660	23,456.12							23,456.12
I	501	EE067524	3660	5,500.00							5,500.00
S	201	EE069769	3660	61,194.65							61,194.65
I	501	EE069769	3660	627.34							627.34
S	201	H0021953 PW	3660	-							-
S	201	00000004 PW	3670	(228.01)							(228.01)
I	501	00000004 PW	3670	(1,134.00)							(1,134.00)
S	201	00000792 PW	3670	(1,171.61)							(1,171.61)
S	201	00000883 PW	3670	(108.64)							(108.64)
I	505	00001453 PW	3670	(243.50)							(243.50)
S	201	00004337 PW	3670	(981.49)							(981.49)
S	201	00004394 PW	3670	(236.50)							(236.50)
S	201	00005006 PW	3670	(129.95)							(129.95)
S	201	00005525 PW	3670	18,984.27							18,984.27
I	501	00005525 PW	3670	1,606.63							1,606.63
I	505	00005525 PW	3670	311.69							311.69
S	201	00006061 PW	3670	19,078.05							19,078.05
S	201	00006894 PW	3670	9,595.31							9,595.31

Hawaii Electric Light Company, Inc.
State ITC (eligible cost types 2xx, 5xx; closed to plant)
For Year 2005

Jnl Cd	EE	WO	Acct	Amount	ROW	S&I	land	auto limit (a)	interco billing	direct overheads	SITC basis
I	505	00006894 PW	3670	33,029.69							33,029.69
I	501	00007242 PW	3670	190.10							190.10
S	201	00007516 PW	3670	177.70							177.70
S	201	00007615 PW	3670	319.45							319.45
S	201	00007740 PW	3670	957.82							957.82
S	201	00007887 PW	3670	3,505.20							3,505.20
S	201	00008065 PW	3670	362.57							362.57
I	505	00008065 PW	3670	3,125.00							3,125.00
S	201	00008071 PW	3670	5,962.59							5,962.59
I	505	00008071 PW	3670	5,865.00							5,865.00
S	201	00008130 PW	3670	90.17							90.17
S	201	00008160 PW	3670	163.41							163.41
S	201	00008206 PW	3670	17,063.08							17,063.08
I	505	00008206 PW	3670	400.00							400.00
I	501	EE000276	3670	(1,496.00)							(1,496.00)
M	550	EE029161	3670	5,163.97						5,163.97	-
S	201	EE048568	3670	4,399.01							4,399.01
S	201	EE055624	3670	6,077.46							6,077.46
I	501	EE055624	3670	557.02							557.02
S	201	EE056876	3670	(0.00)							(0.00)
S	201	EE058115	3670	-							-
S	201	EE059085	3670	77.32							77.32
S	201	EE061108	3670	1,206.45							1,206.45
S	201	EE062321	3670	-							-
I	501	EE063326	3670	177.39							177.39
I	201	EE063667	3670	-							-
M	201	EE063667	3670	(0.00)						(0.00)	-
P	201	EE063667	3670	(0.00)							(0.00)
S	201	EE063667	3670	-							-
S	201	EE064003	3670	(5,622.05)							(5,622.05)
I	501	EE064058	3670	342.19							342.19
S	201	EE064240	3670	1,256.69							1,256.69
S	201	EE064655	3670	757.23							757.23
I	505	EE064655	3670	4,773.27							4,773.27
S	201	EE064769	3670	8.79							8.79
S	201	EE065434	3670	(0.00)							(0.00)
S	201	EE065773	3670	1,239.31							1,239.31
S	201	EE065899	3670	6,018.62							6,018.62
S	201	EE069474	3670	9.49							9.49
S	201	EE070656	3670	670.40							670.40
M	201	EE073484	3670	(0.00)						(0.00)	-
P	201	EE073484	3670	-							-
S	201	EE073484	3670	-							-
S	201	EE074112	3670	1,195.50							1,195.50
I	501	EE074112	3670	10,277.48							10,277.48
M	501	EE074112	3670	(0.00)						(0.00)	-
S	201	EE074912	3670	9,923.58							9,923.58
S	201	EE075351	3670	2,630.47							2,630.47
S	201	EE075875	3670	1,990.51							1,990.51
S	201	EE077558	3670	2,189.11							2,189.11
M	501	EE077558	3670	6,199.95						6,199.95	-
S	201	EE077689	3670	2,607.72							2,607.72
S	201	EE078404	3670	4,150.42							4,150.42
M	501	EE078404	3670	2,066.65						2,066.65	-
S	201	EE079032	3670	1,502.03							1,502.03
S	201	EE079311	3670	2,227.29							2,227.29
S	201	EE079786	3670	18,034.44							18,034.44
S	201	EE079787	3670	1,079.13							1,079.13
S	201	H0000342	3670	717,745.90							717,745.90
I	205	H0000342	3670	1,679.89							1,679.89
I	501	H0000342	3670	2,039.76							2,039.76
I	505	H0000342	3670	60,384.10							60,384.10
I	521	H0000342	3670	1,269.00							1,269.00
I	501	H0000359 PW	3670	4.99							4.99
S	201	H0000648	3670	19,514.96							19,514.96
I	505	H0000648	3670	481,871.17							481,871.17
M	201	H0000838	3670	586.78						586.78	-
P	201	H0000838	3670	3,590.82							3,590.82
S	201	H0000838	3670	51,174.69							51,174.69

Hawaii Electric Light Company, Inc.
State ITC (eligible cost types 2xx, 5xx; closed to plant)
For Year 2005

Jnl Cd	EE	WO	Acct	Amount	ROW	S&I	land	auto limit (a)	interco billing	direct overheads	SITC basis
I	501	H0000838	3670	7,061.05							7,061.05
M	201	H0000839	3670	335.63						335.63	-
P	201	H0000839	3670	1,881.36							1,881.36
S	201	H0000957	3670	-							-
M	201	H0001048	3670	11,138.57						11,138.57	-
P	201	H0001048	3670	46,925.84							46,925.84
S	201	H0001048	3670	287,606.73							287,606.73
I	501	H0001048	3670	53,588.60							53,588.60
M	501	H0001048	3670	(0.00)						(0.00)	-
I	505	H0001048	3670	64,953.95							64,953.95
M	505	H0001048	3670	50,000.00						50,000.00	-
I	550	H0001048	3670	382.50					382.50		-
S	201	H0001052	3670	18,801.89							18,801.89
I	201	H0001053	3670	1,378.29							1,378.29
M	201	H0001053	3670	1,916.63						1,916.63	-
P	201	H0001053	3670	13,309.92							13,309.92
S	201	H0001057	3670	-							-
I	201	H0001058	3670	1,134.84							1,134.84
M	201	H0001058	3670	1,916.63						1,916.63	-
P	201	H0001058	3670	13,309.92							13,309.92
Q	201	H0001058	3670	289.38							289.38
S	201	H0001058	3670	60,982.61							60,982.61
I	501	H0001058	3670	39,977.56							39,977.56
M	501	H0001058	3670	(0.00)						(0.00)	-
I	505	H0001058	3670	27,247.19							27,247.19
S	201	H0001090	3670	6,668.36							6,668.36
S	201	H0001097	3670	5,235.61							5,235.61
I	505	H0001097	3670	500.00							500.00
S	201	H0001112	3670	12,494.57							12,494.57
S	201	H0001121	3670	1,200.58							1,200.58
M	501	H0001121	3670	109,900.00						109,900.00	-
S	201	H0001123	3670	4,184.48							4,184.48
S	201	H0001126	3670	84,593.72							84,593.72
S	201	H0001132	3670	9,292.97							9,292.97
I	505	H0001132	3670	1,500.00							1,500.00
M	201	H0001232	3670	226.76						226.76	-
P	201	H0001232	3670	2,176.20							2,176.20
S	201	H0001232	3670	71,884.09							71,884.09
I	501	H0001232	3670	13,611.03							13,611.03
M	501	H0001232	3670	(0.00)						(0.00)	-
I	505	H0001232	3670	216,194.19							216,194.19
S	201	H0001252	3670	5,518.85							5,518.85
I	501	H0001252	3670	1,568.36							1,568.36
I	505	H0001252	3670	456.25							456.25
S	201	H0001266	3670	27,224.23							27,224.23
I	505	H0001266	3670	77,018.05							77,018.05
M	505	H0001266	3670	(50,000.00)						(50,000.00)	-
S	201	H0001269	3670	39,942.97							39,942.97
I	501	H0001269	3670	16,522.44							16,522.44
M	501	H0001269	3670	(0.00)						(0.00)	-
I	505	H0001269	3670	2,386.63							2,386.63
S	201	H0001275	3670	5,719.59							5,719.59
S	201	H0001291	3670	15,101.62							15,101.62
I	501	H0001291	3670	23,603.49							23,603.49
M	501	H0001291	3670	(0.00)						(0.00)	-
S	201	H0001292	3670	22,465.91							22,465.91
I	505	H0001292	3670	164,742.78							164,742.78
S	201	H0001296	3670	91,215.54							91,215.54
M	501	H0001296	3670	24,799.81						24,799.81	-
I	505	H0001296	3670	5,316.77							5,316.77
S	201	H0001297	3670	20,780.12							20,780.12
I	505	H0001297	3670	134,987.83							134,987.83
S	201	H0001304	3670	7,306.37							7,306.37
I	501	H0001304	3670	12,846.85							12,846.85
M	501	H0001304	3670	(0.00)						(0.00)	-
M	201	H0001306	3670	6.23						6.23	-
P	201	H0001306	3670	59.79							59.79
S	201	H0001306	3670	53,739.67							53,739.67
I	505	H0001306	3670	347,424.53							347,424.53
S	201	H0001308	3670	9,891.27							9,891.27

Hawaii Electric Light Company, Inc.
State ITC (eligible cost types 2xx, 5xx; closed to plant)
For Year 2005

Jnl Cd	EE	WO	Acct	Amount	ROW	S&I	land	auto limit (a)	Interco billing	direct overheads	SITC basis
I	505	H0001308	3670	55,097.03							55,097.03
S	201	H0001314	3670	26,606.43							26,606.43
I	505	H0001314	3670	26,364.22							26,364.22
S	201	H0001315	3670	15,862.88							15,862.88
S	201	H0001319	3670	10,635.17							10,635.17
I	201	H0001323	3670	798.96							798.96
M	201	H0001323	3670	1,386.89						1,386.89	-
P	201	H0001323	3670	13,309.92							13,309.92
S	201	H0001323	3670	3,414.97							3,414.97
M	501	H0001323	3670	6,199.95						6,199.95	-
S	201	H0001324	3670	5,015.07							5,015.07
S	201	H0001327	3670	5,151.62							5,151.62
S	201	H0001328	3670	12,987.02							12,987.02
S	201	H0001335	3670	12,625.44							12,625.44
S	201	H0001336	3670	47,356.80							47,356.80
S	201	H0001337	3670	34,908.37							34,908.37
I	505	H0001337	3670	26,090.08							26,090.08
M	201	H0001345	3670	2,533.30						2,533.30	-
P	201	H0001345	3670	14,634.88							14,634.88
S	201	H0001345	3670	23,661.94							23,661.94
S	201	H0002375 PW	3670	-							-
I	205	H0002375 PW	3670	(0.00)							(0.00)
S	201	H0007862 PW	3670	11.96							11.96
S	201	H0008110 PW	3670	3,402.68							3,402.68
S	201	H0009405 PW	3670	(0.00)							(0.00)
I	201	H0009969 PW	3670	(1,378.29)							(1,378.29)
M	201	H0009969 PW	3670	(1,916.63)						(1,916.63)	-
P	201	H0009969 PW	3670	(13,309.92)							(13,309.92)
S	201	H0010244 PW	3670	-							-
M	201	H0012715 PW	3670	(0.00)						(0.00)	-
P	201	H0012715 PW	3670	(0.00)							(0.00)
S	201	H0012778 PW	3670	2,502.10							2,502.10
S	201	H0013849 PW	3670	(7,736.01)							(7,736.01)
S	201	H0014064 PW	3670	2,805.34							2,805.34
I	205	H0014064 PW	3670	282.41							282.41
M	205	H0014064 PW	3670	(18.50)						(18.50)	-
I	505	H0014064 PW	3670	3,015.00							3,015.00
S	201	H0014409 PW	3670	(0.00)							(0.00)
S	201	H0014570 PW	3670	4,455.34							4,455.34
S	201	H0014872 PW	3670	5,124.58							5,124.58
S	201	H0014892 PW	3670	7,242.79							7,242.79
S	201	H0015181 PW	3670	-							-
S	201	H0015352 PW	3670	8,823.14							8,823.14
S	201	H0015408 PW	3670	955.27							955.27
M	201	H0015516 PW	3670	5,845.17						5,845.17	-
P	201	H0015516 PW	3670	14,634.88							14,634.88
S	201	H0015516 PW	3670	(0.00)							(0.00)
S	201	H0015639 PW	3670	71.45							71.45
I	201	H0015653 PW	3670	(0.00)							(0.00)
M	201	H0015653 PW	3670	(0.00)						(0.00)	-
P	201	H0015653 PW	3670	(0.00)							(0.00)
Q	201	H0015653 PW	3670	(0.00)							(0.00)
S	201	H0015653 PW	3670	-							-
S	201	H0015660 PW	3670	-							-
S	201	H0016062 PW	3670	(0.00)							(0.00)
S	201	H0016360 PW	3670	-							-
S	201	H0016484 PW	3670	(0.00)							(0.00)
I	201	H0017031 PW	3670	22.50							22.50
S	201	H0017031 PW	3670	25,213.50							25,213.50
S	201	H0017102 PW	3670	1,053.05							1,053.05
S	201	H0017131 PW	3670	2,544.19							2,544.19
I	205	H0017131 PW	3670	18.09							18.09
S	201	H0017413 PW	3670	(0.00)							(0.00)
S	201	H0017921 PW	3670	(0.00)							(0.00)
I	501	H0017921 PW	3670	-							-
M	501	H0017921 PW	3670	(0.00)						(0.00)	-
I	505	H0017921 PW	3670	-							-
S	201	H0018087 PW	3670	12,268.12							12,268.12
S	201	H0018166 PW	3670	-							-
S	201	H0018225 PW	3670	(0.00)							(0.00)
M	201	H0018290 PW	3670	(0.00)						(0.00)	-

Hawaii Electric Light Company, Inc.
State ITC (eligible cost types 2xx, 5xx; closed to plant)
For Year 2005

Jnl Cd	EE	WO	Acct	Amount	ROW	S&I	land	auto limit (s)	interco billing	direct overheads	SITC basis
P	201	H0018290 PW	3670	-							-
S	201	H0018324 PW	3670	2,896.90							2,896.90
I	205	H0018324 PW	3670	60.28							60.28
M	201	H0018348 PW	3670	(0.00)						(0.00)	-
P	201	H0018348 PW	3670	(0.00)							(0.00)
S	201	H0018348 PW	3670	(0.00)							(0.00)
I	550	H0018348 PW	3670	(0.00)					(0.00)		-
S	201	H0018412 PW	3670	1,133.49							1,133.49
S	201	H0018472 PW	3670	-							-
M	201	H0019003 PW	3670	1,524.95						1,524.95	-
P	201	H0019003 PW	3670	14,634.88							14,634.88
S	201	H0019003 PW	3670	68,571.88							68,571.88
I	501	H0019003 PW	3670	456.25							456.25
M	201	H0019070 PW	3670	5,845.17						5,845.17	-
P	201	H0019070 PW	3670	14,634.88							14,634.88
S	201	H0019070 PW	3670	(0.00)							(0.00)
S	201	H0019174 PW	3670	3,349.46							3,349.46
S	201	H0019727 PW	3670	2,514.74							2,514.74
I	501	H0019727 PW	3670	539.06							539.06
S	201	H0019884 PW	3670	(0.00)							(0.00)
S	201	H0019941 PW	3670	-							-
S	201	H0020026 PW	3670	3,936.92							3,936.92
M	201	H0020142 PW	3670	11,748.79						11,748.79	-
P	201	H0020142 PW	3670	29,416.11							29,416.11
S	201	H0020142 PW	3670	-							-
S	201	H0020218 PW	3670	749.79							749.79
S	201	H0020279 PW	3670	4,045.71							4,045.71
I	501	H0020279 PW	3670	215.62							215.62
S	201	H0020437 PW	3670	(0.00)							(0.00)
S	201	H0020556 PW	3670	3,720.33							3,720.33
S	201	H0020675 PW	3670	-							-
S	201	H0020730 PW	3670	381.50							381.50
S	201	H0021115 PW	3670	8,750.03							8,750.03
I	501	H0021115 PW	3670	619.93							619.93
I	505	H0021115 PW	3670	4,788.68							4,788.68
S	201	H0021185 PW	3670	(0.00)							(0.00)
S	201	H0021447 PW	3670	10,361.02							10,361.02
S	201	H0021949 PW	3670	3,108.74							3,108.74
S	201	H0021992 PW	3670	472.17							472.17
S	201	H0022117 PW	3670	(0.00)							(0.00)
S	201	H0022313 PW	3670	1,528.74							1,528.74
S	201	H0022550 PW	3670	2,288.81							2,288.81
S	201	H0022974 PW	3670	2,140.83							2,140.83
S	201	H0023033 PW	3670	94.34							94.34
S	201	H0023735 PW	3670	826.36							826.36
S	201	H0023736 PW	3670	817.88							817.88
M	201	H0023873 PW	3670	(0.00)						(0.00)	-
P	201	H0023873 PW	3670	(0.00)							(0.00)
S	201	H0023873 PW	3670	(0.00)							(0.00)
S	201	H0024185 PW	3670	13,389.38							13,389.38
S	201	H0024430 PW	3670	476.51							476.51
S	201	H0024554 PW	3670	692.06							692.06
S	201	H0024766 PW	3670	1,806.89							1,806.89
S	201	H0024790 PW	3670	728.68							728.68
M	201	H0025031 PW	3670	5,845.17						5,845.17	-
P	201	H0025031 PW	3670	14,634.88							14,634.88
S	201	H0025031 PW	3670	(0.00)							(0.00)
S	201	H0025463 PW	3670	559.12							559.12
S	201	H0025957 PW	3670	(0.00)							(0.00)
I	505	H0026387 PW	3670	6,006.41							6,006.41
S	201	H0026738 PW	3670	738.90							738.90
S	201	H0027584 PW	3670	563.87							563.87
M	201	10021	3680	491,666.11						491,666.11	-
P	201	10021	3680	2,934,084.23							2,934,084.23
Q	201	10021	3680	(924.51)							(924.51)
I	501	10021	3680	2,371.46							2,371.46
M	501	10021	3680	10,316.03						10,316.03	-
P	501	10021	3680	57,361.20							57,361.20
I	505	00003706 PW	3680	(825.00)							(825.00)
S	201	00007453 PW	3680	193.00							193.00
I	501	00007453 PW	3680	89.84							89.84

Hawaii Electric Light Company, Inc.
State ITC (eligible cost types 2xx, 5xx: closed to plant)
For Year 2005

Jnl Cd	EE	WO	Acct	Amount	ROW	S&I	land	auto limit (a)	interco billing	direct overheads	S/ITC basis
S	201	00007520 PW	3680	349.57							349.57
S	201	00007629 PW	3680	1,583.22							1,583.22
I	501	00007629 PW	3680	646.87							646.87
S	201	00007964 PW	3680	170.40							170.40
S	201	00008246 PW	3680	72.46							72.46
S	201	00008255 PW	3680	8.53							8.53
S	201	EE072128	3680	1,298.66							1,298.66
I	505	EE072128	3680	300.00							300.00
S	201	EE080340	3680	582.06							582.06
M	201	H0000933	3680	4,858.80						4,858.80	-
P	201	H0000933	3680	27,235.44							27,235.44
S	201	H0000933	3680	1,891.91							1,891.91
S	201	H0014667 PW	3680	152.14							152.14
I	501	H0014667 PW	3680	300.00							300.00
S	201	H0023509 PW	3680	254.15							254.15
I	501	H0023509 PW	3680	416.72							416.72
S	201	H0024379 PW	3680	352.30							352.30
I	501	H0024379 PW	3680	143.75							143.75
I	505	H0024379 PW	3680	376.93							376.93
S	201	H0025619 PW	3680	87.64							87.64
I	501	H0025619 PW	3680	6,339.25							6,339.25
S	201	TD019085	3680	(447.23)							(447.23)
I	205	TD019085	3680	(39.99)							(39.99)
S	201	00002001 PW	3691	10,392.01							10,392.01
I	501	00002001 PW	3691	4,042.94							4,042.94
I	501	00005042 PW	3691	143.75							143.75
I	505	00005042 PW	3691	1,950.00							1,950.00
S	201	00005709 PW	3691	6,119.70							6,119.70
I	501	00005709 PW	3691	700.77							700.77
I	505	00005709 PW	3691	7,000.00							7,000.00
S	201	00006132 PW	3691	-							-
S	201	00006215 PW	3691	-							-
I	501	00006215 PW	3691	8,424.20							8,424.20
M	501	00006215 PW	3691	(1,486.85)						(1,486.85)	-
S	201	00006716 PW	3691	1,971.71							1,971.71
I	501	00006716 PW	3691	1,143.30							1,143.30
I	505	00006716 PW	3691	1,600.00							1,600.00
I	505	00006863 PW	3691	1,850.00							1,850.00
S	201	00007811 PW	3691	157.54							157.54
I	501	00007811 PW	3691	143.75							143.75
I	505	00007811 PW	3691	5,360.35							5,360.35
S	201	00007869 PW	3691	12,285.94							12,285.94
I	501	00007869 PW	3691	2,073.74							2,073.74
I	505	00007869 PW	3691	14,193.20							14,193.20
S	201	00007948 PW	3691	38.66							38.66
S	201	00007979 PW	3691	54.99							54.99
S	201	00008056 PW	3691	243.40							243.40
S	201	00008078 PW	3691	272.14							272.14
S	201	EE000630 PW	3691	1,132.17							1,132.17
I	501	EE000630 PW	3691	161.72							161.72
I	505	EE000630 PW	3691	1,257.27							1,257.27
S	201	EE000739 PW	3691	24,824.69							24,824.69
I	501	EE000739 PW	3691	25,717.17							25,717.17
S	201	EE000845 PW	3691	83.60							83.60
I	505	EE000845 PW	3691	2,067.00							2,067.00
S	201	EE000864 PW	3691	552.63							552.63
I	501	EE000864 PW	3691	71.87							71.87
I	505	EE066873	3691	417.15							417.15
S	201	H0001263	3691	6,642.03							6,642.03
I	505	H0001263	3691	15,985.99							15,985.99
I	505	H0003680 PW	3691	(200.00)							(200.00)
S	201	H0017142 PW	3691	1,884.42							1,884.42
I	501	H0017142 PW	3691	287.50							287.50
I	505	H0017142 PW	3691	1,950.00							1,950.00
S	201	H0017882 PW	3691	5,704.53							5,704.53
S	201	H0017962 PW	3691	3,009.47							3,009.47
I	501	H0017962 PW	3691	287.50							287.50
I	505	H0017962 PW	3691	3,480.00							3,480.00
S	201	H0018717 PW	3691	226.94							226.94
M	201	H0019891 PW	3691	377.31						377.31	-

Hawaii Electric Light Company, Inc.
State ITC (eligible cost types 2xx, 5xx; closed to plant)
For Year 2005

Jnl Cd	EE	WO	Acct	Amount	ROW	S&I	land	auto limit (a)	interco billing	direct overheads	SITC basis
P	201	H0019891 PW	3691	2,488.42							2,488.42
S	201	H0019891 PW	3691	23,090.70							23,090.70
I	501	H0019891 PW	3691	32,736.18							32,736.18
S	201	H0020956 PW	3691	804.26							804.26
I	501	H0020956 PW	3691	2,965.62							2,965.62
I	505	H0020956 PW	3691	1,600.00							1,600.00
S	201	H0021089 PW	3691	383.91							383.91
I	501	H0021089 PW	3691	323.36							323.36
I	505	H0021089 PW	3691	600.00							600.00
S	201	H0021965 PW	3691	128.46							128.46
S	201	H0022755 PW	3691	1,991.19							1,991.19
I	501	H0022755 PW	3691	3,328.89							3,328.89
S	201	H0023398 PW	3691	681.26							681.26
I	501	H0023398 PW	3691	71.87							71.87
I	505	H0023398 PW	3691	1,325.00							1,325.00
S	201	H0024085 PW	3691	630.02							630.02
I	501	H0024085 PW	3691	143.75							143.75
I	505	H0024085 PW	3691	2,800.00							2,800.00
S	201	H0024342 PW	3691	5,521.08							5,521.08
I	501	H0024342 PW	3691	467.18							467.18
S	201	H0024767 PW	3691	358.07							358.07
I	505	H0024767 PW	3691	3,055.20							3,055.20
S	201	H0025482 PW	3691	1,555.70							1,555.70
I	501	H0025482 PW	3691	197.65							197.65
I	505	H0025482 PW	3691	2,550.00							2,550.00
S	201	H0025571 PW	3691	380.45							380.45
I	505	H0025571 PW	3691	3,337.22							3,337.22
S	201	H0026114 PW	3691	2,067.12							2,067.12
I	501	H0026114 PW	3691	2,054.53							2,054.53
S	201	H0026187 PW	3691	254.52							254.52
S	201	H0026893 PW	3691	1,001.26							1,001.26
I	505	H0026893 PW	3691	11,181.00							11,181.00
S	201	00005013 PW	3692	80.91							80.91
S	201	00008040 PW	3692	90.00							90.00
S	201	EE000643 PW	3692	2,336.30							2,336.30
I	501	EE000643 PW	3692	629.74							629.74
I	505	EE000643 PW	3692	3,068.97							3,068.97
I	501	EE038257	3692	(1,090.72)							(1,090.72)
S	201	H0014420 PW	3692	6,039.92							6,039.92
I	501	H0014420 PW	3692	7,315.23							7,315.23
S	201	H0021087 PW	3692	2,202.84							2,202.84
I	501	H0021087 PW	3692	179.69							179.69
I	505	H0021087 PW	3692	1,800.00							1,800.00
S	201	H1000000	3692	146,325.57							146,325.57
I	501	H1000000	3692	9,339.34							9,339.34
I	505	H1000000	3692	27,635.59							27,635.59
I	521	H1000000	3692	184.33							184.33
M	201	H1002000	3692	103.84						103.84	-
S	201	H1002000	3692	91,753.37							91,753.37
I	501	H1002000	3692	178,919.70							178,919.70
M	501	H1002000	3692	74.95						74.95	-
I	505	H1002000	3692	144,280.86							144,280.86
I	521	H1002000	3692	130.69							130.69
I	201	H1003000	3692	(0.00)							(0.00)
M	201	H1003000	3692	(0.00)						(0.00)	-
P	201	H1003000	3692	(0.00)							(0.00)
S	201	H1003000	3692	211,112.07							211,112.07
I	205	H1003000	3692	116.71							116.71
I	501	H1003000	3692	56,063.60							56,063.60
M	501	H1003000	3692	2,066.65						2,066.65	-
I	505	H1003000	3692	164,636.60							164,636.60
I	521	H1003000	3692	2,119.64							2,119.64
	201	WI479110	3692	1,603.51							1,603.51
I	505	WI867120	3692	(1,851.27)							(1,851.27)
S	201	00007697 PW	3700	14.58							14.58
M	201	FI000030 PW	3700	44,965.28						44,965.28	-
P	201	FI000030 PW	3700	214,454.14							214,454.14
S	201	FI000030 PW	3700	230.21							230.21
I	205	FI000030 PW	3700	132.76							132.76
M	201	SS001969	3700	2,262.98						2,262.98	-
P	201	SS001969	3700	5,665.92							5,665.92

Hawaii Electric Light Company, Inc.
State ITC (eligible cost types 2xx, 5xx; closed to plant)
For Year 2005

Jnl Cd	EE	WO	Acct	Amount	ROW	S&I	land	auto limit (a)	interco billing	direct overheads	SITC basis
I	501	AD000014 PW	3900	5,139.98		5,139.98					-
I	501	EE000747 PW	3900	(0.00)		(0.00)					-
I	505	EE000747 PW	3900	(0.00)		(0.00)					-
I	501	EE029956	3900	(325.00)		(325.00)					-
I	501	EE060540	3900	2,925.00		2,925.00					-
I	201	EE067805	3900	354.16							354.16
I	205	EE067805	3900	332.08							332.08
I	501	EE070608	3900	3,486.00		3,486.00					-
M	201	FI000956	3900	(0.00)						(0.00)	-
P	201	FI000956	3900	(0.00)							(0.00)
M	201	FI000965	3900	102.77						102.77	-
P	201	FI000965	3900	572.88							572.88
I	501	H0001106	3900	33,333.12		33,333.12					-
M	201	H1001000	3900	47,967.95						47,967.95	-
P	201	H1001000	3900	305,497.49							305,497.49
S	201	H1001000	3900	705.62							705.62
I	205	H1001000	3900	226.09							226.09
I	501	H1001000	3900	1,374.11							1,374.11
I	521	H1001000	3900	975.33							975.33
M	201	IS000105	3900	77.80						77.80	-
P	201	IS000105	3900	433.68							433.68
Q	201	IS000105	3900	(433.68)							(433.68)
I	201	IS000108	3900	59.06							59.06
M	201	IS000108	3900	3,632.86						3,632.86	-
P	201	IS000108	3900	28,667.23							28,667.23
Q	201	IS000108	3900	(379.95)							(379.95)
I	501	IS000108	3900	595.23							595.23
I	501	PR011032	3900	50,876.12		50,876.12					-
M	201	PR011587	3900	1,536.04						1,536.04	-
P	201	PR011587	3900	5,003.38							5,003.38
M	201	PR011675	3900	439.63						439.63	-
P	201	PR011675	3900	1,715.59							1,715.59
Q	201	PR011675	3900	(208.14)							(208.14)
M	201	PR011944	3900	1,364.95						1,364.95	-
P	201	PR011944	3900	7,808.37							7,808.37
M	201	PR011945	3900	1,373.84						1,373.84	-
P	201	PR011945	3900	7,693.77							7,693.77
I	501	PR011945	3900	161.20							161.20
I	501	PR012006	3900	29,337.53		29,337.53					-
I	201	PR012010	3900	8.72		8.72					-
M	201	PR012010	3900	1,344.46						1,344.46	-
P	201	PR012010	3900	7,536.59							7,536.59
I	205	PR012010	3900	1,523.90							1,523.90
I	501	PR012010	3900	2,325.00							2,325.00
M	201	PR012035	3900	223.78						223.78	-
P	201	PR012035	3900	1,247.38							1,247.38
M	201	PR012815	3900	603.35						603.35	-
P	201	PR012815	3900	5,790.26							5,790.26
M	201	SS001723	3900	(0.00)						(0.00)	-
I	205	SS001723	3900	417.88		417.88					-
I	501	SS001723	3900	1,800.00		1,800.00					-
M	201	TD012300	3900	204.07						204.07	-
P	201	TD012300	3900	608.52							608.52
I	501	TD021650	3900	9,500.00		9,500.00					-
S	201	AD000015 PW	3902	(1.39)		(1.39)					-
I	501	AD000015 PW	3902	58,296.64		58,296.64					-
M	501	AD000015 PW	3902	127.65						127.65	-
P	501	AD000015 PW	3902	711.57		711.57					-
I	501	H0000287	3902	48,885.09		48,885.09					-
I	501	H0000497	3902	387,960.10		387,960.10					-
M	501	H0000497	3902	143.52						143.52	-
P	501	H0000497	3902	829.11		829.11					-
I	501	PR006139	3902	(12,923.00)		(12,923.00)					-
I	501	TD013984	3902	5,903.45		5,903.45					-
I	501	TD015514	3902	3,650.00		3,650.00					-
M	201	AD000306	3911	953.02						953.02	-
P	201	AD000306	3911	4,329.52							4,329.52
Q	201	AD000306	3911	(204.27)							(204.27)
M	201	AD000371	3911	299.29						299.29	-

Hawaii Electric Light Company, Inc.
State ITC (eligible cost types 2xx, 5xx; closed to plant)
For Year 2005

Jnl Cd	EE	WO	Acct	Amount	ROW	S&I	land	auto limit (a)	interco billing	direct overheads	SITC basis
P	201	AD000371	3911	2,872.21							2,872.21
M	201	CS000633	3911	2,006.82						2,006.82	-
P	201	CS000633	3911	11,186.24							11,186.24
Q	201	CS000633	3911	(578.24)							(578.24)
M	201	CS000727	3911	925.97						925.97	-
P	201	CS000727	3911	5,729.37							5,729.37
I	205	CS000876	3911	326.55							326.55
M	201	CS000915	3911	443.14						443.14	-
P	201	CS000915	3911	3,420.91							3,420.91
I	201	CS000917	3911	298.00							298.00
M	201	CS000917	3911	987.52						987.52	-
P	201	CS000917	3911	7,965.70							7,965.70
M	201	FI000948	3911	25.67						25.67	-
P	201	FI000948	3911	143.11							143.11
Q	201	FI000948	3911	(143.11)							(143.11)
M	201	FI000962	3911	515.18						515.18	-
P	201	FI000962	3911	4,944.16							4,944.16
Q	201	FI000962	3911	(413.92)							(413.92)
I	501	FI000962	3911	396.00							396.00
M	201	FI000972	3911	278.19						278.19	-
P	201	FI000972	3911	1,607.14							1,607.14
I	205	FI000989	3911	468.71							468.71
M	201	H0000782	3911	893.32						893.32	-
P	201	H0000782	3911	5,645.12							5,645.12
Q	201	H0000782	3911	(36.40)							(36.40)
I	501	H0000782	3911	1,340.00							1,340.00
I	201	H0001045	3911	619.00							619.00
M	201	H0001045	3911	(10,790.64)						(10,790.64)	-
P	201	H0001045	3911	36,177.39							36,177.39
Q	201	H0001045	3911	(643.76)							(643.76)
I	201	HR000196	3911	(0.00)							(0.00)
M	201	HR000196	3911	1,259.80						1,259.80	-
P	201	HR000196	3911	6,596.72							6,596.72
M	201	HR000256	3911	473.55						473.55	-
P	201	HR000256	3911	3,321.32							3,321.32
M	201	IS000025	3911	(672.79)						(672.79)	-
P	201	IS000025	3911	(3,340.48)							(3,340.48)
I	501	IS000026	3911	(1,040.00)							(1,040.00)
I	501	IS000027	3911	(622.96)							(622.96)
M	201	IS000043	3911	(295.66)						(295.66)	-
P	201	IS000043	3911	(1,057.08)							(1,057.08)
I	501	IS000053	3911	599.00							599.00
M	501	IS000053	3911	23.96						23.96	-
I	501	IS000080	3911	(10,116.54)							(10,116.54)
M	501	IS000080	3911	5,949.88						5,949.88	-
M	201	IS000106	3911	225.81						225.81	-
P	201	IS000106	3911	1,256.68							1,256.68
M	201	IS000107	3911	438.33						438.33	-
P	201	IS000107	3911	2,443.32							2,443.32
M	201	IS000109	3911	9,095.21						9,095.21	-
P	201	IS000109	3911	43,751.26							43,751.26
M	501	IS000109	3911	44.86						44.86	-
P	501	IS000109	3911	430.56							430.56
M	201	IS000111	3911	7,674.01						7,674.01	-
P	201	IS000111	3911	64,246.51							64,246.51
M	201	IS000112	3911	2,204.00						2,204.00	-
P	201	IS000112	3911	15,468.01							15,468.01
M	201	LA000240	3911	229.58						229.58	-
P	201	LA000240	3911	1,410.22							1,410.22
M	201	LA000322	3911	189.42						189.42	-
P	201	LA000322	3911	617.00							617.00
M	201	LA000323	3911	189.42						189.42	-
P	201	LA000323	3911	617.00							617.00
M	201	PR010493	3911	6,232.91						6,232.91	-
P	201	PR010493	3911	28,968.60							28,968.60
Q	201	PR010493	3911	(350.49)							(350.49)
M	201	PR012092	3911	5,887.07						5,887.07	-
P	201	PR012092	3911	51,447.83							51,447.83
Q	201	PR012092	3911	(2,672.72)							(2,672.72)
I	501	PR012092	3911	2,787.99							2,787.99

Hawaii Electric Light Company, Inc.
State ITC (eligible cost types 2xx, 5xx; closed to plant)
For Year 2005

Jnl Cd	EE	WO	Acct	Amount	ROW	S&I	land	auto limit (a)	interco billing	direct overheads	SITC basis
M	201	TD019321	3911	7,451.41						7,451.41	-
P	201	TD019321	3911	34,446.40							34,446.40
Q	201	TD019321	3911	(290.57)							(290.57)
I	201	TD021880	3911	2,589.58							2,589.58
M	201	TD021880	3911	21,440.46						21,440.46	-
P	201	TD021880	3911	53,681.65							53,681.65
I	501	TD021880	3911	1,682.32							1,682.32
M	201	AD000379	3912	162.27						162.27	-
P	201	AD000379	3912	937.41							937.41
M	201	CS000746	3912	72.70						72.70	-
P	201	CS000746	3912	697.70							697.70
M	201	CS000885	3912	72.70						72.70	-
P	201	CS000885	3912	697.71							697.71
M	201	CS000913	3912	130.22						130.22	-
P	201	CS000913	3912	1,249.71							1,249.71
I	201	LA000295	3920	(470.23)				(470.23)			-
M	201	LA000295	3920	6,155.30						6,155.30	-
P	201	LA000295	3920	42,745.18				26,445.18			16,300.00
I	201	LA000301	3920	(1,375.16)				(1,375.16)			-
M	201	LA000301	3920	4,634.40						4,634.40	-
P	201	LA000301	3920	32,183.35				15,883.35			16,300.00
M	223	LA000301	3920	78.70						78.70	-
P	223	LA000301	3920	546.51				546.51			-
I	501	LA000301	3920	1,015.63				1,015.63			-
I	201	LA000310	3920	573.43				573.43			-
M	201	LA000310	3920	10,001.80						10,001.80	-
P	201	LA000310	3920	32,579.16				16,279.16			16,300.00
I	501	LA000310	3920	609.37				609.37			-
I	201	LA000311	3920	573.43				573.43			-
M	201	LA000311	3920	4,691.40						4,691.40	-
P	201	LA000311	3920	32,579.16				16,279.16			16,300.00
I	501	LA000311	3920	609.37				609.37			-
I	201	LA000312	3920	573.43				573.43			-
M	201	LA000312	3920	4,691.40						4,691.40	-
P	201	LA000312	3920	32,579.16				16,279.16			16,300.00
I	501	LA000312	3920	609.37				609.37			-
I	201	LA000313	3920	573.43				573.43			-
M	201	LA000313	3920	10,001.80						10,001.80	-
P	201	LA000313	3920	32,579.16				16,279.16			16,300.00
I	501	LA000313	3920	609.37				609.37			-
I	201	LA000314	3920	573.43				573.43			-
M	201	LA000314	3920	10,001.80						10,001.80	-
P	201	LA000314	3920	32,579.16				16,279.16			16,300.00
I	501	LA000314	3920	609.37				609.37			-
I	201	LA000316	3920	(2,072.30)				(2,072.30)			-
M	201	LA000316	3920	7,926.39						7,926.39	-
P	201	LA000316	3920	25,818.87				9,518.87			16,300.00
I	501	LA000316	3920	250.00				250.00			-
I	201	LA000317	3920	(2,072.30)				(2,072.30)			-
M	201	LA000317	3920	8,035.11						8,035.11	-
P	201	LA000317	3920	26,173.01				9,873.01			16,300.00
I	201	LA000318	3920	(2,072.30)				(2,072.30)			-
M	201	LA000318	3920	8,035.11						8,035.11	-
P	201	LA000318	3920	26,173.01				9,873.01			16,300.00
I	501	LA000318	3920	250.00				250.00			-
I	201	LA000319	3920	(967.21)				(967.21)			-
M	201	LA000319	3920	8,218.49						8,218.49	-
P	201	LA000319	3920	26,770.32				10,470.32			16,300.00
I	201	LA000320	3920	(1,173.81)				(1,173.81)			-
M	201	LA000320	3920	8,064.63						8,064.63	-
P	201	LA000320	3920	26,269.15				9,969.15			16,300.00
M	223	LA000320	3920	103.93						103.93	-
P	223	LA000320	3920	338.52				338.52			-
I	201	LA000321	3920	(2,072.30)				(2,072.30)			-
M	201	LA000321	3920	7,926.39						7,926.39	-
P	201	LA000321	3920	25,818.87				9,518.87			16,300.00
I	501	LA000321	3920	250.00				250.00			-
I	201	LA000324	3920	(2,072.30)				(2,072.30)			-
M	201	LA000324	3920	7,926.39						7,926.39	-
P	201	LA000324	3920	25,818.87				9,518.87			16,300.00
I	201	LA000325	3920	(2,072.30)				(2,072.30)			-
M	201	LA000325	3920	8,054.24						8,054.24	-

Hawaii Electric Light Company, Inc.
State ITC (eligible cost types 2xx, 5xx; closed to plant)
For Year 2005

Jnl Cd	EE	WO	Acct	Amount	ROW	S&I	land	auto limit (a)	interco billing	direct, overheads	SITC basis
P	201	LA000325	3920	26,235.30				9,935.30			16,300.00
I	501	LA000325	3920	250.00				250.00			-
I	201	LA000326	3920	556.39				556.39			-
M	201	LA000326	3920	7,945.36						7,945.36	-
P	201	LA000326	3920	25,880.64				9,580.64			16,300.00
Q	201	LA000326	3920	(1,999.89)				(1,999.89)			-
I	501	LA000326	3920	250.00				250.00			-
I	201	LA000327	3920	556.39				556.39			-
M	201	LA000327	3920	8,083.22						8,083.22	-
P	201	LA000327	3920	26,329.72				10,029.72			16,300.00
Q	201	LA000327	3920	(1,999.89)				(1,999.89)			-
I	201	LA000328	3920	(1,291.87)				(1,291.87)			-
M	201	LA000328	3920	8,155.77						8,155.77	-
P	201	LA000328	3920	26,566.01				11,766.01			14,800.00
I	201	LA000329	3920	(4,444.19)				(4,444.19)			-
M	201	LA000329	3920	7,193.97						7,193.97	-
P	201	LA000329	3920	23,433.13				7,133.13			16,300.00
M	223	LA000329	3920	178.90						178.90	-
P	223	LA000329	3920	997.26				997.26			-
I	501	LA000329	3920	250.00				250.00			-
I	201	LA000330	3920	515.62				515.62			-
M	201	LA000330	3920	6,767.96						6,767.96	-
P	201	LA000330	3920	22,045.46				5,745.46			16,300.00
Q	201	LA000330	3920	(999.94)				(999.94)			-
I	501	LA000330	3920	437.50				437.50			-
I	201	LA000331	3920	515.62				515.62			-
M	201	LA000331	3920	3,986.94						3,986.94	-
P	201	LA000331	3920	22,223.73				5,923.73			16,300.00
Q	201	LA000331	3920	(999.94)				(999.94)			-
M	501	LA000331	3920	250.00						250.00	-
I	201	LA000333	3920	104.16							104.16
M	201	LA000333	3920	3,196.11						3,196.11	-
P	201	LA000333	3920	10,410.79							10,410.79
Q	201	LA000333	3920	(1,041.60)							(1,041.60)
I	201	LA000335	3920	556.40				556.40			-
M	201	LA000335	3920	6,351.34						6,351.34	-
P	201	LA000335	3920	20,688.41				4,388.41			16,300.00
I	501	LA000341	3920	(0.00)							(0.00)
M	501	LA000341	3920	-						-	-
I	201	LA000378	3920	(549.93)				(549.93)			-
M	201	LA000378	3920	12,317.03						12,317.03	-
P	201	LA000378	3920	40,120.61				23,820.61			16,300.00
I	201	LA000380	3920	738.71				738.71			-
M	201	LA000380	3920	4,284.88						4,284.88	-
P	201	LA000380	3920	23,884.48				7,584.48			16,300.00
I	501	LA000380	3920	250.00				250.00			-
M	201	LA000381	3920	(4,399.92)						(4,399.92)	-
P	201	LA000381	3920	359,807.76							359,807.76
Q	201	LA000381	3920	-							-
M	201	LA000382	3920	55,746.02						55,746.02	-
P	201	LA000382	3920	139,574.40							139,574.40
M	201	LA000383	3920	49,921.80						49,921.80	-
P	201	LA000383	3920	124,992.00							124,992.00
I	201	LA000385	3920	586.04				586.04			-
M	201	LA000385	3920	6,480.97						6,480.97	-
P	201	LA000385	3920	36,125.81				19,825.81			16,300.00
M	501	LA000385	3920	250.00						250.00	-
I	201	LA000389	3920	670.10				670.10			-
M	201	LA000389	3920	5,761.73						5,761.73	-
P	201	LA000389	3920	32,116.69				15,816.69			16,300.00
I	501	LA000389	3920	250.00				250.00			-
I	201	LA000394	3920	876.13				876.13			-
M	201	LA000394	3920	6,780.14						6,780.14	-
P	201	LA000394	3920	37,793.41				21,493.41			16,300.00
I	501	LA000394	3920	380.21				380.21			-
I	201	LA000395	3920	696.96				696.96			-
M	201	LA000395	3920	4,225.31						4,225.31	-
P	201	LA000395	3920	40,550.03				24,250.03			16,300.00
I	501	LA000395	3920	1,510.41				1,510.41			-
I	201	LA000396	3920	696.96				696.96			-
M	201	LA000396	3920	4,225.31						4,225.31	-
P	201	LA000396	3920	40,550.03				24,250.03			16,300.00

Hawaii Electric Light Company, Inc.
State ITC (eligible cost types 2xx, 5xx; closed to plant)
For Year 2005

Jnl Cd	EE	WO	Acct	Amount	ROW	S&I	land	auto limit (a)	interco billing	direct overheads	SITC basis
I	501	LA000396	3920	1,510.40				1,510.40			-
M	201	LA000418	3920	31,872.16						31,872.16	-
P	201	LA000418	3920	79,800.10							79,800.10
I	201	LA000420	3920	(1,658.32)				(1,658.32)			-
M	201	LA000420	3920	10,726.11						10,726.11	-
P	201	LA000420	3920	26,855.57				10,555.57			16,300.00
I	201	LA000422	3920	(3,141.80)				(3,141.80)			-
M	201	LA000422	3920	11,687.94						11,687.94	-
P	201	LA000422	3920	29,263.75				12,963.75			16,300.00
I	201	LA000423	3920	(1,658.32)				(1,658.32)			-
M	201	LA000423	3920	10,907.50						10,907.50	-
P	201	LA000423	3920	27,309.71				11,009.71			16,300.00
I	201	LA000468	3920	647.87				647.87			-
M	201	LA000468	3920	12,497.37						12,497.37	-
P	201	LA000468	3920	31,290.36				14,990.36			16,300.00
I	201	LA000469	3920	407.31				407.31			-
M	201	LA000469	3920	8,384.01						8,384.01	-
P	201	LA000469	3920	20,991.50				4,691.50			16,300.00
I	201	LA000470	3920	606.46				606.46			-
M	201	LA000470	3920	8,224.60						8,224.60	-
P	201	LA000470	3920	20,592.38				4,292.38			16,300.00
I	201	LA000471	3920	615.47				615.47			-
M	201	LA000471	3920	9,455.08						9,455.08	-
P	201	LA000471	3920	23,673.20				7,373.20			16,300.00
M	201	LA000472	3920	10,797.16						10,797.16	-
P	201	LA000472	3920	27,033.46				10,733.46			16,300.00
M	201	LA000473	3920	10,907.50						10,907.50	-
P	201	LA000473	3920	27,309.71				11,009.71			16,300.00
M	201	LA000474	3920	10,801.35						10,801.35	-
P	201	LA000474	3920	27,043.93				10,743.93			16,300.00
M	201	LA000475	3920	7,152.13						7,152.13	-
P	201	LA000475	3920	17,907.19				3,107.19			14,800.00
I	501	LA000100	3921	63.71				63.71			-
M	201	H0000989	3942	5,376.38						5,376.38	-
P	201	H0000989	3942	37,336.00							37,336.00
M	201	H0001108	3942	852.88						852.88	-
P	201	H0001108	3942	5,922.80							5,922.80
M	201	H0001109	3942	8,650.52						8,650.52	-
P	201	H0001109	3942	30,082.00							30,082.00
Q	201	H0001109	3942	(0.00)							(0.00)
	201	H5086000	3942	51,013.58							51,013.58
M	201	H5086000	3942	(26,359.87)						(26,359.87)	-
P	201	H5086000	3942	21,379.93							21,379.93
M	201	SS001556	3942	2,178.72						2,178.72	-
P	201	SS001556	3942	8,632.00							8,632.00
M	201	SS001557	3942	336.39						336.39	-
P	201	SS001557	3942	1,340.66							1,340.66
M	201	SS001559	3942	1,475.74						1,475.74	-
P	201	SS001559	3942	5,846.88							5,846.88
M	201	SS001560	3942	1,968.72						1,968.72	-
P	201	SS001560	3942	7,800.00							7,800.00
I	205	SS001589	3942	3,600.00							3,600.00
M	201	SS001841	3942	1,957.19						1,957.19	-
P	201	SS001841	3942	6,375.20							6,375.20
M	201	SS001849	3942	582.69						582.69	-
P	201	SS001849	3942	1,898.00							1,898.00
M	201	SS001856	3942	2,257.96						2,257.96	-
P	201	SS001856	3942	12,656.80							12,656.80
Q	201	SS001856	3942	(130.00)							(130.00)
M	201	TD008611	3942	132.39						132.39	-
P	201	TD008611	3942	807.24							807.24
M	201	TD008935	3942	147.76						147.76	-
P	201	TD008935	3942	900.98							900.98
M	201	TD010488	3942	398.56						398.56	-
P	201	TD010488	3942	1,976.00							1,976.00
M	201	TD011490	3942	1,520.82						1,520.82	-
P	201	TD011490	3942	7,540.00							7,540.00
M	201	TD011758	3942	369.59						369.59	-
P	201	TD011758	3942	1,464.32							1,464.32
M	201	TD013482	3942	2,047.98						2,047.98	-
P	201	TD013482	3942	8,114.06							8,114.06
I	205	TD018637	3942	336.49							336.49

Hawaii Electric Light Company, Inc.
State ITC (eligible cost types 2xx, 5xx; closed to plant)
For Year 2005

Jnl Cd	EE	WO	Acct	Amount	ROW	S&I	land	auto limit (a)	interco billing	direct overheads	BITC basis
I	501	TD019652	3942	769.00							769.00
M	201	TD020557	3942	318.44						318.44	-
P	201	TD020557	3942	3,056.05							3,056.05
M	201	TD020558	3942	215.22						215.22	-
P	201	TD020558	3942	2,065.44							2,065.44
M	201	TD020559	3942	233.35						233.35	-
P	201	TD020559	3942	2,239.44							2,239.44
M	201	TD020560	3942	809.18						809.18	-
P	201	TD020560	3942	7,765.68							7,765.68
M	201	TD020561	3942	969.90						969.90	-
P	201	TD020561	3942	9,308.00							9,308.00
M	201	TD020562	3942	450.92						450.92	-
P	201	TD020562	3942	4,327.44							4,327.44
M	201	TD020563	3942	253.45						253.45	-
P	201	TD020563	3942	2,432.30							2,432.30
M	201	TD020564	3942	351.79						351.79	-
P	201	TD020564	3942	3,376.10							3,376.10
M	201	TD020565	3942	500.47						500.47	-
P	201	TD020565	3942	4,802.93							4,802.93
M	201	TD020566	3942	535.25						535.25	-
P	201	TD020566	3942	5,136.77							5,136.77
M	201	TD020567	3942	507.92						507.92	-
P	201	TD020567	3942	4,874.45							4,874.45
M	201	TD020569	3942	291.56						291.56	-
P	201	TD020569	3942	2,798.08							2,798.08
M	201	TD020601	3942	426.54						426.54	-
P	201	TD020601	3942	4,093.49							4,093.49
M	201	TD020989	3942	77.48						77.48	-
P	201	TD020989	3942	743.60							743.60
I	201	TD021057	3942	137.50							137.50
M	201	TD021057	3942	119.20						119.20	-
P	201	TD021057	3942	1,144.00							1,144.00
I	205	TD021609	3942	72.90							72.90
M	205	TD021609	3942	608.63						608.63	-
P	205	TD021609	3942	3,516.00							3,516.00
M	201	00005725 PW	3970	65.02						65.02	-
P	201	00005725 PW	3970	624.00							624.00
M	201	00007970 PW	3970	783.57						783.57	-
P	201	00007970 PW	3970	1,961.86							1,961.86
M	201	CS000745	3970	796.50						796.50	-
P	201	CS000745	3970	7,644.00							7,644.00
M	201	EE000856 PW	3970	4,033.70						4,033.70	-
P	201	EE000856 PW	3970	12,202.85							12,202.85
M	201	EE077381	3970	75.60						75.60	-
P	201	EE077381	3970	436.75							436.75
I	201	H0000848	3970	247.97							247.97
M	201	H0000848	3970	3,934.69						3,934.69	-
P	201	H0000848	3970	17,314.20							17,314.20
Q	201	H0000848	3970	(3.51)							(3.51)
I	205	H0000848	3970	93.01							93.01
I	501	H0000848	3970	1,094.32							1,094.32
M	501	H0000848	3970	33.88						33.88	-
I	505	H0000848	3970	907.67							907.67
I	506	H0000848	3970	7,782.06							7,782.06
I	521	H0000848	3970	294.00							294.00
M	201	H0000849	3970	1,667.49						1,667.49	-
P	201	H0000849	3970	8,243.40							8,243.40
Q	201	H0000849	3970	(3.32)							(3.32)
I	205	H0000849	3970	136.36							136.36
I	501	H0000849	3970	2,354.00							2,354.00
I	505	H0000849	3970	907.65							907.65
I	506	H0000849	3970	7,758.89							7,758.89
I	521	H0000849	3970	504.00							504.00
I	201	H0000964	3970	1,031.99							1,031.99
M	201	H0000964	3970	1,857.75						1,857.75	-
P	201	H0000964	3970	10,413.41							10,413.41
I	205	H0000964	3970	3.06							3.06
I	201	H0001140	3970	6,609.07							6,609.07
M	201	H0001140	3970	32,646.39						32,646.39	-
P	201	H0001140	3970	190,263.47							190,263.47
Q	201	H0001140	3970	(86.90)							(86.90)
I	205	H0001140	3970	1,944.73							1,944.73

Hawaii Electric Light Company, Inc.
State ITC (eligible cost types 2xx, 5xx; closed to plant)
For Year 2005

Jnl Cd	EE	WO	Acct	Amount	ROW	S&I	land	auto limit (a)	interco billing	direct overheads	SITC basis
I	501	H0001140	3970	188,514.04							188,514.04
M	501	H0001140	3970	(106,196.57)						(106,196.57)	-
I	201	H0001198	3970	17,401.81							17,401.81
M	201	H0001198	3970	9,285.93						9,285.93	-
P	201	H0001198	3970	89,050.39							89,050.39
I	205	H0001198	3970	16.64							16.64
I	501	H0001198	3970	2,579.20							2,579.20
M	501	H0001198	3970	115.39						115.39	-
P	501	H0001198	3970	666.62							666.62
M	201	H0001199	3970	2,457.38						2,457.38	-
P	201	H0001199	3970	23,583.26							23,583.26
I	205	H0001199	3970	615.40							615.40
I	501	H0001199	3970	1,845.08							1,845.08
I	505	H0001199	3970	5,697.96							5,697.96
I	521	H0001199	3970	504.00							504.00
I	201	H3126000	3970	2,535.61							2,535.61
M	201	H3126000	3970	10,710.86						10,710.86	-
P	201	H3126000	3970	85,540.39							85,540.39
Q	201	H3126000	3970	-							-
I	501	H3126000	3970	2,443,100.37							2,443,100.37
M	501	H3126000	3970	(0.00)						(0.00)	-
I	502	H3126000	3970	154,312.92							154,312.92
M	502	H3126000	3970	(42,007.29)						(42,007.29)	-
I	505	H3126000	3970	675,161.97							675,161.97
I	506	H3126000	3970	9,051.00							9,051.00
I	522	H3126000	3970	247.35							247.35
I	550	H3126000	3970	1,598.06					1,598.06		-
M	550	H3126000	3970	274,723.28						274,723.28	-
M	201	H4838000	3970	4,801.18						4,801.18	-
P	201	H4838000	3970	23,094.06							23,094.06
Q	201	H4838000	3970	175.06							175.06
S	201	H4838000	3970	41.22							41.22
I	205	H4838000	3970	691.73							691.73
I	501	H4838000	3970	1,563.55							1,563.55
I	505	H4838000	3970	4,620.86							4,620.86
I	506	H4838000	3970	7,756.52							7,756.52
I	201	PR011446	3970	(0.00)							(0.00)
M	201	PR011446	3970	-						-	-
P	201	PR011446	3970	(0.00)							(0.00)
Q	201	PR011446	3970	-							-
I	501	PR011446	3970	(0.00)							(0.00)
M	201	SS000020 PW	3970	483.23						483.23	-
P	201	SS000020 PW	3970	2,693.60							2,693.60
I	205	SS000020 PW	3970	333.56							333.56
M	201	SS000022 PW	3970	729.37						729.37	-
P	201	SS000022 PW	3970	2,935.56							2,935.56
I	205	SS000022 PW	3970	98.95							98.95
I	501	SS000022 PW	3970	41.23							41.23
I	521	SS000022 PW	3970	56.00							56.00
M	201	SS000023 PW	3970	729.37						729.37	-
P	201	SS000023 PW	3970	2,935.55							2,935.55
I	501	SS000025 PW	3970	790.00							790.00
I	501	SS000026 PW	3970	657.00							657.00
M	201	SS000034 PW	3970	2,176.99						2,176.99	-
P	201	SS000034 PW	3970	5,450.64							5,450.64
I	205	SS000034 PW	3970	56.93							56.93
M	201	SS000035 PW	3970	2,176.99						2,176.99	-
P	201	SS000035 PW	3970	5,450.64							5,450.64
I	501	SS000037 PW	3970	562.50							562.50
M	201	SS001755	3970	448.72						448.72	-
P	201	SS001755	3970	3,116.12							3,116.12
I	205	SS001755	3970	290.74							290.74
M	201	SS001794	3970	1,640.28						1,640.28	-
P	201	SS001794	3970	15,741.61							15,741.61
I	205	SS001794	3970	43.85							43.85
I	501	SS001794	3970	1,187.75							1,187.75
M	201	SS001859	3970	6,395.87						6,395.87	-
P	201	SS001859	3970	21,204.90							21,204.90
I	505	SS001874	3970	877.50							877.50
I	505	SS001876	3970	621.00							621.00
M	501	SS001905	3970	7,156.20						7,156.20	-
I	501	SS001906	3970	3,229.15							3,229.15

Hawaii Electric Light Company, Inc.
State ITC (eligible cost types 2xx, 5xx; closed to plant)
For Year 2005

Jnl Cd	EE	WO	Acct	Amount	ROW	S&I	land	auto limit (e)	interco billing	direct overheads	SITC basis
M	201	SS001914	3970	368.87						368.87	-
P	201	SS001914	3970	3,540.00							3,540.00
I	501	SS001914	3970	2,010.00							2,010.00
I	501	SS001958	3970	1,035.00							1,035.00
M	501	SS001958	3970	1,140.21						1,140.21	-
P	501	SS001958	3970	2,654.60							2,654.60
M	201	AD000380	3980	1,065.15						1,065.15	-
P	201	AD000380	3980	2,666.87							2,666.87
I	522	CS000553	3980	7.00							7.00
M	201	CS000723	3980	42.26						42.26	-
P	201	CS000723	3980	405.59							405.59
M	201	CS000884	3980	164.92						164.92	-
P	201	CS000884	3980	1,582.70							1,582.70
M	201	CS000931	3980	236.76						236.76	-
P	201	CS000931	3980	592.80							592.80
I	201	EE080547	3980	869.79							869.79
I	201	H0000256	3980	1,956.23		1,956.23					-
M	201	H0000256	3980	4,361.96						4,361.96	-
P	201	H0000256	3980	25,064.21		25,064.21					-
Q	201	H0000256	3980	(6.41)		(6.41)					-
S	201	H0000256	3980	7,248.90		7,248.90					-
I	205	H0000256	3980	1,325.55		1,325.55					-
I	501	H0000256	3980	43,158.76		43,158.76					-
M	501	H0000256	3980	306.47						306.47	-
P	501	H0000256	3980	1,825.01		1,825.01					-
I	501	H0000948	3980	8,437.50		3,980.00					4,457.50
S	201	H0023999 PW	3980	269.16							269.16
I	505	H0023999 PW	3980	740.00							740.00
				48,433,137.39	555.00	3,823,520.95	-	484,292.93	288,872.74	2,955,566.66	40,880,329.11
								less: embedded overhead in stock issues:			(633,104.19)
										adjusted SITC basis:	40,247,224.92
										SITC rate:	4%
										SITC:	1,609,889

CA-IR-277

Ref: HELCO-1302, Response to CA-IR-10, page 15, Renewable Energy Technologies Income Tax Credit.

a. Please explain HELCO's accounting for this tax credit.
b. Provide the amounts of Renewable Credits earned by HELCO in each year 2002 through 2005 and projected in 2006.
c. Explain the rate case accounting for this tax credit, indicating HELCO schedules and workpapers affected.
d. Explain the basis for excluding this tax credit in calculating test year income tax expense, if applicable.
e. Provide the amount of any additional adjustment that may be required to recognize this tax credit for ratemaking purposes.

HELCO Response:

a. Please refer to the book and ratemaking accounting for the state ITC as described in T-13, pages 9-10. The book and ratemaking accounting for the renewable energy tax credit is identical to that of the state ITC; the only difference is the proposed 25-year amortization of renewable energy tax credit. Please refer to CA-IR-174 and CA-IR-276.

b. The gross renewable credits earned were $6,117 for 2002, $0 for 2003, $133,551 for 2004, $0 for 2005 and $0 projected for 2006.

c. For rate case purposes, this tax credit is combined with the state capital goods excise tax credit. The rate base amount, as shown at HELCO-1601, is included in "Unamortized ITC". The 25-year amortization of the gross renewable energy is included in "Amortization of State ITC" on the results of operations schedule at HELCO-2101. See state capital goods excise tax credit exhibit HELCO-1304.

d. The amortization of the gross renewable energy credit was included in line 5, "Amortization of state ITC" on HELCO-1302.

e. No adjustment is required.

CA-IR-278

Ref: HELCO-WP-1302, page 1; Response to CA-IR-10, page 2, FIT Rate.

The 2004 tax return reflects Total FIT of $2,006,929 at line 31 on taxable income of $5,902,732 at line 30, indicating an effective FIT rate of 34.00%. However, HELCO's "Calculation of Federal Effective Income Tax Rate" in HELCO-WP-1302 starts with a statutory rate of 35%.

a. Please explain this apparent inconsistency and provide supporting documentation for the tax rate used in HELCO's filed 2004 income tax return.
b. Confirm that the Company believes that HELCO revenue requirement should contain Federal Income Taxes calculated on a stand-alone basis, without regard to the effects of filing a consolidated HEI tax return.
c. Explain how/if the graduated statutory corporate federal income tax rates have been considered for ratemaking purposes for HELCO on a stand-alone basis.
d. State the Company's understanding of each FIT graduated tax rate that is applicable to HELCO taxable income and describe the basis of such understanding.

HELCO Response:

a. The Company's 2004 tax return and 2006 proposed stand alone federal tax liability calculations were based on the corporate tax rate schedule. The lower tax rate would apply to the present rate calculation but would be applicable at the proposed rates. Please refer to corporate tax rate schedule attached.

b. Confirmed. As in past HELCO rate cases, revenue requirements have been evaluated and determined on a stand alone basis.

c. The 2006 projected pretax income at proposed rates for ratemaking purposes of $35,201,000 (HELCO-1302, Line 13) would be subject to the statutory stand alone rate of 35% based on the attached corporate tax rate schedule. Graduated tax rates are not applicable for the 2006 test year since the projected pretax income is in excess of $18,333,333.

d. Graduated tax rates are not applicable for the 2006 test year. See explanation at c.

Tables, Charts and Lists

INCOME TAX & ACCOUNTING

Corporate Tax Rate Schedule

Corporate Tax Rate Schedule

Corporate Tax Rate Schedule
For taxable years beginning on or after Jan. 1, 1993

If taxable income (line 31, Form 1120, or line 26, Form 1120-A on page 1) is:

Over--	But not over--	Tax is:	Of the amount over--
$0	$50,000	15%	$0
50,000	75,000	$7,500 + 25%	50,000
75,000	100,000	13,750 + 34%	75,000
100,000	335,000	22,250 + 39%	100,000
335,000	10,000,000	113,900 + 34%	335,000
10,000,000	15,000,000	3,400,000 + 35%	10,000,000
15,000,000	18,333,333	5,150,000 + 38%	15,000,000
18,333,333	-------	35%	0

CA-IR-279

Ref: HELCO Response to CA-IR-10.

For each of the following items contained in HELCO's 2004 stand alone Federal Income Tax return, please describe the item and explain how/if and where the equivalent item is reflected within the Company's test year income tax expense and/or deferred tax reserve calculations in T-13 workpapers:

a. Page 6, "Section 481(a) adjustments" $2,404,813;
b. Page 8 "Abandoned/Retired Assets" $321,509;
c. Page 8 "Cost of Removal Expense" $1,496,396; and
d. Page 8 "Percentage Repairs Allowance" $531,066.

HELCO Response:

a. The tax on this item is included in HELCO's deferred tax reserve on HELCO-WP-1305a and HELCO-WP-1305b. Please refer to the description of this temporary difference in the Company's response to CA-IR-173, page 5.

b. The tax on this item is included in HELCO's deferred tax reserve on HELCO-WP-1305a and HELCO-WP-1305b, accounts 28353 and 28354. For book purposes, gain or loss is not recognized on the retirement of fixed assets. For tax purposes, gain or loss on retirements is recognized for assets placed in service after 1980. The Commission approved normalization of this item in D&O 7553, Docket No. 4393.

c. The tax on this item is included in HELCO's deferred tax reserve on HELCO-WP-1305a and HELCO-WP-1305b, accounts 28343 and 28344. For book and ratemaking purposes, the Company capitalizes and depreciates cost of removal expenditures over the life of the related asset. For tax purposes, these expenditures are deducted in the year incurred. Deferred taxes are generated for this temporary difference. The Commission approved normalization of this item in D&O 7553, Docket No. 4393.

d. The tax on this item is included in HELCO's deferred tax reserve on HELCO-WP-1305a

and HELCO-WP-1305b. Please refer to the description of this temporary difference in the Company's response to CA-IR-173, page 5. Please note that percentage repairs allowance deduction as detailed on CA-IR-10, page 8, is incorrect due to a clerical error. We have revised CA-IR-10 (revised 8/30/06) and page 8 now reflects the correct amount of $1,089,415 as deducted on the 2004 federal and state tax return.

CA-IR-280

Ref: HELCO-WP-1305a/b and Response to CA-IR-173, Deferred Tax Reserve Items Included in Rate Base.

Please explain the rationale behind HELCO's inclusion of each of the following deferred tax reserve line items, indicating where the related balance sheet asset/liability amounts are reflected in HELCO's asserted rate base:

a. 28309 Prepaid Expenses;
b. 28311 Public Injuries;
c. 28313 Gain on Sale of Mililani;
d. 28317 Amort of RB Int Differential;
e. 28319 Bad Debt;
f. 28321 Cap Cost of Trailer;
g. 28323 HCPC Purchase Power;
h. 28329 Book Gains/Losses;
i. 28329 Capitalized Hawaii Solar;
j. 28329 Energy Services Costs Incurred;
k. 28329 Sun Power for Schools;
l. 28329 BPI costs;
m. 28329 HMSA Reserve;
n. 28329 DSM;
o. 28329 Rev Bd Redemption Prem/Amort;
p. 28329 Emission Fees;
q. 28331 Capitalized Legal Costs;
r. 28365 Puna Sugar Settlement;
s. 28367 software;
t. 28367 Prepaid Ellipse Relicense Fee; and
u. 28397 IRP.

HELCO Response:

a. The deferred tax liability related to this item is the result of a temporary difference between the book and tax treatment of prepaid expenses. For book purposes, prepaid expense is amortized over the applicable life of the related asset. For tax purposes, the Company deducts prepaid expenses when paid. Although ratemaking treatment of this item has not specifically been addressed by the Commission with regard to HELCO, the deferred tax reserve related to prepaid expenses was allowed by the Commission in D&O No. 18365

(February 8, 2001) in Docket No. 99-0207.

b. This balance relates to an IRS adjustment that should have fully reversed by the test year. The balance will be excluded from rate base at the Company's next opportunity.

c. This balance should have fully reversed by the test year. The balance will be excluded from rate base at the Company's next opportunity.

d. The deferred tax asset related to this item is the result of a temporary difference between the book and tax treatment of interest earned on undrawn revenue bond funds. For book purposes, interest income is calculated and accrued based on the balance of undrawn funds multiplied by the fixed bond interest rate. Differences between the book accrual and what is actually earned are capitalized and amortized as interest expense over the life of the related asset. For tax purposes, only interest income actually earned is taxed. The tax effect of interest expense is included in rate base as a component of working cash and correspondingly, the deferred tax asset should also be included in rate base.

e. The deferred tax asset related to this item is the result of a temporary difference between the accrual basis accounting for book purposes and actual write-off method for tax purposes. Although ratemaking treatment of this item has not specifically been addressed by the Commission with regard to HELCO, the deferred tax reserve related to the bad debt reserve was allowed by the Commission in D&O No. 18365 (February 8, 2001) in Docket No. 99-0207.

f. The deferred tax asset related to this item is the result of a temporary difference between the book and tax treatment of a photovoltaic trailer (Energy Services) that was expensed for book purposes but capitalized for tax purposes in 1994. The reversing entries were included in depreciation (282.01 "Depreciation") and this balance should be reclassified to that

activity. There is no net remaining balance relating to this item as the deferred tax asset has fully reversed.

g. This balance should have fully reversed by the test year. The balance will be excluded from rate base at the Company's next opportunity.

h. $11,601 of the total deferred tax liability ($9,808 federal and $1,793 state) relates to an error that should be excluded from rate base and will be adjusted at the Company's next opportunity. The remaining balance primarily relates to a 1998 post year end adjustment relating to ACRS losses that should be reclassified to activity 28353 "G/L ACRS Retirements."

i. This balance should have fully reversed by the test year and should be excluded from rate base. The adjustment will be excluded from rate base at the Company's next opportunity.

j. This amount represents deferred taxes related to demand side management (DSM) costs. Please refer to item (n) below.

k. The deferred tax asset related to this item is the result of a temporary difference between the book and tax treatment of contributions received for the "Sun Power for Schools" project. The "Sun Power for Schools" is a project under the renewable energy program in which the Company collects voluntary monetary contributions from customers to offset costs of installing photovoltaic systems at school facilities. For book purposes, no income is recognized as the contributions are received; rather, contributions are recorded as a liability on the books. For tax purposes, the contributions are recognized as income when received. Although ratemaking treatment of this item has not specifically been addressed by the Commission with regard to HELCO, the deferred tax reserve related to this project was allowed by the Commission in D&O No. 18365 (February 8, 2001) in Docket No. 99-0207.

l. The deferred tax liability related to this item is a result of a temporary difference between the book and tax treatment of business process improvement costs (BPI). In 1997, for book purposes, the Company applied its capital clearing percentages to total BPI costs and thereby expensed a portion of these costs. For tax purposes, it was determined that $266,317 of the book costs capitalized was deductible for tax purposes. The reversing entries are included in depreciation (282.01 Depreciation) and should be reclassified to that activity. There is no change in total deferred tax reserve as a result of this reclassification.

m. This balance should have fully reversed by the test year. The balance will be excluded from rate base at the Company's next opportunity.

n. The deferred tax asset related to this item is the result of a temporary difference between the book and tax treatment of integrated resource planning (IRP) and demand side management (DSM) costs. For book purposes, these costs are capitalized and expensed when the related revenues are collected. For tax purposes, these costs are deducted currently. Although ratemaking treatment of this item has not specifically been addressed by the Commission with regard to HELCO, the deferred tax reserve related to DSM and IRP costs was allowed by the Commission in D&O No. 18365 (February 8, 2001) in Docket No. 99-0207.

o. The deferred tax liability related to this item is the result of a temporary difference between the book and tax treatment of costs associated with the early redemption of revenue bonds. For book purposes, the early redemption premium and unamortized debt issuance costs are amortized over the remaining life of the original revenue bond as interest expense. For tax purposes, these costs are deducted in the year of redemption. The tax effect of interest expense is included in rate base as a component of working cash and correspondingly, the deferred tax asset should also be included in rate base.

p. The deferred tax asset related to this item is the result of a temporary difference between the book and tax treatment of emissions fees. For book purposes, emissions fees are accrued. For tax purposes, emissions fees are deducted when paid. Emissions fees are included in rate base within the O&M non-labor expense component of working cash. Correspondingly, the deferred tax asset relating to emissions fee should also be included.

q. The deferred tax asset related to this item is predominantly the result of temporary differences between the book and tax treatment of legal costs incurred relating to purchased power agreements. For book purposes, legal fees relating to purchased power agreements are expensed. For tax purposes, these costs are amortized over the term of the purchased power agreement. Purchased power expenses are included in rate base within working cash. Correspondingly, the deferred tax asset relating to these costs should also be included.

r. This balance should have fully reversed by the test year. The balance will be excluded from rate base at the Company's next opportunity.

s. The deferred tax asset related to this item is the result of temporary differences between the book and tax treatment of software. Generally, for book purposes, software costs are expensed. For tax purposes, software costs are depreciated over three years; note that bonus depreciation was allowed for assets placed in service after May 6, 2003 through December 31, 2004. The PUC addressed the ratemaking treatment of certain systems development and software cost in D&O No. 18365, Docket No. 99-0207. However, the costs at issue related to a specific project called Apprise; the deferred tax asset related to Apprise was not allowed. The 2006 test year balance does not include deferred taxes related to Apprise and should be allowed in rate base.

t. The deferred tax asset related to this item is the result of a temporary difference between the

book and tax treatment of the Ellipse upgrade fee. Please refer to HELCO T-9, page 14 for discussion of this item. For book purposes, the upgrade fee is being amortized through September 2007. For tax purposes, Ellipse upgrade fee is depreciated over three years. See discussion at (s) above relating to software depreciation.

u. Please refer to item (n) above.