BEFORE THE PUBLIC UTILITIES COMMISSION
OF THE STATE OF HAWAII

In the Matter of the Application of	)	
	)	
HAWAII ELECTRIC LIGHT COMPANY, INC.	)	Docket No. 05-0315
	)	
For Approval of Rate Increases and Revised Rate Schedules and Rules.	)	
	)	

RESPONSES TO
CONSUMER ADVOCATE
SUPPLEMENTAL INFORMATION REQUESTS

BOOK 1 OF 1

February 16, 2007

PARTIAL CONFIDENTIAL (IN SEALED ENVELOPE)

FILED

2007 FEB 16 P 4: 08

PUBLIC UTILITIES
COMMISSION

CA-SIR-1

Ref: HELCO WP-404, page 54-93.

HELCO-WP-404 pages 54-93 include "Revised from HELCO Annual Calibration Factor Report for Year 2005 filed March 15, 2006" in their titles.

a. Please explain what revisions were made to the "Calibration Factor Annual Report for Year 2005" dated March 15, 2006, to result in the analysis of HELCO-WP-404 pages 54-93.

b. Please provide equations and calculations that support your explanation.

HELCO Response:

a. As explained in HELCO T-4, page 40, line 17, to page 42, line 15, the different calibration factors were derived because different modeling techniques were used. The calibration factor that was submitted to the PUC on March 15, 2006 was derived through the use of the probabilistic modeling technique, which was the technique used in the 2000 test year rate case. The calibration factors that were submitted on HELCO-WP-404, pages 54-93 were derived using the Monte Carlo modeling technique, which is the technique used in the 2006 test year rate case. The output from the model is specific to the technique used for a given production simulation; the probabilistic technique provided one set of results and the Monte Carlo technique provided a second set of results. All the outputs for the firm dispatchable generating units on the HELCO system were revised as an outcome to rerunning the model using the Monte Carlo technique resulting in all the workpapers submitted as HELCO-WP-404, pages 54-93. Also, as explained on HELCO T-4, page 40, lines 4-14, and page 43, lines 14-19, for the instant docket, two calibration factors are being used, one for each fuel type, as shown on HELCO-WP-404, page 54, where in the March 15, 2006 filing, only a system-wide calibration factor was calculated.

b. There are no equations or calculations to show what revisions were made since the changes

were based on completely new outputs from the production simulation. HELCO T-4, page 36, lines 14-24, explains that the calibration factor is the difference between heat rates from the production simulation and from actual recorded data. The bottom of HELCO-WP-404, page 54 explains the calculation of the calibration factor. HELCO T-4, page 40, line 17, to page 41, line 13, explains the conceptual difference in the internal modeling algorithm between the two techniques.

At a conceptual level, the Monte Carlo technique uses random numbers to generate multiple production costs. The average of these production costs converges to the true production cost with $\frac{1}{\sqrt{N}}$ convergence (where N = the number of trials) as predicted by the central limit theorem which states

Central Limit Theorem[1]

Let $X_1, \ldots, X_n, \ldots$ be independent random variables that have the same distribution function and therefore the same mean μ and the same variance σ^2. Let $Y_n = X_1 + \ldots + X_n$. Then the random variable

$$Z_n = \frac{Y_n - n\mu}{\sigma\sqrt{n}}$$

is asymptotically normal with mean 0 and variance 1; that is, the distribution function $F_n(x)$ of Z_n satisfies

$$\lim_{n\to\infty} F_n(x) = \Phi(x) = \frac{1}{\sqrt{2\pi}} \int_{-\infty}^{x} e^{-u^2/2}\, du$$

By contrast, the probabilistic technique does not utilize random numbers in its production cost calculations but rather uses probability distributions. It employs a method

called "convolution" in which it combines two different probability distribution functions to obtain a production cost. Mathematically, convolution is usually defined as

$$(f * g)(t) = \int f(t-\tau)g(\tau)d\tau$$

In this case however, our probability distribution functions are discrete, so we use the discrete definition of convolution which is given by

$$(f * g)(m) = \sum_n f(n)g(m-n)$$

[1] Kreyszig, Erwin "Advanced Engineering Mathematics", Seventh Edition. John Wiley & Sons, Inc, 1993.

CA-SIR-2

Ref: HELCO-WP-403 page 3, CA-IR-39.

HELCO-WP-403 page 3, "Test Year 2006 Estimated Demand & Energy Losses" is referred to by CA-IR-39. The last sentence of the second bullet point on page 1 of the response to CA-IR-39 states that, "The sum of the energy losses at each load level is the total estimated annual energy losses." Pages 2 through 6 of the response to CA-IR-39 are a spreadsheet titled HELCO_loss calc data_2006.xls.

a. The sum of all of the values in column "d" (labeled Dist/Sec) on pages 2 through 4 of the response to CA-IR-39 is 47032 MWh, or 47.0 GWh. On HELCO-WP-403 page 3, the sum of the distribution and secondary losses (9.4 GWh of Dist Tsf Losses, 7.2 GWh of Dist Losses, 21.7 GWh of Sec Tsf Losses, and 7.0 GWh of Sec Losses) is 45.3 GWh. Please explain why there is a difference between these numbers. Please identify which number is correct. Please provide the calculations that were used to determine the Distribution Transformer Losses, Distribution Losses, Secondary Transformer Losses, and Secondary Losses on HELCO WP-403 page 3.

b. The sum of all of the values in column "h" (labeled Trans) on pages 2 through 4 of the response to CA-IR-39 is 53037 MWh, or 53.0 GWh. On HELCO-WP-403 page 3, line C, the transmission losses are 52.9 GWh. Please explain why there is a difference between these numbers. Please identify which number is correct. Please provide the calculations that were used to determine the Transmission Losses on HELCO-WP-403 page 3.

HELCO Response:

a. The 47.0 GWh total in column "d" (labeled Dist/Sec) on pages 2 through 4 of the response to CA-IR-39 includes distribution and secondary losses as well as Company Use. Adding Company Use of 1.7 GWh, on page 3 of HELCO-WP-403, to distribution and secondary losses of 45.3 GWh on page 3 of HELCO-WP-403 results in the same 47.0 GWh total.

b. The data values in CA-IR-39 correct for an error in the transmission loss calculation in HELCO-WP-403. The calculation error resulted from an inadvertent exclusion of a section of HELCO's transmission system when modeling losses. Correction of the error (as used in CA-IR-39) increases transmission losses by 0.1 GWh to 53.0 GWh or by 0.01%.

CA-SIR-3

Ref: T-4 page 16 lines 8 through 13, T-4 pages 23 through 25.

Beginning on line 21 of T-4 page 23, L. K. K. Giang states,

> Because of the potential for overloads on certain transmission lines in the northwestern area of the island if certain other lines are out of service (either planned or unplanned), Keahole unit CT-4 (or CT-5) must be operated for more hours, at higher output levels, and generate more energy than it otherwise would under economic commitment and economic dispatch in order to mitigate the potential for line overloads.

Please provide all reports and power flow analyses that support the statement that Keahole CT-4 (or CT-5) must be operated for more hours, at higher output levels, and generating more energy than it otherwise would under economic dispatch, to mitigate line overloads or low voltage problems.

HELCO Response:

As mentioned in HELCO T-4, page 23-25, Keahole CT-4 or CT-5 is committed earlier than it normally would under economic commitment in order to mitigate the risk of transmission line overloads.

In general, under existing system conditions and configuration, power flows from East Hawaii to West Hawaii via three 69 kV transmission corridors. The Waimea to Keamuku line (designated as the 7200 line) and Waimea to Ouli line (designated as the 7300 line) make up the western most section of the northern transmission corridor. Currently, in situations in which all transmission lines are in service, the power flow on the 7300 line is approaching the line's normal (continuous) ratings. Under a single contingency event (one transmission line out of service), power flow on the 7200 and 7300 lines may exceed the emergency ratings of these lines.

The Keamuku to Keahole line (designated as the 6800 line) and the parallel path between Anaehoomalu and Keahole carry power from the northern and middle corridors to the West

Hawaii loads. Currently, under a single contingency event (one transmission line out of service) the 6800 line may exceed its emergency current rating and voltages in West Hawaii may fall below minimum criteria.

Emergency conductor ratings provide the maximum amount of current that a line is capable of carrying on a limited duration basis. Exceeding a line's emergency rating will cause the temperature of the conductor to exceed its thermal capability, and may result in permanent conductor damage. As the conductor temperature rises, the potential for a line failure or fault also rises due to increased conductor sag, which increases the likelihood of contact with trees or obstacles, or failure of weak line splices and termination points. A line failure or fault would result in a possible prolonged outage as repairs are made.

In the event of a single transmission contingency, HELCO estimates that the System Operator will require roughly 15 minutes to identify/verify the situation, and to implement corrective actions including ramping up of Keahole generation or shedding load. Based on this 15 minute reaction time, HELCO estimates that if the current flow on the 7200, 7300 and 6800 lines is limited to no more than about 340 Amps, permanent conductor damage can be avoided. If the maximum emergency current flow is greater than 340 Amps, there may be inadequate time for the System Operator to respond which may result in permanent conductor damage and could increase the potential for line failure or fault.

With Keahole generation located in West Hawaii, commitment of Keahole CT-4 or CT-5 earlier than it would under economic commitment as system demand increases will tend to reduce the East Hawaii to West Hawaii power flows over the four East Hawaii to West Hawaii transmission line corridors, including the 7200, 7300 and 6800 transmission lines.

HELCO objects to the request that it provide "all reports and power flow analyses..." on the grounds that the request is overly broad and unduly burdensome. Without waiving the objection, as an example, Chart 1 illustrates the impact of earlier commitment of a Keahole CT on the 7300 line's power flow under a single contingency scenario in which the 7200 line is out of service and assuming that all generating units are available and as-available generation is at average output.

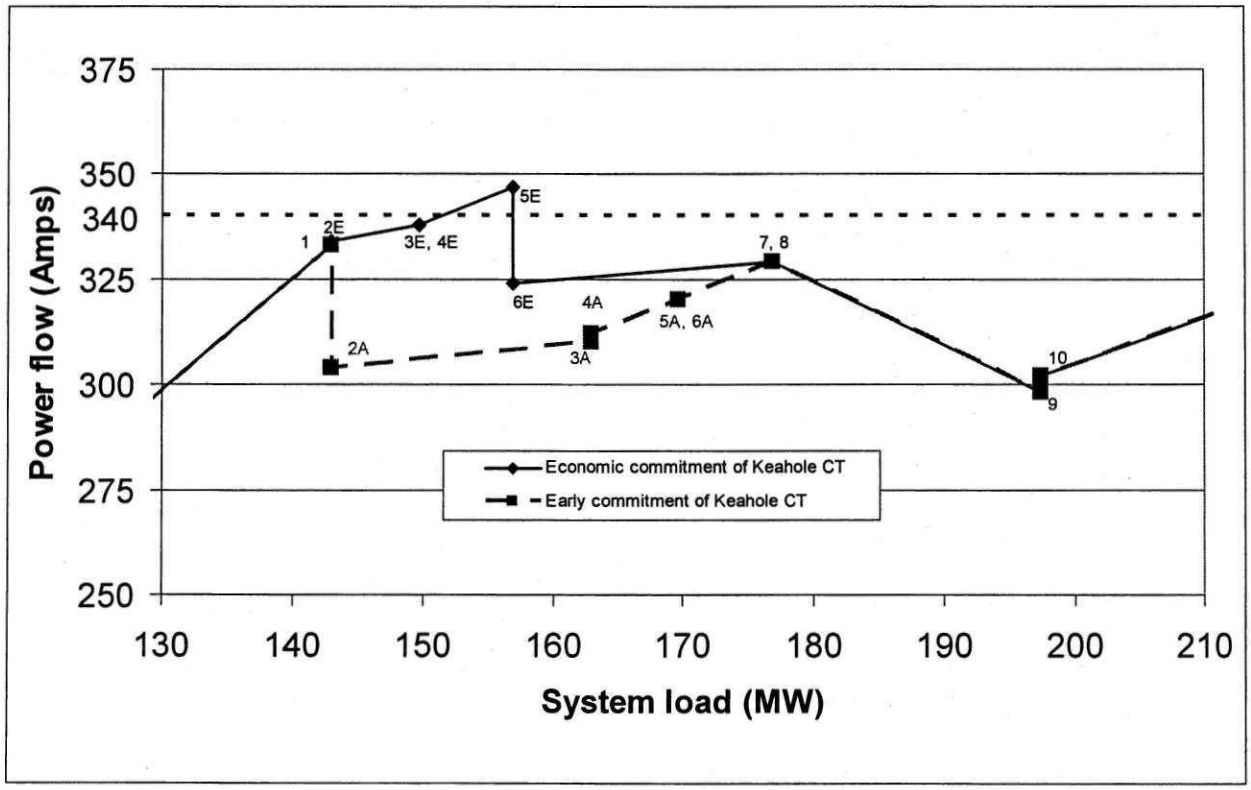

Chart 1: Expected 7300 line flow under single contingency

As Chart 1 shows, without the early commitment of a Keahole CT, the power flow on the 7300 may exceed 340 Amps such that there may be inadequate time (i.e., less than 15 minutes) for the operator to take corrective action upon a single transmission contingency. The load flow simulations utilized to develop this chart were selected at key unit commitment points to

calculate the impact of different unit commitments on current flows on various transmission lines and are included in Figures 1 through 15.

HELCO also provided presentations and studies (which were based on load flow analyses) that addressed the mitigating effects of early commitment of Keahole generation in Docket No. 03-0388. A recent presentation (1/26/06) was included as Attachment 1 to the response to CA-IR-61 in this docket.

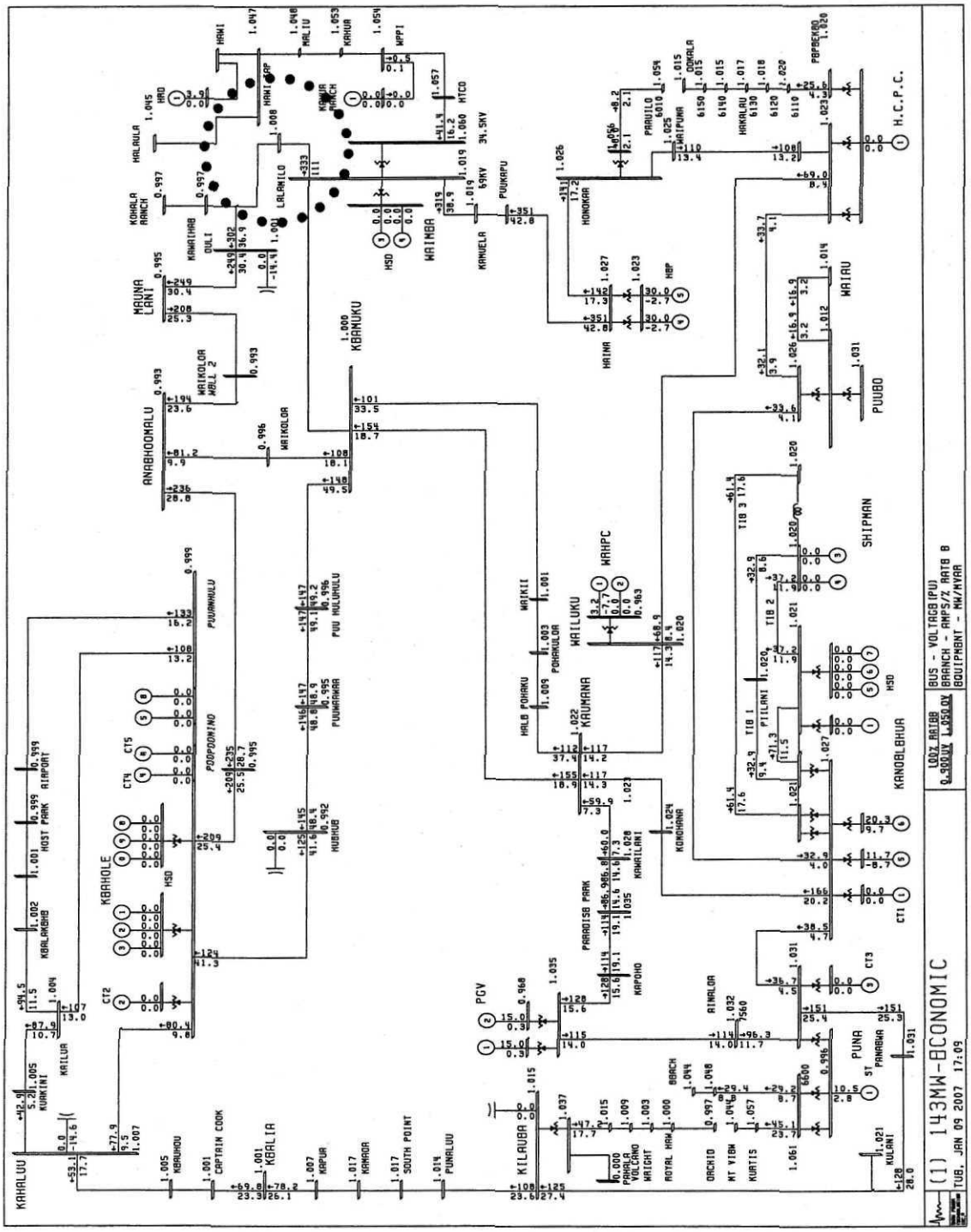

Figure 1: Chart 1, Point 1 – 7200 line outage

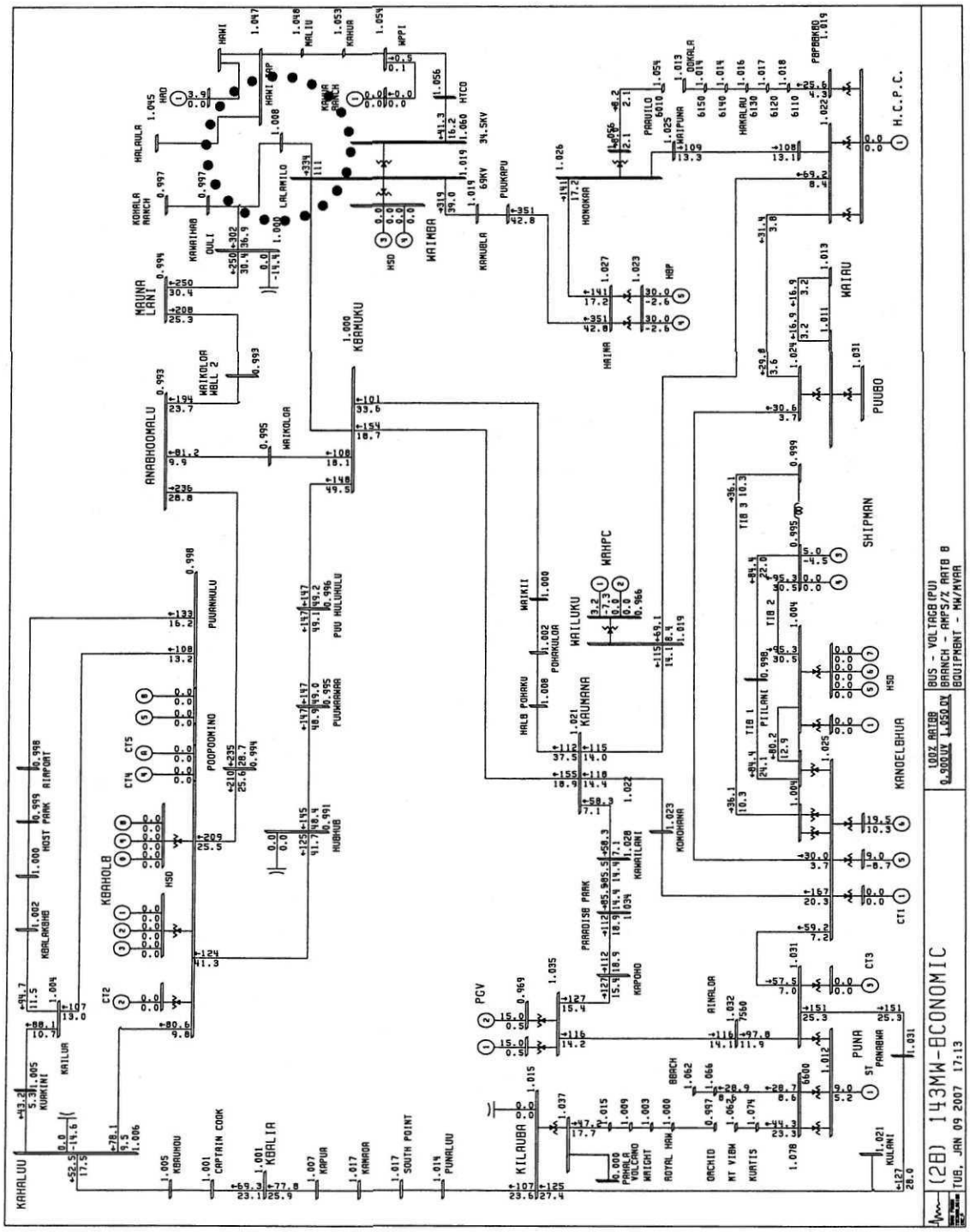

Figure 2: Chart 1, Point 2E – 7200 line outage (economic commitment of Keahole CTs)

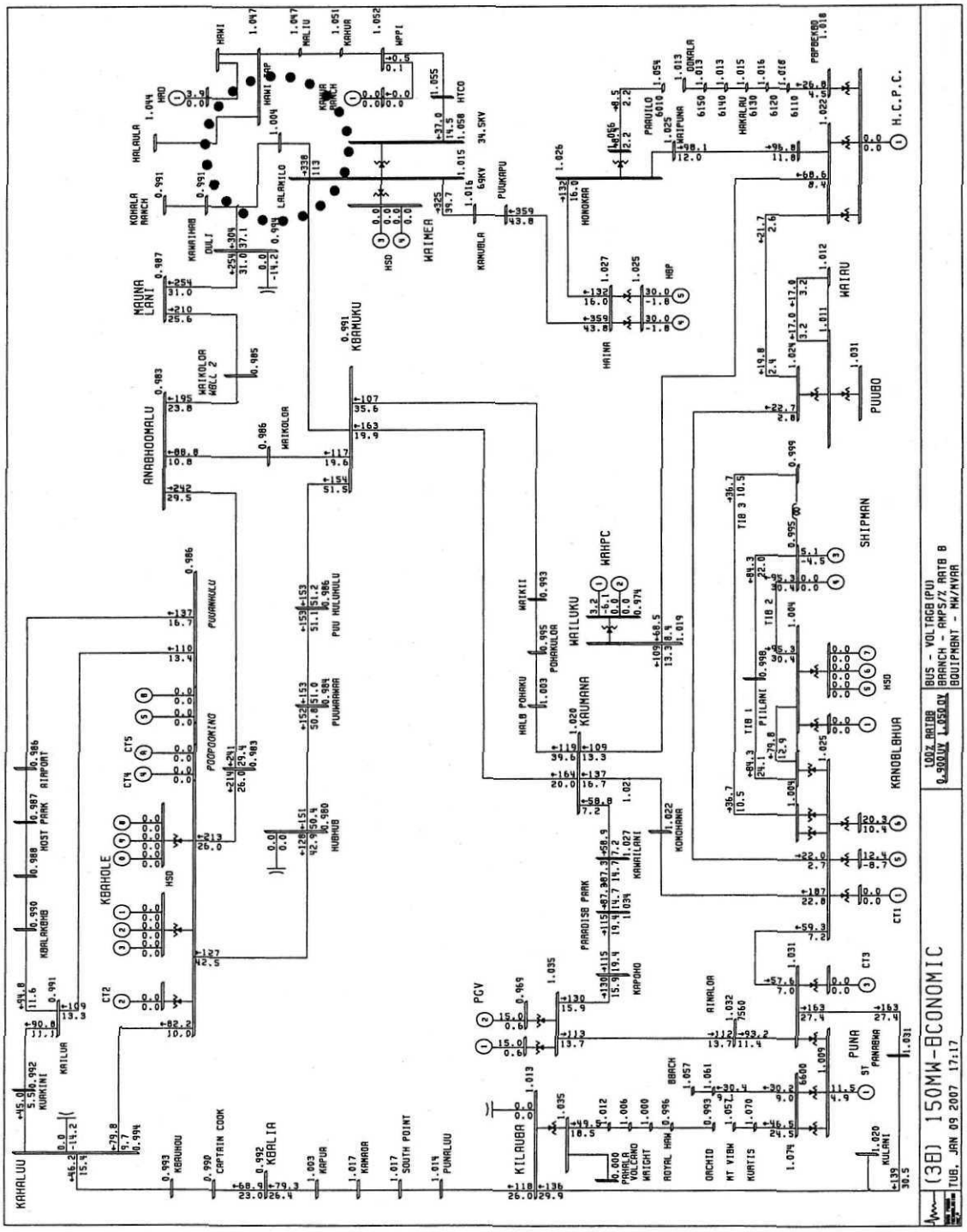

Figure 3: Chart 1, Point 3E – 7200 line outage (economic commitment of Keahole CTs)

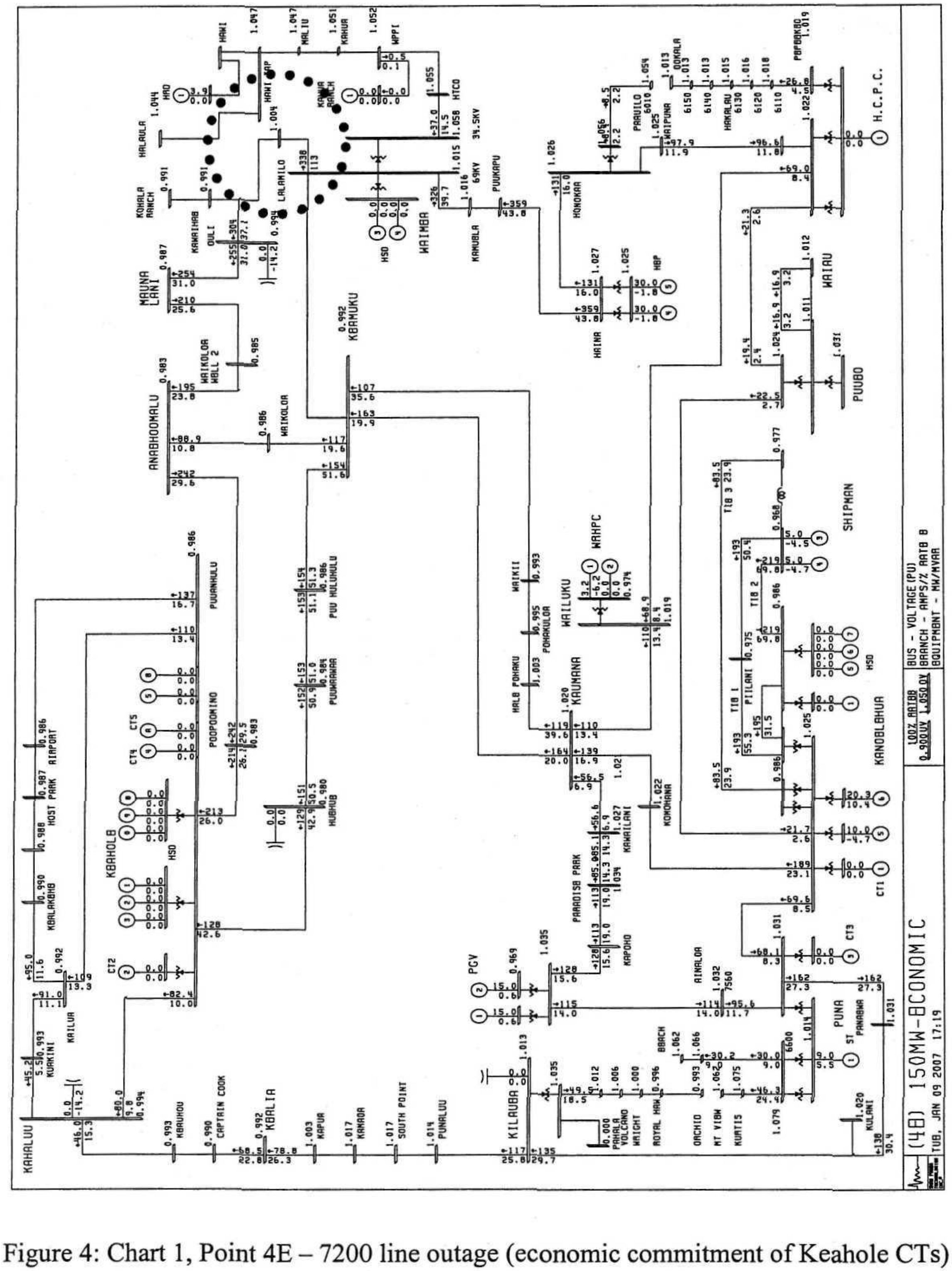

Figure 4: Chart 1, Point 4E – 7200 line outage (economic commitment of Keahole CTs)

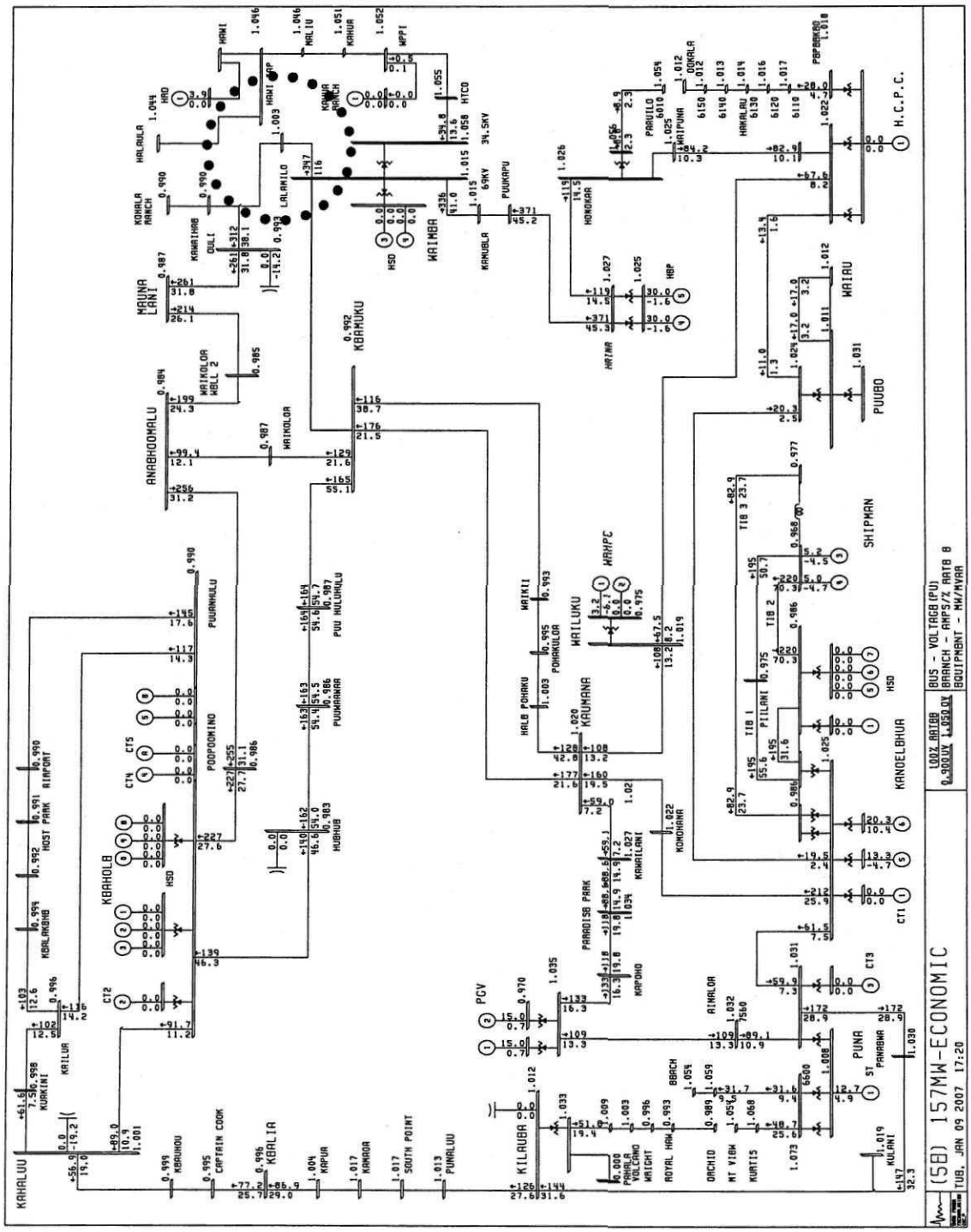

Figure 5: Chart 1, Point 5E – 7200 line outage (economic commitment of Keahole CTs)

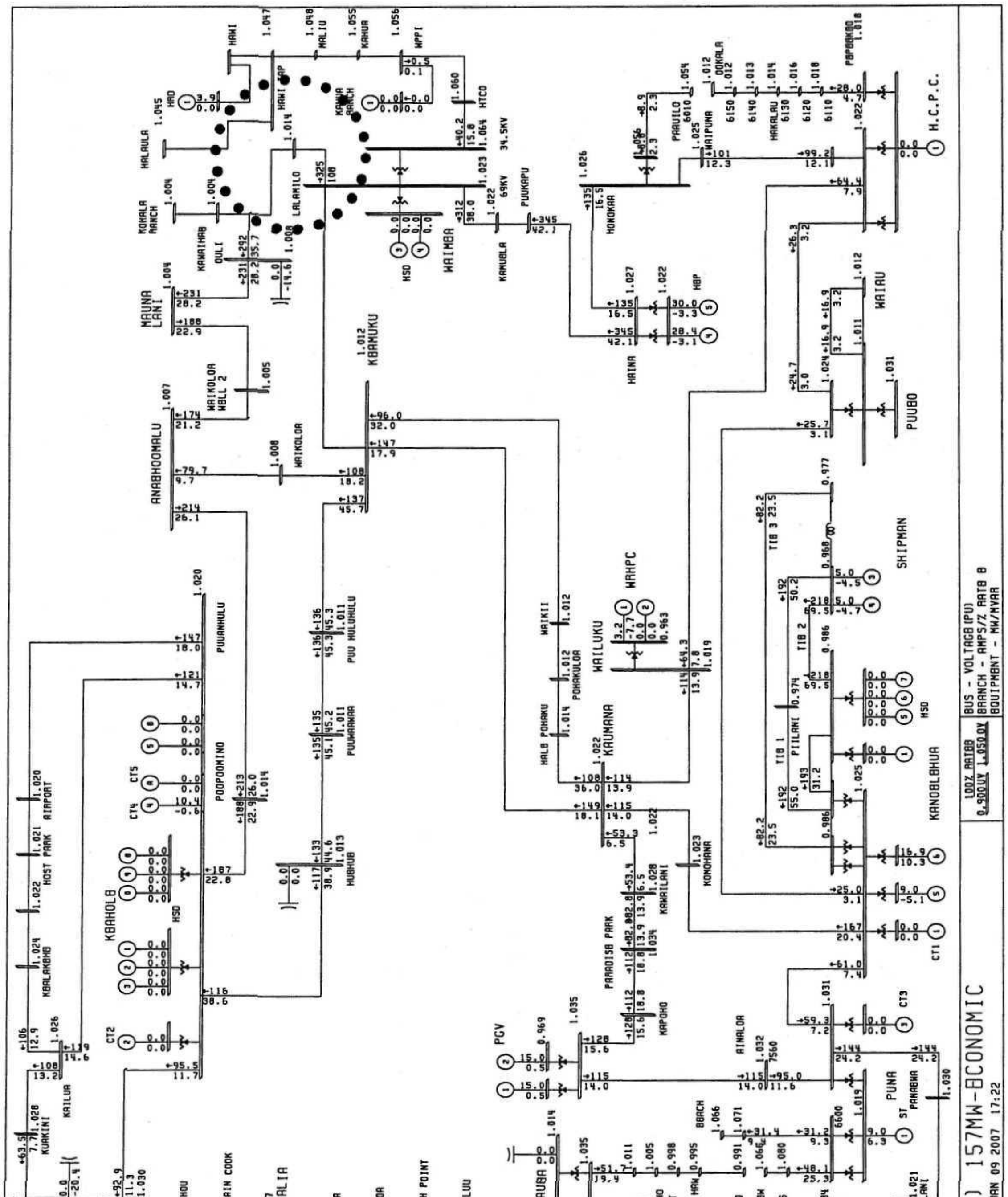

Figure 6: Chart 1, Point 6E – 7200 line outage (economic commitment of Keahole CTs)

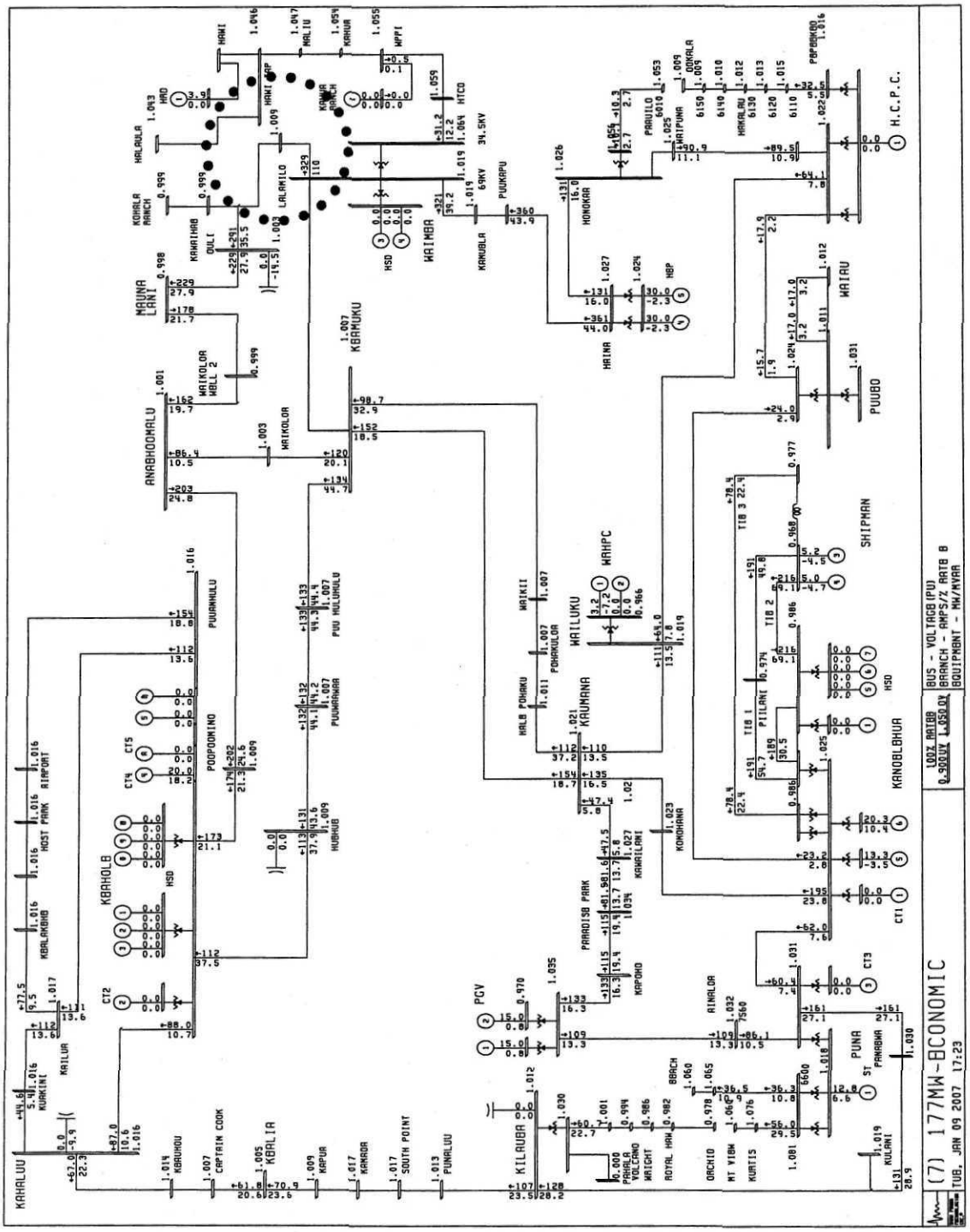

Figure 7: Chart 1, Point 7 – 7200 line outage

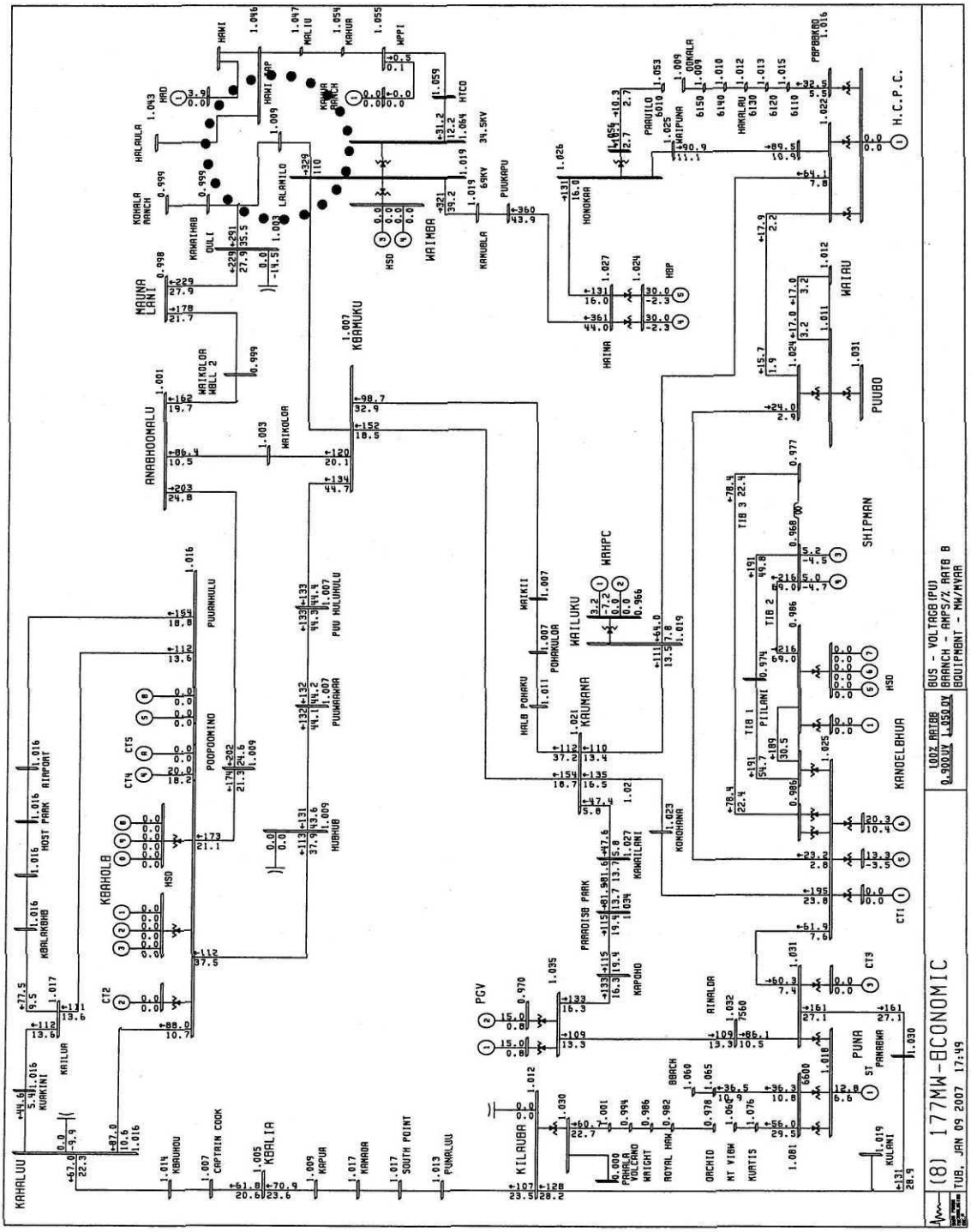

Figure 8: Chart 1, Point 8 – 7200 line outage

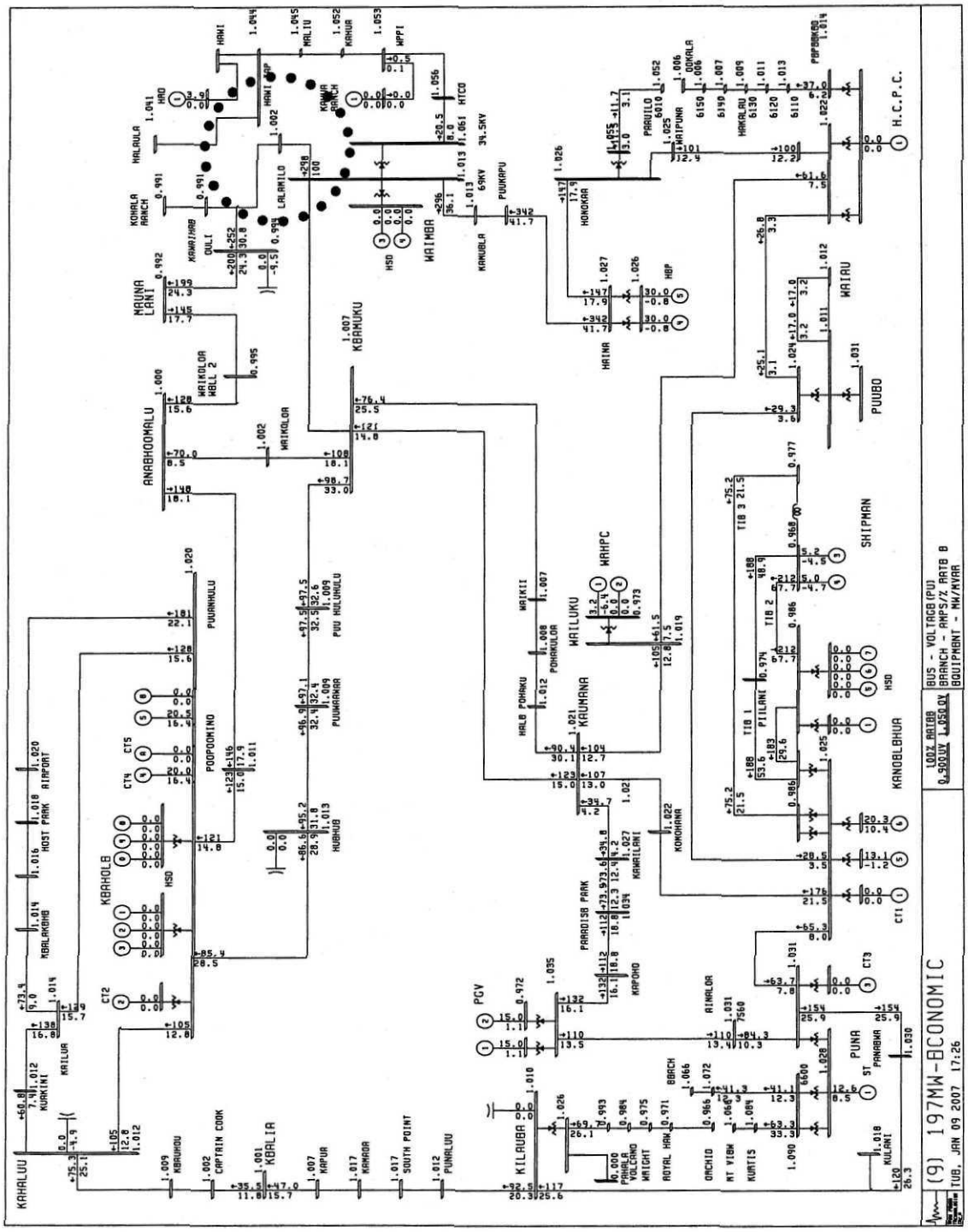

Figure 9: Chart 1, Point 9 – 7200 line outage

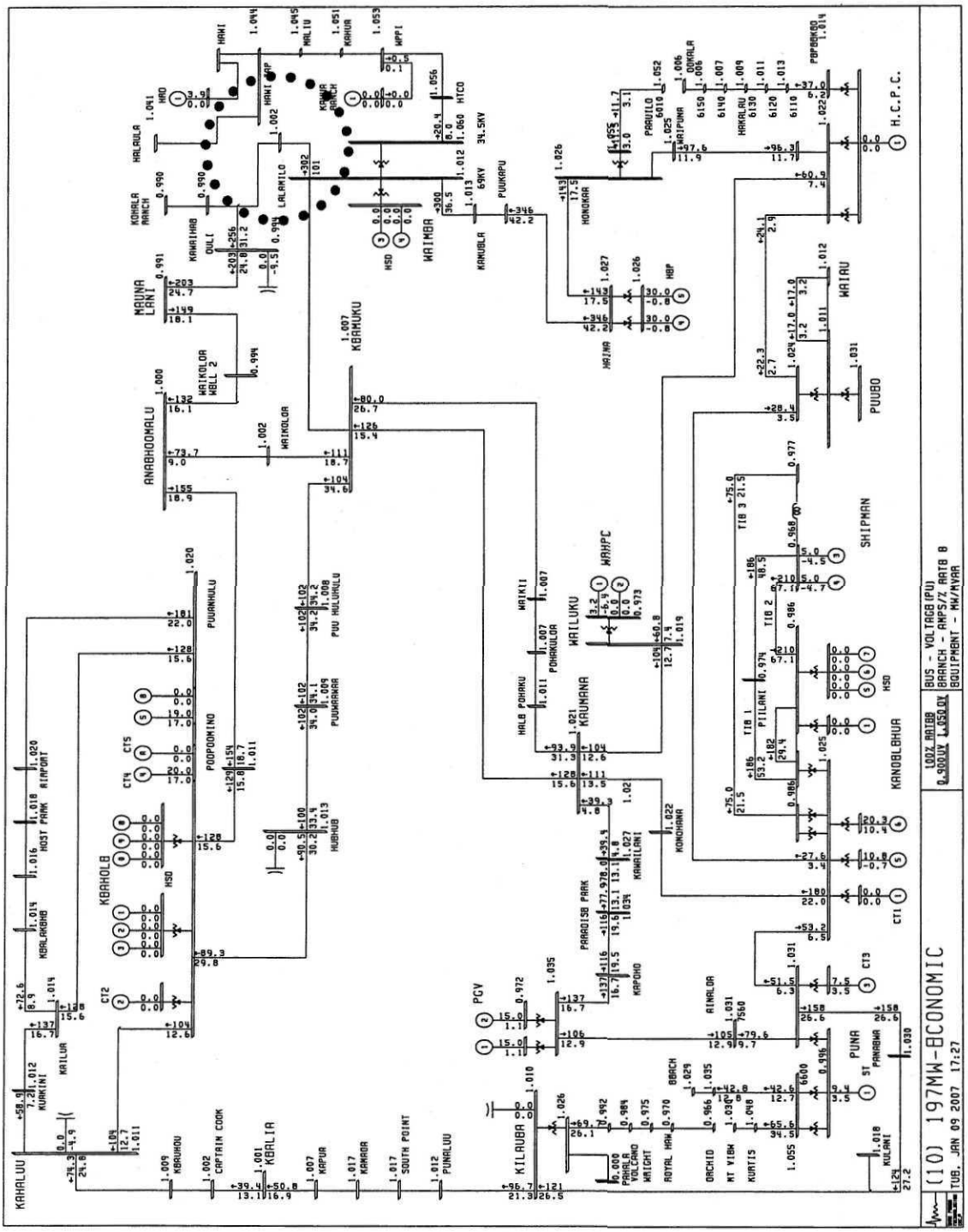
(10) 197MW-ECONOMIC
TUE, JAN 09 2007 17:27
BUS - VOLTAGE(PU)
BRANCH - AMPS/% RATE B
EQUIPMENT - MW/MVAR
KAHALUU
KAILUA
KALIA
KILAUEA
PUNA
KANOELEHUA
SHIPMAN
WAIAU
PUUEO
H.C.P.C.
WAILUKU
KAUNAKAKAI
KAHOLO
KAMAKU
ANAEHOOMALU
MAUNA LANI
WAIMEA
KAMUELA
PAPAIKOU
HILO
KOHALA RANCH
HALAULA
KAWAIHAE
OULI
LALAMILO
HAMI
MALIU
KOHALA
HAPPI
HITCO
PUUKAPU
HONOKAA
PAPAIKOU
OOKALA
HAKALAU
PAPEEKEO
WAIPUNA
PAPUILO
WAIKOLOA
WALL 2
PUUANAHULU
PUU HULUULU
PUUWAIAHA
POOPOOMINO
HUEHUE
HOST PARK
AIRPORT
KEALAKEHE
KURKINI
KAILUA
CAPTAIN COOK
KEALIA
KAPUA
KAMAOA
SOUTH POINT
PUNALUU
PARADISE PARK
KAPOHO
KAWAILANI
KONOHANA
PILANI
TIB 1
TIB 2
TIB 3
WAIKII
POHAKULOA
HALE POHAKU
WAHPC
PGV
RINALOA
BEACH
ROYAL HAW
WRIGHT
ORCHID
MT VIEW
KURTIS
PANAEWA
KULANI
HSO
CT1
CT2
CT3
CT4
CT5
ST
69KV
34.5KV
101
102
103
104
105
106
107
108
109
110
111
112
113
114
115
116
117
118
119
120
121
122
123
124
125
126
127
128
129
130
131
132
133
134
135
136
137
138
139
140

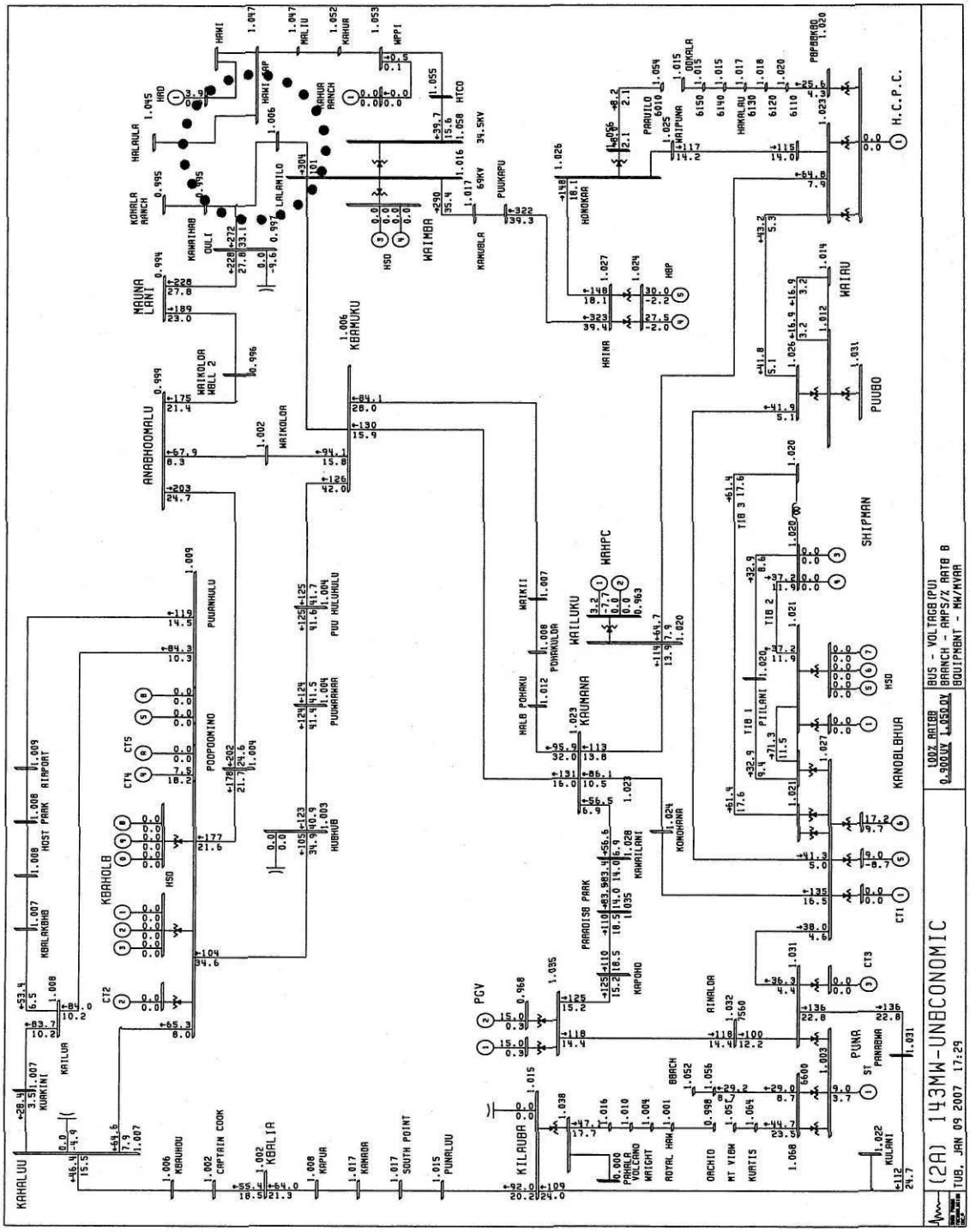

Figure 11: Chart 1, Point 2A – 7200 line outage (earlier commitment of a Keahole CT)

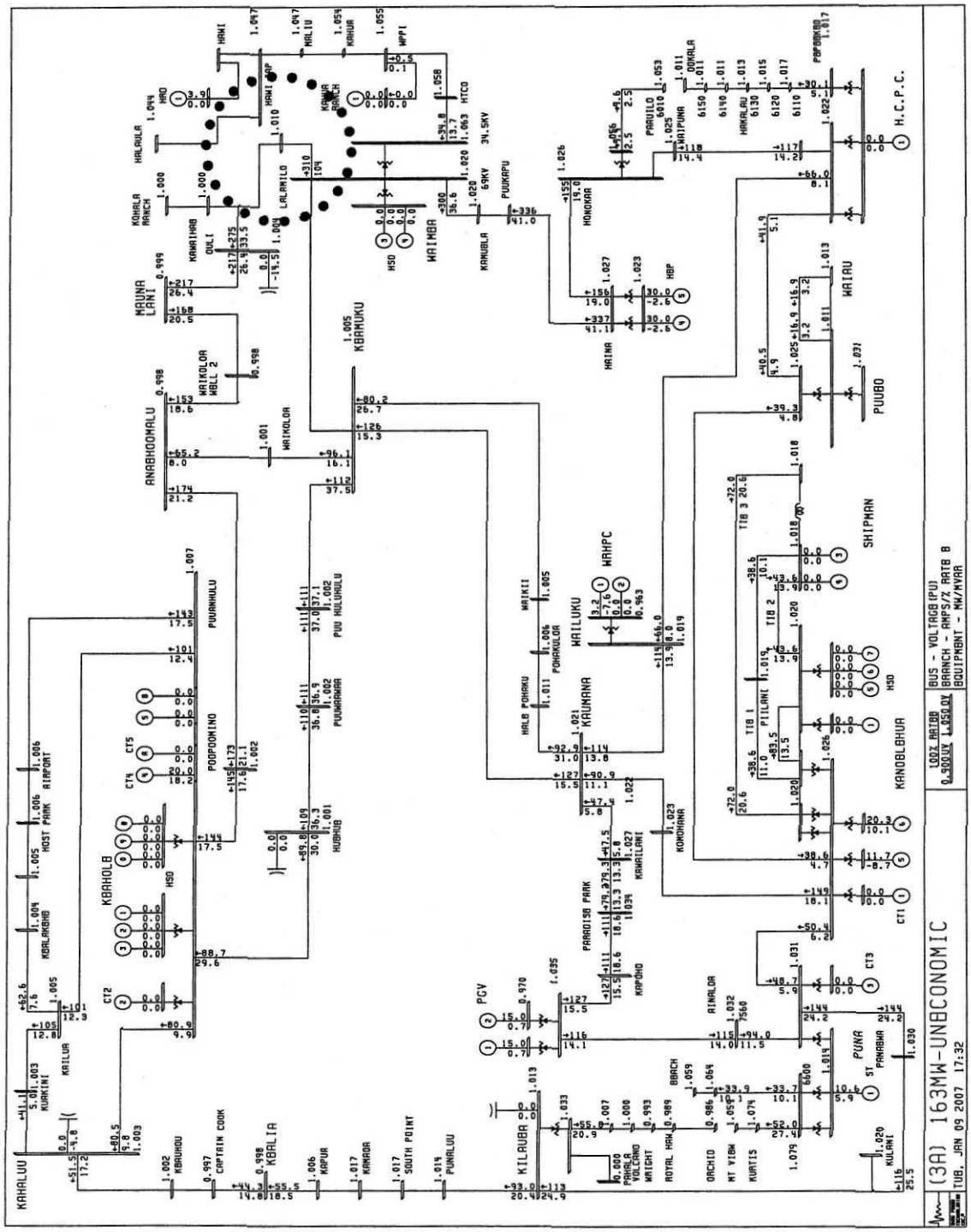

Figure 12: Chart 1, Point 3A – 7200 line outage (earlier commitment of a Keahole CT)

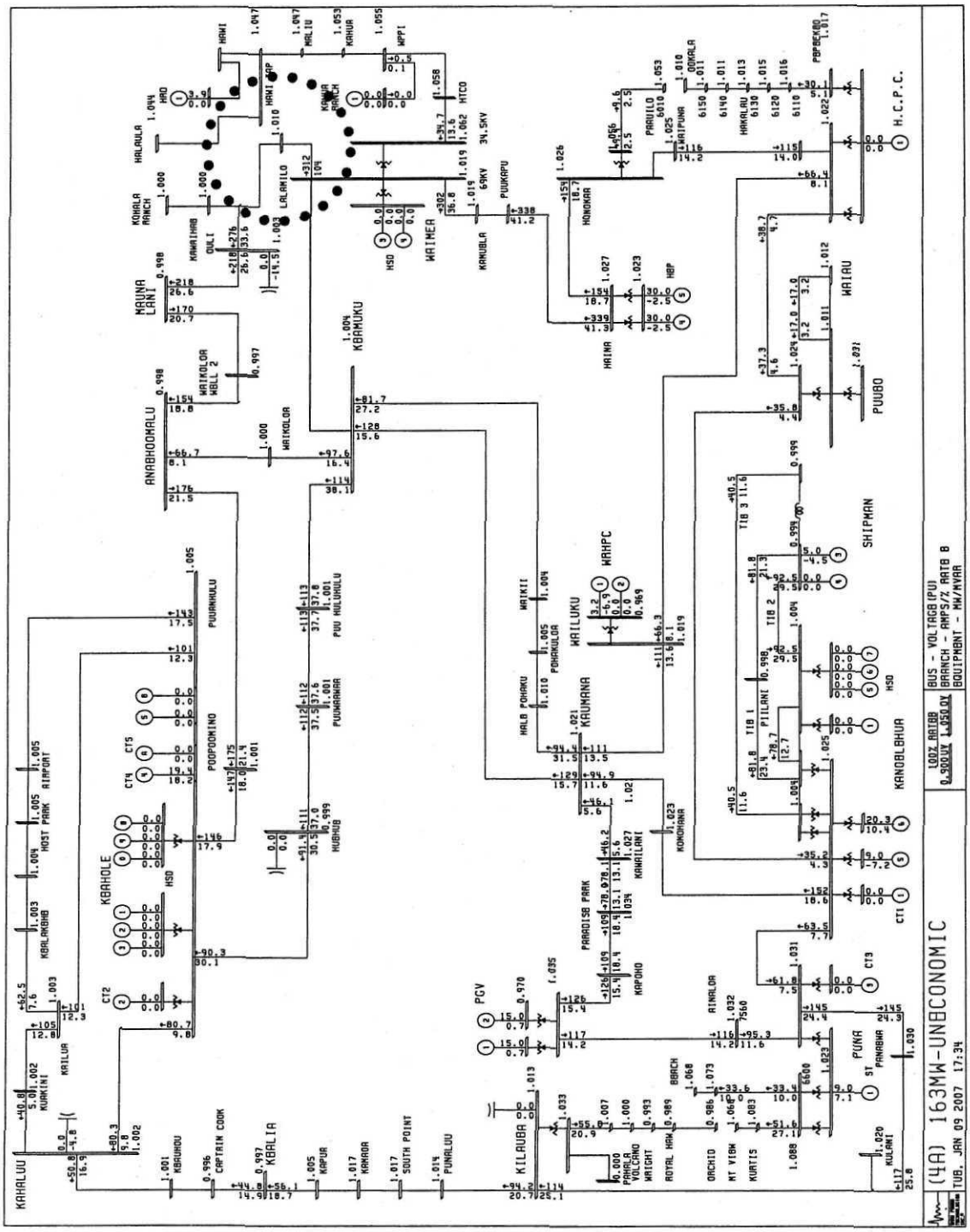

Figure 13: Chart 1, Point 4A – 7200 line outage (earlier commitment of a Keahole CT)

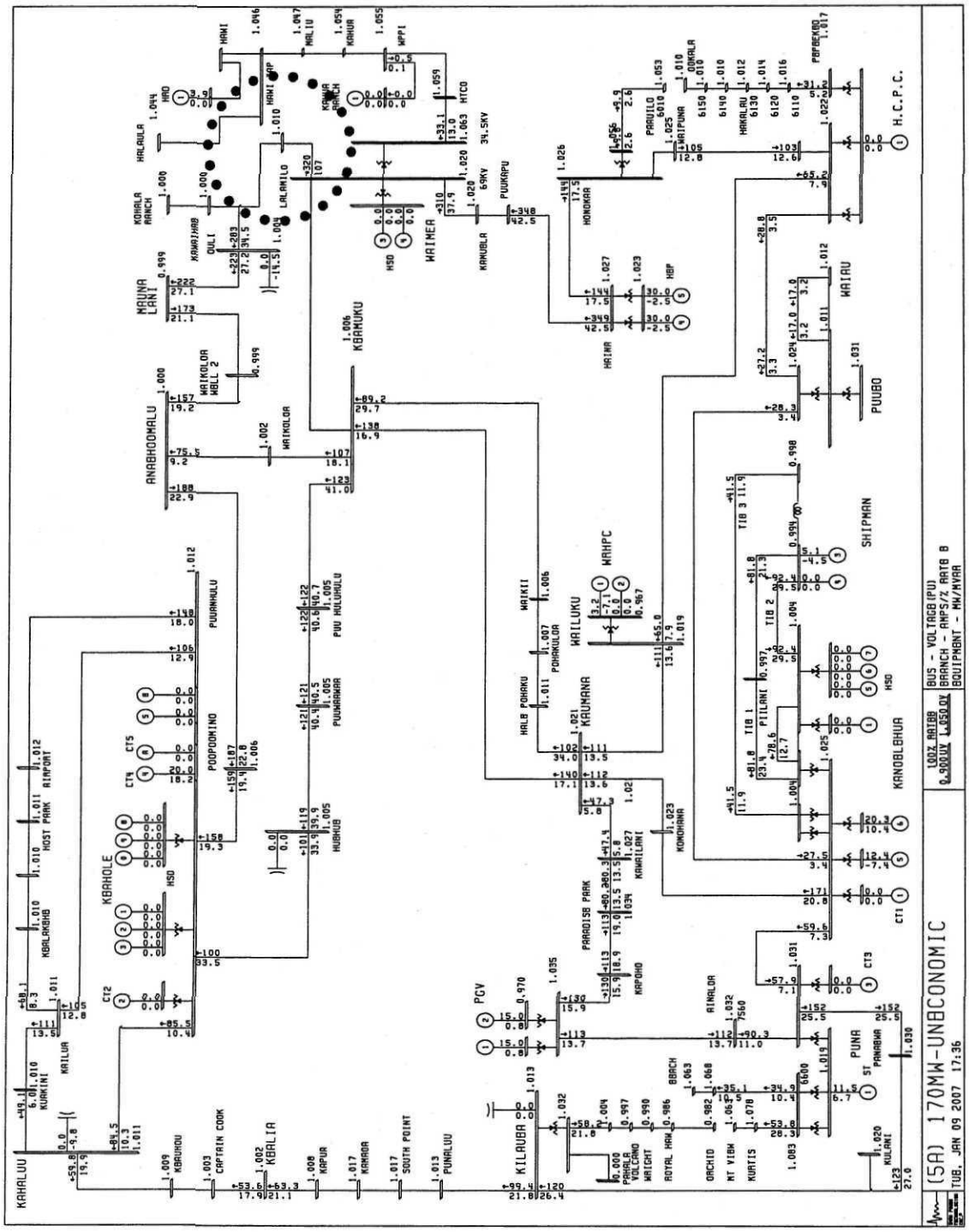

Figure 14: Chart 1, Point 5A – 7200 line outage (earlier commitment of a Keahole CT)

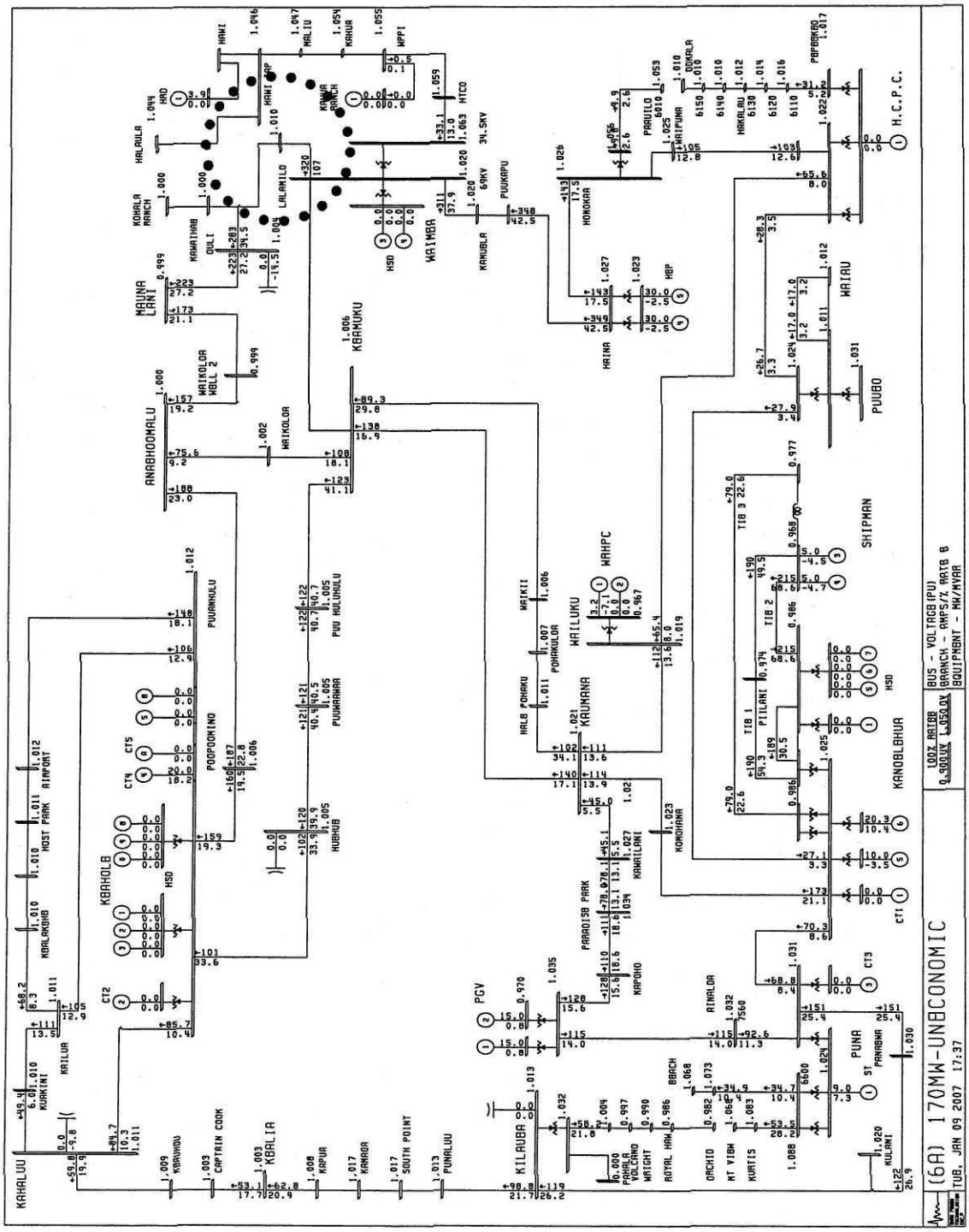

Figure 15: Chart 1, Point 6A – 7200 line outage (earlier commitment of a Keahole CT)

CA-SIR-3.1
Ref: HELCO Response to CA-IR-392 (Updated Sales Levels).

Regarding the statement, "HELCO does not intend to replace forecasted sales data in the referenced exhibits with corresponding actual 2006 sales figures. Recorded annual customer counts and energy sales may not be appropriate for ratemaking purposes due to abnormal events and/or circumstances," please provide the following information.

a. Actual numbers of customers served in each month of 2006, by rate schedule, through December 31, 2006, when available.
b. Identify, describe and quantify each known "abnormal event and/or circumstance" that causes any of the monthly customer data provided in the response to part (a) of this information request to be "not appropriate for ratemaking purposes."
c. If any affirmative response is provided to part (b) of the response to this information request, please provide a complete copy of all reports, analyses, workpapers, projections and other documents associated with each known "abnormal event and/or circumstance" for each rate schedule in each month.
d. Actual kWh sales volumes in each month of 2006, by rate schedule, through December 31, 2006, when available.
e. Identify, describe and quantify each known "abnormal event and/or circumstance" that causes any of the monthly kWh sales data provided in the response to part (d) of this information request to be "not appropriate for ratemaking purposes."
f. If any affirmative response is provided to part (e) of the response to this information request, please provide a complete copy of all reports, analyses, workpapers, projections and other documents associated with each known "abnormal event and/or circumstance" for each rate schedule in each month.

HELCO's Response:

a. See table on page 4.

b. At this time, HELCO is not aware of any specific abnormal events or circumstances that had discernible impacts on customer counts. However, HELCO did not expect the high level of growth in numbers of accounts that is reflected in the recorded numbers, and thus its test year forecast of average customer counts is lower than 2006 recorded average counts in all rate schedules. There were also significant transfers of accounts from Schedule J to Schedule P during 2006 that were not anticipated in the forecast, as well as new Schedule P accounts that were forecasted to begin service in 2006 that have encountered delays to beyond 2006. The recorded customer count data is being provided

as it may be determined to be a basis for making adjustments to the test year estimate for rate-making purposes.

c. Not applicable.

d. See table on page 5.

e. Overall, in 2006 HELCO's recorded total sales were slightly lower than the forecast, by 3.3 GWH, or about 0.3%. Recorded sales for Schedule R and Schedule P were higher than the forecast, while its recorded sales for Schedules G/J and H/K were lower than the forecast.

The destructive earthquake that occurred on October 15, 2006 may have had a significant impact on sales in the Waimea District, which was the area of the Big Island that suffered the most damage. The most obvious single impact of the earthquake was the subsequent closing of the Mauna Kea Beach Hotel in December due to structural damage to the hotel. It is HELCO's understanding that the hotel is still assessing the extent of repairs and renovations to be performed, but the customer currently estimates that it will remained closed for an additional 12-18 months. "December" billed sales for this account reflects a billing cycle that runs from November 4 through December 6, 2006, therefore covers only a portion of the calendar month of December. January, 2007 billed sales reflects a billing cycle that runs from December 6, 2006 to January 6, 2007 and shows that usage has declined by about one-third since the hotel closed. HELCO understands that the hotel continues to operate its chiller to cool and dehumidify unoccupied guest rooms to prevent mold problems. HELCO will continue to monitor sales to this account and will work with the hotel engineer to develop an estimate of electricity usage for 2007 and will include this information in its next sales forecast to be

issued in June, 2007. HELCO also noticed a sharp decrease in overall sales growth in the Waimea District during November, although strong sales growth resumed in December. It is not known what will be the long-term impact of the earthquake will be.

There were also significant transfers of accounts from Schedule J to Schedule P during 2006 that were not anticipated in the forecast, as well as new Schedule P accounts that were forecasted to begin service in 2006 that have encountered delays to beyond 2006. The recorded sales data is being provided as it may be determined to be a basis for making adjustments to the test year estimate for rate-making purposes.

f. A table comparing monthly sales growth by geographic district for 2006 is shown on page 3. See HELCO's response to CA-SIR-4 for data on transfers from Schedule J to Schedule P and for data on forecasted new accounts that were delayed.

Monthly 2006 Sales Growth by Service District (compared to same month in 2005)

Month	Hilo District	Kona District	Waimea District
January	2.0%	6.9%	2.8%
February	4.2%	5.0%	9.7%
March	0.9%	5.9%	5.4%
April	1.3%	1.7%	1.0%
May	-1.2%	4.2%	9.4%
June	1.2%	0.5%	-0.5%
July	0.1%	3.5%	8.7%
August	0.4%	1.3%	10.5%
September	-3.4%	-1.7%	-0.8%
October	3.7%	1.9%	5.3%
November	-0.7%	2.9%	-1.3%
December	3.5%	2.6%	6.4%
Annual	1.0%	2.8%	4.6%

HAWAII ELECTRIC LIGHT COMPANY, INC.

MONTHLY 2006 AVERAGE CUSTOMER (BILL) COUNT

Line	Rate	Jan	Feb	Mar	Apr	May	Jun	Jul	Aug	Sep	Oct	Nov	Dec	Average
1	R	60,956	61,234	61,376	61,467	61,557	61,941	61,939	62,186	62,398	62,586	62,680	62,851	61,931
2	G/J	12,654	12,781	12,887	12,866	12,932	12,957	12,965	13,022	13,082	13,095	13,114	13,094	12,954
3	H/K	280	278	275	270	268	266	268	265	265	263	264	262	269
4	P	61	67	64	64	65	64	67	66	66	66	66	66	65
5	F	124	124	141	125	128	130	127	130	130	134	145	144	132
6	Total	74,075	74,484	74,743	74,792	74,950	75,358	75,366	75,669	75,941	76,144	76,269	76,417	75,351

Note: Totals may not add exactly due to rounding.

HAWAII ELECTRIC LIGHT COMPANY, INC.

MONTHLY 2006 BILLED SALES (GWH)

Line	Rate	Jan	Feb	Mar	Apr	May	Jun	Jul	Aug	Sep	Oct	Nov	Dec	Total
1	R	37.8	35.5	37.2	36.5	35.5	35.9	36.7	37.0	36.6	36.7	37.1	37.4	440.0
2	G/J	36.3	34.7	34.6	33.8	34.6	36.3	37.1	38.1	37.9	38.5	37.7	36.8	436.4
3	H/K	1.4	1.3	1.3	1.3	1.3	1.3	1.5	1.5	1.4	1.4	1.4	1.3	16.4
4	P	19.1	20.1	20.3	19.3	20.2	20.4	21.9	21.6	21.6	21.4	20.9	20.5	247.4
5	F	0.4	0.4	0.4	0.4	0.4	0.4	0.4	0.4	0.4	0.4	0.4	0.4	4.4
6	Total	95.0	92.0	93.8	91.3	92.0	94.4	97.6	98.6	97.9	98.3	97.5	96.3	1,144.7

Note: Totals may not add exactly due to rounding.

CA-SIR-4
Ref: HELCO Response to CA-IR-391, pages 3 and 4 (Schedule P Sales Levels).

Please provide an update of the 2006 test year actual sales to each Schedule P customer through December 31, 2006. If such data includes any individually significant changes or abnormalities in sales volumes due to added or removed loads or unusual circumstances associated with specific customers, please explain and quantify each such change/abnormality.

HELCO's Response:

a. Actual 2006 billed sales to each Schedule P customer account is shown in the table on pages 2 to 5. Please note that the data reflect December 2006 billed sales therefore are not as of December 31, 2006 for all of the accounts, but as of the actual December meter read date. Explanations for actual sales that differ significantly from the forecast are notated for those accounts for which reasons for the difference have been identified. HELCO is still analyzing the billed data and will provide additional explanations if they become available.

Confidential Information
Deleted Pursuant to
Protective Order

The information on this attachment contains confidential information and will be provided pursuant to Protective Order No. 22593 dated June 30, 2006.

CA-SIR-5

Ref: HELCO Test Year Projected Expenses.

Please provide actual 2006 test year actual O&M expenses by detailed NARUC Sub-Account for each month of the test year through December 31, 2006, when available.

HELCO Response:

Attached is a report detailing actual O&M expenses by NARUC account by month from January through December 2006. The Company is submitting this report under Protective Order No. 22593 issued in this proceeding because the monthly O&M expense information for October, November and December 2006 is confidential until the information is publicly disclosed in HECO's Form 10-K financial statements or when the Consumer Advocate submits its testimony in this proceeding, which is scheduled for February 21, 2007. The December 2006 O&M results are preliminary. Although the Company does not anticipate that these O&M results will change, they will not be considered final until the Company issues its financial statements to the Securities and Exchange Commission, currently scheduled for February 28, 2007. Should any of the enclosed results change, the Company will provide the revisions as soon as practicable.

Confidential Information Deleted
Pursuant to Protective Order

The information on this attachment contains confidential information and will be provided pursuant to Protective Order No. 22593 dated June 30, 2006.

CA-SIR-5

Ref: HELCO Test Year Projected Expenses.

Please provide actual 2006 test year actual O&M expenses by detailed NARUC Sub-Account for each month of the test year through December 31, 2006, when available.

HELCO Response:

Attached is a report detailing actual O&M expenses by NARUC account by month from January through November 2006. The report is being submitted under Protective Order No. 22593 issued in this proceeding because the monthly O&M expense information for October and November 2006 is confidential until the information is publicly disclosed in HECO's Form 10-K financial statements or when the Consumer Advocate submits its testimony in this proceeding, which is scheduled for February 21, 2007. O&M expense information for December 2006 is not yet available. Preliminary O&M expense information for December 2006 will be available around January 29, 2007. HELCO will provide an updated report which will include preliminary December 2006 information at that time. Such report will also be submitted under protective order as the December 2006 information will be confidential until the information is publicly disclosed in HECO's Form 10-K financial statements or when the Consumer Advocate includes such information in its testimony in this proceeding, which is scheduled for February 21, 2007.

Confidential Information
Deleted Pursuant to
Protective Order

The information on this attachment contains confidential information and will be provided pursuant to Protective Order No. 22593 dated June 30, 2006.

CA-SIR-6

Ref: HELCO Test Year Direct Labor Expenses.

Please provide actual 2006 test year actual labor expenses by RA and expense element for each month of the test year through December 31, 2006, when available.

HELCO Response:

Attached is a report detailing actual labor expenses by RA by NARUC account by month from January through December 2006. The Company is submitting this report under Protective Order No. 22593 issued in this proceeding because the monthly labor expense information for October, November and December 2006 is confidential until the information is publicly disclosed in HECO's Form 10-K financial statements or when the Consumer Advocate submits its testimony in this proceeding, which is scheduled for February 21, 2007. The December 2006 labor expense results are preliminary. Although the Company does not anticipate that these labor expense results will change, they will not be considered final until the Company issues its financial statements to the Securities and Exchange Commission, currently scheduled for February 28, 2007. Should any of the enclosed results change, the Company will provide the revisions as soon as practicable.

Confidential Information Deleted
Pursuant to Protective Order

The information on this attachment contains confidential information and will be provided pursuant to Protective Order No. 22593 dated June 30, 2006. In addition, the requested information is voluminous, and is available for inspection at HECO's Regulatory Affairs Division office, Suite 1301, Central Pacific Plaza, 220 South King Street, Honolulu, Hawaii. Please contact Dean Matsuura at 543-4622 to make arrangements to inspect the requested information. One copy will be provided to the Consumer Advocate and the Public Utilities Commission, respectively.

CA-SIR-6

Ref: HELCO Test Year Direct Labor Expenses.

Please provide actual 2006 test year actual labor expenses by RA and expense element for each month of the test year through December 31, 2006, when available.

HELCO Response:

Attached is a report detailing actual labor expenses by RA by NARUC account by month from January through November 2006. The report is being submitted under Protective Order No. 22593 issued in this proceeding because the monthly O&M expense information for October and November 2006 is confidential until the information is publicly disclosed in HECO's Form 10-K financial statements or when the Consumer Advocate submits its testimony in this proceeding, which is scheduled for February 21, 2007. O&M labor information for December 2006 is not yet available. Preliminary information for December 2006 will be available around January 29, 2007. HELCO will provide an updated report which will include preliminary December 2006 information at that time. Such report will also be submitted under protective order as the December 2006 information will be confidential until the information is publicly disclosed in HECO's Form 10-K financial statements or when the Consumer Advocate includes such information in its testimony in this proceeding, which is scheduled for February 21, 2007.

Confidential Information
Deleted Pursuant to
Protective Order

The information on this attachment contains confidential information and will be provided pursuant to Protective Order No. 22593 dated June 30, 2006. The requested information is voluminous, and is available for inspection at HECO's Regulatory Affairs Division office, Suite 1301, Central Pacific Plaza, 220 South King Street, Honolulu, Hawaii. Please contact Dean Matsuura at 543-4622 to make arrangements to inspect the requested information. One copy will be provided to the Consumer Advocate and the Public Utilities Commission, respectively.

CA-SIR-7

Ref: HELCO Response to CA-IR-255 (Unit Overhaul Commitments and Actual Spending).

Please provide the following updated information through December 31, 2006, when available.

a. Updated "Committed Amounts" for the data table on page 3 of the response, broken down by primary vendor in as much detail as readily available.

b. Updated Attachment 2, with column G updated to include 2006 Actual data through December 31.

HELCO Response:

a. Outstanding commitments as of December 31, 2006 are as follows:

Unit Overhaul	Committed Amount as of 12/31/06	Primary Vendor
CT-2 Major Field Inspection	$189,000	SIEMENS DEMAG DELAVAL
CT-4 Hot Section	$10,080	ENDRESS + HAUSER C/O INNOVATIV
Hill 5 Boiler Inspection	$56,820	PETROCHEM INSULATION INC.; HDR ENGINEERING, INC.
Puna Boiler Inspection	$266,853	HAMON CUSTODIS, INC.
Hill 6 Boiler Inspection	$52,321	SWITCHGEAR & POWER SERVICES, LTD.

b. 2006 recorded data through December 31, 2006 for column G is shown in Attachment 1. The 2006 recorded data are preliminary. Although the Company does not anticipate that these expenses will change, they will not be considered final until the Company issues its financial statements to the Securities and Exchange Commission, currently scheduled for February 28, 2007. Should any of the enclosed amounts change, the Company will provide the revisions as soon as practicable.

(UPDATED CA-IR-255, ATTACHMENT 2)

Hawaii Electric Light Company Inc.

2006 TEST YEAR
2000 - 2006 O&M History - Overhauls

Source: Essbase D HG0 Generation, Ellipse on 01/16/07

Description	RA	A YearTotal 2000_Actual	B YearTotal 2001_Actual	C YearTotal 2002_Actual	D YearTotal 2003_Actual	E YearTotal 2004_Actual	F YearTotal 2005_Actual	G (1/1/06 to 12/31/06) YearTotal 2006_Actual	H YearTotal Unadjusted 2006_Budget with Oncosts	I (Non-Labor) Adjustments	J Adjusted 2006_Budget with Oncosts	K (Non-Labor) Normalizations	L 2006 Normalized Test Year Estimate with Oncosts	M Actual 1/1/2000 to 7/31/2006 Labor	N = Sum(A to G) - M Non-Labor
Puna Steam Unit															
PR H0000042 PunaOvrhal	HGM	1,106	-	-	-	-	-	247	-	-	-	-	-	-	1,353
PR H0000170 Puna Ohaul	HGM	90,122	865	77	-	428	-	-	-	-	-	-	-	34,699	56,793
PR H0000356 Puna Turb Ovh	HGM	-	421,754	(5,916)	49,403	-	-	-	-	-	-	-	-	133,024	332,217
PR H0000601 P1Turb Ovh '0	HGM	-	-	396,793	-	-	-	-	-	-	-	-	-	67,225	329,568
PR H0000610 P1insp'03	HGM	-	-	-	390,247	169,359	(24,008)	-	-	-	-	-	-	92,830	442,767
PR H0000696 Punainsp04	HGM	-	-	-	-	363,925	28,162	-	-	-	-	-	-	112,086	280,000
PR H0001214 Punainsp05	HGM	-	-	-	-	-	683,161	14,751	-	-	-	-	-	73,575	624,337
PR H0001400 Punainsp06	HGM	-	-	-	-	-	-	415,487	403,012	-	403,012	-	403,012	1,186	414,301
		91,228	422,619	390,954	439,650	533,711	687,314	430,484	403,012	-	403,012	-	403,012	514,625	2,481,336
Shipman 3															
PR H0000034 S3Overhaul	HGM	-	-	-	-	149	-	-	-	-	-	-	-	149	0
PR H0000163 Shp3 Ohaul	HGM	147,208	7,954	-	-	-	-	-	-	-	-	-	-	38,958	116,205
PR H0000602 S3 Insp'02	HGM	-	-	26,666	55,948	-	-	-	-	-	-	-	-	2,909	79,705
PR H0000604 S3 insp 03	HGM	-	-	-	492,086	72,397	-	-	-	-	-	-	-	105,337	459,147
PR H0000688 S3 Turb OH 04	HGM	-	-	-	-	641,972	70,133	-	-	-	-	-	-	130,310	581,795
PR H0001209 S3 Insp 05	HGM	-	-	-	-	-	135,967	3,454	-	-	-	-	-	39,832	99,588
PR H0001403 S3 Insp 06	HGM	-	-	-	-	-	-	904,645	286,636	-	286,636	42,000	328,636	-	904,645
		147,208	7,954	26,666	548,034	714,518	206,100	908,098	286,636	-	286,636	42,000	328,636	317,494	2,241,085
Shipman 4															
PR H0000035 S4Overhaul	HGM	-	-	-	-	-	-	2,439	-	-	-	-	-	2,439	(0)
PR H0000164 Shp4 Ohaul	HGM	152,609	-	-	-	-	-	-	-	-	-	-	-	38,350	114,260
PR H0000359 S4 Blrinsp	HGM	-	133	-	-	-	-	-	-	-	-	-	-	131	3
PR H0000603 S4 Insp'02	HGM	-	-	4,966	4,368	-	-	-	-	-	-	-	-	1,174	8,160
PR H0000605 S4 Turb OH '0	HGM	-	-	-	664,783	99,435	-	-	-	-	-	-	-	93,383	670,835
PR H0000689 S4 Inst 04	HGM	-	-	-	-	29,443	17,277	-	-	-	-	-	-	1,499	45,220
PR H0001210 S4 Insp 05	HGM	-	-	-	-	-	387,285	-	-	-	-	-	-	76,980	310,305
PR H0001404 S4 Insp 06	HGM	-	-	-	-	-	-	722,538	286,636	-	286,636	42,000	328,636	-	722,538
		152,609	133	4,966	669,151	128,877	404,561	724,977	286,636	-	286,636	42,000	328,636	213,955	1,871,320
Hill 5															
PR H0000036 H5Overhaul	HGM	1,373	-	-	-	-	-	-	-	-	-	-	-	-	1,373
PR H0000165 H5 Ohaul	HGM	233,372	402	-	-	-	-	-	-	-	-	-	-	75,326	158,448
PR H0000360 H5Ovhl2001	HGM	-	152,659	1,155	-	-	-	-	-	-	-	-	-	64,127	89,686
PR H0000597 H5 Turb OH '0	HGM	-	-	831,962	4,868	-	-	-	-	-	-	-	-	173,898	662,932
PR H0000606 H5 Insp '03	HGM	-	-	7,074	613,223	38,140	-	-	-	-	-	-	-	111,522	546,914
PR H0000690 H5 Insp 04	HGM	-	-	-	-	201,620	11,089	-	-	-	-	-	-	44,243	168,665
PR H0001211 H5 Insp 05	HGM	-	-	-	-	-	437,224	24,372	-	-	-	-	-	102,270	359,327
PR H0001399 H5 Insp 06	HGM	-	-	-	-	-	-	341,632	471,445	-	471,445	-	471,445	68,429	273,203
		234,745	153,061	840,191	618,091	239,960	448,313	366,004	471,445	-	471,445	-	471,445	639,817	2,260,549
Hill 6															
PR H0000038 H6 Ohaul	HGM	-	-	-	-	-	-	940	-	-	-	-	-	940	-
PR H0000166 H6 Ohaul	HGM	412,796	4,870	-	8,859	-	-	-	-	-	-	-	-	108,906	317,620
PR H0000362 H6 Blrinsp	HGM	-	130,636	-	-	-	-	-	-	-	-	-	-	45,029	85,607
PR H0000598 H6insp'02	HGM	-	-	477,134	3,614	-	-	-	-	-	-	-	-	142,352	338,397
PR H0000608 H6 Turb OH '0	HGM	-	-	2,735	820,779	156,398	-	-	-	-	-	-	-	120,887	859,024
PR H0000692 H6 Insp 04	HGM	-	-	-	-	334,745	45,491	-	-	-	-	-	-	71,603	308,634
PR H0001212 H6 Insp 05	HGM	-	-	-	-	-	325,343	194	-	-	-	-	-	68,396	257,141
PR H0001402 H6 Insp 06	HGM	-	-	-	-	-	-	878,355	767,326	-	767,326	230,000	997,326	95,540	782,814
		412,796	135,506	479,869	833,253	491,143	370,834	879,489	767,326	-	767,326	230,000	997,326	653,654	2,949,237

(UPDATED CA-IR-255, ATTACHMENT 2)

Hawaii Electric Light Company Inc.

2006 TEST YEAR

2000 - 2006 O&M History - Overhaul

Source: Essbase D HG0 Generation, Ellip

Description	RA	O Adjusted 2006_Budget without Oncosts	P 2006 Normalized Test Year Estimate without Oncosts
Puna Steam Unit			
PR H0000042 PunaOvrhal	HGM		
PR H0000170 Puna Ohaul	HGM		
PR H0000356 Puna Turb Ovh	HGM		
PR H0000601 P1Turb Ovh '0	HGM		
PR H0000610 P1insp'03	HGM		
PR H0000696 Punainsp04	HGM		
PR H0001214 PunaInsp05	HGM		
PR H0001400 PunaInsp06	HGM	334,000	334,000
		334,000	**334,000**
Shipman 3			
PR H0000034 S3Overhaul	HGM		
PR H0000163 Shp3 Ohaul	HGM		
PR H0000602 S3 Insp'02	HGM		
PR H0000604 S3 insp 03	HGM		
PR H0000688 S3 Turb OH 04	HGM		
PR H0001209 S3 Insp 05	HGM		
PR H0001403 S3 Insp 06	HGM	229,000	271,000
		229,000	**271,000**
Shipman 4			
PR H0000035 S4Overhaul	HGM		
PR H0000164 Shp4 Ohaul	*HGM*		
PR H0000359 S4 BlrInsp	HGM		
PR H0000603 S4 Insp'02	HGM		
PR H0000605 S4 Turb OH '0	HGM		
PR H0000689 S4 Inst 04	HGM		
PR H0001210 S4 Insp 05	HGM		
PR H0001404 S4 Insp 06	HGM	229,000	271,000
		229,000	**271,000**
Hill 5			
PR H0000036 H5Overhaul	HGM		
PR H0000165 H5 Ohaul	HGM		
PR H0000360 H5Ovhl2001	HGM		
PR H0000597 H5 Turb OH '0	HGM		
PR H0000606 H5 Insp '03	HGM		
PR H0000690 H5 Insp 04	HGM		
PR H0001211 H5 Insp 05	HGM		
PR H0001399 H5 Insp 06	HGM	413,000	413,000
		413,000	**413,000**
Hill 6			
PR H0000038 H6 Ohaul	HGM		
PR H0000166 H6 Ohaul	HGM		
PR H0000362 H6 BlrInsp	HGM		
PR H0000598 H6insp'02	HGM		
PR H0000608 H6 Turb OH '0	HGM		
PR H0000692 H6 Insp 04	HGM		
PR H0001212 H6 Insp 05	HGM		
PR H0001402 H6 Insp 06	HGM	412,000	642,000
		412,000	**642,000**

Hawaii Electric Light Company Inc.

2006 TEST YEAR

2000 - 2006 O&M History - Overhauls

Source: Essbase D HG0 Generation, Ellipse on 01/16/07

Description	RA	A YearTotal 2000_Actual	B YearTotal 2001_Actual	C YearTotal 2002_Actual	D YearTotal 2003_Actual	E YearTotal 2004_Actual	F YearTotal 2005_Actual	G (1/1/00 to 12/31/06) YearTotal 2006_Actual	H YearTotal Unadjusted 2006_Budget with Oncosts	I (Non-Labor) Adjustments	J Adjusted 2006_Budget with Oncosts	K (Non-Labor) Normalizations	L 2006 Normalized Test Year Estimate with Oncosts	M Actual 1/1/2000 to 7/31/2006 Labor	N = Sum(A to G) - M Non-Labor
CT-1															
PR H0000167 CT1 Insp	HGM	16,456	-	-	-	-	-	-	-	-	-	-	-	7,122	9,334
PR H0000355 CT1GenInsp	HGM	-	59	-	-	-	-	-	-	-	-	-	-	59	0
PR H0000671 CT1 rewind	HGX	-	-	351,124	111,607	4,144	-	-	-	-	-	-	-	31,266	435,608
PR H0001216 CT1 Insp05	HGX	-	-	-	-	-	131,280	-	-	-	-	-	-	34,373	96,907
PR H0001396 CT1 Insp06	HGX	-	-	-	-	-	-	58,244	57,339	-	57,339	-	57,339	31	58,213
		16,456	59	351,124	111,607	4,144	131,280	58,244	57,339	-	57,339	-	57,339	72,850	600,063
CT-2															
PR H0000041 CT2Ovrhaul	HGM	13,273	-	-	-	-	-	-	-	-	-	-	-	-	13,273
PR H0000168 CT2 Insp	HGM	100,618	21,973	9,453	-	-	-	-	-	-	-	-	-	30,159	101,884
PR H0000600 CT2Insp'02	HGM	-	-	2,300	5,635	-	-	-	-	-	-	-	-	418	7,517
PR H0000609 CT2Insp'03	HGM	-	-	-	123,737	-	-	-	-	-	-	-	-	29,461	94,276
PR H0000695 CT2 Insp04	HGK	-	-	-	-	159,755	-	-	-	-	-	-	-	12,993	146,761
PR H0001215 CT2 Insp05	HGK	-	-	-	-	-	1,090,863	433,254	-	-	-	-	-	51,451	1,472,667
PR H0001397 CT2 MFI06	HGK	-	-	-	-	-	-	555,686	2,146,227	(700,000)	1,446,227	(700,000)	746,227	6,459	549,227
		113,892	21,973	11,753	129,371	159,755	1,090,863	988,941	2,146,227	(700,000)	1,446,227	(700,000)	746,227	130,942	2,385,605
CT-3															
PR H0000169 CT3 Insp	HGM	248,800	42	-	538	-	-	-	-	-	-	-	-	30,159	219,221
PR H0000037 CT3Ovrhaul	HGM	1,526	-	-	-	-	-	-	-	-	-	-	-	1,526	(0)
PR H0000599 CT3 HS '02	HGM	-	-	670	-	-	-	-	-	-	-	-	-	670	0
PR H0000607 CT3insp'03	HGM	-	-	556	46,928	1,190	-	-	-	-	-	-	-	13,965	34,709
PR H0000691 CT3 Insp04	HGX	-	-	-	-	8,897	43,055	-	-	-	-	-	-	-	51,952
PR H0001213 CT3 Insp05	HGX	-	-	-	-	-	163,095	55,426	-	-	-	-	-	28,445	190,077
PR H0001395 CT3 Insp06	HGX	-	-	-	-	-	-	73,859	73,524	-	73,524	-	73,524	618	73,241
		250,325	42	1,226	47,466	10,087	206,150	129,285	73,524	-	73,524	-	73,524	75,383	569,199
CT-4															
PR H0000039 CT4Ovrhaul	HGM	-	-	-	-	-	159,532	-	-	-	-	-	-	12,451	147,081
PR H0001398 CT4 Gen06	HGK	-	-	-	-	-	-	991,106	63,232	845,000	908,232	-	908,232	3,948	987,157
		-	-	-	-	-	159,532	991,106	63,232	845,000	908,232	-	908,232	16,399	1,134,238
CT-5															
PR H0000040 CT5Ovrhaul	HGM	-	-	-	-	-	21,050	-	-	-	-	-	-	1,922	19,128
PR H0001401 CT5 Hot06	HGK	-	-	-	-	-	-	27,701	1,505,720	(1,405,000)	100,720	-	100,720	7,342	20,359
		-	-	-	-	-	21,050	27,701	1,505,720	(1,405,000)	100,720	-	100,720	9,264	39,487
Diesels															
PR H0000357 Kea D21 OH	HGM	-	141,188	133,438	-	-	-	-	-	-	-	-	-	43,635	230,991
PR H0000670 Kan15 OH	HGX	-	-	228,752	67,301	-	-	-	-	-	-	-	-	32,287	263,765
PR H0000697 Kan16 OH	HGX	-	-	-	350,781	13,432	-	-	-	-	-	-	-	68,139	296,074
PR H0000775 Wma13 OH	HGX	-	-	192,852	124,976	-	-	-	-	-	-	-	-	33,795	284,033
PR H0000778 Kea22 Ovhl	HGK	-	-	0	337,487	-	-	-	-	-	-	-	-	41,870	295,617
PR H0001005 Wma14 Ovhl	HGX	-	-	-	-	219,421	55,002	-	-	-	-	-	-	46,126	228,297
PR H0001110 Kea23 Ovhl	HGK	-	-	-	-	77,780	216,591	-	-	-	-	-	-	62,741	231,630
PR H0001218 Swing Engine	HGX	-	-	-	-	-	184,250	48,397	-	-	-	350,000	350,000	28,583	204,064
PR H0001247 Wma12 OH	HGX	-	-	-	-	-	372,751	4	-	-	-	-	-	74,101	298,654
		-	141,188	555,041	880,546	310,633	828,594	48,401	-	-	-	350,000	350,000	431,278	2,333,125
Disb Gen Diesels															
Disb Gen Unit Overhaul	HGX	-	-	-	-	-	-	-	-	-	-	150,000	150,000	-	-
		-	-	-	-	-	-	-	-	-	-	150,000	150,000	-	-
Total Overhauls		1,419,259	882,536	2,661,790	4,277,169	2,592,828	4,554,592	5,552,730	6,061,097	(1,260,000)	4,801,097	114,000	4,915,097	3,075,661	18,865,243

(UPDATED CA-IR-255, ATTACHMENT 2)

(UPDATED CA-IR-255, ATTACHMENT 2)

Hawaii Electric Light Company Inc.

2006 TEST YEAR

2000 - 2006 O&M History - Overhaul

Source: Essbase D HG0 Generation, Ellips

Description	RA	O Adjusted 2006_Budget without Oncosts	P 2006 Normalized Test Year Estimate without Oncosts
CT-1			
PR H0000167 CT1 Insp	HGM		
PR H0000355 CT1GenInsp	HGM		
PR H0000671 CT1 rewind	HGX		
PR H0001216 CT1 Insp05	HGX		
PR H0001396 CT1 Insp06	HGX	43,000	43,000
		43,000	**43,000**
CT-2			
PR H0000041 CT2Ovrhaul	HGM		
PR H0000168 CT2 Insp	HGM		
PR H0000600 CT2Insp'02	HGM		
PR H0000609 CT2insp'03	HGM		
PR H0000695 CT2 Insp04	HGK		
PR H0001215 CT2 Insp05	HGK		
PR H0001397 CT2 MFI06	HGK	2,000,000	1,300,000
		2,000,000	**1,300,000**
CT-3			
PR H0000169 CT3 Insp	HGM		
PR H0000037 CT3Ovrhaul	HGM		
PR H0000599 CT3 HS '02	HGM		
PR H0000607 CT3insp'03	HGM		
PR H0000691 CT3 Insp04	HGX		
PR H0001213 CT3 Insp05	HGX		
PR H0001395 CT3 Insp06	HGX	58,000	58,000
		58,000	**58,000**
CT-4			
PR H0000039 CT4Ovrhaul	*HGM*		
PR H0001398 CT4 Gen06	HGK	844,000	55,000
		844,000	**55,000**
CT-5			
PR H0000040 CT5Ovrhaul	HGM		
PR H0001401 CT5 Hot06	HGK	55,000	844,000
		55,000	**844,000**
Diesels			
PR H0000357 Kea D21 OH	HGM		
PR H0000670 Kan15 OH	HGX		
PR H0000697 Kan16 OH	HGX		
PR H0000775 Wma13 OH	HGX		
PR H0000778 Kea22 Ovhl	HGK		
PR H0001005 Wma14 Ovhl	HGX		
PR H0001110 Kea23 Ovhl	HGK		
PR H0001218 Swing Engine	HGX		
PR H0001247 Wma12 OH	HGX	-	350,000
		-	**350,000**
Disb Gen Diesels			
Disb Gen Unit Overhaul	HGX	-	150,000
		-	**150,000**
Total Overhauls		**4,617,000**	**4,731,000**

CA-SIR-7
DOCKET NO. 05-0315
ATTACHMENT 1
PAGE 4 OF 4
(UPDATED 2/6/07)

CA-SIR-7

Ref: HELCO Response to CA-IR-255 (Unit Overhaul Commitments and Actual Spending).

Please provide the following updated information through December 31, 2006, when available.

a. Updated "Committed Amounts" for the data table on page 3 of the response, broken down by primary vendor in as much detail as readily available.

b. Updated Attachment 2, with column G updated to include 2006 Actual data through December 31.

HELCO Response:

a. Outstanding commitments as of December 31, 2006 are as follows:

Unit Overhaul	Committed Amount as of 12/31/06	Primary Vendor
CT-2 Major Field Inspection	$189,000	SIEMENS DEMAG DELAVAL
CT-4 Hot Section	$10,080	ENDRESS + HAUSER C/O INNOVATIV
Hill 5 Boiler Inspection	$56,820	PETROCHEM INSULATION INC.; HDR ENGINEERING, INC.
Puna Boiler Inspection	$266,853	HAMON CUSTODIS, INC.
Hill 6 Boiler Inspection	$52,321	SWITCHGEAR & POWER SERVICES, LTD.

b. 2006 Actual data through December 31, 2006 is unavailable at this time and will be provided in late January 2007.

CA-SIR-8

Ref: HELCO Response to CA-IR-254 (Production O&M Project Spending by Unit).

Please provide the following updated information through December 31, 2006, when available.

a. Updated Attachment 1, with column G updated to include 2006 Actual data through December 31.

b. Updated Attachment 2, as follows:

   1. Substitute 2006 Actual data in column A through December 31, 2006;

   2. Update the current view of 2007 Budget data (if revised);

   3. Revise any explanations of the variances (A-B);

   4. Provide detailed explanation and itemization of the $950,000 "Materials" estimate for the 2007 CT2 Gen Insp. Item, indicating amounts expected to be capitalized, if any; and

   5. Provide detailed explanation and itemization of the $651,000 "Outside Services" estimate for the 2007 CT2 Gen Insp. Item, indicating amounts expected to be capitalized, if any.

HELCO Response:

a. Updated Attachment 1 of CA-IR-254, with column G updated to include 2006 recorded data through December 31, 2006, is provided as Attachment 1 to this CA-SIR-8 response. The calendar year 2006 expenses are preliminary. Although the Company does not anticipate that these expenses will change, they will not be considered final until the Company issues its financial statements to the Securities and Exchange Commission, currently scheduled for February 28, 2007. Should any of the enclosed amounts change, the Company will provide the revisions as soon as practicable.

b. Updated Attachment 2 of CA-IR-254 is shown in Attachment 2 of CA-SIR-8, as follows:

   1. Substituted 2006 Actual data in column A through December 31, 2006. As noted in the response to part a. above the calendar year 2006 expenses are preliminary and are not considered final until the Company issues its financial statements to the Securities and

Exchange Commission, currently scheduled for February 28, 2007. Should any of the enclosed amounts change, the Company will provide the revisions as soon as practicable.

2. No revision was made to the current view of 2007 Budget data.
3. Revised variance explanations (A-B) for items 3, 4, 7 and 9.
4. The $950,000 "Materials" estimate for the 2007 CT2 Gen Insp. was based on historical costs for similar work and was strictly a budgetary number. Subsequently, in concert with the vendor, the true scope of work was finalized based on unit fired running hours, duty cycle and which components had been changed in the past and which components are reaching the end or past their useable lifetimes. This resulted in the generation of a parts quotation, included as Attachment 3. See Attachment 3 for information on these costs. The information is confidential and is being submitted under Protective Order No. 22593, issued on June 30, 2006. In accordance with the Property Unit Catalogue, nothing from the CT2 Gen Insp. will be capitalized.
5. The $651,000 "Outside Services" estimate for the 2007 CT2 Gen Insp. is based on historical costs for similar work and was strictly a budgetary number. Subsequent to the receipt of the parts quotation for the CT-2 work in 2007, an additional quotation was obtained for outside labor services from the original equipment manufacturer. These outside services are necessary as HELCO does not have the personnel or expertise to disassemble and install the new components, and complete the remaining major field inspection work scope. See Attachment 3 for information on these costs. The information is confidential and is being submitted under Protective Order No. 22593 issued on June 30, 2006. In accordance with the Property Unit Catalogue, nothing from the CT2 Gen Insp. will be capitalized.

Hawaii Electric Light Company Inc.

2006 TEST YEAR
2000 - 2006 O&M History - Projects

Source: Essbase D HG0 Generation, Ellipse on 01/16/07 (REVISED CA-IR-254, ATTACHMENT 1)

		A	B	C	D	E	F	G	H	I	J	K	L	M	N = Sum(A to G) - M
								(1/1/06 to 12/31/06)	YearTotal Unadjusted		Adjusted		2006 Normalized Test Year		
		YearTotal	YearTotal	YearTotal	YearTotal	YearTotal	YearTotal	YearTotal	2006_Budget	(Non-Labor)	2006_Budget	(Non-Labor)	Estimate	Actual 1/1/2000 to 7/31/2006	
Description	RA	2000_Actual	2001_Actual	2002_Actual	2003_Actual	2004_Actual	2005_Actual	2006_Actual	with Oncosts	Adjustments	with Oncosts	Normalizations	with Oncosts	Labor	Non-Labor
Puna Steam Unit															
PR H0000042 PunaOvrhal	HGM	1,106	-	-	-	-	-	247	-	-	-	-	-	-	1,353
PR H0000170 Puna Ohaul	HGM	90,122	865	77	-	428	-	-	-	-	-	-	-	34,699	56,793
PR H0000356 Puna Turb Ovh	HGM	-	421,754	(5,916)	49,403	-	-	-	-	-	-	-	-	133,024	332,217
PR H0000601 P1Turb Ovh '02	HGM	-	-	396,793	-	-	-	-	-	-	-	-	-	67,225	329,568
PR H0000610 P1insp'03	HGM	-	-	-	390,247	169,359	(24,008)	-	-	-	-	-	-	92,830	442,767
PR H0000696 Punainsp04	HGM	-	-	-	-	363,925	28,162	-	-	-	-	-	-	112,086	280,000
PR H0001214 PunaInsp05	HGM	-	-	-	-	-	683,161	14,751	-	-	-	-	-	73,575	624,337
PR H0001220 PunaP&ID	HGT	-	-	-	-	-	21,735	59,344	-	50,000	50,000	(20,000)	30,000	19,290	61,789
PR H0001258 PnaGasDuc	HGM	-	-	-	-	-	17,187	-	-	-	-	-	-	-	17,187
PR H0001259 PnaChemCl	HGM	-	-	-	-	-	-	-	137,000	-	137,000	-	137,000	-	-
PR H0001279 PunaCWP05	HGM	-	-	-	-	-	147,051	(10,201)	-	-	-	-	-	1,120	135,730
PR H0001400 PunaInsp06	HGM	-	-	-	-	-	-	415,487	403,012	-	403,012	-	403,012	1,186	414,301
		91,228	**422,619**	**390,954**	**439,650**	**533,711**	**873,288**	**479,627**	**540,012**	**50,000**	**590,012**	**(20,000)**	**570,012**	**535,035**	**2,696,042**
Shipman 3															
PR H0000034 S3Overhaul	HGM	-	-	-	-	149	-	-	-	-	-	-	-	149	0
PR H0000163 Shp3 Ohaul	HGM	147,208	7,954	-	-	-	-	-	-	-	-	-	-	38,958	116,205
PR H0000602 S3 Insp'02	HGM	-	-	26,666	55,948	-	-	-	-	-	-	-	-	2,909	79,705
PR H0000604 S3 insp 03	HGM	-	-	-	492,086	72,397	-	-	-	-	-	-	-	105,337	459,147
PR H0000688 S3 Turb OH 04	HGM	-	-	-	-	641,972	70,133	-	-	-	-	-	-	130,310	581,795
PR H0001209 S3 Insp 05	HGM	-	-	-	-	-	135,967	3,454	-	-	-	-	-	39,832	99,588
PR H0001224 Ship3 Fuel	HGT	-	-	-	-	-	62,448	-	-	-	-	-	-	-	62,448
PR H0001403 S3 Insp 06	HGM	-	-	-	-	-	-	904,645	286,636	-	286,636	42,000	328,636	-	904,645
		147,208	**7,954**	**26,666**	**548,034**	**714,518**	**268,547**	**908,098**	**286,636**	**-**	**286,636**	**42,000**	**328,636**	**317,494**	**2,303,532**
Shipman 4															
PR H0000035 S4Overhaul	HGM	-	-	-	-	-	-	2,439	-	-	-	-	-	2,439	(0)
PR H0000164 Shp4 Ohaul	HGM	152,609	-	-	-	-	-	-	-	-	-	-	-	38,350	114,260
PR H0000359 S4 BlrInsp	HGM	-	133	-	-	-	-	-	-	-	-	-	-	131	3
PR H0000603 S4 Insp'02	HGM	-	-	4,966	4,368	-	-	-	-	-	-	-	-	1,174	8,160
PR H0000605 S4 Turb OH '03	HGM	-	-	-	664,783	99,435	-	-	-	-	-	-	-	93,383	670,835
PR H0000689 S4 Inst 04	HGM	-	-	-	-	29,443	17,277	-	-	-	-	-	-	1,499	45,220
PR H0001210 S4 Insp 05	HGM	-	-	-	-	-	387,285	-	-	-	-	-	-	76,980	310,305
PR H0001219 Ship WatBo	HGM	-	-	-	-	-	38,058	7,720	-	-	-	-	-	2,765	43,014
PR H0001221 ShipP&ID	HGT	-	-	-	-	-	28,370	40,074	-	100,000	100,000	(46,700)	53,300	10,781	57,664
PR H0001225 ShipPiping	HGM	-	-	-	-	-	55,941	(395)	-	-	-	-	-	2,940	52,607
PR H0001226 ShipTraps	HGM	-	-	-	-	-	28,266	-	-	-	-	-	-	-	28,266
PR H0001404 S4 Insp 06	HGM	-	-	-	-	-	-	722,538	286,636	-	286,636	42,000	328,636	-	722,538
		152,609	**133**	**4,966**	**669,151**	**128,877**	**555,197**	**772,376**	**286,636**	**100,000**	**386,636**	**(4,700)**	**381,936**	**230,440**	**2,052,871**

CA-SIR-8
DOCKET NO. 05-0315
ATTACHMENT 1
PAGE 1 OF 3
(UPDATED 2/6/07)

Hawaii Electric Light Company Inc.

2006 TEST YEAR
2000 - 2006 O&M History - Projects

Source: Essbase D HG0 Generation, Ellipse on 01/16/07

Description	RA	A YearTotal 2000_Actual	B YearTotal 2001_Actual	C YearTotal 2002_Actual	D YearTotal 2003_Actual	E YearTotal 2004_Actual	F YearTotal 2005_Actual	G (1/1/06 to 12/31/06) YearTotal 2006_Actual	H YearTotal Unadjusted 2006_Budget with Oncosts	I (Non-Labor) Adjustments	J Adjusted 2006_Budget with Oncosts	K (Non-Labor) Normalizations	L 2006 Normalized Test Year Estimate with Oncosts	M Actual 1/1/2000 to 7/31/2006 Labor	N = Sum(A to G) - M Non-Labor
Hill 5															
PR H0000036 H5Overhaul	HGM	1,373	-	-	-	-	-	-	-	-	-	-	-	-	1,373
PR H0000165 H5 Ohaul	HGM	233,372	402	-	-	-	-	-	-	-	-	-	-	75,326	158,448
PR H0000360 H5Ovhl2001	HGM	-	152,659	1,155	-	-	-	-	-	-	-	-	-	64,127	89,686
PR H0000597 H5 Turb OH '02	HGM	-	-	831,962	4,868	-	-	-	-	-	-	-	-	173,898	662,932
PR H0000606 H5 Insp '03	HGM	-	-	7,074	613,223	38,140	-	-	-	-	-	-	-	111,522	546,914
PR H0000690 H5 Insp 04	HGM	-	-	-	-	201,820	11,089	-	-	-	-	-	-	44,243	168,665
PR H0001211 H5 Insp 05	HGM	-	-	-	-	-	437,224	24,372	-	-	-	-	-	102,270	359,327
PR H0001399 H5 Insp 06	HGM	-	-	-	-	-	-	341,632	471,445	-	471,445	-	471,445	68,429	273,203
PR H0001440 HillP&ID	HGT	-	-	-	-	-	-	105	-	150,000	150,000	(66,300)	83,700	105	0
		234,745	**153,061**	**840,191**	**618,091**	**239,960**	**448,313**	**366,109**	**471,445**	**150,000**	**621,445**	**(66,300)**	**555,145**	**639,922**	**2,260,549**
Hill 6															
PR H0000038 H6 Ohaul	HGM	-	-	-	-	-	-	940	-	-	-	-	-	940	-
PR H0000166 H6 Ohaul	HGM	412,796	4,870	-	8,859	-	-	-	-	-	-	-	-	108,906	317,620
PR H0000362 H6 BlrInsp	HGM	-	130,636	-	-	-	-	-	-	-	-	-	-	45,029	85,607
PR H0000598 H6insp'02	HGM	-	-	477,134	3,614	-	-	-	-	-	-	-	-	142,352	338,397
PR H0000608 H6 Turb OH '03	HGM	-	-	2,735	820,779	156,398	-	-	-	-	-	-	-	120,887	859,024
PR H0000692 H6 Insp 04	HGM	-	-	-	-	334,745	45,491	-	-	-	-	-	-	71,603	308,634
PR H0001212 H6 Insp 05	HGM	-	-	-	-	-	325,343	194	-	-	-	-	-	68,396	257,141
PR H0001387 Hydro Dry	HGM	-	-	-	-	-	-	151,907	-	100,000	100,000	-	100,000	11,054	140,853
PR H0001392 VFD Upgrades	HGM	-	-	-	-	-	-	-	-	150,000	150,000	-	150,000	-	-
PR H0001402 H6 Insp 06	HGM	-	-	-	-	-	-	878,355	767,326	-	767,326	230,000	997,326	95,540	782,814
		412,796	**135,506**	**479,869**	**833,253**	**491,143**	**370,834**	**1,031,396**	**767,326**	**250,000**	**1,017,326**	**230,000**	**1,247,326**	**664,708**	**3,090,090**
CT-1															
PR H0000167 CT1 Insp	HGM	16,456	-	-	-	-	-	-	-	-	-	-	-	7,122	9,334
PR H0000355 CT1GenInsp	HGM	-	59	-	-	-	-	-	-	-	-	-	-	59	0
PR H0000671 CT1 rewind	HGX	-	-	351,124	111,607	4,144	-	-	-	-	-	-	-	31,266	435,608
PR H0001216 CT1 Insp05	HGX	-	-	-	-	-	131,280	-	-	-	-	-	-	34,373	96,907
PR H0001396 CT1 Insp06	HGX	-	-	-	-	-	-	58,244	57,339	-	57,339	-	57,339	31	58,213
PR H0001158 CT1 Nozzles	HGX	-	-	-	-	-	-	-	-	267,600	267,600	-	267,600	-	-
		16,456	**59**	**351,124**	**111,607**	**4,144**	**131,280**	**58,244**	**57,339**	**267,600**	**324,939**	**-**	**324,939**	**72,850**	**600,063**
CT-2															
PR H0000041 CT2Ovrhaul	HGM	13,273	-	-	-	-	-	-	-	-	-	-	-	-	13,273
PR H0000168 CT2 Insp	HGM	100,618	21,973	9,453	-	-	-	-	-	-	-	-	-	30,159	101,884
PR H0000138 CT2Noise	HGM	691	936	-	-	-	-	-	-	-	-	-	-	1,627	0
PR H0000271 CT2 LCF	HGM	-	1,791,322	(155,847)	-	-	-	-	-	-	-	-	-	93,259	1,542,215
PR H0000600 CT2Insp'02	HGM	-	-	2,300	5,635	-	-	-	-	-	-	-	-	418	7,517
PR H0000609 CT2insp'03	HGM	-	-	-	123,737	-	-	-	-	-	-	-	-	29,461	94,276
PR H0000695 CT2 Insp04	HGK	-	-	-	-	159,755	-	-	-	-	-	-	-	12,993	146,761
PR H0001215 CT2 Insp05	HGK	-	-	-	-	-	1,090,863	433,254	-	-	-	-	-	51,451	1,472,667
PR H0001388 WT HMI Repl	HGK	-	-	-	-	-	-	-	-	25,000	25,000	-	25,000	-	-
PR H0001397 CT2 MFI06	HGK	-	-	-	-	-	-	555,686	2,146,227	(700,000)	1,446,227	(700,000)	746,227	6,459	549,227
		114,583	**1,814,230**	**(144,095)**	**129,371**	**159,755**	**1,090,863**	**988,941**	**2,146,227**	**(675,000)**	**1,471,227**	**(700,000)**	**771,227**	**225,828**	**3,927,820**

Hawaii Electric Light Company Inc.

2006 TEST YEAR
2000 - 2006 O&M History - Projects

Source: Essbase D HG0 Generation, Ellipse on 01/16/07

Description	RA	A YearTotal 2000_Actual	B YearTotal 2001_Actual	C YearTotal 2002_Actual	D YearTotal 2003_Actual	E YearTotal 2004_Actual	F YearTotal 2005_Actual	G (1/1/06 to 12/31/06) YearTotal 2006_Actual	H YearTotal Unadjusted 2006_Budget with Oncosts	I (Non-Labor) Adjustments	J Adjusted 2006_Budget with Oncosts	K (Non-Labor) Normalizations	L 2006 Normalized Test Year Estimate with Oncosts	M Actual 1/1/2000 to 7/31/2006 Labor	N = Sum(A to G) - M Non-Labor
CT-3															
PR H0000169 CT3 Insp	HGM	248,800	42	-	538	-	-	-	-	-	-	-	-	30,159	219,221
PR H0000037 CT3Ovrhaul	HGM	1,526	-	-	-	-	-	-	-	-	-	-	-	1,526	(0)
PR H0000599 CT3 HS '02	HGM	-	-	670	-	-	-	-	-	-	-	-	-	670	0
PR H0000607 CT3insp'03	HGM	-	-	556	46,928	1,190	-	-	-	-	-	-	-	13,965	34,709
PR H0000611 CT3 Stack	HGT	-	-	-	217,791	180,364	-	-	-	-	-	-	-	2,415	395,740
PR H0000691 CT3 Insp04	HGX	-	-	-	-	8,897	43,055	-	-	-	-	-	-	-	51,952
PR H0001129 CT3 Repr04	HGX	-	-	-	-	379,573	9,991	-	-	-	-	-	-	16,889	372,674
PR H0001213 CT3 Insp05	HGX	-	-	-	-	-	163,095	55,426	-	-	-	-	-	28,445	190,077
PR H0001395 CT3 Insp06	HGX	-	-	-	-	-	-	73,859	73,524	-	73,524	-	73,524	618	73,241
PR CT3 LP Turbine Upgrade	HGX	-	-	-	-	-	-	-	-	-	-	65,000	65,000	-	-
		250,325	**42**	**1,226**	**265,257**	**570,024**	**216,141**	**129,285**	**73,524**	**-**	**73,524**	**65,000**	**138,524**	**94,688**	**1,337,613**
CT-4															
PR H0000039 CT4Ovrhaul	HGM	-	-	-	-	-	159,532	-	-	-	-	-	-	12,451	147,081
PR H0001398 CT4 Gen06	HGK	-	-	-	-	-	-	991,106	63,232	845,000	908,232	-	908,232	3,948	987,157
PR H0001405 CT4 LP06	HGK	-	-	-	-	-	-	-	50,000	(50,000)	-	65,000	65,000	-	-
		-	-	-	-	-	**159,532**	**991,106**	**113,232**	**795,000**	**908,232**	**65,000**	**973,232**	**16,399**	**1,134,238**
CT-5															
PR H0000040 CT5Ovrhaul	HGM	-	-	-	-	-	21,050	-	-	-	-	-	-	1,922	19,128
PR H0001401 CT5 Hot06	HGK	-	-	-	-	-	-	27,701	1,505,720	(1,405,000)	100,720	-	100,720	7,342	20,359
PR H0001406 CT5 LP06	HGK	-	-	-	-	-	-	-	50,000	(50,000)	-	65,000	65,000	-	-
		-	-	-	-	-	**21,050**	**27,701**	**1,555,720**	**(1,455,000)**	**100,720**	**65,000**	**165,720**	**9,264**	**39,487**
Diesels															
PR H0000357 Kea D21 OH	HGM	-	141,188	133,438	-	-	-	-	-	-	-	-	-	43,635	230,991
PR H0000670 Kan15 OH	HGX	-	-	228,752	67,301	-	-	-	-	-	-	-	-	32,287	263,765
PR H0000697 Kan16 OH	HGX	-	-	-	350,781	13,432	-	-	-	-	-	-	-	68,139	296,074
PR H0000699 Wma f.tank	HGT	-	-	-	-	-	-	-	30,000	-	30,000	(20,000)	10,000	514	(514)
PR H0000775 Wma13 OH	HGX	-	-	192,852	124,976	-	-	-	-	-	-	-	-	33,795	284,033
PR H0000778 Kea22 Ovhl	HGK	-	-	0	337,487	-	-	-	-	-	-	-	-	41,870	295,617
PR H0001005 Wma14 Ovhl	HGX	-	-	-	-	219,421	55,002	-	-	-	-	-	-	46,126	228,297
PR H0001110 Kea23 Ovhl	HGK	-	-	-	-	77,780	216,591	-	-	-	-	-	-	62,741	231,630
PR H0001218 Swing Engine	HGX	-	-	-	-	-	184,250	48,397	-	-	-	350,000	350,000	28,583	204,064
PR H0001247 Wma12 OH	HGX	-	-	-	-	-	372,751	4	-	-	-	-	-	74,101	298,654
		-	**141,188**	**555,041**	**880,546**	**310,633**	**828,594**	**48,401**	**30,000**	**-**	**30,000**	**330,000**	**360,000**	**431,792**	**2,332,611**
Disb Gen Diesels															
Disb Gen Unit Overhaul	HGX	-	-	-	-	-	-	-	-	-	-	150,000	150,000	-	-
		-	-	-	-	-	-	-	-	-	-	**150,000**	**150,000**	-	-
Hydros															
PR H0001467 PuueoPen	HGT	-	-	-	-	-	-	119,873	-	200,000	200,000	-	200,000	1,152	118,721
PR H0001468 WaiauPen	HGT	-	-	-	-	-	-	1,326	-	150,000	150,000	-	150,000	768	558
PR H0001505 Waiau Brid	HGT	-	-	-	-	-	-	70,825	50,000	-	50,000	-	50,000	-	70,825
PR H0001506 Runnr Insp	HGT	-	-	-	-	-	-	26,041	10,000	-	10,000	-	10,000	1,501	24,539
PR H0001507 Wai Intake	HGT	-	-	-	-	-	-	1,102,703	50,000	-	50,000	-	50,000	224	1,102,480
		-	-	-	-	-	-	**1,320,768**	**110,000**	**350,000**	**460,000**	-	**460,000**	**3,644**	**1,317,124**
Admin Building and Other															
PR H0000173 Struct Imp	HGM	677	-	-	-	-	-	-	-	-	-	-	-	-	677
PR H0000698 Pred Maint	HGA	-	-	-	1,455	9,584	9,759	-	62,500	18,000	80,500	-	80,500	-	20,798
		677	-	-	**1,455**	**9,584**	**9,759**	-	**62,500**	**18,000**	**80,500**	-	**80,500**	-	**21,475**
Total O&M Projects		**1,420,627**	**2,674,794**	**2,505,943**	**4,496,415**	**3,162,349**	**4,973,399**	**7,122,053**	**6,500,597**	**(149,400)**	**6,351,197**	**156,000**	**6,507,197**	**3,242,064**	**23,113,516**

Hawaii Electric Light Company, Inc.

2006 TEST YEAR
2006 - 2007 Overhaul Costs

(REVISED CA-IR-254, ATTACHMENT 2)

Project#	Description	Expense Element	(A) 2006 Actuals thru December	2007 Budget (no update to costs)	(B) 2006 Adjusted Budget (WP-510 page 8)	(A)-(B) Variance		(C) Adjusted 2006 Budget with oncosts
H0001218	Dsl Swing Engine - 2006 - 2005	Labor	23,152	-				
		Materials	10,658	-				
		Overhead	14,586	-				
H0001218 Total			48,397	-	-	48,397	(1)	-
H0001395	CT3 General Inspection 2006	Labor	13,120	-				
		Materials	15,317	-				
		Overhead	7,490	-				
		Outside Services	37,932	-				
H0001395 Total			73,859	-	58,000	15,859	(2)	73,524
H0001396	CT1 Gen Insp 2006	Labor	27,222	-				
		Materials	11,826	-				
		Overhead	15,025	-				
		Outside Services	4,171	-				
H0001396 Total			58,244	-	43,000	15,244	(3)	57,339
H0001397	CT2 Major Field Insp 2006	Labor	49,653	-				
	(Includes costs from H0001215 which	Materials	904,554	-				
	should have been charged to H0001397.)	Overhead	23,733	-				
		Outside Services	11,000	-				
H0001397 Total			988,941	-	2,000,000	(1,011,059)	(4)	1,446,227
H0001398	CT4 Hot Section 2006	Labor	4,233	-				
		Materials	914,421	-				
		Overhead	2,282	-				
		Outside Services	70,170	-				
H0001398 Total			991,106	-	844,000	147,106	(5)	908,232
H0001399	Hill 5 Blr Insp 2006	Labor	70,966	-				
		Materials	100,996	-				
		Overhead	37,062	-				
		Outside Services	132,608	-				
H0001399 Total			341,632	-	413,000	(71,368)	(6)	471,445
H0001400	Puna Blr Insp 2006	Labor	95,456	-				
		Materials	41,357	-				
		Overhead	38,861	-				
		Outside Services	239,814	-				
H0001400 Total			415,487	-	334,000	81,487	(7)	403,012
H0001401	CT5 Gen Inspection 2006	Labor	7,859	-				
		Materials	15,703	-				
		Overhead	4,140	-				
H0001401 Total			27,701	-	55,000	(27,299)	(8)	100,720
H0001402	Hill 6 Blr Insp 2006	Labor	150,539	-				
		Materials	146,998	-				
		Overhead	80,055	-				
		Outside Services	500,762	-				
H0001402 Total			878,355	-	412,000	466,355	(9)	767,326
H0001403	Shp 3 Blr Insp - 2006	Labor	130,199	-				
		Materials	185,753	-				
		Overhead	68,799	-				
		Outside Services	519,893	-				
H0001403 Total			904,645	-	229,000	675,645	(10	286,636
H0001404	Shp 4 Blr Insp - 2006	Labor	95,748	-				
		Materials	75,367	-				
		Overhead	48,952	-				
		Outside Services	502,471	-				
H0001404 Total			722,538	-	229,000	493,538	(11	286,636
KKlein01	Puna Blr Insp-Turb Major 2007	Labor	-	89,472				
		Materials	-	163,500				
		Outside Services	-	288,654				
KKlein01 Total			-	541,626				
KKlein02	S3 Blr Insp 2007	Labor	-	89,472				
		Materials	-	176,500				
		Outside Services	-	79,654				
KKlein02 Total			-	345,626				
KKlein03	S4 Blr Insp 2007	Labor	-	89,472				
		Materials	-	176,500				
		Outside Services	-	79,654				

Hawaii Electric Light Company, Inc.

2006 TEST YEAR
2006 - 2007 Overhaul Costs

(REVISED CA-IR-254, ATTACHMENT 2)

Project#	Description	Expense Element	(A) 2006 Actuals thru December	2007 Budget (no update to costs)	(B) 2006 Adjusted Budget (WP-510 page 8)	(A)-(B) Variance	(C) Adjusted 2006 Budget with oncosts
KKlein03 Total			-	345,626			
KKlein04	H5 Blr Insp 2007	Labor	-	94,442			
		Materials	-	115,500			
		Outside Services	-	168,154			
KKlein04 Total			-	378,096			
KKlein05	H6 Blr Insp 2007	Labor	-	94,442			
		Materials	-	115,500			
		Outside Services	-	168,154			
KKlein05 Total			-	378,096			
KKlein06	CT1 Gen Insp 2007	Labor	-	22,040			
		Materials	-	15,000			
		Outside Services	-	8,000			
KKlein06 Total			-	45,040			
KKlein07	CT2 Gen Insp 2007	Labor	-	25,897			
		Materials	-	950,000			
		Outside Services	-	651,000			
KKlein07 Total			-	1,626,897			
KKlein08	CT3 Hot Section 2007	Labor	-	22,040			
		Materials	-	322,000			
		Outside Services	-	556,499			
KKlein08 Total			-	900,539			
KKlein09	CT5 Gen Insp 2007	Labor	-	25,897			
		Materials	-	22,000			
		Outside Services	-	8,000			
KKlein09 Total			-	55,897			
KKlein10	CT4 Gen Insp 2007	Labor	-	25,897			
		Materials	-	22,000			
		Outside Services	-	8,000			
KKlein10 Total			-	55,897			
Grand Total			$ 5,450,904	$ 4,673,338	$ 4,617,000	$ 833,904	$ 4,801,097

Explanations for Variance column:

(1) Diesel swing engine overhaul started in late 2005, and was unbudgeted in 2006. Costs for 2006 were unknown at budget preparation time.

(2) CT-3 additional costs incurred for structural maintenance and painting.

(3) CT-1 additional costs incurred for structural maintenance and painting.

(4) CT-2 material costs were moved from 2006 to 2007 due to the long lead time (i.e., 28 weeks, order acceptance to delivery).

(5) CT-4 Hot Section actual contractor costs were higher than originally budgeted.

(6) Hill 5 variance is due to downgrade in scope and shorter timing allowed.

(7) Puna overhaul incurred additional costs for stack repair work.

(8) CT-5 was overbudgeted. This was only the second inspection since commissioning.

(9) Hill 6 was underbudgeted. The overhaul was done with a major scope of work, including penthouse repairs.

(10) Shipman 3 variance is due to the non-budgeting of asbestos abatement ("ACM") work being done to prepare for boiler tube replacement.

(11) Shipman 4 variance is due to the non-budgeting of asbestos abatement ("ACM") work being done to prepare for boiler tube replacement.

Confidential Information Deleted
Pursuant to Protective Order No. 22593.

This page intentionally left blank.

CA-SIR-8

Ref: HELCO Response to CA-IR-254 (Production O&M Project Spending by Unit).

Please provide the following updated information through December 31, 2006, when available.

a. Updated Attachment 1, with column G updated to include 2006 Actual data through December 31.

b. Updated Attachment 2, as follows:

   1. Substitute 2006 Actual data in column A through December 31, 2006;

   2. Update the current view of 2007 Budget data (if revised);

   3. Revise any explanations of the variances (A-B);

   4. Provide detailed explanation and itemization of the $950,000 "Materials" estimate for the 2007 CT2 Gen Insp. Item, indicating amounts expected to be capitalized, if any; and

   5. Provide detailed explanation and itemization of the $651,000 "Outside Services" estimate for the 2007 CT2 Gen Insp. Item, indicating amounts expected to be capitalized, if any.

HELCO Response:

a. 2006 Actual data through December 31, 2006 is not available at this time and will be provided in late January 2007.

b. 2006 Actual data through December 31, 2006 is not available at this time and will be provided in January 2007.

CA-SIR-9

Ref: HELCO Response to CA-IR-342 (Reclassified Project Costs).

The Company's inclusion of the reclassified projects as part of normal ongoing non-labor expense appears to not be justified by the responses provided. Please explain the following.

a. Given the responses to parts b and c that the only comparable historical expenditures are for SCADA upgrades totaling $96,516 in 2005, how can rate case inclusion of annual expenses of $543,000 be viewed as reasonable and representative of ongoing cost levels?

b. Given the responses to CA-IR-342, parts d and e that "future estimated expense charges have not been determined and are not currently budgeted," how can annual expenses of $543,000 be viewed as reasonable and representative of ongoing cost levels?

c. Provide complete copies of all reports, analyses, projections, calculations, workpapers and other documents associated with the responses to parts a and b of this information request.

HELCO Response:

a. The amount of the budget adjustment is $393,000, not $543,000. As stated in the response to CA-IR-342, the Hill 6 Boiler VFD Upgrades project was moved from 2006 to 2007, and $150,000 for this project will be removed from the Test Year 2006 estimates. No further adjustment is necessary or appropriate. The three remaining projects that were transferred from capital to expense are not extraordinary in terms of cost or scope. Production O&M expenses include numerous projects, as has been demonstrated in other responses. Many of the projects will vary from year to year, as different components of generating units and ancillary systems are replaced and/or upgraded. These projects should not be singled out simply because they were reclassified from capital to expense.

In addition, although the responses to parts b. and c. indicated that the only comparable historical expenditures are for SCADA upgrades totaling $96,516 in 2005, the Production department has historically incurred O&M expenses for projects that were originally

thought to be capital. In 2004, Shipman Switchgear Repairs ($334,998) and Shipman Restroom Renovation ($69,315) projects are comparable. In 2005, the Puna Boiler Retubing ($433,338), Puna Stack Lighting ($28,247) and SCADA Platform Upgrade ($101,019) projects are also comparable. The Hill 6 Boiler VFD Upgrade project is now scheduled for 2007.

Finally, HELCO has made a number of normalization adjustments to the 2006 adjusted budget (as reflected in HELCO T-5 and as summarized in the response to CA-IR-447) to make the total costs reasonably representative of normal, on-going Production O&M expenses, given HELCO's existing generating units, and the manner in which they were operated in 2006 and are expected to be operated in the next several years.

b. At the time when the response to CA-IR-342 was submitted, parts d. and e. were correct in stating that "future estimated expense charges have not been determined and are not currently budgeted." Currently, for 2007, the Production department has knowledge that it will incur (although not budgeted) projects such as the Hill Boiler Retubing (approximately $600,000) and Waiau intake canal repair work (approximately $400,000), or as well as the Hill 6 Boiler VFD Upgrades project identified in the response. Annual expenses of $393,000 can be viewed as reasonable and representative of ongoing cost levels.

c. Not applicable.

CA-SIR-10

Ref: HELCO Response to CA-IR-336, page 3 (Production EE 201 Miscellaneous Materials).

Please provide the following updated information through December 31, 2006, when available.

a. Actual per books EE 201 expenditures by RA through December 31, 2006, to replace the data table provided through October when data is available.

b. Identify, describe and quantify any known abnormal, non-recurring or otherwise not representative transactions within your response to part a of this information request.

c. Update the CA-IR-2 T-5, Attachment 2A, pages 9-21 spreadsheet of actual annual historical EE 201 spending, adding a column with calendar year 2006 actual data to the amounts already shown for the years 1999 through 2005, when data is available.

HELCO Response:

a. Actual per books EE 201 expenditures by RA through December 31, 2006, to replace the data table provided in CA-IR-336 through October is shown below. The calendar year 2006 expenses are preliminary. Although the Company does not anticipate that these expenses will change, they will not be considered final until the Company issues its financial statements to the Securities and Exchange Commission, currently scheduled for February 28, 2007. Should any of the enclosed amounts change, the Company will provide the revisions as soon as practicable.

HGA Admin-G	$ 1,450
HGC Keahole Op	68,710
HGH Hill Opr-G	268,512
HGK Keah Maint	307,023
HGM Steam&Hydr	277,022
HGP Puna Oper	238,297
HGT Technical	9,471
HGW Waiakea Op	76,068
HGX CT&Diesel	628,537
	$1,875,090

b. Part (a) of this information request, as shown in detail on Attachment 1, contains a non-recurring transaction on page 9: HGX 271 A01 $328,794. This cost is related to CT-1 Low Smoke Fuel Nozzles, which was originally thought a capital project. This item is not a property unit, and was thus charged to O&M. The ten fuel injection nozzles, combustor cans and associated hardware for CT-1 were replaced as an effort to reduce the opacity of the unit's exhaust plume while operating in order to maintain compliance with its operating permit. It is normal to incur some expenses that would appear to be non-recurring when looked in isolation. In this case, HELCO does not expect to have to replace the CT-1 fuel injection nozzles, combustion cans and associated hardware again. In general, however, it is considered normal and recurring maintenance or repair work for HELCO to replace components on generating units.

c. In the CA-IR-2 T-5, Attachment 2A, pages 9-21 spreadsheet of actual annual historical EE 201 spending, the amounts already shown are for the years 1999 through 2004. Attachment 1 of this SIR shows actual annual EE 201 spending for years 2001 through 2006. The reporting program is unable to include the years 2000 and 1999 in the same file due to technical limitations of the program.

The calendar year 2006 expenses are preliminary. Although the Company does not anticipate that these expenses will change, they will not be considered final until the Company issues its financial statements to the Securities and Exchange Commission, currently scheduled for February 28, 2007. Should any of the enclosed amounts change, the Company will provide the revisions as soon as practicable.

Source: Pillar Control file dtd 01/29/07

RA	Act Loc	Ind	Proj	EE	Activity	FY06 Actual	FY05 Actual	FY04 Actual	FY03 Actual	FY02 Actual	FY01 Actual
HGA	122 HEL	NS	NHGZZZZ	201	Evaluate & Negotiate New Contract	0	0	0	0	218.71	0
HGA	211 ANS	NE	NHGZZZZ	201	Engr, Design & Manage Projects	0	0	0	0	440.52	0
HGA	240 ANS	NE	NHGZZZZ	201	Develop & Maintain Policies & Proc	1,199.92	4,472.62	2,121.97	962.31	66.69	1,086.21
HGA	242 P01	NE	NHGZZZZ	201	Op & Mon Plt Eq (Make Rounds)-B	0	0	0	0	0	24.73
HGA	242 RST	NS	NHGZZZZ	201	Op & Mon Plt Eq (Make Rounds)-B	77.85	227.06	584.57	70.29	0	0
HGA	244 A01	NE	NHGZZZZ	201	Op & Mon Plt Eq (Make Rounds)-N	0	484.95	0	831.01	0	0
HGA	244 BNS	NE	NHGZZZZ	201	Op & Mon Plt Eq (Make Rounds)-N	0	1,918.86	0	0	0	0
HGA	245 RST	NE	NHGZZZZ	201	Mon Plt/Oprnl Performance-Boiler I	0	0	0	0	1,674.97	0
HGA	245 RST	NS	NHGZZZZ	201	Mon Plt/Oprnl Performance-Boiler I	0	0	(4.00)	0	0	0
HGA	259 R06	NE	NHGZZZZ	201	Maint Boiler Plt & Rel Eq-Corr	0	0	0	0	(12,916.80)	0
HGA	375 AOC	NE	NHGZZZZ	201	Schedule Generation Resources	0	1,173.03	0	0	5,234.03	0
HGA	376 HAH	NE	NHGZZZZ	201	Dispatch & Mon Gen/Trans SCADA	0	0	0	0.00	7,783.72	0
HGA	376 HAH	NS	NHGZZZZ	201	Dispatch & Mon Gen/Trans SCADA	(26.84)	24,458.77	0	0	0	0
HGA	700 HPM	NS	NHGZZZZ	201	Develop & Administer Business Pla	0	29.75	0	0	0	0
HGA	700 HPO	NS	NHGZZZZ	201	Develop & Administer Business Pla	0	0	0	0	0	15.00
HGA	745 HPO	NS	NHGZZZZ	201	Maintain Rel w/Legis & Govt Agenc	198.92	0	0	0	0	0
HGA	789 HPO	NS	NHGZZZZ	201	Attend Training	0	40.48	116.20	0	0	0
HGA	875 RST	NE	NHGZZZZ	201	Comply Ongoing Permit/Reg Reqs-	0	0	0	0	624.81	0
HGA	875 RST	NS	NHGZZZZ	201	Comply Ongoing Permit/Reg Reqs-	0	0	0	0	0	356.00
HGA	876 RST	NE	NHGZZZZ	201	Comply Ongoing-Wastewater	0	0	0	0	961.87	119.81
HGA	877 RST	NE	NHGZZZZ	201	Comply Ongoing-Solid & Haz Wast	0	0	0	897.25	0	188.95
HGA	877 RST	NS	NHGZZZZ	201	Comply Ongoing-Solid & Haz Wast	0	0	0	0	0	373.35
HGA	878 RST	NE	NHGZZZZ	201	Comply Ongoing-Solid & Haz Wast	0	0	170.73	0	1,170.94	0
HGA	931 ANS	NE	NHGZZZZ	201	Care for Buildings & Grounds	0	0	0	0	156.20	81.24
HGA				201		1,449.85	32,805.52	2,989.47	2,760.86	5,415.66	2,245.29
HGC	244 C02	NE	NHGZZZZ	201	Op & Mon Plt Eq (Make Rounds)-N	2,653.92	1,934.03	0	0	0	613.98
HGC	244 C04	NE	NHGZZZZ	201	Op & Mon Plt Eq (Make Rounds)-N	18,257.93	58,448.94	7,088.19	0	0	0
HGC	244 C05	NE	NHGZZZZ	201	Op & Mon Plt Eq (Make Rounds)-N	18,257.89	54,562.70	5,928.17	0	0	0
HGC	244 C18	NE	NHGZZZZ	201	Op & Mon Plt Eq (Make Rounds)-N	0	0	0	0	0	271.65
HGC	244 C19	NE	NHGZZZZ	201	Op & Mon Plt Eq (Make Rounds)-N	0	0	0	0	0	271.65
HGC	244 C20	NE	NHGZZZZ	201	Op & Mon Plt Eq (Make Rounds)-N	0	0	0	0	0	288.63
HGC	244 C21	NE	NHGZZZZ	201	Op & Mon Plt Eq (Make Rounds)-N	0	515.66	920.18	0	0	288.63
HGC	244 C22	NE	NHGZZZZ	201	Op & Mon Plt Eq (Make Rounds)-N	0	0	0	0	0	288.63
HGC	244 C23	NE	NHGZZZZ	201	Op & Mon Plt Eq (Make Rounds)-N	0	830.34	0	0	0	288.63
HGC	244 CNS	NE	NHGZZZZ	201	Op & Mon Plt Eq (Make Rounds)-N	2,357.07	3,319.37	2,402.66	83.83	3,399.51	0
HGC	248 C04	NE	NHGZZZZ	201	Perf Water Treatment & Analysis(P	6,044.83	20,868.79	3,166.01	0	0	0
HGC	248 C05	NE	NHGZZZZ	201	Perf Water Treatment & Analysis(P	6,044.79	19,965.69	3,166.00	0	0	0
HGC	265 CWT	NE	NHGZZZZ	201	Maint Stn Common Struct & Sys-C	15,093.39	0	0	0	0	0
HGC	875 CNS	NE	NHGZZZZ	201	Comply Ongoing Permit/Reg Reqs-	0	95.82	3,501.78	0	0	0
HGC	877 CNS	NE	NHGZZZZ	201	Comply Ongoing-Solid & Haz Wast	0	563.56	0	0	0	0
HGC	877 CNS	NS	NHGZZZZ	201	Comply Ongoing-Solid & Haz Wast	0	988.61	0	0	0	0

CA-SIR-10
DOCKET NO. 05-0315
ATTACHMENT 1
PAGE 1 OF 11
(UPDATED 2/9/07)

Source: Pillar Control file dtd 01/29/07

RA	Act Loc	Ind	Proj	EE	Activity	FY06 Actual	FY05 Actual	FY04 Actual	FY03 Actual	FY02 Actual	FY01 Actual
HGC	931 CNS	NE	NHGZZZZ	201	Care for Buildings & Grounds	0	333.27	0	0	0	0
HGC				201		68,709.82	162,426.78	26,172.99	83.83	3,399.51	2,311.80
HGH	220 R06	NE	NHGZZZZ	201	Manage Fuel Supply Procurement	0	(7,217.30)	207.26	0	0	0
HGH	220 RST	NE	NHGZZZZ	201	Manage Fuel Supply Procurement	0	0	15,616.97	0	0	0
HGH	222 RST	NS	NHGZZZZ	201	Mnge Procurmt of Fuel Trnspt & Di	0	0	0	2,729.79	0	0
HGH	230 ANS	NE	NHGZZZZ	201	Mnge O&M Fuel Facil	0	0	360.35	0	0	0
HGH	230 RST	NE	NHGZZZZ	201	Mnge O&M Fuel Facil	1,546.13	5,712.50	361.57	0	0	0
HGH	241 RST	NE	NHGZZZZ	201	Operate & Monitor Fuel Feed Syste	0	0	0	3,608.61	0	0
HGH	242 R05	NE	NHGZZZZ	201	Op & Mon Plt Eq (Make Rounds)-B	11,461.51	10,650.91	5,959.46	10,257.63	32,306.27	14,989.07
HGH	242 R06	NE	NHGZZZZ	201	Op & Mon Plt Eq (Make Rounds)-B	18,977.22	22,593.16	10,363.28	17,786.34	37,135.76	27,910.19
HGH	242 RST	NE	NHGZZZZ	201	Op & Mon Plt Eq (Make Rounds)-B	3,068.17	1,990.83	1,327.19	5,552.30	4,048.94	2,875.13
HGH	242 S03	NE	NHGZZZZ	201	Op & Mon Plt Eq (Make Rounds)-B	0	0	0	0	38.06	27.53
HGH	242 S04	NE	NHGZZZZ	201	Op & Mon Plt Eq (Make Rounds)-B	0	0	0	0	38.02	27.52
HGH	242 SST	NE	NHGZZZZ	201	Op & Mon Plt Eq (Make Rounds)-B	0	0	0	0	142.90	0
HGH	244 A01	NE	NHGZZZZ	201	Op & Mon Plt Eq (Make Rounds)-N	0	0	71.19	0	0	808.86
HGH	244 ANS	NE	NHGZZZZ	201	Op & Mon Plt Eq (Make Rounds)-N	3,467.15	9,214.27	5,497.63	13,049.98	19,780.70	17,738.81
HGH	245 R05	NE	NHGZZZZ	201	Mon Plt/Oprnl Performance-Boiler F	0	0	0	0	0	75.24
HGH	245 R06	NE	NHGZZZZ	201	Mon Plt/Oprnl Performance-Boiler F	0	0	0	0	0	36.01
HGH	245 RST	NE	NHGZZZZ	201	Mon Plt/Oprnl Performance-Boiler F	0	0	0	281.08	0	0
HGH	246 R06	NE	NHGZZZZ	201	Mon Plt/Oprnl Performance-TurboG	0	0	0	0	0	75.21
HGH	248 R05	NE	NHGZZZZ	201	Perf Water Treatment & Analysis(P	45,883.38	49,879.97	37,528.67	22,351.20	31,756.43	23,346.09
HGH	248 R06	NE	NHGZZZZ	201	Perf Water Treatment & Analysis(P	51,147.74	49,027.77	32,252.33	23,012.55	32,353.57	24,185.13
HGH	248 RST	NE	NHGZZZZ	201	Perf Water Treatment & Analysis(P	3,103.49	0	3,959.41	0	1,775.14	16,351.45
HGH	259 R05	NE	NHGZZZZ	201	Maint Boiler Plt & Rel Eq-Corr	9,387.44	33,528.82	10,149.57	3,741.17	0	10,643.31
HGH	259 R06	NE	NHGZZZZ	201	Maint Boiler Plt & Rel Eq-Corr	34,936.92	13,362.75	8,976.92	4,718.58	0	4,393.13
HGH	262 R05	NE	NHGZZZZ	201	Maint Steam TurboGen & Rel Eq-C	0	2,589.00	2.89	0	0	(97.57)
HGH	262 R06	NE	NHGZZZZ	201	Maint Steam TurboGen & Rel Eq-C	0	0	1,868.22	0	0	0
HGH	265 ANS	NE	NHGZZZZ	201	Maint Stn Common Struct & Sys-C	884.39	0	0	0	(36.86)	1,347.93
HGH	265 RST	NE	NHGZZZZ	201	Maint Stn Common Struct & Sys-C	45,220.02	14,829.10	23,888.84	0	0	0
HGH	265 RTF	NE	NHGZZZZ	201	Maint Stn Common Struct & Sys-C	15,696.44	0	0	0	0	0
HGH	265 RW1	NE	NHGZZZZ	201	Maint Stn Common Struct & Sys-C	465.84	0	0	0	0	0
HGH	268 RST	NE	NHGZZZZ	201	Maint St Common Misc Equip-Corr	0	0	0	0	0	87.30
HGH	271 R05	NE	NHGZZZZ	201	Maint Fuel Feed System-Corrective	0	0	18.62	0	0	0
HGH	271 R06	NE	NHGZZZZ	201	Maint Fuel Feed System-Corrective	1,179.28	0	0	0	0	0
HGH	277 A11	NE	NHGZZZZ	201	Maint Int Combust Eng & Rel Eq-C	0	0	0	0	0	1,030.27
HGH	375 AOC	NE	NHGZZZZ	201	Schedule Generation Resources	0	0	0	0	898.72	0
HGH	789 RST	NE	NHGZZZZ	201	Attend Training	0	0	116.20	0	156.30	24.15
HGH	797 HEL	NE	NHGZZZZ	201	Attend Safety Training	2,325.65	0	62.79	0	0	0
HGH	876 RST	NE	NHGZZZZ	201	Comply Ongoing-Wastewater	10,128.64	0	0	(4,002.75)	5,356.38	0
HGH	876 SST	NS	NHGZZZZ	201	Comply Ongoing-Wastewater	0	0	0	0	0	478.17
HGH	877 ANS	NE	NHGZZZZ	201	Comply Ongoing-Solid & Haz Wast	0	4,072.69	0	0	0	0

CA-SIR-10
DOCKET NO. 05-0315
ATTACHMENT 1
PAGE 2 OF 11
(UPDATED 2/9/07)

Hawaii Electric Light Company Inc.
2006 TEST YEAR
2001-2006 Misc Materials

Source: Pillar Control file dtd 01/29/07

RA	Act Loc	Ind	Proj	EE	Activity	FY06 Actual	FY05 Actual	FY04 Actual	FY03 Actual	FY02 Actual	FY01 Actual
HGH	877 ANS	NS	NHGZZZZ	201	Comply Ongoing-Solid & Haz Wast	0	495.24	0	0	0	0
HGH	877 RST	NE	NHGZZZZ	201	Comply Ongoing-Solid & Haz Wast	0	203.21	0	970.11	571.54	0
HGH	877 RST	NS	NHGZZZZ	201	Comply Ongoing-Solid & Haz Wast	0	959.53	0	0	0	0
HGH	878 RST	NE	NHGZZZZ	201	Comply Ongoing-Solid & Haz Wast	0	519.87	0	0	0	0
HGH	931 RST	NE	NHGZZZZ	201	Care for Buildings & Grounds	9,632.97	0	0	0	0	0
HGH				201		268,512.38	212,412.32	158,589.36	104,056.59	166,321.87	146,352.93
HGK	230 BNS	NE	NHGZZZZ	201	Mnge O&M Fuel Facil	0	0	360.35	0	0	0
HGK	230 CNS	NE	NHGZZZZ	201	Mnge O&M Fuel Facil	0	0	360.35	0	0	0
HGK	244 BNS	NE	NHGZZZZ	201	Op & Mon Plt Eq (Make Rounds)-N	16,146.24	23,882.89	21,828.55	30,968.37	33,211.60	7,803.07
HGK	244 C02	NE	NHGZZZZ	201	Op & Mon Plt Eq (Make Rounds)-N	0	(140.50)	13,925.34	13,389.98	5,137.99	3,008.63
HGK	244 C04	NE	NHGZZZZ	201	Op & Mon Plt Eq (Make Rounds)-N	5,031.13	0	9,942.09	0	0.00	0
HGK	244 C05	NE	NHGZZZZ	201	Op & Mon Plt Eq (Make Rounds)-N	5,031.13	0	6,010.90	0	0	0
HGK	244 C18	NE	NHGZZZZ	201	Op & Mon Plt Eq (Make Rounds)-N	0	0	0	141.96	0	0
HGK	244 C19	NE	NHGZZZZ	201	Op & Mon Plt Eq (Make Rounds)-N	0	0	0	141.95	0	0
HGK	244 C22	NE	NHGZZZZ	201	Op & Mon Plt Eq (Make Rounds)-N	0	515.66	0	0	0	0
HGK	244 CNS	NE	NHGZZZZ	201	Op & Mon Plt Eq (Make Rounds)-N	10,338.85	10,776.60	134,255.42	91,534.96	83,350.92	67,294.45
HGK	247 C02	NE	NHGZZZZ	201	Mon Plt/Oprnl Perform-NonSteam/(	0	0	1,147.50	0	0	0
HGK	247 CNS	NE	NHGZZZZ	201	Mon Plt/Oprnl Perform-NonSteam/(	0	0	0	0	181.77	1,663.69
HGK	248 C02	NE	NHGZZZZ	201	Perf Water Treatment & Analysis(P	276.52	4,864.93	12,493.01	3,487.15	7,122.23	22,679.92
HGK	248 C04	NE	NHGZZZZ	201	Perf Water Treatment & Analysis(P	18,314.48	0	1,633.00	0	0	0
HGK	248 C05	NE	NHGZZZZ	201	Perf Water Treatment & Analysis(P	18,314.48	0	1,584.94	0	0	0
HGK	248 CNS	NE	NHGZZZZ	201	Perf Water Treatment & Analysis(P	0	0	0	4,737.84	0	396.01
HGK	256 CNS	NS	NHGZZZZ	201	Plan/Schedule Maintenance & Con	3,161.39	0	0	0	0	0
HGK	263 CNS	NE	NHGZZZZ	201	Maint Stn Common Struct & Sys-Pr	76,987.67	44,149.10	5,026.25	4,379.26	1,121.95	1,027.55
HGK	263 CWT	NE	NHGZZZZ	201	Maint Stn Common Struct & Sys-Pr	3,810.78	13,918.73	0	0	312.60	0
HGK	263 CWW	NE	NHGZZZZ	201	Maint Stn Common Struct & Sys-Pr	12,209.65	8,252.63	733.54	0	0	0
HGK	264 CNS	NE	NHGZZZZ	201	Maint Stn Common Struct & Sys-Pr	0	0	19,660.06	0	0	0
HGK	264 CWT	NE	NHGZZZZ	201	Maint Stn Common Struct & Sys-Pr	10,462.16	1,933.64	4,299.96	0	2,256.13	0
HGK	264 CWW	NE	NHGZZZZ	201	Maint Stn Common Struct & Sys-Pr	2,100.63	14,173.25	0	0	0	0
HGK	265 C02	NE	NHGZZZZ	201	Maint Stn Common Struct & Sys-C(	2,583.60	0	0	0	637.46	0
HGK	265 C04	NE	NHGZZZZ	201	Maint Stn Common Struct & Sys-C(	0	0	0	0	46.24	0
HGK	265 CNS	NE	NHGZZZZ	201	Maint Stn Common Struct & Sys-C(	1,411.51	0	13,267.73	0	4,811.97	779.89
HGK	265 CWT	NE	NHGZZZZ	201	Maint Stn Common Struct & Sys-C(	0	20,651.13	6,816.95	30,705.84	45,434.52	2,401.05
HGK	265 CWT	NS	NHGZZZZ	201	Maint Stn Common Struct & Sys-C(	0	202.57	0	0	0	0
HGK	265 CWW	NE	NHGZZZZ	201	Maint Stn Common Struct & Sys-C(	0	0	0	0	995.09	0
HGK	266 CNS	NE	NHGZZZZ	201	Maint St Common Misc Equip-Prev	17,138.38	46,798.25	203,879.91	36,736.29	10,658.00	(897.25)
HGK	267 CNS	NE	NHGZZZZ	201	Maint St Common Misc Equip-Pred	4,842.35	6,200.52	0	0	0	0
HGK	267 CWW	NE	NHGZZZZ	201	Maint St Common Misc Equip-Pred	794.15	0	0	0	0	0
HGK	268 CNS	NE	NHGZZZZ	201	Maint St Common Misc Equip-Corr	7,406.97	0	1,147.31	424.04	2,013.24	1,150.12
HGK	268 CNS	NS	NHGZZZZ	201	Maint St Common Misc Equip-Corr	5,202.66	0	0	0	0	0
HGK	268 CWT	NE	NHGZZZZ	201	Maint St Common Misc Equip-Corr	0	6,015.08	0	6,771.68	0	0

CA-SIR-10
DOCKET NO. 05-0315
ATTACHMENT 1
PAGE 3 OF 11
(UPDATED 2/9/07)

Hawaii Electric Light Company Inc.
2006 TEST YEAR
2001-2006 Misc Materials

Source: Pillar Control file dtd 01/29/07

RA	Act Loc	Ind	Proj	EE	Activity	FY06 Actual	FY05 Actual	FY04 Actual	FY03 Actual	FY02 Actual	FY01 Actual
HGK	268 CWW	NE	NHGZZZZ	201	Maint St Common Misc Equip-Corr	3,870.80	0	0	0	0	0
HGK	269 C21	NE	NHGZZZZ	201	Maint Fuel Feed System-Preventive	0	0	25,009.52	0	0	0
HGK	269 CNS	NE	NHGZZZZ	201	Maint Fuel Feed System-Preventive	15,373.07	15,381.59	4,522.39	1,800.79	0	0
HGK	270 CNS	NE	NHGZZZZ	201	Maint Fuel Feed System-Predictive	1,493.61	0	0	0	0	0
HGK	271 C02	NE	NHGZZZZ	201	Maint Fuel Feed System-Corrective	0	0	0	0	1,221.74	0
HGK	271 C18	NE	NHGZZZZ	201	Maint Fuel Feed System-Corrective	0	0	0	0	0	913.72
HGK	271 C19	NE	NHGZZZZ	201	Maint Fuel Feed System-Corrective	0	0	0	0	0	183.28
HGK	271 C20	NE	NHGZZZZ	201	Maint Fuel Feed System-Corrective	0	0	0	0	0	282.29
HGK	271 C21	NE	NHGZZZZ	201	Maint Fuel Feed System-Corrective	0	0	0	0	0	282.27
HGK	271 CNS	NE	NHGZZZZ	201	Maint Fuel Feed System-Corrective	438.90	0	0	0	0	0
HGK	272 C02	NE	NHGZZZZ	201	Maint Combust Turbine & Elec Eq-I	4,073.14	16.84	79.64	303.32	6,368.51	673.14
HGK	272 C04	NE	NHGZZZZ	201	Maint Combust Turbine & Elec Eq-I	626.33	2,679.06	2,181.36	0	0	0
HGK	272 C05	NE	NHGZZZZ	201	Maint Combust Turbine & Elec Eq-I	274.16	2,458.57	2,181.28	0	0	0
HGK	273 C02	NE	NHGZZZZ	201	Maint Combust Turbine & Elec Eq-I	4,394.12	3,341.05	0	1,927.12	86.10	632.96
HGK	273 C04	NE	NHGZZZZ	201	Maint Combust Turbine & Elec Eq-I	1,964.76	0	0	0	0	0
HGK	274 C02	NE	NHGZZZZ	201	Maint Combust Turbine & Elec Eq-(	3,091.39	3,510.31	5,879.67	11,196.17	22,900.25	29,866.73
HGK	274 C04	NE	NHGZZZZ	201	Maint Combust Turbine & Elec Eq-(	31,469.09	43,716.46	1,482.48	122.92	9,872.87	0
HGK	274 C04	NS	NHGZZZZ	201	Maint Combust Turbine & Elec Eq-(	0	344.28	0	0	0	0
HGK	274 C05	NE	NHGZZZZ	201	Maint Combust Turbine & Elec Eq-(	9,100.32	25,903.92	458.60	0	0	0
HGK	274 C05	NS	NHGZZZZ	201	Maint Combust Turbine & Elec Eq-(	0	240.47	0	0	0	0
HGK	275 B12	NE	NHGZZZZ	201	Maint Int Combust Eng & Rel Eq-Pı	0	4,989.00	212.48	7,927.41	0	0
HGK	275 B13	NE	NHGZZZZ	201	Maint Int Combust Eng & Rel Eq-Pı	0	4,942.27	212.48	0	0	0
HGK	275 B14	NE	NHGZZZZ	201	Maint Int Combust Eng & Rel Eq-Pı	0	180.28	0	0	0	0
HGK	275 C18	NE	NHGZZZZ	201	Maint Int Combust Eng & Rel Eq-Pı	0	0	0	0	169.41	0
HGK	275 C19	NE	NHGZZZZ	201	Maint Int Combust Eng & Rel Eq-Pı	0	0	0	8,344.87	169.41	0
HGK	275 C20	NE	NHGZZZZ	201	Maint Int Combust Eng & Rel Eq-Pı	0	0	0	0	180.00	0
HGK	275 C21	NE	NHGZZZZ	201	Maint Int Combust Eng & Rel Eq-Pı	1,088.00	15.85	0	0	180.00	0
HGK	275 C22	NE	NHGZZZZ	201	Maint Int Combust Eng & Rel Eq-Pı	1,088.00	18,963.92	5,353.92	0	180.00	0
HGK	275 C23	NE	NHGZZZZ	201	Maint Int Combust Eng & Rel Eq-Pı	1,120.96	32.01	0	0	179.99	0
HGK	275 D25	NE	NHGZZZZ	201	Maint Int Combust Eng & Rel Eq-Pı	669.48	322.63	0	1,910.71	849.48	0
HGK	275 D27	NE	NHGZZZZ	201	Maint Int Combust Eng & Rel Eq-Pı	669.50	0	0	377.79	0	0
HGK	276 B12	NE	NHGZZZZ	201	Maint Int Combust Eng & Rel Eq-Pı	0	942.40	0	0	0	0
HGK	276 B14	NE	NHGZZZZ	201	Maint Int Combust Eng & Rel Eq-Pı	0	942.40	0	0	0	0
HGK	276 C18	NE	NHGZZZZ	201	Maint Int Combust Eng & Rel Eq-Pı	0	0	0	1,692.56	0	0
HGK	276 C21	NE	NHGZZZZ	201	Maint Int Combust Eng & Rel Eq-Pı	0	0	231.21	3,157.73	0	0
HGK	276 C22	NE	NHGZZZZ	201	Maint Int Combust Eng & Rel Eq-Pı	36.15	1,338.24	1,784.80	3,157.73	40.24	0
HGK	276 C23	NE	NHGZZZZ	201	Maint Int Combust Eng & Rel Eq-Pı	0	965.07	8,767.29	(26.00)	3,907.49	0
HGK	276 CNS	NE	NHGZZZZ	201	Maint Int Combust Eng & Rel Eq-Pı	0	0	62.30	0	0	0
HGK	277 C18	NE	NHGZZZZ	201	Maint Int Combust Eng & Rel Eq-C(	0	0	0	2,914.32	1,969.81	1,246.18
HGK	277 C19	NE	NHGZZZZ	201	Maint Int Combust Eng & Rel Eq-C(	0	0	672.88	7,288.00	16,130.36	46,298.04
HGK	277 C20	NE	NHGZZZZ	201	Maint Int Combust Eng & Rel Eq-C(	0	0	1,775.35	17,776.41	8,330.34	6,880.70
HGK	277 C21	NE	NHGZZZZ	201	Maint Int Combust Eng & Rel Eq-C(	2,574.91	42.29	2,204.08	1,500.44	3,071.84	3,500.01

CA-SIR-10
DOCKET NO. 05-0315
ATTACHMENT 1
PAGE 4 OF 11
(UPDATED 2/9/07)

Source: Pillar Control file dtd 01/29/07

RA	Act Loc	Ind	Proj	EE	Activity	FY06 Actual	FY05 Actual	FY04 Actual	FY03 Actual	FY02 Actual	FY01 Actual
HGK	277 C22	NE	NHGZZZZ	201	Maint Int Combust Eng & Rel Eq-C	1,932.18	581.97	3,565.47	6,998.16	23,915.20	15,286.69
HGK	277 C23	NE	NHGZZZZ	201	Maint Int Combust Eng & Rel Eq-C	109.75	700.25	5,475.97	10,923.46	2,815.73	61,169.03
HGK	277 CNS	NE	NHGZZZZ	201	Maint Int Combust Eng & Rel Eq-C	0	0	458.50	4,258.83	339.99	0
HGK	277 D25	NE	NHGZZZZ	201	Maint Int Combust Eng & Rel Eq-C	0	0	476.99	116.66	329.02	261.13
HGK	277 D26	NE	NHGZZZZ	201	Maint Int Combust Eng & Rel Eq-C	0	0	0	1,372.01	0	0
HGK	277 D27	NE	NHGZZZZ	201	Maint Int Combust Eng & Rel Eq-C	0	9,717.15	476.94	116.65	360.01	261.17
HGK	807 CNS	NE	NHGZZZZ	201	Manage & Provide Companywide E	0	0	0	0	0	145.53
HGK	875 C02	NE	NHGZZZZ	201	Comply Ongoing Permit/Reg Reqs-	0	120.32	0	317.41	0	107.60
HGK	875 CNS	NE	NHGZZZZ	201	Comply Ongoing Permit/Reg Reqs-	0	0	33,372.76	0	0	0
HGK	878 CNS	NE	NHGZZZZ	201	Comply Ongoing-Solid & Haz Wast	0	0	0	0	61.61	0
HGK	931 CNS	NE	NHGZZZZ	201	Care for Buildings & Grounds	0	0	0	0	0	173.98
HGK				201		307,023.35	344,583.08	565,271.52	318,894.79	300,921.11	275,471.58
HGM	244 A01	NE	NHGZZZZ	201	Op & Mon Plt Eq (Make Rounds)-N	0	0	0	0	0	1,139.11
HGM	244 P03	NE	NHGZZZZ	201	Op & Mon Plt Eq (Make Rounds)-N	0	0	0	78.41	163.19	0
HGM	245 R06	NE	NHGZZZZ	201	Mon Plt/Oprnl Performance-Boiler I	0	0	0	1,042.01	0	0
HGM	246 R05	NE	NHGZZZZ	201	Mon Plt/Oprnl Performance-TurboG	0	0	0	954.92	0	0
HGM	247 A15	NE	NHGZZZZ	201	Mon Plt/Oprnl Perform-NonSteam/(	0	0	0	0	0	21.79
HGM	247 A16	NE	NHGZZZZ	201	Mon Plt/Oprnl Perform-NonSteam/(	0	0	0	0	0	21.79
HGM	247 A17	NE	NHGZZZZ	201	Mon Plt/Oprnl Perform-NonSteam/(	0	0	0	0	0	22.70
HGM	247 ANS	NE	NHGZZZZ	201	Mon Plt/Oprnl Perform-NonSteam/(	0	0	0	0	127.24	0
HGM	247 B12	NE	NHGZZZZ	201	Mon Plt/Oprnl Perform-NonSteam/(	0	0	0	0	0	8.17
HGM	247 B13	NE	NHGZZZZ	201	Mon Plt/Oprnl Perform-NonSteam/(	0	0	0	0	0	8.17
HGM	247 B14	NE	NHGZZZZ	201	Mon Plt/Oprnl Perform-NonSteam/(	0	0	0	0	0	8.17
HGM	247 BNS	NE	NHGZZZZ	201	Mon Plt/Oprnl Perform-NonSteam/(	0	0	0	0	54.53	0
HGM	247 P03	NE	NHGZZZZ	201	Mon Plt/Oprnl Perform-NonSteam/(	0	0	0	3,792.85	0	0
HGM	247 PT2	NE	NHGZZZZ	201	Mon Plt/Oprnl Perform-NonSteam/(	0	0	0	34,189.31	0	0
HGM	248 RST	NE	NHGZZZZ	201	Perf Water Treatment & Analysis(P	0	0	0	0	1,793.77	0
HGM	256 P03	NS	NHGZZZZ	201	Plan/Schedule Maintenance & Con	0	0	2,222.42	0	0	0
HGM	257 P01	NE	NHGZZZZ	201	Maint Boiler Plt & Rel Eq-Prev	6,340.75	111,361.54	9,419.52	476.30	128.73	0
HGM	257 R05	NE	NHGZZZZ	201	Maint Boiler Plt & Rel Eq-Prev	7,052.05	0	0	735.55	871.68	266.48
HGM	257 R06	NE	NHGZZZZ	201	Maint Boiler Plt & Rel Eq-Prev	707.36	0	3,119.68	1,462.37	128.74	5,891.92
HGM	257 S03	NE	NHGZZZZ	201	Maint Boiler Plt & Rel Eq-Prev	0	35,261.70	1,208.51	224.27	1,858.91	0
HGM	257 S04	NE	NHGZZZZ	201	Maint Boiler Plt & Rel Eq-Prev	0	1,102.65	0	844.22	128.74	0
HGM	257 SST	NE	NHGZZZZ	201	Maint Boiler Plt & Rel Eq-Prev	0	0	214.61	18,977.92	0	0
HGM	259 P01	NE	NHGZZZZ	201	Maint Boiler Plt & Rel Eq-Corr	33,037.72	51,539.86	71,435.60	45,904.39	106,966.45	26,383.48
HGM	259 PST	NE	NHGZZZZ	201	Maint Boiler Plt & Rel Eq-Corr	0	5,411.68	0	0	0	0
HGM	259 R05	NE	NHGZZZZ	201	Maint Boiler Plt & Rel Eq-Corr	5,556.16	30,004.81	132,670.26	62,802.89	42,819.69	55,583.86
HGM	259 R06	NE	NHGZZZZ	201	Maint Boiler Plt & Rel Eq-Corr	8,456.42	55,534.82	18,395.80	93,838.64	79,728.35	104,494.71
HGM	259 RST	NE	NHGZZZZ	201	Maint Boiler Plt & Rel Eq-Corr	45.99	0	0	0	0	0
HGM	259 S01	NE	NHGZZZZ	201	Maint Boiler Plt & Rel Eq-Corr	0	0	0	0	2,457.69	0
HGM	259 S03	NE	NHGZZZZ	201	Maint Boiler Plt & Rel Eq-Corr	16,491.04	(86,542.73)	188,321.42	18,124.38	19,962.88	13,025.76

CA-SIR-10
DOCKET NO. 05-0315
ATTACHMENT 1
PAGE 5 OF 11
(UPDATED 2/9/07)

Source: Pillar Control file dtd 01/29/07

RA	Act Loc	Ind	Proj	EE	Activity	FY06 Actual	FY05 Actual	FY04 Actual	FY03 Actual	FY02 Actual	FY01 Actual
HGM	259 S04	NE	NHGZZZZ	201	Maint Boiler Plt & Rel Eq-Corr	15,727.90	24,766.31	30,346.05	680.37	31,422.07	21,556.96
HGM	259 SST	NE	NHGZZZZ	201	Maint Boiler Plt & Rel Eq-Corr	320.67	823.07	19,623.33	3,433.32	0	0
HGM	260 P01	NE	NHGZZZZ	201	Maint Steam TurboGen & Rel Eq-P	193.20	324.86	273.32	0	107.84	10.41
HGM	260 P03	NE	NHGZZZZ	201	Maint Steam TurboGen & Rel Eq-P	0	76.73	0	0	0	0
HGM	260 R05	NE	NHGZZZZ	201	Maint Steam TurboGen & Rel Eq-P	172.18	416.76	0	265.80	186.03	485.67
HGM	260 R06	NE	NHGZZZZ	201	Maint Steam TurboGen & Rel Eq-P	680.80	1,315.85	786.30	399.28	143.79	213.73
HGM	260 RST	NS	NHGZZZZ	201	Maint Steam TurboGen & Rel Eq-P	(40.00)	1,220.02	0	0	0	0
HGM	260 S03	NE	NHGZZZZ	201	Maint Steam TurboGen & Rel Eq-P	134.54	0	0	0	153.59	43.56
HGM	260 S04	NE	NHGZZZZ	201	Maint Steam TurboGen & Rel Eq-P	0	0	175.79	0	0	43.56
HGM	261 S03	NE	NHGZZZZ	201	Maint Steam TurboGen & Rel Eq-P	0	0	45,581.02	0	0	0
HGM	261 S04	NE	NHGZZZZ	201	Maint Steam TurboGen & Rel Eq-P	0	0	43,878.49	0	0	0
HGM	262 P01	NE	NHGZZZZ	201	Maint Steam TurboGen & Rel Eq-C	12,213.08	10,955.84	4,762.85	9,744.30	11,916.08	5,220.62
HGM	262 R05	NE	NHGZZZZ	201	Maint Steam TurboGen & Rel Eq-C	692.64	1,697.22	9,690.19	13,806.34	511.27	638.22
HGM	262 R05	NS	NHGZZZZ	201	Maint Steam TurboGen & Rel Eq-C	0	21,731.72	0	0	0	0
HGM	262 R06	NE	NHGZZZZ	201	Maint Steam TurboGen & Rel Eq-C	867.57	1,055.15	190.19	11,821.72	4,023.85	0
HGM	262 R06	NS	NHGZZZZ	201	Maint Steam TurboGen & Rel Eq-C	0	0.00	0	0	0	0
HGM	262 RST	NE	NHGZZZZ	201	Maint Steam TurboGen & Rel Eq-C	0	0	0	885.89	0	0
HGM	262 S03	NE	NHGZZZZ	201	Maint Steam TurboGen & Rel Eq-C	0	0	9,423.03	0	3,526.27	0
HGM	262 S04	NE	NHGZZZZ	201	Maint Steam TurboGen & Rel Eq-C	1,313.65	466.15	3,887.55	0	200.80	152.90
HGM	262 SST	NE	NHGZZZZ	201	Maint Steam TurboGen & Rel Eq-C	0	0	21,880.60	77,001.07	0	0
HGM	263 ANS	NE	NHGZZZZ	201	Maint Stn Common Struct & Sys-Pr	0	448.81	2,982.07	8,725.83	29,821.51	1,149.73
HGM	263 BNS	NE	NHGZZZZ	201	Maint Stn Common Struct & Sys-Pr	0	59.95	678.26	742.56	0	0
HGM	263 P03	NE	NHGZZZZ	201	Maint Stn Common Struct & Sys-Pr	0	0	0	1,342.88	0	0
HGM	263 RST	NE	NHGZZZZ	201	Maint Stn Common Struct & Sys-Pr	0	0	5,556.42	0	0	0
HGM	263 RW1	NE	NHGZZZZ	201	Maint Stn Common Struct & Sys-Pr	0	0	0	0	0.00	0
HGM	263 SST	NE	NHGZZZZ	201	Maint Stn Common Struct & Sys-Pr	0	0	0	0	0	4.56
HGM	263 VHY	NE	NHGZZZZ	201	Maint Stn Common Struct & Sys-Pr	0	53.96	104.68	0	0	293.28
HGM	264 ANS	NE	NHGZZZZ	201	Maint Stn Common Struct & Sys-Pr	0	0	7,685.63	0	0	0
HGM	264 BNS	NE	NHGZZZZ	201	Maint Stn Common Struct & Sys-Pr	0	1,227.92	11,802.92	0	26.03	0
HGM	265 ANS	NE	NHGZZZZ	201	Maint Stn Common Struct & Sys-C	0	0	1,012.85	254.99	414.79	0
HGM	265 BNS	NE	NHGZZZZ	201	Maint Stn Common Struct & Sys-C	0	0	0	1,831.27	275.37	236.33
HGM	265 P01	NE	NHGZZZZ	201	Maint Stn Common Struct & Sys-C	221.41	627.44	2,163.99	17,571.87	7,886.59	17,073.25
HGM	265 P03	NE	NHGZZZZ	201	Maint Stn Common Struct & Sys-C	0	0	8,288.00	0	0	0
HGM	265 PST	NE	NHGZZZZ	201	Maint Stn Common Struct & Sys-C	4,150.68	0	0	0	0	0
HGM	265 PT1	NE	NHGZZZZ	201	Maint Stn Common Struct & Sys-C	0	0	0	0	0	2,770.15
HGM	265 PT2	NE	NHGZZZZ	201	Maint Stn Common Struct & Sys-C	0	0	8,885.34	42,036.43	44,493.05	9,744.85
HGM	265 PT2	NS	NHGZZZZ	201	Maint Stn Common Struct & Sys-C	0	0	0	5,684.04	0	0
HGM	265 PTF	NE	NHGZZZZ	201	Maint Stn Common Struct & Sys-C	0	0	0	0	245.04	1,331.52
HGM	265 PWW	NE	NHGZZZZ	201	Maint Stn Common Struct & Sys-C	0	0	0	7.92	4,230.07	160.53
HGM	265 RST	NE	NHGZZZZ	201	Maint Stn Common Struct & Sys-C	8,448.55	29,615.19	3,054.07	3,772.31	12,828.54	2,001.06
HGM	265 RTF	NE	NHGZZZZ	201	Maint Stn Common Struct & Sys-C	641.68	0	3,519.20	0	0	697.14
HGM	265 RW1	NE	NHGZZZZ	201	Maint Stn Common Struct & Sys-C	3,447.68	0	472.68	480.56	11,421.81	5,595.91

CA-SIR-10
DOCKET NO. 05-0315
ATTACHMENT 1
PAGE 6 OF 11
(UPDATED 2/9/07)

Hawaii Electric Light Company Inc.
2006 TEST YEAR
2001-2006 Misc Materials

Source: Pillar Control file dtd 01/29/07

RA	Act Loc	Ind	Proj	EE	Activity	FY06 Actual	FY05 Actual	FY04 Actual	FY03 Actual	FY02 Actual	FY01 Actual
HGM	265 RWT	NE	NHGZZZZ	201	Maint Stn Common Struct & Sys-C	0	1,061.71	0	1,074.68	0	3,949.44
HGM	265 SST	NE	NHGZZZZ	201	Maint Stn Common Struct & Sys-C	13,077.33	3,185.26	18,888.70	2,702.42	24,977.89	253.30
HGM	265 STF	NE	NHGZZZZ	201	Maint Stn Common Struct & Sys-C	0	0	0	156.87	0	0
HGM	265 SWT	NE	NHGZZZZ	201	Maint Stn Common Struct & Sys-C	3,102.85	0	1,371.07	0	2,064.48	0
HGM	265 SWW	NE	NHGZZZZ	201	Maint Stn Common Struct & Sys-C	0	0	0	11,888.82	0	0
HGM	265 UHY	NE	NHGZZZZ	201	Maint Stn Common Struct & Sys-C	1,655.83	1,216.01	49.89	0	551.62	509.93
HGM	265 VHY	NE	NHGZZZZ	201	Maint Stn Common Struct & Sys-C	0	10,385.51	49.90	1,409.27	498.85	28.61
HGM	266 ANS	NE	NHGZZZZ	201	Maint St Common Misc Equip-Prev	5.20	0	2,198.82	16,925.62	34,082.49	24,523.87
HGM	266 BNS	NE	NHGZZZZ	201	Maint St Common Misc Equip-Prev	0	0	0	0	186.01	0
HGM	266 P01	NE	NHGZZZZ	201	Maint St Common Misc Equip-Prev	0	0	15,897.71	114,077.08	0	0
HGM	266 RST	NE	NHGZZZZ	201	Maint St Common Misc Equip-Prev	71,433.13	37,842.00	38,150.70	19,149.31	0	0
HGM	266 SST	NE	NHGZZZZ	201	Maint St Common Misc Equip-Prev	0	203.46	98,387.04	20,006.89	0	0
HGM	268 BNS	NE	NHGZZZZ	201	Maint St Common Misc Equip-Corr	0	0	0	0	131.79	117.48
HGM	268 P01	NE	NHGZZZZ	201	Maint St Common Misc Equip-Corr	0	15,315.20	37.77	21,026.11	0	0
HGM	268 P03	NS	NHGZZZZ	201	Maint St Common Misc Equip-Corr	0	555.42	0	0	0	0
HGM	268 RWT	NE	NHGZZZZ	201	Maint St Common Misc Equip-Corr	1,029.51	0	0	0	0	0
HGM	268 SST	NE	NHGZZZZ	201	Maint St Common Misc Equip-Corr	0	0	0	12,894.59	1,117.60	0
HGM	268 SST	NS	NHGZZZZ	201	Maint St Common Misc Equip-Corr	0	1,000.25	0	0	0	0
HGM	269 A15	NE	NHGZZZZ	201	Maint Fuel Feed System-Preventive	0	0	0	56.70	0	0
HGM	270 RST	NE	NHGZZZZ	201	Maint Fuel Feed System-Predictive	0	0	0	867.92	0	0
HGM	271 A16	NE	NHGZZZZ	201	Maint Fuel Feed System-Corrective	0	0	0	0	42,982.36	0
HGM	271 A17	NE	NHGZZZZ	201	Maint Fuel Feed System-Corrective	0	0	0	14,001.83	0	5,096.67
HGM	271 ANS	NE	NHGZZZZ	201	Maint Fuel Feed System-Corrective	0	0	0	0	186.45	0
HGM	271 P01	NE	NHGZZZZ	201	Maint Fuel Feed System-Corrective	0	0	0	416.46	4,807.34	17,833.69
HGM	271 P03	NE	NHGZZZZ	201	Maint Fuel Feed System-Corrective	0	0	4,848.83	19,719.04	6,491.92	3,973.79
HGM	271 R05	NE	NHGZZZZ	201	Maint Fuel Feed System-Corrective	158.34	0	1,239.26	4,038.59	22,801.85	0
HGM	271 R06	NE	NHGZZZZ	201	Maint Fuel Feed System-Corrective	0	0	1,239.25	0	0	41,886.14
HGM	271 RST	NE	NHGZZZZ	201	Maint Fuel Feed System-Corrective	0	156.48	2,642.91	7,524.92	8,888.02	7,430.21
HGM	271 S03	NE	NHGZZZZ	201	Maint Fuel Feed System-Corrective	0	0	0	0	1,012.42	1,119.46
HGM	271 S04	NE	NHGZZZZ	201	Maint Fuel Feed System-Corrective	23,229.37	11,429.66	0	0	54.68	4,953.14
HGM	271 SST	NE	NHGZZZZ	201	Maint Fuel Feed System-Corrective	6,974.04	725.56	3,509.30	8,447.76	9,528.43	0
HGM	272 A01	NE	NHGZZZZ	201	Maint Combust Turbine & Elec Eq-I	0	1,275.64	0	406.39	0	0
HGM	272 P03	NE	NHGZZZZ	201	Maint Combust Turbine & Elec Eq-I	0	0	0	252.41	(108,478.14)	0
HGM	273 P03	NE	NHGZZZZ	201	Maint Combust Turbine & Elec Eq-I	0	0	0	2,572.59	78.29	698.85
HGM	274 A01	NE	NHGZZZZ	201	Maint Combust Turbine & Elec Eq-(	0	0	11,084.76	16,730.42	220.46	12,897.95
HGM	274 OUT	BE	NHGZZZZ	201	Maint Combust Turbine & Elec Eq-(	0	0	0	0	1,487.59	0
HGM	274 P03	NE	NHGZZZZ	201	Maint Combust Turbine & Elec Eq-(	0	0	7.25	11,230.43	68,709.90	23,125.44
HGM	275 A15	NE	NHGZZZZ	201	Maint Int Combust Eng & Rel Eq-Pr	0.00	0	0	5,062.23	0	0
HGM	275 A17	NE	NHGZZZZ	201	Maint Int Combust Eng & Rel Eq-Pr	0	368.54	0	5,922.77	0	0
HGM	275 D26	NE	NHGZZZZ	201	Maint Int Combust Eng & Rel Eq-Pr	0	0	0	155.19	0	0
HGM	276 A15	NE	NHGZZZZ	201	Maint Int Combust Eng & Rel Eq-Pr	0	9,884.53	0	0	4,857.17	0
HGM	277 A11	NE	NHGZZZZ	201	Maint Int Combust Eng & Rel Eq-C	0	0	0	1,774.45	733.85	358.72

CA-SIR-10
DOCKET NO. 05-0315
ATTACHMENT 1
PAGE 7 OF 11
(UPDATED 2/9/07)

Source: Pillar Control file dtd 01/29/07

RA	Act Loc	Ind	Proj	EE	Activity	FY06 Actual	FY05 Actual	FY04 Actual	FY03 Actual	FY02 Actual	FY01 Actual
HGM	277 A15	NE	NHGZZZZ	201	Maint Int Combust Eng & Rel Eq-C	0	0	594.88	1,504.14	1,993.62	40,747.08
HGM	277 A15	NS	NHGZZZZ	201	Maint Int Combust Eng & Rel Eq-C	0	0	0	0	0	50.84
HGM	277 A16	NE	NHGZZZZ	201	Maint Int Combust Eng & Rel Eq-C	0	0	0	1,485.01	22,073.51	2,626.82
HGM	277 A17	NE	NHGZZZZ	201	Maint Int Combust Eng & Rel Eq-C	0	0	524.68	1,465.35	1,942.23	589.02
HGM	277 ANS	NE	NHGZZZZ	201	Maint Int Combust Eng & Rel Eq-C	0	584.51	67.81	0	542.82	54.48
HGM	277 B08	NE	NHGZZZZ	201	Maint Int Combust Eng & Rel Eq-C	0	0	0	0	0	16.92
HGM	277 B12	NE	NHGZZZZ	201	Maint Int Combust Eng & Rel Eq-C	0	0	0	245.64	2,424.29	9,399.19
HGM	277 B13	NE	NHGZZZZ	201	Maint Int Combust Eng & Rel Eq-C	47.88	0	0	8,688.44	6,065.34	30,893.20
HGM	277 B14	NE	NHGZZZZ	201	Maint Int Combust Eng & Rel Eq-C	0	0	0	1,491.32	2,988.33	1,206.87
HGM	277 BNS	NE	NHGZZZZ	201	Maint Int Combust Eng & Rel Eq-C	0	584.50	67.80	0	287.50	5.72
HGM	277 C23	NE	NHGZZZZ	201	Maint Int Combust Eng & Rel Eq-C	0	0	0	0	0	190.95
HGM	277 D24	NE	NHGZZZZ	201	Maint Int Combust Eng & Rel Eq-C	0	54.51	0	0	382.36	261.13
HGM	277 D26	NE	NHGZZZZ	201	Maint Int Combust Eng & Rel Eq-C	0	0	0	0	1,060.42	261.13
HGM	278 U02	NE	NHGZZZZ	201	Maint Renew Energy & Rel Eq-Prev	0	96.20	0	308.50	0	67.61
HGM	278 V01	NE	NHGZZZZ	201	Maint Renew Energy & Rel Eq-Prev	43.75	115.70	857.00	314.46	71.95	176.02
HGM	278 V02	NE	NHGZZZZ	201	Maint Renew Energy & Rel Eq-Prev	0	0	657.16	209.82	0	43.96
HGM	278 VHY	NE	NHGZZZZ	201	Maint Renew Energy & Rel Eq-Prev	11,890.11	0	0	0	0	0
HGM	280 U01	NE	NHGZZZZ	201	Maint Renew Energy & Rel Eq-Con	897.91	0	0	0.00	0	42.86
HGM	280 U02	NE	NHGZZZZ	201	Maint Renew Energy & Rel Eq-Con	0	0	(363.18)	12.22	1,578.91	110.74
HGM	280 UHY	NE	NHGZZZZ	201	Maint Renew Energy & Rel Eq-Con	14,374.08	0	0	0	40.56	1,335.70
HGM	280 V01	NE	NHGZZZZ	201	Maint Renew Energy & Rel Eq-Con	0	1,243.07	0	0	0	862.78
HGM	280 V02	NE	NHGZZZZ	201	Maint Renew Energy & Rel Eq-Con	0	0	0	0	0	322.13
HGM	280 V02	NS	NHGZZZZ	201	Maint Renew Energy & Rel Eq-Con	0	0	5,499.65	0	0	0
HGM	280 VHY	NE	NHGZZZZ	201	Maint Renew Energy & Rel Eq-Con	1,265.91	1,177.16	0	0	135.30	124.85
HGM	353 ANS	NE	NHGZZZZ	201	Maint Substation Trans Structure-C	0	0	0	0	137.06	0
HGM	789 ANS	NE	NHGZZZZ	201	Attend Training	0	0	0	0	4,346.94	0
HGM	789 RST	NE	NHGZZZZ	201	Attend Training	(41.60)	3,094.49	122.48	0	18.43	0
HGM	797 ANS	NE	NHGZZZZ	201	Attend Safety Training	0	0	0	0	19.50	9.81
HGM	797 RST	NE	NHGZZZZ	201	Attend Safety Training	56.23	0	13.52	0	0	0
HGM	850 HEL	NC	NHGZZZZ	201	Process Material & Transactions	0	0	0	0	4,431.02	0
HGM	851 HEL	NC	NHGZZZZ	201	Reclaim/Refurbish Materials-Stock	0	0	0	0	0	1,367.64
HGM	853 HEL	NC	NHGZZZZ	201	Perform Inventory Control for Mater	0	6,221.74	0	0	976.48	0
HGM	875 SST	NE	NHGZZZZ	201	Comply Ongoing Permit/Reg Reqs-	0	0	0	4,191.40	0	0
HGM	876 SST	NE	NHGZZZZ	201	Comply Ongoing-Wastewater	0	0	0	0	0.00	0
HGM	877 RST	NE	NHGZZZZ	201	Comply Ongoing-Solid & Haz Wast	0	0	0	0	0	271.35
HGM	878 ANS	NE	NHGZZZZ	201	Comply Ongoing-Solid & Haz Wast	0	0	0	0	0	45.40
HGM	931 ANS	NE	NHGZZZZ	201	Care for Buildings & Grounds	948.03	325.47	382.36	0	0	399.48
HGM	931 RST	NE	NHGZZZZ	201	Care for Buildings & Grounds	0	0	0	0	0	399.48
HGM	932 RST	NE	NHGZZZZ	201	Repair Buildings & Grounds	0	0	0	280.18	0	0
HGM	934 RST	NE	NHGZZZZ	201	Provide & Manage Services-Custoc	0	0	713.86	0	0	0
HGM	943 HEL	NC	NHGZZZZ	201	Manage Vehicle Fueling	0	0	0	0	0	3.44
HGM				201		277,021.62	408,659.86	882,453.82	824,625.42	600,514.87	516,943.34

CA-SIR-10
DOCKET NO. 05-0315
ATTACHMENT 1
PAGE 8 OF 11
(UPDATED 2/9/07)

Source: Pillar Control file dtd 01/29/07

RA	Act Loc	Ind	Proj	EE	Activity	FY06 Actual	FY05 Actual	FY04 Actual	FY03 Actual	FY02 Actual	FY01 Actual
HGP	220 P01	NE	NHGZZZZ	201	Manage Fuel Supply Procurement	0	(11,607.29)	16,896.83	0	0	0
HGP	220 P03	NE	NHGZZZZ	201	Manage Fuel Supply Procurement	0	0	0	1,396.16	1,545.84	0
HGP	230 P03	NE	NHGZZZZ	201	Mnge O&M Fuel Facil	0	0	360.35	0	0	0
HGP	242 P01	NE	NHGZZZZ	201	Op & Mon Plt Eq (Make Rounds)-B	12,102.24	16,841.48	11,952.14	19,260.69	24,785.75	12,617.13
HGP	242 PST	NE	NHGZZZZ	201	Op & Mon Plt Eq (Make Rounds)-B	447.84	176.87	135.63	100.59	0	0
HGP	244 P03	NE	NHGZZZZ	201	Op & Mon Plt Eq (Make Rounds)-N	26,999.44	16,856.39	26,624.49	12,480.68	22,577.46	16,988.94
HGP	248 P01	NE	NHGZZZZ	201	Perf Water Treatment & Analysis(P	41,081.21	47,954.47	62,980.98	51,344.31	76,196.66	63,967.55
HGP	248 P03	NE	NHGZZZZ	201	Perf Water Treatment & Analysis(P	19,734.95	19,487.20	8,352.50	19,129.63	36,413.89	19,112.50
HGP	257 P01	NE	NHGZZZZ	201	Maint Boiler Plt & Rel Eq-Prev	0	24,086.64	0	0	0	0
HGP	259 P01	NE	NHGZZZZ	201	Maint Boiler Plt & Rel Eq-Corr	68,798.81	6,585.35	12,952.35	386.04	0	1,333.42
HGP	262 P01	NE	NHGZZZZ	201	Maint Steam TurboGen & Rel Eq-C	0	0	5,809.67	1,560.61	0	0
HGP	265 PST	NE	NHGZZZZ	201	Maint Stn Common Struct & Sys-C	6,669.91	806.49	7.80	0	312.54	4,596.61
HGP	265 PTF	NE	NHGZZZZ	201	Maint Stn Common Struct & Sys-C	0	0	0	0	4,086.54	0
HGP	265 PWW	NE	NHGZZZZ	201	Maint Stn Common Struct & Sys-C	24.67	969.30	101.74	0	0	0
HGP	266 PWW	NE	NHGZZZZ	201	Maint St Common Misc Equip-Prev	0	0	0	0	325.47	0
HGP	268 P03	NE	NHGZZZZ	201	Maint St Common Misc Equip-Corr	0	0	0	0	90.67	0
HGP	271 P01	NE	NHGZZZZ	201	Maint Fuel Feed System-Corrective	0	0	0	140.36	0	0
HGP	274 P03	NE	NHGZZZZ	201	Maint Combust Turbine & Elec Eq-	62,437.52	22,073.41	6,326.64	2,637.07	0	5,002.13
HGP	875 P03	NE	NHGZZZZ	201	Comply Ongoing Permit/Reg Reqs-	0	0	1,386.47	0	0	64.80
HGP	877 P01	NE	NHGZZZZ	201	Comply Ongoing-Solid & Haz Wast	0	0	2,042.36	0	1,044.01	0
HGP	878 P01	NE	NHGZZZZ	201	Comply Ongoing-Solid & Haz Wast	0	0	170.73	0	0	0
HGP	878 P03	NE	NHGZZZZ	201	Comply Ongoing-Solid & Haz Wast	0	196.37	0	0	0	0
HGP	931 PST	NE	NHGZZZZ	201	Care for Buildings & Grounds	0	0	0	0	0	249.98
HGP				201		238,296.59	144,426.68	156,100.68	108,436.14	167,378.83	123,933.06
HGT	211 RST	NS	NHGZZZZ	201	Engr, Design & Manage Projects	294.32	993.58	383.64	508.14	0	0
HGT	230 RST	NE	NHGZZZZ	201	Mnge O&M Fuel Facil	0	0	509.13	0	0	0
HGT	263 PTF	NE	NHGZZZZ	201	Maint Stn Common Struct & Sys-Pr	1,724.11	0	0	0	0	0
HGT	263 RTF	NE	NHGZZZZ	201	Maint Stn Common Struct & Sys-Pr	1,649.20	0	0	0	0	0
HGT	263 UHY	NS	NHGZZZZ	201	Maint Stn Common Struct & Sys-Pr	5,803.65	0	0	0	0	0
HGT	275 A11	NE	NHGZZZZ	201	Maint Int Combust Eng & Rel Eq-Pr	0	0	0	4,417.81	0	0
HGT	789 RST	NS	NHGZZZZ	201	Attend Training	0	5.50	0	0	0	0
HGT	876 ANS	NE	NHGZZZZ	201	Comply Ongoing-Wastewater	0	0	700.77	0	0	0
HGT	876 RST	NE	NHGZZZZ	201	Comply Ongoing-Wastewater	0	0	0	290.32	234.80	0
HGT	877 P01	NE	NHGZZZZ	201	Comply Ongoing-Solid & Haz Wast	0	0	0	735.23	0	0
HGT	878 ANS	NS	NHGZZZZ	201	Comply Ongoing-Solid & Haz Wast	0	0	73.81	0	0	0
HGT	878 RST	NE	NHGZZZZ	201	Comply Ongoing-Solid & Haz Wast	0	0	0	172.38	0	0
HGT				201		9,471.28	999.08	1,667.35	6,123.88	234.80	0
HGW	242 S01	NE	NHGZZZZ	201	Op & Mon Plt Eq (Make Rounds)-B	0	0	0	0	1,328.71	743.80
HGW	242 S03	NE	NHGZZZZ	201	Op & Mon Plt Eq (Make Rounds)-B	18,798.54	6,139.72	2,577.62	9,372.19	3,672.15	1,299.82

CA-SIR-10
DOCKET NO. 05-0315
ATTACHMENT 1
PAGE 9 OF 11
(UPDATED 2/9/07)

Source: Pillar Control file dtd 01/29/07

RA	Act Loc	Ind	Proj	EE	Activity	FY06 Actual	FY05 Actual	FY04 Actual	FY03 Actual	FY02 Actual	FY01 Actual
HGW	242 S04	NE	NHGZZZZ	201	Op & Mon Plt Eq (Make Rounds)-B	17,626.40	5,257.21	11,394.19	7,441.52	3,212.13	1,317.95
HGW	242 SST	NE	NHGZZZZ	201	Op & Mon Plt Eq (Make Rounds)-B	1,031.31	0	0.00	0	1,696.49	299.61
HGW	248 S03	NE	NHGZZZZ	201	Perf Water Treatment & Analysis(P	19,306.26	11,379.91	12,270.98	20,066.96	16,606.57	2,471.79
HGW	248 S04	NE	NHGZZZZ	201	Perf Water Treatment & Analysis(P	19,305.92	11,379.94	10,436.60	20,097.29	16,614.30	2,471.74
HGW	265 SST	NE	NHGZZZZ	201	Maint Stn Common Struct & Sys-C	0	414.05	0	0	0	0
HGW	875 SST	NE	NHGZZZZ	201	Comply Ongoing Permit/Reg Reqs-	0	0	0	0	0.00	0
HGW	876 SST	NE	NHGZZZZ	201	Comply Ongoing-Wastewater	0	0	169.32	0	0	0
HGW	877 SST	NE	NHGZZZZ	201	Comply Ongoing-Solid & Haz Wast	0	203.19	0	0	0	0
HGW	877 SST	NS	NHGZZZZ	201	Comply Ongoing-Solid & Haz Wast	0	959.53	0	0	0	0
HGW				201		76,068.43	35,733.55	36,848.71	56,977.96	43,130.35	8,604.71
HGX	260 P03	NE	NHGZZZZ	201	Maint Steam TurboGen & Rel Eq-P	0	8,403.39	0	0	0	0
HGX	263 ANS	NE	NHGZZZZ	201	Maint Stn Common Struct & Sys-Pr	195.25	796.76	0	0	0	0
HGX	263 BNS	NE	NHGZZZZ	201	Maint Stn Common Struct & Sys-Pr	24.11	697.78	0	0	0	0
HGX	263 P03	NE	NHGZZZZ	201	Maint Stn Common Struct & Sys-Pr	10,954.01	29,729.24	4,627.30	11,920.80	0	0
HGX	263 P03	NS	NHGZZZZ	201	Maint Stn Common Struct & Sys-Pr	75.54	0	0	0	0	0
HGX	265 ANS	NS	NHGZZZZ	201	Maint Stn Common Struct & Sys-C	732.03	0	0	0	0	0
HGX	265 P03	NS	NHGZZZZ	201	Maint Stn Common Struct & Sys-C	641.12	2,658.20	0	0	0	0
HGX	265 PT2	NE	NHGZZZZ	201	Maint Stn Common Struct & Sys-C	32,560.32	55,592.08	39,175.15	0	0	0
HGX	266 ANS	NE	NHGZZZZ	201	Maint St Common Misc Equip-Prev	32,139.76	33,205.23	103,016.11	72,336.40	0	0
HGX	266 BNS	NE	NHGZZZZ	201	Maint St Common Misc Equip-Prev	4,186.16	0	92,909.23	0	0	0
HGX	266 D24	NS	NHGZZZZ	201	Maint St Common Misc Equip-Prev	2,407.05	0	0	0	0	0
HGX	266 P03	NS	NHGZZZZ	201	Maint St Common Misc Equip-Prev	48,074.98	0	0	0	0	0
HGX	267 ANS	NE	NHGZZZZ	201	Maint St Common Misc Equip-Pred	3,212.00	24,590.94	0	0	0	0
HGX	267 ANS	NS	NHGZZZZ	201	Maint St Common Misc Equip-Pred	907.15	0	0	0	0	0
HGX	268 ANS	NS	NHGZZZZ	201	Maint St Common Misc Equip-Corr	5,807.82	1,377.45	0	0	0	0
HGX	268 D24	NS	NHGZZZZ	201	Maint St Common Misc Equip-Corr	141.46	285.98	0	0	0	0
HGX	268 D26	NS	NHGZZZZ	201	Maint St Common Misc Equip-Corr	141.47	285.98	0	0	0	0
HGX	268 P03	NE	NHGZZZZ	201	Maint St Common Misc Equip-Corr	0	0	11,641.36	799.29	0	0
HGX	268 P03	NS	NHGZZZZ	201	Maint St Common Misc Equip-Corr	35,685.00	0	0	0	0	0
HGX	271 A01	NE	NHGZZZZ	201	Maint Fuel Feed System-Corrective	328,794.14	0	0	0	0	0
HGX	271 A15	NS	NHGZZZZ	201	Maint Fuel Feed System-Corrective	2,672.00	0	0	0	0	0
HGX	271 D24	NS	NHGZZZZ	201	Maint Fuel Feed System-Corrective	3,489.50	0	0	0	0	0
HGX	271 D25	NS	NHGZZZZ	201	Maint Fuel Feed System-Corrective	2,199.56	0	0	0	0	0
HGX	271 D26	NS	NHGZZZZ	201	Maint Fuel Feed System-Corrective	2,468.31	0	0	0	0	0
HGX	271 D27	NS	NHGZZZZ	201	Maint Fuel Feed System-Corrective	2,199.54	0	0	0	0	0
HGX	271 P03	NE	NHGZZZZ	201	Maint Fuel Feed System-Corrective	0	0	19,519.64	183.83	0	0
HGX	272 A01	NE	NHGZZZZ	201	Maint Combust Turbine & Elec Eq-I	1,215.33	10,296.56	47,838.77	0	0	0
HGX	272 A01	NS	NHGZZZZ	201	Maint Combust Turbine & Elec Eq-I	0	22,082.43	0	0	0	0
HGX	272 P03	NE	NHGZZZZ	201	Maint Combust Turbine & Elec Eq-I	6,835.71	49,089.12	17,324.23	0	0	0
HGX	272 P03	NS	NHGZZZZ	201	Maint Combust Turbine & Elec Eq-I	1,273.87	0	0	0	0	0
HGX	273 P03	NE	NHGZZZZ	201	Maint Combust Turbine & Elec Eq-I	174.12	0	0	0	0	0

CA-SIR-10
DOCKET NO. 05-0315
ATTACHMENT 1
PAGE 10 OF 11
(UPDATED 2/9/07)

Source: Pillar Control file dtd 01/29/07

RA	Act Loc	Ind	Proj	EE	Activity	FY06 Actual	FY05 Actual	FY04 Actual	FY03 Actual	FY02 Actual	FY01 Actual
HGX	274 A01	NE	NHGZZZZ	201	Maint Combust Turbine & Elec Eq-(	0	938.35	0	5.21	0	0
HGX	274 ANS	NE	NHGZZZZ	201	Maint Combust Turbine & Elec Eq-(	12,265.64	0	0	0	0	0
HGX	274 P03	NE	NHGZZZZ	201	Maint Combust Turbine & Elec Eq-(	32,374.09	74,054.01	71,770.48	4,204.73	0	0
HGX	274 P03	NS	NHGZZZZ	201	Maint Combust Turbine & Elec Eq-(	1,568.90	1,179.65	0	0	0	0
HGX	275 A11	NE	NHGZZZZ	201	Maint Int Combust Eng & Rel Eq-Pı	0	560.92	0	0	0	0
HGX	275 A15	NE	NHGZZZZ	201	Maint Int Combust Eng & Rel Eq-Pı	1,611.71	377.79	0	0	0	0
HGX	275 A16	NE	NHGZZZZ	201	Maint Int Combust Eng & Rel Eq-Pı	410.98	0	0	0	0	0
HGX	275 A17	NE	NHGZZZZ	201	Maint Int Combust Eng & Rel Eq-Pı	410.98	331.08	0	0	0	0
HGX	275 ANS	NE	NHGZZZZ	201	Maint Int Combust Eng & Rel Eq-Pı	669.78	66.03	0	0	0	0
HGX	275 B12	NE	NHGZZZZ	201	Maint Int Combust Eng & Rel Eq-Pı	739.46	0	0	0	0	0
HGX	275 B13	NE	NHGZZZZ	201	Maint Int Combust Eng & Rel Eq-Pı	406.66	149.24	0	0	0	0
HGX	275 B14	NE	NHGZZZZ	201	Maint Int Combust Eng & Rel Eq-Pı	419.77	4,942.27	0	0	0	0
HGX	275 BNS	NE	NHGZZZZ	201	Maint Int Combust Eng & Rel Eq-Pı	669.78	66.03	0	0	0	0
HGX	275 C21	NE	NHGZZZZ	201	Maint Int Combust Eng & Rel Eq-Pı	0	0	3,184.50	0	0	0
HGX	275 C22	NE	NHGZZZZ	201	Maint Int Combust Eng & Rel Eq-Pı	0	1,169.09	3,184.51	0	0	0
HGX	275 D24	NE	NHGZZZZ	201	Maint Int Combust Eng & Rel Eq-Pı	898.77	372.66	0	0	0	0
HGX	275 D26	NE	NHGZZZZ	201	Maint Int Combust Eng & Rel Eq-Pı	898.78	712.36	0	0	0	0
HGX	276 ANS	NE	NHGZZZZ	201	Maint Int Combust Eng & Rel Eq-Pı	68.51	(193,643.78)	193,706.09	0	0	0
HGX	276 B12	NE	NHGZZZZ	201	Maint Int Combust Eng & Rel Eq-Pı	68.50	0	0	0	0	0
HGX	276 B14	NE	NHGZZZZ	201	Maint Int Combust Eng & Rel Eq-Pı	0	776.43	0	0	0	0
HGX	277 A01	NE	NHGZZZZ	201	Maint Int Combust Eng & Rel Eq-C	0	0	755.85	0	0	0
HGX	277 A11	NE	NHGZZZZ	201	Maint Int Combust Eng & Rel Eq-C	0	0	0	4,574.93	0	0
HGX	277 A15	NE	NHGZZZZ	201	Maint Int Combust Eng & Rel Eq-C	6,838.64	305.56	18,061.25	2,081.34	0	0
HGX	277 A16	NE	NHGZZZZ	201	Maint Int Combust Eng & Rel Eq-C	19,422.60	44,331.37	18,061.25	2,081.34	0	0
HGX	277 A17	NE	NHGZZZZ	201	Maint Int Combust Eng & Rel Eq-C	2,040.78	1,092.37	18,777.59	2,081.29	0	0
HGX	277 ANS	NE	NHGZZZZ	201	Maint Int Combust Eng & Rel Eq-C	4,038.59	0.57	3,514.21	579.13	0	0
HGX	277 B12	NE	NHGZZZZ	201	Maint Int Combust Eng & Rel Eq-C	2,389.72	187.27	17,806.87	1,958.90	0	0
HGX	277 B13	NE	NHGZZZZ	201	Maint Int Combust Eng & Rel Eq-C	3,799.77	176.25	17,001.45	1,958.90	0	0
HGX	277 B14	NE	NHGZZZZ	201	Maint Int Combust Eng & Rel Eq-C	5,822.80	176.25	18,533.82	2,081.34	0	0
HGX	277 BNS	NE	NHGZZZZ	201	Maint Int Combust Eng & Rel Eq-C	1,486.82	0.57	1,676.30	86.39	0	0
HGX	277 D24	NE	NHGZZZZ	201	Maint Int Combust Eng & Rel Eq-C	0	0	579.03	0	0	0
HGX	277 D25	NE	NHGZZZZ	201	Maint Int Combust Eng & Rel Eq-C	0	0	10.42	0	0	0
HGX	277 D26	NE	NHGZZZZ	201	Maint Int Combust Eng & Rel Eq-C	0	350.43	487.41	0	0	0
HGX	277 D27	NE	NHGZZZZ	201	Maint Int Combust Eng & Rel Eq-C	0	0	10.41	0	0	0
HGX	789 ANS	NS	NHGZZZZ	201	Attend Training	7.00	0	0	0	0	0
HGX	877 D26	NE	NHGZZZZ	201	Comply Ongoing-Solid & Haz Wast	0	636.64	0	0	0	0
HGX				201		628,536.34	178,400.55	723,173.23	106,933.82	0	0
GRAND TOTAL				201		1,875,089.66	1,520,447.42	2,553,267.13	1,528,893.29	1,287,317.00	1,075,862.71

CA-SIR-10
DOCKET NO. 05-0315
ATTACHMENT 1
PAGE 11 OF 11
(UPDATED 2/9/07)

CA-SIR-10

Ref: HELCO Response to CA-IR-336, page 3 (Production EE 201 Miscellaneous Materials).

Please provide the following updated information through December 31, 2006 when available.

a. Actual per books EE 201 expenditures by RA through December 31, 2006, to replace the data table provided through October when data is available.

b. Identify, describe and quantify any known abnormal, non-recurring or otherwise not representative transactions within your response to part a of this information request.

c. Update the CA-IR-2 T-5, Attachment 2A, pages 9-21 spreadsheet of actual annual historical EE 201 spending, adding a column with calendar year 2006 actual data to the amounts already shown for the years 1999 through 2005, when data is available.

HELCO Response:

a. 2006 Actual data through December 31, 2006 is not available at this time and will be provided in late January 2007.

b. 2006 Actual data through December 31, 2006 is not available at this time and will be provided in late January 2007.

c. 2006 Actual data through December 31, 2006 is not available at this time and will be provided in late January 2007.

CA-SIR-11

Ref: HELCO Response to CA-IR-402, Attachment 1 (Production Department Straight time and Overtime Hours).

Please provide an update to Attachment 1, adding actual 2006 Overtime and Straight time hours and percentages by RA through December 31, 2006, when available.

HELCO Response:

See Attachment 1 for the 2006 recorded overtime and straight time hours and percentage data by RA. The 2006 data are preliminary. Although the Company does not anticipate that these amounts will change, they will not be considered final until the Company issues its financial statements to the Securities and Exchange Commission, currently scheduled for February 28, 2007. Should any of the enclosed amounts change, the Company will provide the revisions as soon as practicable.

Hawaii Electric Light Company Inc.
Rate Case - Test Year 2006
Labor Overtime
(Revised CA-IR-402, Attachment 1)

RA	RA Desc	Overtime Hours	Straight Time Hours	Total ST+OT Hours	Proportion OT/ST Hrs %
2003 Actual					
HGA	Admin-Prod O&M	3,073	21,300	24,373	14%
HGT	Technical	129	7,640	7,769	2%
HGC	Keahole Stn Oper	801	4,028	4,829	20%
HGH	Hill Stn Oper	12,915	44,516	57,432	29%
HGP	Puna Stn Oper	8,655	23,952	32,607	36%
HGW	Shipman Stn Oper			0	0%
HGK	Keahole Stn Maint	2,467	6,832	9,299	36%
HGM	St/Hy Maint	11,519	37,547	49,066	31%
HGX	CT&D Hilo Maint	2,904	6,720	9,624	43%
TOTAL		42,463	152,535	194,998	28%
2004 Actual					
HGA	Admin-Prod O&M	4,940	23,523	28,462	21%
HGT	Technical	397	7,947	8,344	5%
HGC	Keahole Stn Oper	4,541	9,267	13,807	49%
HGH	Hill Stn Oper	15,839	46,587	62,426	34%
HGP	Puna Stn Oper	7,288	18,687	25,975	39%
HGW	Shipman Stn Oper			0	0%
HGK	Keahole Stn Maint	4,287	8,749	13,036	49%
HGM	St/Hy Maint	7,415	33,702	41,117	22%
HGX	CT&D Hilo Maint	3,791	11,149	14,939	34%
TOTAL		48,497	159,609	208,106	30%
2005 Actual					
HGA	Admin-Prod O&M	2,982	25,539	28,521	12%
HGT	Technical	6	8,403	8,409	0%
HGC	Keahole Stn Oper	5,200	12,909	18,110	40%
HGH	Hill Stn Oper	12,197	45,617	57,814	27%
HGP	Puna Stn Oper	6,882	20,474	27,356	34%
HGW	Shipman Stn Oper			0	0%
HGK	Keahole Stn Maint	5,456	11,399	16,855	48%
HGM	St/Hy Maint	5,443	33,635	39,078	16%
HGX	CT&D Hilo Maint	3,210	13,513	16,723	24%
TOTAL		41,376	171,489	212,865	24%

Hawaii Electric Light Company Inc.
Rate Case - Test Year 2006

Labor Overtime

(Revised CA-IR-402, Attachment 1)

RA	RA Desc	Overtime Hours	Straight Time Hours	Total ST+OT Hours	Proportion OT/ST Hrs %
2006 Budget (Originally Submitted)					
HGA	Admin-Prod O&M	5,370	27,040	32,410	20%
HGT	Technical	525	10,400	10,925	5%
HGC	Keahole Stn Oper	5,840	16,640	22,480	35%
HGH	Hill Stn Oper	15,580	49,920	65,500	31%
HGP	Puna Stn Oper	7,000	20,800	27,800	34%
HGW	Shipman Stn Oper	5,600	16,640	22,240	34%
HGK	Keahole Stn Maint	6,200	16,640	22,840	37%
HGM	St/Hy Maint	9,940	37,440	47,380	27%
HGX	CT&D Hilo Maint	6,080	16,640	22,720	37%
TOTAL		62,135	212,160	274,295	29%

2006 Budget - Breakdown of Straight Time Hours

		Non-Project	*Project*	*Total*
HGA	Admin-Prod O&M	26,100	940	27,040
HGT	Technical	10,116	284	10,400
HGC	Keahole Stn Oper	16,640		16,640
HGH	Hill Stn Oper	49,920		49,920
HGP	Puna Stn Oper	20,480	320	20,800
HGW	Shipman Stn Oper	16,640		16,640
HGK	Keahole Stn Maint	13,760	2,880	16,640
HGM	St/Hy Maint	25,664	11,776	37,440
HGX	CT&D Hilo Maint	15,008	1,632	16,640
TOTAL		194,328	17,832	212,160

Note: 2006 budget hours ties with labor input sheets. Since the labor expenses were not reclassified, hours shown on this Attachment for HGH (Hill Plant) and HGW (Shipman Plant) were not adjusted for the transfer of one operator position (660 OT hours plus 2,080 ST hour = 2,740 hours) from HGH (Hill Plant) to HGW (Shipman Plant).

Hawaii Electric Light Company Inc.
Rate Case - Test Year 2006

Labor Overtime

(Revised CA-IR-402, Attachment 1)

CA-SIR-11
DOCKET 05-0315
ATTACHMENT 1
PAGE 3 OF 3
(UPDATED 2/6/07)

RA	RA Desc	Overtime Hours	Straight Time Hours	Total ST+OT Hours	Proportion OT/ST Hrs %
2006 Budget (Adjusted for CA-IR-447)					
HGA	Admin-Prod O&M	5,370	26,912	32,282	20%
HGT	Technical (1)	400	8,173	8,573	5%
HGC	Keahole Stn Oper	5,840	16,547	22,387	35%
HGH	Hill Stn Oper	15,580	49,682	65,262	31%
HGP	Puna Stn Oper	7,000	20,676	27,676	34%
HGW	Shipman Stn Oper	5,600	16,541	22,141	34%
HGK	Keahole Stn Maint	6,200	16,562	22,762	37%
HGM	St/Hy Maint	9,940	37,367	47,307	27%
HGX	CT&D Hilo Maint	6,080	16,610	22,690	37%
TOTAL (2)		62,010	209,070	271,080	30%

(1) Note: 2006 hours as originally submitted less the 2,205 hours removed for the HGT Technical Supt .

(2) Note: 2006 hours as originally submitted less the 1,010 hours removed for Safety Training (removed from ST hours).

RA	RA Desc	Overtime Hours	Straight Time Hours	Total ST+OT Hours	Proportion OT/ST Hrs %
2006 Actual					
HGA	Admin-Prod O&M	3,413	25,553	28,967	13%
HGT	Technical	1	7,533	7,534	0%
HGC	Keahole Stn Oper	4,521	14,987	19,507	30%
HGH	Hill Stn Oper	14,512	39,377	53,889	37%
HGP	Puna Stn Oper	7,409	24,707	32,116	30%
HGW	Shipman Stn Oper	4,252	11,916	16,168	36%
HGK	Keahole Stn Maint	3,432	11,807	15,239	29%
HGM	St/Hy Maint	6,791	35,582	42,373	19%
HGX	CT&D Hilo Maint	1,863	14,313	16,177	13%
TOTAL		46,195	185,774	231,969	25%

RA	RA Desc	Overtime Hours	Straight Time Hours	Total ST+OT Hours	Proportion OT/ST Hrs %
2006 Actual over (under) Budget Adjusted for CA-IR-447					
HGA	Admin-Prod O&M	(1,957)	(1,359)	(3,315)	144%
HGT	Technical	(399)	(640)	(1,039)	62%
HGC	Keahole Stn Oper	(1,319)	(1,561)	(2,880)	85%
HGH	Hill Stn Oper	(1,068)	(10,305)	(11,373)	10%
HGP	Puna Stn Oper	409	4,031	4,440	10%
HGW	Shipman Stn Oper	(1,348)	(4,625)	(5,973)	29%
HGK	Keahole Stn Maint	(2,768)	(4,755)	(7,523)	58%
HGM	St/Hy Maint	(3,149)	(1,786)	(4,934)	176%
HGX	CT&D Hilo Maint	(4,217)	(2,297)	(6,514)	184%
TOTAL		(15,815)	(23,296)	(39,111)	68%

CA-SIR-11

Ref: HELCO Response to CA-IR-402, Attachment 1 (Production Department Straight time and Overtime Hours).

Please provide an update to Attachment 1, adding actual 2006 Overtime and Straight time hours and percentages by RA through December 31, 2006, when available.

HELCO Response:

2006 Actual Overtime and Straight time hours and percentage data through December 31, 2006 are not available at this time and will be provided in late January 2007.

CA-SIR-12

Ref: HELCO Response to CA-IR-409, Attachment 1 (Production Labor Hours to Capital).

Please provide an update to Attachment 1, adding actual 2006 total hours, capital hours and the resulting "Capital %" values by RA through December 31, 2006, when available.

HELCO Response:

See Attachment 1 for 2006 recorded total hours, capital hours, O&M hours and resulting capital % values by RA through December 31, 2006. The 2006 data are preliminary. Although the Company does not anticipate that these amounts will change, they will not be considered final until the Company issues its financial statements to the Securities and Exchange Commission, currently scheduled for February 28, 2007. Should any of the enclosed amounts change, the Company will provide the revisions as soon as practicable.

Hawaii Electric Light Company Inc.
Rate Case - Test Year 2006
Capital vs. Expense Labor Hours

(REVISED CA-IR-409, ATTACHMENT 1)

RA	RA Desc	Total Hours	Capital Hours	O&M Hours	Capital %	O&M %
2001 Actual						
HGA	Admin-Prod O&M	27,522		27,522	0.0%	100.0%
HGT	Technical	0		0		
HGC	Keahole Stn Oper	4,386		4,386	0.0%	100.0%
HGH	Hill Stn Oper	56,865		56,865	0.0%	100.0%
HGP	Puna Stn Oper	21,178		21,178	0.0%	100.0%
HGW	Shipman Stn Oper	1,880		1,880	0.0%	100.0%
HGK	Keahole Stn Maint	10,219	286	9,933	2.8%	97.2%
HGM	St/Hy Maint	57,165	4,391	52,774	7.7%	92.3%
HGX	CT&D Hilo Maint	0		0		
TOTAL		179,215	4,677	174,538	2.6%	97.4%
2002 Actual						
HGA	Admin-Prod O&M	28,059	50	28,009	0.2%	99.8%
HGT	Technical	2,349	60	2,289	2.6%	97.4%
HGC	Keahole Stn Oper	4,727		4,727	0.0%	100.0%
HGH	Hill Stn Oper	61,501		61,501	0.0%	100.0%
HGP	Puna Stn Oper	27,547		27,547	0.0%	100.0%
HGW	Shipman Stn Oper	0		0		
HGK	Keahole Stn Maint	9,994	993	9,001	9.9%	90.1%
HGM	St/Hy Maint	58,837	3,663	55,174	6.2%	93.8%
HGX	CT&D Hilo Maint	0		0		
TOTAL		193,014	4,766	188,248	2.5%	97.5%
2003 Actual						
HGA	Admin-Prod O&M	24,373	264	24,109	1.1%	98.9%
HGT	Technical	7,769	608	7,161	7.8%	92.2%
HGC	Keahole Stn Oper	4,829		4,829	0.0%	100.0%
HGH	Hill Stn Oper	57,432	311	57,121	0.5%	99.5%
HGP	Puna Stn Oper	32,607		32,607	0.0%	100.0%
HGW	Shipman Stn Oper	0		0		
HGK	Keahole Stn Maint	9,299		9,299	0.0%	100.0%
HGM	St/Hy Maint	49,066	4,248	44,818	8.7%	91.3%
HGX	CT&D Hilo Maint	9,624	201	9,423	2.1%	97.9%
TOTAL		194,998	5,632	189,366	2.9%	97.1%
2004 Actual						
HGA	Admin-Prod O&M	28,462	2,413	26,049	8.5%	91.5%
HGT	Technical	8,344	1,965	6,379	23.6%	76.4%
HGC	Keahole Stn Oper	13,807	1,447	12,360	10.5%	89.5%
HGH	Hill Stn Oper	62,426	517	61,909	0.8%	99.2%
HGP	Puna Stn Oper	25,975	68	25,907	0.3%	99.7%
HGW	Shipman Stn Oper	0		0		
HGK	Keahole Stn Maint	13,036	2,545	10,491	19.5%	80.5%
HGM	St/Hy Maint	41,117	854	40,263	2.1%	97.9%
HGX	CT&D Hilo Maint	14,939	789	14,150	5.3%	94.7%
TOTAL		208,106	10,598	197,508	5.1%	94.9%

Hawaii Electric Light Company Inc.
Rate Case - Test Year 2006
Capital vs. Expense Labor Hours
(REVISED CA-IR-409, ATTACHMENT 1)

RA	RA Desc	Total Hours	Capital Hours	O&M Hours	Capital %	O&M %
2005 Actual						
HGA	Admin-Prod O&M	28,521	190	28,331	0.7%	99.3%
HGT	Technical	8,409	1,860	6,549	22.1%	77.9%
HGC	Keahole Stn Oper	18,110		18,110	0.0%	100.0%
HGH	Hill Stn Oper	57,814		57,814	0.0%	100.0%
HGP	Puna Stn Oper	27,356		27,356	0.0%	100.0%
HGW	Shipman Stn Oper	0		0		
HGK	Keahole Stn Maint	16,855	2,440	14,415	14.5%	85.5%
HGM	St/Hy Maint	39,078	2,386	36,692	6.1%	93.9%
HGX	CT&D Hilo Maint	16,723	801	15,922	4.8%	95.2%
TOTAL		212,865	7,677	205,188	3.6%	96.4%

RA	RA Desc	Total Hours	Capital Hours	O&M Hours	Capital %	O&M %
2006 Budget with actuals thru 9/06			*(actuals thru 09/06)*			
HGA	Admin-Prod O&M	23,290	336	22,955	1.4%	98.6%
HGT	Technical	5,841	118	5,723	2.0%	98.0%
HGC	Keahole Stn Oper	15,534		15,534	0.0%	100.0%
HGH	Hill Stn Oper	42,889		42,889	0.0%	100.0%
HGP	Puna Stn Oper	27,524		27,524	0.0%	100.0%
HGW	Shipman Stn Oper	11,054		11,054	0.0%	100.0%
HGK	Keahole Stn Maint	12,148	31	12,117	0.3%	99.7%
HGM	St/Hy Maint	34,008	830	33,178	2.4%	97.6%
HGX	CT&D Hilo Maint	13,096	29	13,068	0.2%	99.8%
TOTAL		185,386	1,343	184,043	0.7%	99.3%

Average 2001 - 2005					**3.3%**	**96.7%**

RA	RA Desc	Total Hours	Capital Hours	O&M Hours	Capital %	O&M %
2006 Actual						
HGA	Admin-Prod O&M	28,967	399	28,568	1.4%	98.6%
HGT	Technical	7,534	170	7,365	2.2%	97.8%
HGC	Keahole Stn Oper	19,507		19,507	0.0%	100.0%
HGH	Hill Stn Oper	53,889	35	53,854	0.1%	99.9%
HGP	Puna Stn Oper	32,116		32,116	0.0%	100.0%
HGW	Shipman Stn Oper	16,168		16,168	0.0%	100.0%
HGK	Keahole Stn Maint	15,239	39	15,200	0.3%	99.7%
HGM	St/Hy Maint	42,373	1,729	40,643	4.1%	95.9%
HGX	CT&D Hilo Maint	16,177	29	16,148	0.2%	99.8%
TOTAL		231,969	2,400	229,569	1.0%	99.0%

CA-SIR-12

Ref: HELCO Response to CA-IR-409, Attachment 1 (Production Labor Hours to Capital).

Please provide an update to Attachment 1, adding actual 2006 total hours, capital hours and the resulting "Capital %" values by RA through December 31, 2006, when available.

HELCO Response:

2006 Actual data through December 31, 2006 is not available at this time and will be provided in late January 2007.

CA-SIR-13

Ref: HELCO Response to CA-IR-405 (Overtime Hours by RA).

According to the response, "RA's HGC, HGH, HGK and HGP are on track for meeting their respective estimates." Please provide the following information.

a. Actual total overtime hours for calendar 2006 for HGC, HGH, HGK and HGP, when available.

b. Explanations of any remaining significant differences between projected overtime hours and actual calendar 2006 hours, given the response to part (a) of this information request.

c. Actual total overtime hours for calendar 2006 for HGM, HGW and HGX, with comparisons to test year estimated hours for each RA.

d. Explanations of any remaining significant differences between projected overtime hours and actual calendar 2006 hours, given the response to part (c) of this information request.

HELCO Response:

a. See Attachment 1 of HELCO's response to CA-SIR-11 for the 2006 recorded total overtime hours for HGC (Keahole Plant Operations), HGH (Hill Plant Operations), HGK (Keahole Plant Maintenance) and HGP (Puna Plant Operations). The 2006 data are preliminary. Although the Company does not anticipate that these amounts will change, they will not be considered final until the Company issues its financial statements to the Securities and Exchange Commission, currently scheduled for February 28, 2007. Should any of the amounts change, the Company will provide the revisions as soon as practicable.

b. Given the response to part (a) of this information request:

- HGC differences between projected overtime hours and actual calendar 2006 hours (-1,319) is a result of the CT Operator vacancies during the year. This was mainly due to inter-departmental transfers.
- HGH differences between projected overtime hours and actual calendar 2006 hours

(-1,068) is a result of the transfer of one operator position from HGH to HGW (Shipman Plant Operations), and the transfer of a CT operator position from HGH to HGP.

- HGK differences between projected overtime hours and actual calendar 2006 hours (-2,768) is mainly due to the two vacancies – Supervisor and mechanic, the hiring of temporary labor (who was assigned work that would have been done on overtime) and the use of outside services to perform in-house type work. HELCO has one mechanic (temporary hire) in this RA and incurred $137,056 of outside services – temporary hire expense in calendar year 2006.
- HGP difference between projected overtime hours and actual calendar 2006 hours (+409) is a result of the transfer of a CT operator position from HGH to HGP.

c. Refer to Attachment 1 of HELCO's response to CA-SIR-11 for calendar 2006 recorded OT hours for HGM, HGW and HGX, with comparisons to the test year estimated OT hours for each respective RA.

d. Given the response to part (c) of this information request:

- HGM differences between projected overtime hours and actual calendar 2006 hours (-3,149) is mainly due to the hiring of temporary labor (who was assigned work that would have been done on overtime) and the use of outside services to perform in-house type work. HELCO has one mechanic (temporary hire) in this RA and incurred $265,497 of outside services – temporary hire expense in calendar year 2006.
- HGW differences between projected overtime hours and actual calendar 2006 hours (-1,348) is mainly due to the manning of Shipman plant not occurring until April 2006.
- HGX differences between projected overtime hours and actual calendar 2006 hours (-4,217) is mainly due to the retirement of a Working Foreman in April, the retirement

and non-filling of an electrician in July, the non filling of the Supervisor position until July, the hiring of temporary labor (who was assigned work that would have been done on overtime) and the use of outside services to perform in-house type work. HELCO has one mechanic (temporary hire) in this RA and incurred $122,710 of outside services-temporary hire expense in calendar year 2006.

CA-SIR-13

Ref: HELCO Response to CA-IR-405 (Overtime Hours by RA).

According to the response, "RA's HGC, HGH, HGK and HGP are on track for meeting their respective estimates." Please provide the following information.

a. Actual total overtime hours for calendar 2006 for HGC, HGH, HGK and HGP, when available.

b. Explanations of any remaining significant differences between projected overtime hours and actual calendar 2006 hours, given the response to part (a) of this information request.

c. Actual total overtime hours for calendar 2006 for HGM, HGW and HGX, with comparisons to test year estimated hours for each RA.

d. Explanations of any remaining significant differences between projected overtime hours and actual calendar 2006 hours, given the response to part (c) of this information request.

HELCO Response:

a. Refer to CA-SIR-11 for total overtime hours for calendar 2006 for HGC, HGH, HGK and HGP. Actual data through December 31, 2006 is not available at this time and will be provided in late January 2007.

b. The requested explanations will be provided in late January 2007 with the actual calendar year 2006 data.

c. Refer to CA-SIR-11 for calendar 2006 for HGM, HGW and HGX, with comparisons to test year estimated hours for each RA. Actual data through December 31, 2006 is not available at this time and will be provided in late January 2007.

d. See response to subpart b.

CA-SIR-14

Ref: HELCO Response to CA-IR-408 page 2 (Overtime).

According to the response, "In contrast to callout overtime, some overtime is forecast as workloads that are in excess of what can be accomplished by existing maintenance staff and this type of forecast overtime can be offset by additional staffing. In this case the amount of overtime forecast is reduced on a one-for-one basis." Please provide the following information.

a. Please provide the estimated number of hours of overtime other than "callout overtime" that have been incurred in each of the prior years 2003 through 2006 by production department RA, if available.

b. Given the response to part (a) of this information request, explain how many hours of overtime in the test year forecast for each RA have been "offset by additional staffing" and "reduced on a one-for-one basis" in relation to planned staffing additions in the production department.

c. The response to CA-IR-404, part b, states that overtime was estimated using historical data that is rounded up to be "conservative in terms of the effect on net income." Please explain how this historical approach provides for any opportunity to capture overtime that should be "offset by additional staffing" and "reduced on a one-for-one basis" in relation to planned staffing additions in the production department.

HELCO Response:

CA-IR-408 subpart (a) states that "HELCO's evaluation consisted of applying the available productive hours of additional staffing against the number of forecast overtime hours. The amount of forecasted overtime hours was based on historical data." Historical data is the basis for HELCO's overtime forecast, as described in response to CA-IR-408. Subpart (a) further states that , "In contrast to callout overtime, some overtime is forecast as workloads that are in excess of what can be accomplished by existing maintenance staff and this type of forecast overtime can be offset by additional staffing. In this case the amount of overtime forecast is reduced on a one-for-one basis. Adding staff, however, could indirectly result in some reduction to callout overtime as more emphasis is placed on predictive and preventative work rather than

corrective, emergency work, but this is not easily quantifiable." This describes "theoretically" what occurs to the different types of overtime, while the budget is based on historical overtime. The statements were not intended to suggest that HELCO forecasts two types of overtime (call out and scheduled) and compares the types of overtime forecast to the types of overtime that are actually recorded. Also, there is no HELCO report that exists which shows how many hours of overtime in the test year forecast for each RA have been "offset by additional staffing" and "reduced on a one-for-one basis" in relation to planned staffing additions in the Production Department.

a. See Attachment 1 for the recorded overtime hours other than "callout overtime" that were incurred in 2003 through 2006. The recorded 2006 data are preliminary. Although the Company does not anticipate that these hours will change, they will not be considered final until the Company issues its financial statements to the Securities and Exchange Commission, currently scheduled for February 28, 2007. Should any of the hours change, the Company will provide the revisions as soon as practicable.

Although Attachment 1 shows the actual overtime being less than what was forecasted, the focus should be on Attachment 2. Attachment 2 is a report that shows 2006 actual labor and outside services -temporary hire dollars spent compared to the adjusted TY 2006 budget. As described in the HELCO T-5 testimony, in exhibits HELCO-536, 537, 538, 539 and 543, as well as in responses to CA-IR-1, CA-IR-2, CA-IR-61, CA-IR-62, CA-IR-68, CA-IR-69, CA-IR-71, CA-IR-74, CA-IR-405, CA-IR-407 and CA-IR-408, staffing is based on specific needs, and labor hours are based on staffing and historical overtime. When comparing actual 2006 direct labor (EE: 150, 151, 421) and 503 (O/S Temp Hire) to the Test Year revised budget for the same, the recorded 2006 expense is $184,986 less than

budget. This translates to about a 2% difference, which is close to budget.

b. See discussion above.

c. See discussion above.

Hawaii Electric Light Company Inc.
Rate Case - Test Year 2006
Actual Overtime Hours by RA

RA	RA Desc	Actual 2003	2004	2005	2006
Callout Overtime					
HGA	Admin-Prod O&M	0	0	0	0
HGT	Technical	0	0	0	0
HGC	Keahole Stn Oper	508	2,677	2,354	1,744
HGH	Hill Stn Oper	8,728	9,641	7,121	9,439
HGP	Puna Stn Oper	5,823	4,729	4,392	4,861
HGW	Shipman Stn Oper	0	0	0	2,764
HGK	Keahole Stn Maint	52	168	45	68
HGM	St/Hy Maint	489	371	233	316
HGX	CT&D Hilo Maint	62	205	89	81
TOTAL		15,661	17,790	14,234	19,271
Total Overtime					
HGA	Admin-Prod O&M	3,073	4,940	2,982	3,413
HGT	Technical	129	397	6	1
HGC	Keahole Stn Oper	801	4,541	5,200	4,521
HGH	Hill Stn Oper	12,915	15,839	12,197	14,512
HGP	Puna Stn Oper	8,655	7,288	6,882	7,409
HGW	Shipman Stn Oper	0	0	0	4,252
HGK	Keahole Stn Maint	2,467	4,287	5,456	3,432
HGM	St/Hy Maint	11,519	7,415	5,443	6,791
HGX	CT&D Hilo Maint	2,904	3,791	3,210	1,863
TOTAL		42,463	48,498	41,376	46,195
Overtime other than Callout Overtime					
HGA	Admin-Prod O&M	3,073	4,940	2,982	3,413
HGT	Technical	129	397	6	1
HGC	Keahole Stn Oper	294	1,864	2,846	2,777
HGH	Hill Stn Oper	4,187	6,198	5,076	5,073
HGP	Puna Stn Oper	2,832	2,559	2,490	2,548
HGW	Shipman Stn Oper	0	0	0	1,489
HGK	Keahole Stn Maint	2,416	4,120	5,411	3,365
HGM	St/Hy Maint	11,031	7,044	5,210	6,475
HGX	CT&D Hilo Maint	2,842	3,586	3,122	1,783
TOTAL		26,802	30,708	27,142	26,924

Hawaii Electric Light Company Inc.
Rate Case - Test Year 2006
Actual Labor and Temporary Hire Dollars vs. Adjusted TY Budget

	Actual 2006 YTD	TY 2006 Operating Budget	2006 YTD BudVar
Labor (EE 150,155,421)	8,172,367.49	9,282,876.63	(1,110,509.14)
Outside Services - Temp Hire (EE 503)	532,822.76	-	532,822.76
Total	8,705,190.25	9,282,876.63	(577,686.38)
Adjustment - Technical Supt. (refer to CA-IR-447 (T-5) Att 1, p.2		(89,400.00)	89,400.00
Adjustment - Projected Capital Hours (refer to CA-IR-447 (T-5) Att 1, p.2		(303,300.00)	303,300.00
Adjusted Grand Total	8,705,190.25	8,890,176.63	(184,986.38)

Hawaii Electric Light Company Inc.
Rate Case - Test Year 2006
Actual Labor and Temp Hire Dollars

Sum of 2006rec		
acct blk	ee	Total
B30	150	4,555,273.50
	155	256,191.13
	421	526,483.58
B30 Total		5,337,948.21
B31	150	2,356,137.03
	155	205,610.94
	421	272,671.31
B31 Total		2,834,419.28
Labor Actual		8,172,367.49

Non-Labor Actual	532,822.76	Temp Hire
Grand Total Actual	8,705,190.25	

Hawaii Electric Light Company Inc.
Rate Case - Test Year 2006
Actual Outside Services - Temporary Hire Dollars

Sum of 2006rec		
acct blk	ee	Total
B30	503	-
B30 Total		-
B31	503	532,822.76
B31 Total		532,822.76
Non Labor Actual		532,822.76

Hawaii Electric Light Company Inc.
Rate Case - Test Year 2006
Labor Dollars Budget

Sum of 2006fct		
GL_CODE	ee	Total
B30	150	5,409,782
	155	-
	421	644,471
B30 Total		6,054,253
B31	150	2,885,548
	155	-
	421	343,076
B31 Total		3,228,624
Labor Budget		9,282,877

Non-Labor Budget	-
Grand Total Budget	9,282,876.63

Hawaii Electric Light Company Inc.
Rate Case - Test Year 2006
Outside Services - Temporary Hire Budget Dollars

Sum of 2006fct		
GL_CODE	ee	Total
Production Operations	503	-
Production Operations Total		-
Production Maintenance	503	-
Production Maintenance Total		-
Non-labor Budget		-

CA-SIR-14

Ref: HELCO Response to CA-IR-408 page 2 (Overtime).

According to the response, "In contrast to callout overtime, some overtime is forecast as workloads that are in excess of what can be accomplished by existing maintenance staff and this type of forecast overtime can be offset by additional staffing. In this case the amount of overtime forecast is reduced on a one-for-one basis." Please provide the following information.

a. Please provide the estimated number of hours of overtime other than "callout overtime" that have been incurred in each of the prior years 2003 through 2006 by production department RA, if available.

b. Given the response to part (a) of this information request, explain how many hours of overtime in the test year forecast for each RA have been "offset by additional staffing" and "reduced on a one-for-one basis" in relation to planned staffing additions in the production department.

c. The response to CA-IR-404, part b, states that overtime was estimated using historical data that is rounded up to be "conservative in terms of the effect on net income." Please explain how this historical approach provides for any opportunity to capture overtime that should be "offset by additional staffing" and "reduced on a one-for-one basis" in relation to planned staffing additions in the production department.

HELCO Response:

a. Calendar 2006 information is not available at this time and will be provided in late January 2007.

b. Response will be provided with subpart a. in late January 2007.

c. Response will be provided with subparts a. and b. in late January 2007.

CA-SIR-15

Ref: HELCO Response to CA-IR-408 page 2 (Overtime).

According to the response, "Adding staff, however, could indirectly result in some reduction to callout overtime as more emphasis is placed on predictive and preventative work rather than corrective, emergency work, but this is not easily quantifiable." Please provide the following information.

a. Please provide the estimated number of hours of "callout overtime" that have been incurred in each of the prior years 2003 through 2006, by production department RA, if available.

b. Given the response to part (a) of this information request, explain how many hours of "callout overtime" in the test year forecast for each RA have been reduced "indirectly" to account for planned staffing additions in the production department.

c. The response to CA-IR-404, part b, states that overtime was estimated using historical data that is rounded up to be "conservative in terms of the effect on net income." Please explain how this historical approach provides for any opportunity to capture callout overtime that should be reduced indirectly by additional staffing due to planned staffing additions in the production department.

HELCO Response:

a. See Attachment 1 of HELCO's response to CA-SIR-14 for recorded "callout overtime" hours incurred in 2003 through 2006. The recorded 2006 data are preliminary. Although the Company does not anticipate that these hours will change, they will not be considered final until the Company issues its financial statements to the Securities and Exchange Commission, currently scheduled for February 28, 2007. Should any of the hours change, the Company will provide the revisions as soon as practicable.

b. See response to CA-SIR-14.

c. See response to CA-SIR-14.

CA-SIR-15

Ref: HELCO Response to CA-IR-408 page 2 (Overtime).

According to the response, "Adding staff, however, could indirectly result in some reduction to callout overtime as more emphasis is placed on predictive and preventative work rather than corrective, emergency work, but this is not easily quantifiable." Please provide the following information.

a. Please provide the estimated number of hours of "callout overtime" that have been incurred in each of the prior years 2003 through 2006, by production department RA, if available.

b. Given the response to part (a) of this information request, explain how many hours of "callout overtime" in the test year forecast for each RA have been reduced "indirectly" to account for planned staffing additions in the production department.

c. The response to CA-IR-404, part b, states that overtime was estimated using historical data that is rounded up to be "conservative in terms of the effect on net income." Please explain how this historical approach provides for any opportunity to capture callout overtime that should be reduced indirectly by additional staffing due to planned staffing additions in the production department.

HELCO Response:

a. Calendar 2006 information is not available at this time and will be provided in late January 2007.

b. Response to be provided with subpart a. in late January 2007.

c. Response to be provided with subparts a. and b. in late January 2007.

CA-SIR-16

Ref: HELCO Response to CA-IR-331 Attachment 1 (CEMS).

a. Please provide an update of Attachment 1 through December 2006, when available.

b. Provide a detailed explanation and copies of supporting documentation for the $176,718 charged in February 2006, indicating all reasons why/if such activities are believed to normal and ongoing.

HELCO Response:

a. See Attachment 1 for recorded CEMS expense through December 31, 2006. The 2006 data are preliminary. Although the Company does not anticipate that these amounts will change, they will not be considered final until the Company issues its financial statements to the Securities and Exchange Commission, currently scheduled for February 28, 2007. Should the 2006 amounts change, the Company will provide the revisions as soon as practicable.

b. See Attachment 2 of this CA-SIR response for support documentation for the $176,718. Attachment 2 shows copies of purchase requisitions for December 2005 ($167,567.35) and January 2006 ($9,151.14). These requisitions were paid in February 2006 and included annual performance source testings of CT-3, CT-4, CT-5 and Keahole diesels. This is in addition to the monthly maintenance of the CEMS systems. With the addition of CT-4 and CT-5, such activities are normal and ongoing to maintain compliance with the units' covered source permits.

Hawaii Electric Light Company Inc.

2006 TEST YEAR
2003 - 2006 Year-to-Date Monthly Billed Amounts for CEMS (thru 12/31/2006)

Source: Pillar Actuals **(UPDATED CA-IR-331, ATTACHMENT 1)**

Month-Yr	Jan 03 Actual	Feb 03 Actual	Mar 03 Actual	Apr 03 Actual	May 03 Actual	Jun 03 Actual	Jul 03 Actual	Aug 03 Actual	Sep 03 Actual	Oct 03 Actual	Nov 03 Actual	Dec 03 Actual	FY03 Actual
Amount	$ (11,206)	$ 6,896	$ 8,525	$ 7,940	$ 8,314	$ 6,765	$ 11,217	$ 46,547	$ 5,487	$ 6,485	$ 8,729	$ 6,671	$ 112,369

Month-Yr	Jan 04 Actual	Feb 04 Actual	Mar 04 Actual	Apr 04 Actual	May 04 Actual	Jun 04 Actual	Jul 04 Actual	Aug 04 Actual	Sep 04 Actual	Oct 04 Actual	Nov 04 Actual	Dec 04 Actual	FY04 Actual
Amount	$ 17,963	$ 5,190	$ 5,517	$ 4,480	$ 5,629	$ 8,003	$ 4,465	$ 3,946	$ 6,484	$ 4,681	$ 12,403	$ 10,242	$ 89,005

Month-Yr	Jan 05 Actual	Feb 05 Actual	Mar 05 Actual	Apr 05 Actual	May 05 Actual	Jun 05 Actual	Jul 05 Actual	Aug 05 Actual	Sep 05 Actual	Oct 05 Actual	Nov 05 Actual	Dec 05 Actual	FY05 Actual
Amount	$ 8,470	$ 8,491	$ 8,857	$ 17,112	$ 15,199	$ 8,634	$ 46,358	$ 86,000	$ 12,081	$ 11,124	$ 2,906	$ 8,113	$ 233,346

Month-Yr	Jan 06 Actual	Feb 06 Actual	Mar 06 Actual	Apr 06 Actual	May 06 Actual	Jun 06 Actual	Jul 06 Actual	Aug 06 Actual	Sep 06 Actual	Oct 06 Actual	Nov 06 Actual	Dec 06 Actual	FY06 Actual
Amount	$ -	$ 176,718	$ 11,494	$ 14,077	$ 11,993	$ 59,967	$ -	$ 44,782	$ 29,455	$ 15,512	$ 14,189	$ 245,390	$ 623,578

CA-SIR-16
DOCKET NO. 05-0315
ATTACHMENT 1
PAGE 1 OF 1
(UPDATED 2/6/07)

Review Purchase Requisition Item (HAWAII ELECTRIC LIGHT CO., INC.)

File Edit Tools Help

OK | Revert

Requisition No.: 033553 Item No.: 001 Type: S Service Order

Delivery District: HELC

Proforma Number: Requisition Tag:

Order Number: H35533 001 Order Date: 1/22/2006 Due Date: 1/23/2006

Order Status: Complete Place Date: 1/30/2006

Item Description: CEMS MAINTENANCE FOR DECEMBER 2005.

Item | Purchasing Terms | Payment

Quantity: UOM: NA

Estimated Price: 167567.3500

Mnemonic: Part No:

Description: CEMS MAINTENANCE FOR DECEMBER 2005.
ALSO, SOURCE TESTING OF CT3, CT4,
CT5 AND THE KEAHOLE DIESELS.

Action:

MSM23GB

Date Printed	27 December 2006 11:03:27
Ellipse Userid	kklein
Program Name	msq000.exe
Program Description	Review Purchase Requisition Item (HAWAII ELECTRIC LIGHT CO., INC.)
Version	001A
Revision	104 $ Date: 06-10-24 11:15 $
Module	3001
Product Version	5.2.3.2
File Version	5.23.212.1
Location	D:\PROGRA~1\Mincom\MIMSOP~1\523~1.2\Bin\
Compiled Date	24 October 2006 11:15
Form Name	MSM23GB

Review Purchase Requisition Item (HAWAII ELECTRIC LIGHT CO., INC.)

File Edit Tools Help

OK | Revert

Requisition No.: 033925 Item No.: 001 Type: S Service Order

Delivery District: HELC

Proforma Number: Requisition Tag:

Order Number: H35758 001 Order Date: 2/9/2006 Due Date: 2/10/2006

Order Status: Complete Place Date: 2/10/2006

Item Description: CEMS MAINTENANCE FOR JAN. 2006

Item | Purchasing Terms | Payment

Quantity: UOM: NA

Estimated Price: 9151.1400

Mnemonic: Part No:

Description: CEMS MAINTENANCE FOR JAN. 2006

Action:

MSM23GB

Date Printed	27 December 2006 11:03:47
Ellipse Userid	kklein
Program Name	msq000.exe
Program Description	Review Purchase Requisition Item (HAWAII ELECTRIC LIGHT CO., INC.)
Version	001A
Revision	104 $ Date: 06-10-24 11:15 $
Module	3001
Product Version	5.2.3.2
File Version	5.23.212.1
Location	D:\PROGRA~1\Mincom\MIMSOP~1\523~1.2\Bin\
Compiled Date	24 October 2006 11:15
Form Name	MSM23GB

CA-SIR-16

Ref: HELCO Response to CA-IR-331 Attachment 1 (CEMS).

a. Please provide an update of Attachment 1 through December 2006, when available.

b. Provide a detailed explanation and copies of supporting documentation for the $176,718 charged in February 2006, indicating all reasons why/if such activities are believed to normal and ongoing.

HELCO Response:

a. Actual data through December 31, 2006 is not available at this time and will be provided in late January 2007.

b. See Attachment 2 of this CA-SIR response for support documentation for the $176,718. Attachment 2 shows copies of purchase requisitions for December 2005 ($167,567.35) and January 2006 ($9,151.14). These requisitions were paid in February 2006 and included annual performance source testings of CT-3, CT-4, CT-5 and Keahole diesels. This is in addition to the monthly maintenance of the CEMS systems. With the addition of CT-4 and CT-5, such activities are normal and ongoing to maintain compliance with the units' covered source permits.

CA-SIR-17

Ref: HELCO Response to CA-IR-399 (GAM Spending).

According to the response, "There is no detailed report available that shows actual capital spending and expensed LABOR costs by GAM project and by RA for each listed unit, broken down annually for each year 2002 through 2005 and 2006 to-date (through August). GAM project costs were recorded to a series of project and workorders numbers and the identifying and gathering these to the detail level requested would be unduly burdensome." Please provide the following information.

a. Please provide the most detailed breakdown of GAM actual capital and expensed costs incurred in each of the prior years 2003 through 2006, by production department RA, that is available.

b. If no response is available to part (a) of this information request, explain how HELCO managed its GAM program activities and spending and provide complete copies of the data used for such management oversight in the absence of detailed expenditure reporting.

HELCO Response:

a. GAM costs were tracked by plant and by type (O&M versus Capital), and not by RA. This was provided in CA-IR-49, Attachments 10, 11, 12, 13 and 14. This is the most detailed breakdown that can be provided.

b. As explained in HELCO T-5, HELCO's GAM Program is a combination of projects and maintenance activities implemented to improve the reliability of HELCO's firm power generating units. HELCO commissioned Sargent & Lundy to prepare an engineering study ("GAM study") to determine the work requirements to enable HELCO's older units to operate reliably into the future. Based on this study and HELCO's own experiences with an assessment of its generating plants, the HELCO Production Department launched the GAM program in 2003. The evolution of the GAM Program is detailed in response to CA-IR-49.

HELCO's Production Department is charged with implementing all of the projects and activities carried out to operate and maintain HELCO's generating units, and not just

those that fall within the scope of the GAM Program. In order to track projects and activities, it has been sufficient to track expenditures by plant and by type (i.e., O&M versus capital), and has not been necessary to generate reports that further delineate these costs by labor costs and/or RA.

With respect to reporting to others, the information provided in the Attachments to the response to CA-IR-49 was sufficient to delineate the costs for the GAM Program, and thus was sufficient for the HELCO Production Manager to brief HELCO and HECO senior management on the technical progress, accomplishments, and financial status related to the implementation of the GAM Program.

CA-SIR-18

Ref: HELCO Response to CA-IR-447 (T-13; Taxes).

Regarding the statement, "Please note that taxes, including the individual deferred tax assets and liabilities, are subject to change as the 2006 test year estimates change," provide the following.

a. Actual per books Federal and State ADIT balances by 5-digit activity as of December 31, 2006, when available.
b. Calculations supporting the "Revised forecast" unamortized ITC amount of $1,083,580, as provided on page 2 of 13 at line 2.
c. Updated unamortized ITC for the year 2006, as of December 31, 2006, when available.
d. Explain why the "Various Deferred Tax Items" amounts at line 4 of page 2, from the response to CA-IR-280 (as detailed on page 3) are shown to have an "Income/(Expense)" impact, indicating where such expenses are believed to have been included in the test year forecast.
e. Explain the basis for the "reclass" entries on page 6 and why they impact the "Adjustment to Exclusions" associated with supplemental pension and Executive Life PRB amounts, as carried forward to lines 5 and 6 on page 2.

HELCO Response:

a. The Company has provided the preliminary December 31, 2006 federal and state ADIT balances because the financial statements have not been finalized as of the date of this submission. The 10-K is scheduled to be filed on February 28, 2007. Please refer to pages 3 through 6 of this response.

b. The unamortized state ITC amount was subsequently revised based on the Company's preliminary December 31, 2006 balances. Please refer to pages 7-44 of this response for the revised calculation and supporting workpapers. There was no change to the unamortized federal ITC amounts.

c. Please refer to b. above. A summary schedule of unamortized state ITC is shown on page 7 of this response.

d. The $16,640 amounts were inadvertently included in the income statement columns; it should be excluded as it did not directly affect cost of service.

e. The reclassification adjustments were the result of a comprehensive analysis of the various

pension-related deferred income tax activities. In the Company's analysis of the deferred tax liabilities related to pension, we noted that deferred taxes for supplemental pension and executive life post retirement benefit amounts were coded to the wrong activity (i.e., qualified pension) and inadvertently included in rate base. Supplemental pension and executive life post retirement expenses are excluded expenses and as a result, deferred tax reclassifications related to these items resulted in adjustments to the exclusions.

FEDERAL DEFERRED TAX LIAB DR(CR)		Actual 12/31/05	PER DIRECT Estimate 2006	PER DIRECT Estimate 12/31/06	Preliminary 2006	Preliminary Year-end 12/31/06
28301	CIAC	3,769,001	(858,252)	2,910,749	142,923	3,911,924
28303	Rate Case	(20,424)	(102,796)	(123,220)	(112,513)	(132,937)
28305	State ITC	3,792,888	157,699	3,950,587	176,360	3,969,248
28307	TIP	(451,052)	0	(451,052)	(40,329)	(491,381)
28309	Prepaid Expenses	(24,457)	0	(24,457)	(13,960)	(38,417)
28311	Public Injuries	120,000	0	120,000	(120,000)	0
28313	Gain on Sale of Mililani	(9,731)	0	(9,731)	9,731	0
28317	Amort of RB Int Differential	43,493	(5,987)	37,506	(5,997)	37,496
28319	Bad Debt	324,052	22,126	346,178	25,136	349,188
28321	Cap Cost of Trailer	4,824	0	4,824	(4,824)	0
28323	HCPC Purchase Power	(101,599)	0	(101,599)	101,599	0
28325	Computer Conv	14,151	0	14,151	(14,151)	0
28327	RAR 88-89	0	0	0	0	0
28329	Book Gains/Losses	(18,949)	0	(18,949)	18,949	0
28329	GAQS-Preferred Stock Offering	0	0	0	0	0
28329	Capitalized Hawaii Solar	3,134	0	3,134	(3,134)	0
28329	Energy Services Costs Incurred	33,413	0	33,413	0	33,413
28329	Sun Power for Schools	11,832	0	11,832	(1,662)	10,170
28329	BPI Costs	(84,319)	0	(84,319)	84,319	0
28329	HMSA Reserve	(23,860)	0	(23,860)	23,860	0
28329	PGV Settlement	(1)	0	(1)	1	0
28329	DSM	314,243	120,747	434,990	(184,510)	129,733
28329	Rev Bd Redemption Prem/Amort	(363,270)	23,956	(339,314)	23,956	(339,314)
28329	EEO Liab/Legal Reserves	0	0	0	0	0
28329	Capitalized Repairs	(917)	0	(917)	0	(917)
28329	Computer Program Services	(5,729)	0	(5,729)	0	(5,729)
28329	Purchase Power Agreement	9,866	0	9,866	0	9,866
28329	Emissions Fees	104,234	0	104,234	(1,779)	102,455
28329	Keahole Settlement	164,473	0	164,473	0	164,473
28329	Oil Spill Reserve	0	0	0	0	0
28329	Repair Allowance Adjustment (D&T)	(358,360)	0	(358,360)	(339,056)	(697,416)
28329	Sec 481(a) Adjustment (D&T)	(790,817)	0	(790,817)	(6,145)	(796,962)
28329	Deferred Compensation	0	0	0	(21,787)	(21,787)
28329	Overhauls	0	0	0	12,444	12,444
28331	Capitalized Legal Costs	436,596	0	436,596	4,470	441,066
28333	Supplemental Retirement	34,602	(2,138)	32,464	5,960	40,562
28339	Cap to Construction	(321,103)	19,302	(301,801)	20,110	(300,993)
28343	Cost of Removal	(6,194,194)	(285,130)	(6,479,324)	(722,286)	(6,916,480)
28349	Pension	(4,323,322)	883,553	(3,439,769)	122,458	(4,200,864)
28351	Capitalized Interest	5,838,351	(371,981)	5,466,370	(561,777)	5,276,574
28353	G/L ACRS Retirements	(2,286,916)	(111,825)	(2,398,741)	(345,446)	(2,632,362)
28355	EICP	633,430	0	633,430	29,015	662,445
28357	Customer Advances	8,692,326	218,288	8,910,614	(101,423)	8,590,903
28359	Workers Comp	101,837	129,460	231,297	24,773	126,610
28361	Nondeductible Interest	129,972	0	129,972	(22,928)	107,044
28363	Vacation Accrual	(66,019)	0	(66,019)	11,390	(54,629)
28365	Puna Sugar Settlement	51,770	0	51,770	(51,770)	0
28367	Software	71,112	11,954	83,066	19,944	91,056
28367	Prepaid Ellipse Relicensing Fee	22,237	10,176	32,413	10,176	32,413
28369	Accidents	112,307	(131,053)	(18,746)	(25,296)	87,011
28371	Bond	(6,195)	6,130	(65)	6,130	(65)
28373	Nonutility Depn	(81,415)	14,211	(67,204)	81,415	0
28375	Auto Liability	(147,768)	(9,199)	(156,967)	(1,534)	(149,302)
28379	CWIP Debt Transition	21,141	421	21,562	421	21,562
28381	CWIP Equity Transition	(86,061)	4,781	(81,280)	4,781	(81,280)
28383	CWIP Equity Grossup	(1,547,246)	272,093	(1,275,153)	289,979	(1,257,267)
28385	CWIP Debt	(2,541,989)	62,722	(2,479,267)	77,635	(2,464,354)
28387	CWIP Equity Net	(6,146,677)	(92,807)	(6,239,484)	(64,133)	(6,210,810)
28389	Plant Transition	(1,480,219)	105,730	(1,374,489)	105,730	(1,374,489)
28391	FAS 109 Flow Through	(641,522)	45,823	(595,699)	45,823	(595,699)

FEDERAL DEFERRED TAX LIAB DR(CR)	Actual 12/31/05	PER DIRECT Estimate 2006	PER DIRECT Estimate 12/31/06	Preliminary 2006	Preliminary Year-end 12/31/06
28393 Post Retirement Ben	(404,227)	75,164	(329,063)	840,425	436,198
28393 Post Retirement Ben - exec life	(44,408)	(5,054)	(49,462)	274,904	230,496
28397 IRP	(12,303)	0	(12,303)	1	(12,302)
28403 Reg Liab Federal ITC	612,926	(101,291)	511,635	(101,291)	511,635
28409 Reg Liab Excess Defd	21,061	(463)	20,598	(463)	20,598
28411 Reg Asset Deficit Defd	1,955	(5,120)	(3,165)	(5,119)	(3,164)
TOTAL ACCOUNT 283.01	(3,093,842)	101,240	(2,992,602)	(278,495)	(3,372,337)
TOTAL ACCOUNT 282.01 (Depreciation)	(19,031,663)	444,634	(18,587,029)	479,060	(18,552,603)
TOTAL FEDERAL DEF'D TAX BALANCE (before rate case adjustments)	(22,125,505)	545,874	(21,579,631)	200,565	(21,924,940)
TOTAL ACCOUNT 283.01	(3,093,842)	101,240	(2,992,602)	(278,495)	(3,372,337)
Less Rate Case Adjustments:					
Computer Conv Costs	14,151	0	14,151	(14,151)	0
Vacation Accrual	(66,019)	0	(66,019)	11,390	(54,629)
EICP	633,430	0	633,430	29,015	662,445
Nondeductible Interest	129,972	0	129,972	(22,928)	107,044
Nonutility Depn	(81,415)	14,211	(67,204)	81,415	0
Workers Comp	101,837	129,460	231,297	24,773	126,610
Accidents	112,307	(131,053)	(18,746)	(25,296)	87,011
Auto Liability	(147,768)	(9,199)	(156,967)	(1,534)	(149,302)
TIP	(451,052)	0	(451,052)	(40,329)	(491,381)
Supplemental Retirement	34,602	(2,138)	32,464	5,960	40,562
Rate Case	(20,424)	(102,796)	(123,220)	(112,513)	(132,937)
Post Retirement Ben - exec life	(44,408)	(5,054)	(49,462)	274,904	230,496
Keahole Settlement	164,473	0	0	0	164,473
AFUDC in CWIP	63,882	(25,905)	37,977	78,827	142,709
TCI in CWIP	(196,094)	143,447	(52,647)	32,942	(163,152)
"OTHER ITEMS" FEDERAL DEF'D TAX LIABILITY	(3,341,316)	90,267	(3,086,576)	(600,970)	(3,942,286)
DEF'D FED TAX LIABILITY ACCELERATED DEPR	(19,031,663)	444,634	(18,587,029)	479,060	(18,552,603)
FED DEF TAX LIAB (RATE BASE)	(22,372,979)	534,901	(21,673,605)	(121,910)	(22,494,889)
STATE DEF TAX LIAB (RATE BASE)	(3,066,867)	11,048	(3,025,743)	(68,556)	(3,135,422)
TOTAL DEFERRED TAX LIAB	(25,439,846)	545,949	(24,699,348)	(190,465)	(25,630,311)
AVERAGE RATE BASE (FED & STATE)			(25,069,597)		(25,535,078)

STATE DEFERRED TAX LIAB DR(CR)		Actual 12/31/05	PER DIRECT Estimate 2006	PER DIRECT Estimate 12/31/06	Preliminary 2006	Preliminary Year-end 12/31/06
28302	CIAC	625,871	(164,590)	461,281	18,722	644,593
28304	Rate Case	(3,734)	(18,797)	(22,531)	(20,574)	(24,308)
28306	State ITC	693,557	28,836	722,393	32,249	725,806
28308	TIP	(82,478)	0	(82,478)	(7,374)	(89,852)
28310	Prepaid Expense	(4,472)	0	(4,472)	(2,553)	(7,025)
28312	Public Injuries	0	0	0	0	0
28314	Gain on Sale of Mililani	(1,779)	0	(1,779)	1,779	0
28318	Amort of RB Int Differential	(514)	(1,095)	(1,609)	(1,097)	(1,611)
28320	Bad Debt	40,041	4,046	44,087	21,469	61,510
28322	Cap Cost of Trailer	1,103	0	1,103	(1,103)	0
28324	HCPC Purchase Power	(18,578)	0	(18,578)	18,578	0
28326	Computer Conv	1,947	0	1,947	(1,947)	0
28328	RAR 88-89	0	0	0	0	0
28330	Book Gains/Losses	(1,793)	0	(1,793)	1,793	0
28330	GAQS-Preferred Stock Offering	1,103	0	1,103	0	1,103
28330	Capitalized Hawaii Solar	573	0	573	(573)	0
28330	Energy Services Costs Incurred	6,109	0	6,109	0	6,109
28330	Sun Power for Schools	2,162	0	2,162	(304)	1,858
28330	BPI Costs	(15,418)	0	(15,418)	15,418	0
28330	HMSA Reserve	(4,363)	0	(4,363)	4,363	0
28330	PGV Settlement	(4)	0	(4)	4	0
28330	DSM	57,461	22,079	79,540	(33,739)	23,722
28330	Rev Bd Redemption Prem/Amort	(62,101)	4,381	(57,720)	4,380	(57,721)
28330	EEO Liab/Legal Reserves	0	0	0	0	0
28330	Capitalized Repairs	2,617	0	2,617	0	2,617
28330	Computer Program Services	0	0	0	0	0
28330	Purchase Power Agreement	0	0	0	0	0
28330	Emissions Fees	19,060	0	19,060	(325)	18,735
28330	Keahole Settlement	30,076	0	30,076	(1)	30,075
28330	Oil Spill Reserve	0	0	0	0	0
28330	Repair Allowance Adjustment (D&T)	(65,529)	0	(65,529)	(61,999)	(127,528)
28330	Sec 481(a) Adjustment (D&T)	(145,336)	0	(145,336)	(1,262)	(146,598)
28330	Deferred Compensation	0	0	0	(3,984)	(3,984)
28330	Overhauls	0	0	0	2,275	2,275
28332	Capitalized Legal Costs	74,715	0	74,715	1,600	76,315
28334	Supplemental Retirement	6,327	(391)	5,936	1,090	7,417
28340	Cap to Construction	(58,583)	3,529	(55,054)	3,676	(54,907)
28344	Cost of Removal	(1,133,028)	(52,138)	(1,185,166)	(132,076)	(1,265,104)
28350	Pension	(790,964)	161,564	(629,400)	22,807	(768,157)
28352	Capitalized Interest	1,091,266	(69,866)	1,021,400	(103,636)	987,630
28354	G/L ACRS Retirements	(419,763)	(20,449)	(440,212)	(61,535)	(481,298)
28356	EICP	116,040	0	116,040	5,306	121,346
28358	Customer Advances	1,591,483	39,916	1,631,399	(18,546)	1,572,937
28360	Workers Comp	18,622	23,673	42,295	4,529	23,151
28362	Nondeductible Interest	17,685	0	17,685	(4,193)	13,492
28364	Vacation Accrual	(6,166)	0	(6,166)	2,083	(4,083)
28366	Puna Sugar Settlement	12,674	0	12,674	(12,674)	0
28368	Software	11,764	2,186	13,950	3,646	15,410
28368	Prepaid Ellipse Relicensing Fee	4,066	1,861	5,927	1,861	5,927
28370	Accidents	20,536	(23,964)	(3,428)	(4,625)	15,911
28372	Bond	533	1,121	1,654	1,121	1,654
28374	Nonutility Depn	(14,173)	2,599	(11,574)	14,173	0
28376	Auto Liability	(27,021)	(1,682)	(28,703)	(280)	(27,301)
28380	CWIP Debt Transition	3,866	77	3,943	76	3,942
28382	CWIP Equity Transition	(15,737)	874	(14,863)	874	(14,863)
28384	CWIP Equity Grossup	(282,925)	49,754	(233,171)	53,025	(229,900)
28386	CWIP Debt	(464,821)	11,469	(453,352)	14,196	(450,625)
28388	CWIP Equity Net	(1,123,964)	(16,970)	(1,140,934)	(11,727)	(1,135,691)
28390	Plant Transition	(270,670)	19,334	(251,336)	19,335	(251,335)
28392	FAS 109 Flow Through	(117,308)	8,379	(108,929)	8,380	(108,928)
28394	Post Retirement Ben	(73,975)	13,744	(60,231)	153,231	79,256

STATE DEFERRED TAX LIAB DR(CR)	Actual 12/31/05	PER DIRECT Estimate 2006	PER DIRECT Estimate 12/31/06	Preliminary 2006	Preliminary Year-end 12/31/06
28393 Post Retirement Ben - exec life	(8,121)	(924)	(9,045)	50,269	42,148
28398 IRP	(2,861)	0	(2,861)	1	(2,860)
28404 Reg Liab Federal ITC	112,078	(18,522)	93,556	(18,521)	93,557
28410 Reg Liab Excess Defd	3,863	(85)	3,778	(85)	3,778
28412 Reg Asset Deficit Defd	4,218	(936)	3,282	(936)	3,282
TOTAL ACCOUNT 283.02	(644,764)	9,013	(635,751)	(23,360)	(668,124)
TOTAL ACCOUNT 282.02 (Depreciation)	(2,376,739)	4,042	(2,372,697)	13,698	(2,363,041)
TOTAL STATE DEFERRED TAX BALANCE (before rate case adjustments)	(3,021,503)	13,055	(3,008,448)	(9,662)	(3,031,165)
TOTAL ACCOUNT 283.02	(644,764)	9,013	(635,751)	(23,360)	(668,124)
Less Rate Case Adjustments:					
Computer Conv Costs	1,947	0	1,947	(1,947)	0
Vacation Accrual	(6,166)	0	(6,166)	2,083	(4,083)
EICP	116,040	0	116,040	5,306	121,346
Nondeductible Interest	17,685	0	17,685	(4,193)	13,492
Nonutility Depn	(14,173)	2,599	(11,574)	14,173	0
Workers Comp	18,622	23,673	42,295	4,529	23,151
Accidents	20,536	(23,964)	(3,428)	(4,625)	15,911
Auto Liability	(27,021)	(1,682)	(28,703)	(280)	(27,301)
TIP	(82,478)	0	(82,478)	(7,374)	(89,852)
Supplemental Retirement	6,327	(391)	5,936	1,090	7,417
Rate Case	(3,734)	(18,797)	(22,531)	(20,574)	(24,308)
Keahole Settlement	30,076	0	0	(1)	30,075
Post Retirement Ben - exec life	(8,121)	(924)	(9,045)	50,269	42,148
AFUDC in CWIP	11,681	(4,737)	6,944	14,414	26,095
TCI in CWIP	(35,857)	26,230	(9,627)	6,023	(29,834)
"OTHER ITEMS" STATE DEF'D TAX LIABILITY	(690,128)	7,006	(653,046)	(82,254)	(772,381)
DEF'D STATE TAX LIABILITY ACCELERATED DEPR	(2,376,739)	4,042	(2,372,697)	13,698	(2,363,041)
STATE DEF TAX LIAB (RATE BASE)	(3,066,867)	11,048	(3,025,743)	(68,556)	(3,135,422)

HAWAII ELECTRIC LIGHT COMPANY, INC.
UNAMORTIZED STATE ITC
UPDATED FOR PRELIMINARY 2006 FINANCIALS

BALANCE AT 1/1/2006	11,555,207	
2006 AMORTIZATION	(500,907)	
2006 ADDITIONS, NET OF RECAPTURE	1,121,134	A
BALANCE AT 12/31/2006	12,175,434	

2006 VINTAGE STATE ITC	1,122,889	
STATE ITC RECAPTURE	(1,755)	
ADDITIONS, NET OF RECAPTURE	1,121,134	CA-SIR-18, page 44
	A	

Expense Element	Work Order	Acct	State ITC Basis
501	PR012034	3113	28,859
201	H0000520	3120	289,955
201	H0000520	3120	45
201	H0000520	3120	53
501	H0000520	3120	9,799
501	H0000576	3120	6,498
201	H0000863	3120	17,701
501	H0000863	3120	45,983
508	H0001082	3120	8,148
201	H0001433	3120	101,138
201	H0001433	3120	248
205	H0001433	3120	25
501	H0001433	3120	34,645
501	PR000078 PW	3120	906
201	PR011442	3120	190
501	PR011442	3120	221,487
201	PR011444	3120	5,130
201	PR014670	3120	494
201	PR014670	3120	12,350
501	PR015697	3120	135,499
501	PR015741	3120	64,775
501	H0001256	3121	214,000
506	H0001256	3121	19,874
501	PR012410	3121	83,954
501	G0013325	3140	3,854
201	PR013901	3140	17,506
201	PR014948	3140	18,456
201	PR013333	3150	26,896
205	PR013334	3150	849
508	H0000527	3160	3,920
501	H0001135	3160	84,031
201	H0001385	3160	20,350
201	H0001385	3160	(194)
205	H0001385	3160	187
201	PR000086 PW	3160	32,999
201	PR000086 PW	3160	51,887
501	PR000086 PW	3160	70,505
501	PR011763	3160	47,685
508	PR011763	3160	10,877
205	PR011764	3160	17
501	PR011766	3160	95,884
201	PR014210	3160	5,151
201	PR014211	3160	4,999
201	PR014213	3160	4,999
201	PR014464	3160	1,890
201	PR014472	3160	928
501	PR014680	3160	55,400
201	PR015128	3160	578
201	PR015274	3160	2,335
201	PR015531	3160	21,603
501	PR015531	3160	5,809
201	PR015864	3160	374
201	H0000850	3330	107
201	H0000850	3330	814
501	H0000850	3330	200,319
201	H0001165	3340	(121,930)
201	H0001165	3340	48
501	H0001165	3340	84,243
201	PR013285	3350	583
205	PR013285	3350	222
201	PR014136	3350	834
201	H0001040	3420	5,379
201	PR010676	3420	17,506
501	PR010676	3420	25,254
201	H3164000	3430	734
501	H3164000	3430	160,335
201	PR012517	3430	(54)
501	PR012520	3430	13,042
205	PR012521	3430	590
501	PR012521	3430	4,988
520	PR012521	3430	205

Expense Element	Work Order	Acct	State ITC Basis
521	PR012521	3430	96
522	PR012521	3430	47
501	PR012860	3430	162,464
201	PR014188	3430	1,881
501	PR014189	3430	178
520	PR014189	3430	4
521	PR014189	3430	120
522	PR014189	3430	3,157
501	PR014190	3430	1,260,109
521	PR014190	3430	112
201	PR015446	3430	17,410
201	H3166000	3440	161
501	H3166000	3440	3,366
501	H0001062	3460	17,982
201	H3147000	3460	161
501	H3147000	3460	3,366
501	PR013575	3460	3,645
201	PR013645	3460	6,195
201	PR013711	3460	4,592
201	PR013953	3460	2,368
201	PR014180	3460	1,084
201	PR014209	3460	1,381
201	PR014495	3460	833
201	PR014585	3460	14,266
201	PR014585	3460	(2,021)
501	PR014585	3460	3,951
201	PR014686	3460	161
501	PR014686	3460	37,097
201	PR014687	3460	161
501	PR014687	3460	37,097
201	PR014916	3460	34,318
501	PR014916	3460	536
201	PR015012	3460	760
201	PR015012	3460	20
201	PR015087	3460	364
201	PR015087	3460	(27)
201	PR015151	3460	602
201	PR015273	3460	521
201	PR015571	3460	7,899
201	PR015787	3460	853
201	EE000752 PW	3530	776
201	EE040188	3530	(23,062)
201	EE040188	3530	(293,535)
201	EE081404	3530	2,495
201	EE081404	3530	(18)
205	EE081404	3530	201
501	EE081404	3530	3,260
201	EE084246	3530	2,719
201	EE084246	3530	64,256
201	H0000759	3530	(163)
205	H0001071	3530	92
201	H0001187	3530	16,837
201	H0001187	3530	17,865
201	H0001188	3530	5,640
501	H0001188	3530	23,393
201	H0001189	3530	5,367
501	H0001189	3530	7,261
201	H0001190	3530	37,421
201	H0001190	3530	76
205	H0001190	3530	23
501	H0001190	3530	5,279
505	H0001190	3530	181
506	H0001190	3530	64,308
521	H0001190	3530	3
201	H0001193	3530	144,889
201	H0001193	3530	336
205	H0001193	3530	300
501	H0001193	3530	89
521	H0001193	3530	56
201	H0001194	3530	74,767
201	H0001194	3530	144

Expense Element	Work Order	Acct	State ITC Basis
205	H0001194	3530	223
501	H0001194	3530	72,190
521	H0001194	3530	280
201	H0001200	3530	25,808
201	H0001200	3530	(5,715)
201	H0001200	3530	4,376
205	H0001200	3530	19
201	H0001207	3530	19,066
501	H0001207	3530	24,514
201	H0001208	3530	22,940
205	H0001208	3530	56
501	H0001208	3530	24,933
521	H0001208	3530	552
201	H0001361	3530	199
201	H0001361	3530	879
501	H0001361	3530	6,642
201	H0001526	3530	20,018
201	H0001527	3530	16,380
201	SS002040	3530	8,481
201	SS002040	3530	202
501	SS002040	3530	3,233
201	SS002042	3530	24,440
501	SS002042	3530	5,729
201	SS002073	3530	2,197
201	SS002073	3530	24,582
205	SS002073	3530	142
201	SS002085	3530	17,286
205	SS002085	3530	516
201	TD000059 PW	3530	8,481
201	TD021313	3530	801
201	TD022220	3530	4,785
201	00008103 PW	3550	638
501	00008103 PW	3550	683
201	00008202 PW	3550	10,452
505	00008202 PW	3550	18,459
505	00008539 PW	3550	4,898
201	00008548 PW	3550	11,566
501	00008548 PW	3550	1,598
505	00008548 PW	3550	4,453
201	00009256 PW	3550	3,508
201	EE000357 PW	3550	(1,712)
501	EE000357 PW	3550	60,349
505	EE000357 PW	3550	69,790
201	EE000942 PW	3550	689
201	EE072104	3550	3,254
505	EE072104	3550	1,302
201	H0000450	3550	20,610
201	H0001485	3550	773
201	H0001485	3550	33,612
205	H0001485	3550	127
501	H0001485	3550	22,716
201	H0010408 PW	3550	104
201	H0010408 PW	3550	38,525
201	H0010408 PW	3550	(1,113)
201	H0010408 PW	3550	91,557
205	H0010408 PW	3550	149
501	H0010408 PW	3550	29,889
505	H0010408 PW	3550	516,049
522	H0010408 PW	3550	1,134
201	00000520 PW	3560	37,087
201	00000520 PW	3560	36,383
505	00000520 PW	3560	341,180
201	00001946 PW	3560	(461)
501	00002211 PW	3560	352
201	00002406 PW	3560	(8,171)
201	00007328 PW	3560	3,129
201	00007939 PW	3560	2,774
501	00007939 PW	3560	2,182
505	00007939 PW	3560	7,673
201	00008353 PW	3560	1,027
501	00008353 PW	3560	252

Expense Element	Work Order	Acct	State ITC Basis
201	00008371 PW	3560	2,508
501	00008371 PW	3560	431
201	00008372 PW	3560	2,121
501	00008372 PW	3560	2,181
201	00008374 PW	3560	2,131
201	00008375 PW	3560	729
201	00008376 PW	3560	1,254
501	00008376 PW	3560	341
201	00008377 PW	3560	1,761
201	00008379 PW	3560	1,726
501	00008379 PW	3560	503
201	00008380 PW	3560	501
201	00008381 PW	3560	69
501	00008381 PW	3560	245
505	00008381 PW	3560	1,951
201	00008384 PW	3560	1,413
505	00008384 PW	3560	37,921
201	00008389 PW	3560	3,644
501	00008389 PW	3560	431
201	00008430 PW	3560	1,481
501	00008430 PW	3560	171
201	00008521 PW	3560	(778)
201	00008563 PW	3560	1,504
201	00008777 PW	3560	192
501	00008777 PW	3560	173
201	00008799 PW	3560	875
501	00008799 PW	3560	324
501	00009064 PW	3560	476
201	00009179 PW	3560	890
505	EE000609 PW	3560	29,423
201	H0001353	3560	37,211
201	H0001353	3560	2,918
501	TD021160	3560	216
201	EE000727 PW	3620	10,770
201	EE060099	3620	20,018
201	EE060099	3620	300,964
501	EE060099	3620	8,112
201	EE078255	3620	24,927
201	EE078255	3620	388,269
501	EE078255	3620	2,744
201	EE086148	3620	905
201	H0000445	3620	2,056
501	H0000445	3620	2,042
505	H0000445	3620	14,951
201	H0000449	3620	23,278
201	H0000449	3620	501,398
201	H0000449	3620	196
205	H0000449	3620	1,334
501	H0000449	3620	579,716
522	H0000449	3620	290
201	H0000451	3620	23,180
201	H0001120	3620	131
205	H0001120	3620	65
501	H0001120	3620	176,330
201	H0001186	3620	10,028
205	H0001186	3620	917
501	H0001186	3620	3,826
201	H0001271	3620	(1,836)
201	H0001331	3620	8,333
201	H0001331	3620	154,521
501	H0001331	3620	18,052
201	H0001368	3620	33,285
201	H0001368	3620	542,609
201	H0001368	3620	11,194
205	H0001368	3620	289
501	H0001368	3620	105,882
505	H0001368	3620	29,960
201	H0001369	3620	28,607
201	H0001371	3620	46,991
201	H0001371	3620	68
201	H0001371	3620	149

Expense Element	Work Order	Acct	State ITC Basis
205	H0001371	3620	106
501	H0001371	3620	12,320
201	H0001372	3620	46,991
201	H0001372	3620	67
201	H0001372	3620	128
501	H0001372	3620	12,320
201	H0001380	3620	31,472
201	H0001380	3620	86,260
201	H0001380	3620	(540)
201	H0001380	3620	59
205	H0001380	3620	1,209
501	H0001380	3620	396
201	H0001472	3620	44,013
201	H0001472	3620	1
201	H0001472	3620	307
205	H0001472	3620	674
201	H0001542	3620	43,992
201	H0001542	3620	68
501	H0001542	3620	5,925
201	SS000041 PW	3620	6,838
501	SS001479	3620	75
521	SS001479	3620	28
201	SS001892	3620	3,667
201	SS001928	3620	1,232
201	SS001931	3620	1,075
205	SS001933	3620	212
501	SS001933	3620	1,044
201	SS001977	3620	6,848
501	SS001977	3620	469
201	SS001979	3620	10,340
205	SS001979	3620	135
201	SS001980	3620	8,272
205	SS001980	3620	332
201	SS001982	3620	1,920
201	SS002002	3620	28,240
201	SS002024	3620	2,222
201	SS002043	3620	9,342
201	SS002043	3620	7,174
501	SS002043	3620	76,400
201	TD000053 PW	3620	413
201	TD000054 PW	3620	7,395
201	TD000054 PW	3620	6,148
205	TD000054 PW	3620	26
501	TD000054 PW	3620	52,683
201	TD000056 PW	3620	2,205
201	TD000061 PW	3620	35,857
201	TD000061 PW	3620	1,129
205	TD000061 PW	3620	153
501	TD000061 PW	3620	291
201	00000489 PW	3640	(86)
201	00005016 PW	3640	132
501	00005016 PW	3640	36
201	00005215 PW	3640	723
505	00005215 PW	3640	1,095
201	00006326 PW	3640	3,188
501	00006326 PW	3640	1,465
201	00007111 PW	3640	716
501	00007111 PW	3640	1,796
201	00007296 PW	3640	74
505	00007296 PW	3640	1,581
201	00007354 PW	3640	793
505	00007354 PW	3640	926
201	00007504 PW	3640	596
505	00007504 PW	3640	5,501
201	00007582 PW	3640	(36)
501	00007582 PW	3640	36
201	00007652 PW	3640	552
201	00007732 PW	3640	129
201	00007743 PW	3640	100
501	00007743 PW	3640	43
505	00007743 PW	3640	875

Expense Element	Work Order	Acct	State ITC Basis
201	00007768 PW	3640	51
201	00007778 PW	3640	1,363
501	00007778 PW	3640	3,563
201	00007833 PW	3640	1,160
501	00007833 PW	3640	399
505	00007833 PW	3640	1,359
201	00007881 PW	3640	(73)
505	00007881 PW	3640	72
201	00007931 PW	3640	266
201	00008194 PW	3640	71
505	00008194 PW	3640	542
201	00008218 PW	3640	1,199
501	00008218 PW	3640	1,195
201	00008228 PW	3640	623
501	00008245 PW	3640	234
201	00008258 PW	3640	1,406
501	00008258 PW	3640	108
505	00008258 PW	3640	1,315
501	00008277 PW	3640	180
505	00008277 PW	3640	4,234
505	00008310 PW	3640	980
505	00008317 PW	3640	54
201	00008325 PW	3640	426
505	00008325 PW	3640	1,652
201	00008349 PW	3640	1,115
501	00008349 PW	3640	90
505	00008349 PW	3640	896
201	00008382 PW	3640	445
505	00008382 PW	3640	950
201	00008391 PW	3640	107
201	00008398 PW	3640	134
505	00008398 PW	3640	4,971
201	00008399 PW	3640	597
505	00008399 PW	3640	4,389
201	00008403 PW	3640	1,158
505	00008403 PW	3640	935
201	00008426 PW	3640	1,086
201	00008437 PW	3640	54
201	00008444 PW	3640	108
201	00008465 PW	3640	59
505	00008465 PW	3640	1,078
201	00008466 PW	3640	208
201	00008470 PW	3640	59
505	00008470 PW	3640	1,078
201	00008480 PW	3640	63
201	00008481 PW	3640	390
201	00008485 PW	3640	1,207
505	00008485 PW	3640	11,128
201	00008486 PW	3640	200
505	00008486 PW	3640	1,518
201	00008487 PW	3640	200
505	00008487 PW	3640	1,170
201	00008494 PW	3640	7
505	00008494 PW	3640	6,658
201	00008499 PW	3640	348
505	00008499 PW	3640	833
201	00008500 PW	3640	354
505	00008500 PW	3640	5,000
201	00008511 PW	3640	48
505	00008511 PW	3640	108
201	00008516 PW	3640	41
201	00008522 PW	3640	75
501	00008522 PW	3640	72
505	00008522 PW	3640	1,350
201	00008541 PW	3640	711
501	00008541 PW	3640	800
505	00008541 PW	3640	1,946
201	00008556 PW	3640	1,458
501	00008556 PW	3640	1,347
201	00008565 PW	3640	1,406
501	00008565 PW	3640	437

Expense Element	Work Order	Acct	State ITC Basis
505	00008565 PW	3640	2,300
201	00008582 PW	3640	69
505	00008582 PW	3640	2,772
201	00008595 PW	3640	33
501	00008595 PW	3640	72
201	00008611 PW	3640	7,237
505	00008611 PW	3640	3,129
201	00008614 PW	3640	354
501	00008614 PW	3640	72
505	00008614 PW	3640	373
201	00008643 PW	3640	781
505	00008643 PW	3640	4,379
201	00008651 PW	3640	70
201	00008660 PW	3640	73
201	00008668 PW	3640	363
505	00008668 PW	3640	1,689
201	00008671 PW	3640	363
505	00008671 PW	3640	1,689
201	00008673 PW	3640	1,011
505	00008673 PW	3640	5,039
201	00008681 PW	3640	69
505	00008681 PW	3640	3,000
201	00008704 PW	3640	1,313
505	00008704 PW	3640	2,110
201	00008710 PW	3640	503
505	00008710 PW	3640	2,333
201	00008714 PW	3640	363
201	00008716 PW	3640	18
501	00008716 PW	3640	72
201	00008718 PW	3640	130
201	00008755 PW	3640	15
505	00008755 PW	3640	1,186
201	00008781 PW	3640	999
505	00008781 PW	3640	754
201	00008810 PW	3640	1,384
501	00008810 PW	3640	544
505	00008810 PW	3640	3,468
201	00008828 PW	3640	88
201	00008836 PW	3640	53
201	00008838 PW	3640	1,196
501	00008838 PW	3640	680
505	00008838 PW	3640	2,344
201	00008850 PW	3640	45
501	00008850 PW	3640	108
201	00008851 PW	3640	40
201	00008853 PW	3640	944
505	00008853 PW	3640	1,221
201	00008863 PW	3640	61
201	00008864 PW	3640	116
501	00008864 PW	3640	91
501	00008879 PW	3640	136
501	00008886 PW	3640	324
201	00008909 PW	3640	736
505	00008909 PW	3640	1,798
201	00008920 PW	3640	90
501	00008934 PW	3640	408
201	00008992 PW	3640	2,812
505	00008992 PW	3640	3,615
201	00009063 PW	3640	351
201	00009070 PW	3640	1,571
501	00009070 PW	3640	1,314
201	00009074 PW	3640	114
501	00009074 PW	3640	86
201	00009115 PW	3640	322
505	00009115 PW	3640	255
201	00009153 PW	3640	1,350
501	00009153 PW	3640	173
201	00009154 PW	3640	323
501	00009154 PW	3640	544
201	00009155 PW	3640	954
201	00009156 PW	3640	917

Expense Element	Work Order	Acct	State ITC Basis
505	00009156 PW	3640	1,286
201	00009170 PW	3640	1,605
201	00009173 PW	3640	1,657
501	00009173 PW	3640	173
201	00009174 PW	3640	124
505	00009174 PW	3640	2,000
201	00009210 PW	3640	78
201	00009212 PW	3640	78
201	00009222 PW	3640	1,486
505	00009222 PW	3640	3,000
201	00009228 PW	3640	4,216
505	00009228 PW	3640	1,500
201	00009239 PW	3640	44
201	00009259 PW	3640	919
201	EE000447 PW	3640	(638)
501	EE000447 PW	3640	(288)
505	EE000447 PW	3640	(5,225)
201	EE000651 PW	3640	33
505	EE000651 PW	3640	1,680
201	EE000750 PW	3640	76
501	EE000750 PW	3640	114
505	EE000750 PW	3640	1,450
201	EE000863 PW	3640	448
505	EE000863 PW	3640	4,343
505	EE000868 PW	3640	2,950
201	EE000903 PW	3640	397
505	EE000903 PW	3640	928
201	EE000906 PW	3640	107
505	EE000906 PW	3640	10,746
201	EE000907 PW	3640	74
505	EE000907 PW	3640	1,818
201	EE000911 PW	3640	112
505	EE000911 PW	3640	4,277
201	EE000912 PW	3640	1,655
505	EE000912 PW	3640	13,018
201	EE000925 PW	3640	1,609
201	EE000925 PW	3640	19,214
501	EE000925 PW	3640	4,570
505	EE000925 PW	3640	10,033
201	EE000934 PW	3640	6,418
505	EE000934 PW	3640	72,179
201	EE000938 PW	3640	4,377
505	EE000938 PW	3640	23,497
201	EE000945 PW	3640	3,428
505	EE000945 PW	3640	33,866
201	EE000981 PW	3640	156
501	EE000981 PW	3640	216
201	EE000995 PW	3640	5,337
201	EE001019 PW	3640	524
501	EE001019 PW	3640	167
505	EE001019 PW	3640	2,000
201	EE001020 PW	3640	81
201	EE001025 PW	3640	2,092
505	EE001025 PW	3640	4,600
201	EE001039 PW	3640	122
501	EE001039 PW	3640	86
520	EE003450	3640	981
201	EE045298	3640	451
505	EE045298	3640	14,319
505	EE045759	3640	7,276
201	EE048194	3640	1,891
505	EE048194	3640	2,200
201	EE049104	3640	580
505	EE049104	3640	2,031
201	EE053190	3640	1,696
505	EE053190	3640	3,535
201	EE059679	3640	1,309
505	EE059679	3640	10,916
201	EE060596	3640	2,340
505	EE060596	3640	4,900
201	EE062367	3640	2,849

Expense Element	Work Order	Acct	State ITC Basis
505	EE062367	3640	43,822
201	EE063497	3640	482
505	EE063497	3640	5,685
201	EE063690	3640	289
501	EE063690	3640	8,585
505	EE063690	3640	2,451
201	EE065076	3640	1,337
505	EE065076	3640	4,815
201	EE065324	3640	4,889
501	EE065324	3640	133
505	EE065324	3640	15,600
201	EE065507	3640	2,352
505	EE065507	3640	31,123
201	EE065701	3640	487
201	EE066060	3640	309
501	EE066060	3640	2,972
201	EE066401	3640	455
505	EE066401	3640	2,144
201	EE066688	3640	930
505	EE066688	3640	6,640
201	EE066955	3640	266
505	EE066955	3640	5,705
201	EE067236	3640	735
501	EE067236	3640	130
201	EE067317	3640	1,630
505	EE067317	3640	1,800
201	EE067332	3640	1,878
505	EE067332	3640	4,384
201	EE067773	3640	2,138
501	EE067773	3640	485
505	EE067773	3640	1,147
201	EE068340	3640	2,094
505	EE068340	3640	1,784
201	EE068398	3640	2,905
505	EE068398	3640	37,278
201	EE068543	3640	2,563
505	EE068543	3640	4,332
201	EE069009	3640	624
505	EE069009	3640	3,865
201	EE069306	3640	864
505	EE069306	3640	11,564
201	EE070132	3640	2,139
505	EE070132	3640	11,137
201	EE070351	3640	422
501	EE070351	3640	36
505	EE070351	3640	675
201	EE071057	3640	1,903
501	EE071057	3640	108
505	EE071057	3640	4,700
201	EE071534	3640	266
501	EE071534	3640	6,107
201	EE072105	3640	273
201	EE072487	3640	401
505	EE072487	3640	2,031
201	EE073202	3640	3,026
505	EE073202	3640	10,331
501	EE073228	3640	108
201	EE073521	3640	565
501	EE073521	3640	144
505	EE073521	3640	1,550
201	EE073546	3640	367
505	EE073546	3640	1,250
201	EE074288	3640	149
505	EE074288	3640	9,301
505	EE074328	3640	24,112
505	EE074350	3640	1,250
201	EE074519	3640	2,395
505	EE074519	3640	58,934
201	EE074600	3640	1,065
505	EE074600	3640	3,079
505	EE074710	3640	4,484

Expense Element	Work Order	Acct	State ITC Basis
501	EE075208	3640	629
505	EE075208	3640	540
201	EE075346	3640	2,105
501	EE075346	3640	216
505	EE075346	3640	5,160
201	EE075468	3640	412
505	EE075468	3640	2,975
505	EE075615	3640	1,400
501	EE075633	3640	216
501	EE075775	3640	144
505	EE075775	3640	1,986
201	EE075931	3640	1,443
505	EE075931	3640	1,960
501	EE076061	3640	108
505	EE076061	3640	6,033
501	EE076065	3640	72
201	EE076087	3640	536
505	EE076087	3640	2,031
201	EE076195	3640	343
505	EE076195	3640	836
201	EE076322	3640	766
501	EE076322	3640	393
505	EE076322	3640	909
201	EE076377	3640	422
501	EE076377	3640	72
505	EE076377	3640	695
201	EE076694	3640	3,572
501	EE076694	3640	108
505	EE076694	3640	5,272
201	EE076806	3640	1,009
201	EE076874	3640	440
505	EE076874	3640	2,317
201	EE077030	3640	421
201	EE077516	3640	495
505	EE077516	3640	2,466
201	EE077543	3640	4,002
501	EE077543	3640	234
505	EE077543	3640	5,993
201	EE077553	3640	744
505	EE077553	3640	3,225
505	EE077982	3640	435
201	EE078129	3640	844
501	EE078129	3640	144
505	EE078129	3640	1,800
201	EE078139	3640	930
501	EE078139	3640	108
505	EE078139	3640	664
505	EE078270	3640	6,173
201	EE078290	3640	3,787
501	EE078290	3640	513
505	EE078290	3640	5,300
201	EE078403	3640	1,683
505	EE078403	3640	25,568
201	EE078837	3640	390
505	EE078837	3640	950
201	EE078873	3640	452
501	EE078949	3640	162
505	EE078949	3640	7,539
201	EE079049	3640	2,523
505	EE079049	3640	3,838
201	EE079121	3640	488
505	EE079121	3640	1,182
201	EE079453	3640	422
501	EE079453	3640	108
505	EE079453	3640	600
201	EE079573	3640	1,891
501	EE079573	3640	162
505	EE079573	3640	2,476
201	EE079809	3640	938
505	EE079809	3640	2,180
201	EE079987	3640	390

Expense Element	Work Order	Acct	State ITC Basis
501	EE079987	3640	36
505	EE079987	3640	600
201	EE080107	3640	420
505	EE080107	3640	3,958
201	EE080181	3640	371
201	EE080253	3640	390
501	EE080253	3640	54
505	EE080253	3640	600
201	EE080298	3640	2,190
505	EE080298	3640	9,018
201	EE080627	3640	341
505	EE080627	3640	3,871
201	EE080756	3640	2,502
501	EE080756	3640	216
505	EE080756	3640	2,600
201	EE080759	3640	343
505	EE080759	3640	950
201	EE080888	3640	422
505	EE080888	3640	1,019
201	EE081079	3640	555
501	EE081079	3640	5,835
505	EE081079	3640	3,330
201	EE081097	3640	422
501	EE081097	3640	90
505	EE081097	3640	845
201	EE081187	3640	1,203
505	EE081187	3640	12,545
201	EE081202	3640	422
505	EE081202	3640	1,019
201	EE081206	3640	422
505	EE081206	3640	1,019
201	EE081251	3640	896
505	EE081251	3640	2,518
201	EE081261	3640	422
501	EE081261	3640	72
505	EE081261	3640	860
201	EE081290	3640	422
505	EE081290	3640	860
201	EE081321	3640	1,673
505	EE081321	3640	11,169
201	EE081355	3640	2,233
505	EE081355	3640	5,926
201	EE081441	3640	598
501	EE081441	3640	72
505	EE081441	3640	1,250
201	EE081520	3640	1,257
505	EE081520	3640	8,758
201	EE081563	3640	366
505	EE081563	3640	2,209
201	EE081631	3640	768
505	EE081631	3640	2,835
201	EE081675	3640	702
505	EE081675	3640	2,238
201	EE081680	3640	875
505	EE081680	3640	2,134
201	EE081744	3640	366
505	EE081744	3640	5,645
201	EE081751	3640	1,448
501	EE081751	3640	288
505	EE081751	3640	2,700
201	EE082205	3640	1,711
505	EE082205	3640	22,927
201	EE082234	3640	453
505	EE082234	3640	1,218
201	EE082309	3640	1,068
505	EE082309	3640	1,343
201	EE082487	3640	4,889
505	EE082487	3640	12,993
201	EE082503	3640	3,427
505	EE082503	3640	3,363
201	EE082631	3640	1,296

Expense Element	Work Order	Acct	State ITC Basis
505	EE082631	3640	1,958
201	EE082770	3640	803
505	EE082770	3640	7,932
201	EE082933	3640	801
501	EE082933	3640	72
505	EE082933	3640	1,400
201	EE083017	3640	855
505	EE083017	3640	6,515
201	EE083171	3640	3,776
501	EE083171	3640	288
201	EE083405	3640	2,102
505	EE083405	3640	7,790
201	EE083660	3640	455
501	EE083660	3640	660
505	EE083660	3640	4,440
201	EE083762	3640	374
501	EE083762	3640	144
505	EE083762	3640	1,300
201	EE083984	3640	589
501	EE083984	3640	144
505	EE083984	3640	1,400
201	EE084048	3640	1,450
505	EE084048	3640	2,406
201	EE084086	3640	3,056
505	EE084086	3640	12,883
201	EE084087	3640	2,491
505	EE084087	3640	7,259
201	EE084226	3640	2,248
505	EE084226	3640	20,794
201	EE084350	3640	369
505	EE084350	3640	3,279
201	EE084379	3640	2,025
505	EE084379	3640	23,273
201	EE084408	3640	884
505	EE084408	3640	9,288
201	EE084722	3640	717
505	EE084722	3640	800
201	EE084822	3640	359
201	EE084855	3640	363
501	EE084855	3640	65
505	EE084855	3640	800
201	EE085236	3640	3,807
501	EE085236	3640	303
505	EE085236	3640	6,100
201	EE085237	3640	1,248
501	EE085237	3640	72
505	EE085237	3640	4,850
201	EE085291	3640	1,603
505	EE085291	3640	7,712
201	EE085466	3640	735
501	EE085466	3640	223
505	EE085466	3640	850
201	EE085530	3640	2,671
505	EE085530	3640	10,362
201	EE085625	3640	812
501	EE085625	3640	216
505	EE085625	3640	2,350
201	EE085717	3640	3,008
501	EE085717	3640	346
505	EE085717	3640	2,550
201	EE085845	3640	2,629
505	EE085845	3640	33,593
201	EE085985	3640	363
501	EE085985	3640	173
505	EE085985	3640	988
201	EE086146	3640	1,511
501	EE086146	3640	2,409
201	EE086149	3640	2,724
501	EE086149	3640	3,800
201	EE086187	3640	1,094
505	EE086187	3640	17,806

Expense Element	Work Order	Acct	State ITC Basis
201	EE086189	3640	1,786
505	EE086189	3640	4,999
201	EE086578	3640	1,226
505	EE086578	3640	3,518
201	EE086634	3640	363
501	EE086634	3640	65
505	EE086634	3640	1,186
201	EE086855	3640	3,478
501	EE086855	3640	7,773
201	EE087068	3640	1,114
501	EE087068	3640	1,707
201	EE087308	3640	366
505	EE087308	3640	761
201	EE087472	3640	871
505	EE087472	3640	2,372
201	EE088332	3640	1,705
505	EE088332	3640	33,868
201	EE088558	3640	2,088
505	EE088558	3640	27,766
201	EE089015	3640	89
505	EE089015	3640	11,233
201	EE089242	3640	4,902
505	EE089242	3640	13,612
201	EE089305	3640	619
201	EE089306	3640	512
501	EE089306	3640	1,356
201	EE089558	3640	5,697
505	EE089558	3640	5,071
201	EE089630	3640	388
501	EE089630	3640	885
201	EE090103	3640	885
501	EE090103	3640	130
201	EE090113	3640	371
501	EE090113	3640	986
201	EE090139	3640	1,342
201	EE090202	3640	1,278
505	EE090202	3640	3,517
201	EE090386	3640	388
501	EE090386	3640	990
501	EE090403	3640	2,344
201	EE090404	3640	491
201	EE090908	3640	466
201	EE091166	3640	1,454
505	EE091166	3640	3,517
201	EE091245	3640	1,588
505	EE091245	3640	8,537
201	EE091383	3640	1,074
501	EE091383	3640	86
505	EE091383	3640	1,319
201	EE091442	3640	6,964
501	EE091442	3640	692
505	EE091442	3640	2,350
201	EE091452	3640	1,198
501	EE091452	3640	130
505	EE091452	3640	3,900
201	EE091616	3640	388
505	EE091616	3640	700
201	EE091689	3640	907
501	EE091689	3640	130
505	EE091689	3640	1,400
201	EE091972	3640	13
201	EE091972	3640	1,427
205	EE091972	3640	192
501	EE091972	3640	3,517
201	EE092154	3640	3,111
501	EE092154	3640	238
505	EE092154	3640	849
201	EE092578	3640	1,402
505	EE092578	3640	1,528
201	EE093407	3640	741
501	EE093407	3640	130

Expense Element	Work Order	Acct	State ITC Basis
505	EE093407	3640	1,528
201	EE093521	3640	741
501	EE093521	3640	173
505	EE093521	3640	1,528
201	EE093544	3640	5,282
201	H0000452	3640	42,834
505	H0000452	3640	59,197
201	H0000633	3640	(6,422)
201	H0001243	3640	7,350
201	H0001264	3640	28,042
501	H0001264	3640	288
505	H0001264	3640	100,128
201	H0001272	3640	4,747
505	H0001272	3640	15,600
201	H0001273	3640	152
505	H0001273	3640	37,734
201	H0001298	3640	8,213
501	H0001298	3640	305
505	H0001298	3640	13,926
201	H0001299	3640	2,380
505	H0001299	3640	1,975
505	H0001300	3640	773
201	H0001305	3640	963
505	H0001305	3640	39,217
201	H0001307	3640	139
505	H0001307	3640	37,543
201	H0001312	3640	107
505	H0001312	3640	3,614
201	H0001316	3640	23,042
501	H0001316	3640	90
201	H0001320	3640	1,819
505	H0001320	3640	2,936
201	H0001338	3640	2,672
505	H0001338	3640	14,839
201	H0001339	3640	6,139
505	H0001339	3640	26,620
201	H0001340	3640	7
201	H0001340	3640	16,959
505	H0001340	3640	22,382
501	H0001341	3640	266
201	H0001422	3640	7,647
501	H0001422	3640	722
505	H0001422	3640	19,745
201	H0001423	3640	2,133
505	H0001423	3640	11,000
201	H0001424	3640	2,392
505	H0001424	3640	6,875
201	H0001425	3640	3,204
505	H0001425	3640	10,331
201	H0001426	3640	4,400
505	H0001426	3640	12,375
201	H0001427	3640	1,284
505	H0001427	3640	4,058
201	H0001428	3640	10,604
501	H0001428	3640	1,200
505	H0001428	3640	33,653
201	H0001429	3640	3,036
505	H0001429	3640	4,819
201	H0001430	3640	40,472
501	H0001430	3640	60,571
201	H0001432	3640	12,472
501	H0001432	3640	173
505	H0001432	3640	7,550
201	H0001434	3640	4,494
505	H0001434	3640	12,375
201	H0001436	3640	8,529
501	H0001436	3640	2,059
505	H0001436	3640	36,309
201	H0001439	3640	5,248
501	H0001439	3640	485
505	H0001439	3640	6,000

Expense Element	Work Order	Acct	State ITC Basis
201	H0001441	3640	1,408
505	H0001441	3640	4,819
201	H0001447	3640	9,695
501	H0001447	3640	12,347
201	H0001448	3640	7,400
505	H0001448	3640	23,475
201	H0001449	3640	3,059
501	H0001449	3640	15,670
505	H0001449	3640	4,500
201	H0001451	3640	4,985
505	H0001451	3640	23,128
201	H0001452	3640	2,218
505	H0001452	3640	4,276
201	H0001464	3640	2,447
505	H0001464	3640	14,165
201	H0001465	3640	3,220
505	H0001465	3640	17,773
201	H0001466	3640	5,073
501	H0001466	3640	4,254
505	H0001466	3640	6,825
201	H0001476	3640	3,096
505	H0001476	3640	50,883
201	H0001478	3640	8,933
501	H0001478	3640	6,126
201	H0001480	3640	13,133
501	H0001480	3640	346
505	H0001480	3640	6,900
201	H0001481	3640	4,753
505	H0001481	3640	14,094
201	H0001483	3640	20,726
501	H0001483	3640	1,723
505	H0001483	3640	30,854
201	H0001486	3640	5,617
505	H0001486	3640	12,881
201	H0001488	3640	4,336
501	H0001488	3640	1,200
505	H0001488	3640	8,808
201	H0001492	3640	2,641
505	H0001492	3640	20,365
201	H0001498	3640	2,604
501	H0001498	3640	346
505	H0001498	3640	5,152
201	H0001501	3640	3,774
505	H0001501	3640	7,618
201	H0001503	3640	4,342
505	H0001503	3640	9,862
201	H0001504	3640	6,602
505	H0001504	3640	13,074
201	H0001512	3640	3,677
501	H0001512	3640	1,800
505	H0001512	3640	9,953
201	H0001513	3640	10,098
501	H0001513	3640	497
505	H0001513	3640	7,350
201	H0001516	3640	5,877
505	H0001516	3640	5,775
201	H0001517	3640	7,240
505	H0001517	3640	8,100
201	H0001522	3640	22,622
501	H0001522	3640	3,297
505	H0001522	3640	35,217
201	H0001536	3640	11,325
505	H0001536	3640	15,176
201	H0013785 PW	3640	2,191
501	H0013785 PW	3640	2,450
501	H0019504 PW	3640	228
201	H0019903 PW	3640	1,802
505	H0019903 PW	3640	641
201	H0020422 PW	3640	452
505	H0020422 PW	3640	916
201	H0021050 PW	3640	1,539

Expense Element	Work Order	Acct	State ITC Basis
501	H0021050 PW	3640	3,373
201	H0021101 PW	3640	482
505	H0021101 PW	3640	695
201	H0021207 PW	3640	5,017
501	H0021207 PW	3640	144
505	H0021207 PW	3640	4,600
201	H0021705 PW	3640	462
505	H0021705 PW	3640	6,000
201	H0021783 PW	3640	2,145
505	H0021783 PW	3640	4,250
201	H0021973 PW	3640	3,075
501	H0021973 PW	3640	252
505	H0021973 PW	3640	3,861
201	H0022325 PW	3640	359
201	H0022722 PW	3640	343
505	H0022722 PW	3640	600
201	H0022762 PW	3640	8,201
501	H0022762 PW	3640	1,006
505	H0022762 PW	3640	6,264
201	H0022930 PW	3640	3,342
505	H0022930 PW	3640	3,521
501	H0023328 PW	3640	144
201	H0023441 PW	3640	713
501	H0023441 PW	3640	1,790
201	H0023643 PW	3640	348
505	H0023643 PW	3640	971
501	H0023937 PW	3640	252
201	H0024151 PW	3640	2,496
501	H0024151 PW	3640	15,382
201	H0024235 PW	3640	949
505	H0024235 PW	3640	1,676
201	H0024289 PW	3640	1,475
505	H0024289 PW	3640	2,600
201	H0024323 PW	3640	3,256
501	H0024323 PW	3640	144
505	H0024323 PW	3640	2,338
201	H0024422 PW	3640	1,871
505	H0024422 PW	3640	9,826
201	H0024441 PW	3640	496
501	H0024441 PW	3640	108
505	H0024441 PW	3640	850
501	H0024599 PW	3640	180
201	H0024633 PW	3640	10,813
505	H0024633 PW	3640	5,657
201	H0024880 PW	3640	3,589
505	H0024880 PW	3640	5,261
201	H0024889 PW	3640	2,729
505	H0024889 PW	3640	15,580
201	H0025022 PW	3640	1,254
501	H0025022 PW	3640	122
505	H0025022 PW	3640	650
201	H0025194 PW	3640	773
505	H0025194 PW	3640	3,276
201	H0025430 PW	3640	6,513
501	H0025430 PW	3640	1,800
505	H0025430 PW	3640	14,133
501	H0025501 PW	3640	72
201	H0025697 PW	3640	1,066
505	H0025697 PW	3640	1,932
201	H0025704 PW	3640	368
201	H0025739 PW	3640	343
501	H0025739 PW	3640	108
505	H0025739 PW	3640	550
501	H0025769 PW	3640	144
201	H0025840 PW	3640	6,121
501	H0025840 PW	3640	2,076
505	H0025840 PW	3640	400
201	H0025970 PW	3640	2,324
501	H0025970 PW	3640	180
505	H0025970 PW	3640	1,300
201	H0026207 PW	3640	386

Expense Element	Work Order	Acct	State ITC Basis
501	H0026207 PW	3640	650
201	H0026265 PW	3640	2,713
501	H0026265 PW	3640	305
505	H0026265 PW	3640	1,900
201	H0026280 PW	3640	869
501	H0026280 PW	3640	72
505	H0026280 PW	3640	1,700
201	H0026455 PW	3640	1,255
501	H0026455 PW	3640	54
505	H0026455 PW	3640	2,150
201	H0026456 PW	3640	707
501	H0026456 PW	3640	72
505	H0026456 PW	3640	1,300
201	H0026479 PW	3640	348
505	H0026479 PW	3640	600
201	H0026520 PW	3640	348
505	H0026520 PW	3640	747
201	H0026579 PW	3640	348
505	H0026579 PW	3640	650
201	H0026628 PW	3640	1,587
501	H0026628 PW	3640	144
505	H0026628 PW	3640	2,650
201	H0026643 PW	3640	26
201	H0026745 PW	3640	2,865
505	H0026745 PW	3640	6,237
201	H0026839 PW	3640	68
505	H0026839 PW	3640	1,375
201	H0026920 PW	3640	3,540
501	H0026920 PW	3640	173
201	H0026977 PW	3640	2,464
501	H0026977 PW	3640	216
505	H0026977 PW	3640	4,969
201	H0026992 PW	3640	2,121
501	H0026992 PW	3640	6,151
201	H0027098 PW	3640	462
501	H0027098 PW	3640	108
505	H0027098 PW	3640	1,400
201	H0027116 PW	3640	368
505	H0027116 PW	3640	950
201	H0027151 PW	3640	390
505	H0027151 PW	3640	1,388
201	H0027158 PW	3640	3,277
505	H0027158 PW	3640	3,872
201	H0027241 PW	3640	435
505	H0027241 PW	3640	1,372
201	H0027289 PW	3640	1,931
501	H0027289 PW	3640	72
505	H0027289 PW	3640	2,456
201	H0027357 PW	3640	2,669
501	H0027357 PW	3640	173
505	H0027357 PW	3640	3,975
201	H0027387 PW	3640	1,321
501	H0027387 PW	3640	144
505	H0027387 PW	3640	2,600
201	H0027459 PW	3640	807
501	H0027459 PW	3640	324
505	H0027459 PW	3640	1,581
201	H0027480 PW	3640	571
201	H0027540 PW	3640	1,546
501	H0027540 PW	3640	3,424
201	H0027650 PW	3640	359
505	H0027650 PW	3640	800
201	H0027660 PW	3640	2,456
505	H0027660 PW	3640	8,779
201	H0027662 PW	3640	756
501	H0027662 PW	3640	108
505	H0027662 PW	3640	600
201	H0027675 PW	3640	1,614
501	H0027675 PW	3640	144
201	H0027709 PW	3640	2,940
505	H0027709 PW	3640	1,664

Expense Element	Work Order	Acct	State ITC Basis
201	H0027726 PW	3640	3,425
501	H0027726 PW	3640	198
505	H0027726 PW	3640	6,319
201	H0027774 PW	3640	5,722
501	H0027774 PW	3640	144
505	H0027774 PW	3640	7,000
201	H0027785 PW	3640	422
501	H0027785 PW	3640	108
505	H0027785 PW	3640	600
201	H0027839 PW	3640	1,371
505	H0027839 PW	3640	2,040
201	H0027915 PW	3640	2,238
501	H0027915 PW	3640	144
505	H0027915 PW	3640	4,350
201	H0028023 PW	3640	1,355
501	H0028023 PW	3640	135
505	H0028023 PW	3640	2,800
201	H0028084 PW	3640	866
501	H0028084 PW	3640	144
505	H0028084 PW	3640	2,545
201	H0028240 PW	3640	363
501	H0028240 PW	3640	72
505	H0028240 PW	3640	1,600
201	H0028274 PW	3640	422
501	H0028274 PW	3640	108
505	H0028274 PW	3640	650
201	H0028441 PW	3640	2,153
505	H0028441 PW	3640	3,330
201	H0028525 PW	3640	1,113
505	H0028525 PW	3640	317
201	H0028532 PW	3640	1,052
501	H0028532 PW	3640	3,128
201	H0028622 PW	3640	422
505	H0028622 PW	3640	845
201	H0028720 PW	3640	348
505	H0028720 PW	3640	747
201	H0028739 PW	3640	451
501	H0028739 PW	3640	1,313
201	H0028773 PW	3640	1,050
501	H0028773 PW	3640	3,651
201	H0028788 PW	3640	348
505	H0028788 PW	3640	672
201	H0028845 PW	3640	5,919
501	H0028845 PW	3640	7,605
201	H0028942 PW	3640	65
201	H0029069 PW	3640	348
505	H0029069 PW	3640	747
201	H0029096 PW	3640	885
501	H0029096 PW	3640	65
201	H0029102 PW	3640	368
501	H0029102 PW	3640	1,356
505	H0029102 PW	3640	454
201	H0029136 PW	3640	2,765
501	H0029136 PW	3640	72
505	H0029136 PW	3640	3,700
201	H0029153 PW	3640	1,396
501	H0029153 PW	3640	198
505	H0029153 PW	3640	4,250
201	H0029166 PW	3640	1,271
505	H0029166 PW	3640	1,740
201	H0029217 PW	3640	65
201	H0029238 PW	3640	3,978
501	H0029238 PW	3640	2,590
505	H0029238 PW	3640	4,400
201	H0029288 PW	3640	455
501	H0029288 PW	3640	54
505	H0029288 PW	3640	1,600
201	H0029382 PW	3640	5,817
501	H0029382 PW	3640	411
505	H0029382 PW	3640	6,800
201	H0029387 PW	3640	683

Expense Element	Work Order	Acct	State ITC Basis
501	H0029387 PW	3640	1,351
201	H0029390 PW	3640	755
501	H0029390 PW	3640	216
201	H0029395 PW	3640	984
505	H0029395 PW	3640	1,151
201	H0029460 PW	3640	514
501	H0029460 PW	3640	90
505	H0029460 PW	3640	1,111
201	H0029498 PW	3640	6,151
501	H0029498 PW	3640	1,776
201	H0029590 PW	3640	368
501	H0029590 PW	3640	151
505	H0029590 PW	3640	791
201	H0029711 PW	3640	343
505	H0029711 PW	3640	881
201	H0029713 PW	3640	354
501	H0029713 PW	3640	72
505	H0029713 PW	3640	756
201	H0029834 PW	3640	354
501	H0029834 PW	3640	54
505	H0029834 PW	3640	700
201	H0029869 PW	3640	902
501	H0029869 PW	3640	1,573
201	H0029879 PW	3640	348
505	H0029879 PW	3640	872
201	H0029942 PW	3640	2,180
501	H0029942 PW	3640	173
505	H0029942 PW	3640	4,600
201	H0029964 PW	3640	944
501	H0029964 PW	3640	1,990
201	H0030003 PW	3640	718
501	H0030003 PW	3640	108
505	H0030003 PW	3640	1,500
201	H0030022 PW	3640	1,081
501	H0030022 PW	3640	2,108
201	H0030107 PW	3640	1,064
501	H0030107 PW	3640	288
505	H0030107 PW	3640	2,000
201	H0030136 PW	3640	7,395
505	H0030136 PW	3640	21,857
201	H0030170 PW	3640	1,175
501	H0030170 PW	3640	4,900
201	H0030183 PW	3640	435
505	H0030183 PW	3640	4,375
201	H0030302 PW	3640	2,431
501	H0030302 PW	3640	6,116
201	H0030529 PW	3640	3,931
501	H0030529 PW	3640	389
201	H0030533 PW	3640	1,518
201	H0030564 PW	3640	1,857
501	H0030564 PW	3640	1,973
201	H0030575 PW	3640	3,838
501	H0030575 PW	3640	4,200
201	H0030613 PW	3640	462
501	H0030613 PW	3640	86
201	H0030662 PW	3640	1,854
505	H0030662 PW	3640	2,100
201	H0030676 PW	3640	706
501	H0030676 PW	3640	72
505	H0030676 PW	3640	1,400
201	H0030831 PW	3640	1,452
501	H0030831 PW	3640	2,873
201	H0030895 PW	3640	368
501	H0030895 PW	3640	130
201	H0030994 PW	3640	1,067
501	H0030994 PW	3640	317
505	H0030994 PW	3640	1,581
201	H0031199 PW	3640	363
505	H0031199 PW	3640	800
201	H0031435 PW	3640	423
501	H0031435 PW	3640	43

Expense Element	Work Order	Acct	State ITC Basis
505	H0031435 PW	3640	1,400
201	H0031587 PW	3640	375
501	H0031587 PW	3640	108
201	H0031602 PW	3640	725
501	H0031602 PW	3640	65
201	H0031654 PW	3640	1,984
505	H0031654 PW	3640	8,287
201	H0031768 PW	3640	476
501	H0031768 PW	3640	1,400
201	H0031842 PW	3640	756
501	H0031842 PW	3640	173
505	H0031842 PW	3640	2,007
201	H0031872 PW	3640	632
501	H0031872 PW	3640	43
201	H0031925 PW	3640	1,400
505	H0031925 PW	3640	2,450
201	H0032149 PW	3640	3,844
501	H0032149 PW	3640	562
505	H0032149 PW	3640	7,875
201	H0032183 PW	3640	399
505	H0032183 PW	3640	1,500
201	H0032276 PW	3640	371
501	H0032276 PW	3640	1,076
201	H0032377 PW	3640	1,852
501	H0032377 PW	3640	216
201	H0032512 PW	3640	439
505	H0032512 PW	3640	181
201	H0032566 PW	3640	1,025
501	H0032566 PW	3640	86
505	H0032566 PW	3640	2,200
201	H0032762 PW	3640	4,137
501	H0032762 PW	3640	8,690
505	H0032762 PW	3640	5,700
201	H0033075 PW	3640	353
505	H0033075 PW	3640	990
201	H0033464 PW	3640	388
201	H0033850 PW	3640	1,237
501	H0033850 PW	3640	1,809
201	H0033929 PW	3640	1,395
201	H0034460 PW	3640	585
201	TD002465	3640	15
201	TD020584	3640	62
201	TD021632	3640	426
505	TD021632	3640	162
501	TD022203	3640	95,856
201	TD022512	3640	209
201	TD023074	3640	1,072
501	TD023074	3640	942
201	TD023164	3640	69
505	TD023164	3640	456
501	TD023791	3640	43
501	TD024385	3640	30,401
501	TD024386	3640	36,442
501	TD024423	3640	30,000
501	TD024470	3640	18,920
201	TD024511	3640	1,955
501	TD024527	3640	13,928
505	00000593 PW	3650	760
201	00001129 PW	3650	5
201	00001146 PW	3650	(13)
201	00001547 PW	3650	(109)
501	00001547 PW	3650	(1,875)
201	00001564 PW	3650	9,995
501	00001564 PW	3650	4,043
505	00001564 PW	3650	4,214
201	00001686 PW	3650	(245)
201	00001724 PW	3650	(23)
201	00001733 PW	3650	(194)
201	00001739 PW	3650	(119)
201	00001805 PW	3650	(45)
201	00001873 PW	3650	(39)

Expense Element	Work Order	Acct	State ITC Basis
201	00001902 PW	3650	(65)
201	00001907 PW	3650	(181)
201	00001934 PW	3650	(79)
501	00002021 PW	3650	516
201	00002033 PW	3650	372
201	00002425 PW	3650	(49)
201	00002426 PW	3650	(65)
201	00002493 PW	3650	(28)
201	00003307 PW	3650	541
501	00003307 PW	3650	180
201	00003817 PW	3650	(108)
501	00003817 PW	3650	(3,364)
201	00004840 PW	3650	110
505	00004840 PW	3650	72
201	00005236 PW	3650	69
501	00005236 PW	3650	54
201	00005931 PW	3650	57
505	00006089 PW	3650	(1,400)
201	00006333 PW	3650	531
201	00006445 PW	3650	34
501	00006445 PW	3650	18
201	00006565 PW	3650	69
501	00006565 PW	3650	90
201	00006599 PW	3650	(8)
501	00006599 PW	3650	(288)
201	00006908 PW	3650	7,676
501	00006908 PW	3650	1,084
505	00006908 PW	3650	15,528
201	00006934 PW	3650	(7)
201	00007216 PW	3650	1,815
501	00007216 PW	3650	263
505	00007216 PW	3650	2,566
201	00007488 PW	3650	136
201	00007557 PW	3650	297
501	00007557 PW	3650	270
201	00007612 PW	3650	199
201	00007636 PW	3650	161
501	00007636 PW	3650	76
201	00007650 PW	3650	(45)
201	00007659 PW	3650	54
201	00007678 PW	3650	106
501	00007678 PW	3650	18
501	00007683 PW	3650	36
501	00007684 PW	3650	72
201	00007745 PW	3650	54
201	00007747 PW	3650	1,625
501	00007747 PW	3650	3,329
201	00007761 PW	3650	14,635
201	00007774 PW	3650	3,428
501	00007774 PW	3650	1,330
201	00007848 PW	3650	2,335
501	00007848 PW	3650	459
505	00007848 PW	3650	1,834
201	00007870 PW	3650	109
201	00007876 PW	3650	54
201	00007882 PW	3650	109
201	00007886 PW	3650	31
201	00007900 PW	3650	35
501	00007900 PW	3650	36
201	00007947 PW	3650	255
501	00007947 PW	3650	228
201	00007963 PW	3650	12,391
505	00007963 PW	3650	30,818
201	00008004 PW	3650	163
201	00008007 PW	3650	6,167
501	00008007 PW	3650	1,110
505	00008007 PW	3650	3,801
201	00008017 PW	3650	163
201	00008076 PW	3650	35
501	00008076 PW	3650	54
501	00008084 PW	3650	(144)

Expense Element	Work Order	Acct	State ITC Basis
201	00008086 PW	3650	1,407
501	00008086 PW	3650	229
505	00008086 PW	3650	1,120
201	00008104 PW	3650	152
501	00008104 PW	3650	72
201	00008165 PW	3650	(28)
201	00008200 PW	3650	785
505	00008200 PW	3650	2,432
201	00008205 PW	3650	(39)
505	00008205 PW	3650	144
201	00008219 PW	3650	(61)
501	00008253 PW	3650	198
201	00008260 PW	3650	(100)
201	00008266 PW	3650	1,382
505	00008266 PW	3650	1,374
201	00008272 PW	3650	6,083
501	00008272 PW	3650	1,483
501	00008288 PW	3650	152
501	00008298 PW	3650	288
505	00008298 PW	3650	554
201	00008306 PW	3650	69
201	00008308 PW	3650	35
501	00008308 PW	3650	36
201	00008311 PW	3650	482
505	00008311 PW	3650	252
201	00008326 PW	3650	78
201	00008335 PW	3650	201
501	00008335 PW	3650	90
505	00008338 PW	3650	485
501	00008341 PW	3650	252
501	00008343 PW	3650	431
505	00008343 PW	3650	807
501	00008344 PW	3650	252
201	00008350 PW	3650	182
201	00008370 PW	3650	15
201	00008386 PW	3650	138
501	00008386 PW	3650	323
201	00008392 PW	3650	138
501	00008392 PW	3650	126
201	00008406 PW	3650	138
201	00008410 PW	3650	2,283
501	00008410 PW	3650	495
505	00008410 PW	3650	4,040
201	00008415 PW	3650	220
201	00008419 PW	3650	1,188
505	00008419 PW	3650	1,409
201	00008420 PW	3650	138
201	00008421 PW	3650	330
201	00008434 PW	3650	207
501	00008434 PW	3650	180
201	00008436 PW	3650	55
201	00008448 PW	3650	62
201	00008449 PW	3650	558
505	00008449 PW	3650	1,756
501	00008450 PW	3650	513
501	00008455 PW	3650	456
201	00008474 PW	3650	165
201	00008478 PW	3650	66
201	00008489 PW	3650	300
201	00008496 PW	3650	304
201	00008497 PW	3650	1,559
505	00008497 PW	3650	2,191
201	00008503 PW	3650	55
505	00008506 PW	3650	6,549
505	00008517 PW	3650	90
201	00008526 PW	3650	35
201	00008535 PW	3650	34
501	00008535 PW	3650	72
201	00008547 PW	3650	55
201	00008564 PW	3650	34
201	00008567 PW	3650	138

Expense Element	Work Order	Acct	State ITC Basis
201	00008569 PW	3650	1,384
505	00008569 PW	3650	1,168
201	00008574 PW	3650	1,913
505	00008574 PW	3650	1,604
201	00008575 PW	3650	110
501	00008575 PW	3650	542
201	00008576 PW	3650	153
201	00008587 PW	3650	732
505	00008587 PW	3650	1,490
201	00008588 PW	3650	51
501	00008588 PW	3650	36
201	00008590 PW	3650	175
201	00008593 PW	3650	1,372
501	00008593 PW	3650	500
505	00008593 PW	3650	1,836
201	00008605 PW	3650	34
201	00008618 PW	3650	110
501	00008618 PW	3650	54
201	00008621 PW	3650	247
201	00008625 PW	3650	35
501	00008625 PW	3650	18
201	00008632 PW	3650	325
201	00008636 PW	3650	62
201	00008640 PW	3650	35
501	00008640 PW	3650	18
201	00008657 PW	3650	72
201	00008663 PW	3650	453
501	00008663 PW	3650	90
201	00008675 PW	3650	337
501	00008675 PW	3650	108
201	00008676 PW	3650	106
501	00008676 PW	3650	72
201	00008679 PW	3650	106
201	00008684 PW	3650	194
501	00008684 PW	3650	144
201	00008689 PW	3650	138
201	00008693 PW	3650	1,301
505	00008693 PW	3650	828
201	00008698 PW	3650	55
201	00008702 PW	3650	496
201	00008709 PW	3650	242
501	00008709 PW	3650	108
201	00008729 PW	3650	212
501	00008729 PW	3650	130
201	00008730 PW	3650	36
201	00008738 PW	3650	1,191
501	00008738 PW	3650	200
505	00008738 PW	3650	2,500
201	00008745 PW	3650	237
201	00008771 PW	3650	120
201	00008772 PW	3650	206
501	00008772 PW	3650	216
201	00008778 PW	3650	36
501	00008778 PW	3650	108
201	00008779 PW	3650	1,805
501	00008779 PW	3650	151
505	00008779 PW	3650	1,550
201	00008796 PW	3650	55
201	00008802 PW	3650	254
201	00008803 PW	3650	103
201	00008806 PW	3650	36
201	00008835 PW	3650	119
501	00008835 PW	3650	86
201	00008840 PW	3650	99
501	00008840 PW	3650	108
201	00008862 PW	3650	55
201	00008872 PW	3650	165
501	00008872 PW	3650	544
201	00008875 PW	3650	250
201	00008882 PW	3650	100
201	00008884 PW	3650	1,633

Expense Element	Work Order	Acct	State ITC Basis
501	00008884 PW	3650	810
505	00008884 PW	3650	4,104
201	00008891 PW	3650	163
201	00008895 PW	3650	69
201	00008916 PW	3650	55
505	00008916 PW	3650	835
201	00008921 PW	3650	55
201	00008923 PW	3650	2,233
501	00008923 PW	3650	754
505	00008923 PW	3650	1,175
201	00008928 PW	3650	91
201	00008949 PW	3650	113
501	00008949 PW	3650	43
201	00008950 PW	3650	129
501	00008950 PW	3650	43
201	00008978 PW	3650	1,179
505	00008978 PW	3650	1,748
201	00008994 PW	3650	165
201	00009032 PW	3650	207
201	00009042 PW	3650	1,695
501	00009042 PW	3650	3,209
201	00009043 PW	3650	1,840
201	00009049 PW	3650	137
501	00009049 PW	3650	86
201	00009050 PW	3650	38
201	00009072 PW	3650	502
501	00009072 PW	3650	303
201	00009080 PW	3650	64
505	00009080 PW	3650	476
201	00009097 PW	3650	147
501	00009097 PW	3650	86
201	00009132 PW	3650	58
501	00009137 PW	3650	136
201	00009177 PW	3650	191
201	00009180 PW	3650	164
201	00009200 PW	3650	61
201	00009209 PW	3650	1,430
201	00009216 PW	3650	364
201	00009220 PW	3650	202
201	00009229 PW	3650	61
505	00009229 PW	3650	816
201	00009255 PW	3650	43
201	00009261 PW	3650	61
201	EE000196 PW	3650	908
505	EE000196 PW	3650	700
201	EE000445 PW	3650	6,343
205	EE000445 PW	3650	7
505	EE000445 PW	3650	5,804
501	EE000584 PW	3650	513
201	EE000654 PW	3650	5,308
505	EE000654 PW	3650	26,250
201	EE000662 PW	3650	5,106
501	EE000662 PW	3650	1,222
505	EE000662 PW	3650	3,375
201	EE000677 PW	3650	816
501	EE000677 PW	3650	144
505	EE000677 PW	3650	2,795
501	EE000680 PW	3650	105
201	EE000694 PW	3650	25
505	EE000694 PW	3650	8,282
201	EE000708 PW	3650	1,640
501	EE000708 PW	3650	371
505	EE000708 PW	3650	3,865
501	EE000710 PW	3650	180
201	EE000779 PW	3650	4,897
505	EE000779 PW	3650	2,975
201	EE000802 PW	3650	727
501	EE000802 PW	3650	1,217
505	EE000802 PW	3650	2,294
201	EE000805 PW	3650	686
501	EE000805 PW	3650	266

Expense Element	Work Order	Acct	State ITC Basis
505	EE000805 PW	3650	980
505	EE000806 PW	3650	1,305
201	EE000828 PW	3650	3,121
505	EE000828 PW	3650	17,999
505	EE000834 PW	3650	3,045
201	EE000862 PW	3650	1,172
505	EE000862 PW	3650	4,115
201	EE000870 PW	3650	506
501	EE000870 PW	3650	130
505	EE000870 PW	3650	1,186
201	EE000872 PW	3650	1,777
501	EE000872 PW	3650	180
505	EE000872 PW	3650	1,400
201	EE000875 PW	3650	10,793
501	EE000875 PW	3650	913
201	EE000876 PW	3650	3,624
501	EE000876 PW	3650	270
505	EE000876 PW	3650	1,985
201	EE000883 PW	3650	1,794
201	EE000895 PW	3650	2,645
505	EE000895 PW	3650	12,066
201	EE000898 PW	3650	1,114
505	EE000898 PW	3650	1,960
201	EE000905 PW	3650	3,273
501	EE000905 PW	3650	180
505	EE000905 PW	3650	2,280
201	EE000916 PW	3650	534
505	EE000916 PW	3650	1,719
201	EE000920 PW	3650	7,118
505	EE000920 PW	3650	1,540
201	EE000924 PW	3650	1,104
501	EE000924 PW	3650	198
505	EE000924 PW	3650	1,377
201	EE000928 PW	3650	1,603
501	EE000928 PW	3650	245
505	EE000928 PW	3650	2,295
201	EE000950 PW	3650	2,897
501	EE000950 PW	3650	4,666
505	EE000950 PW	3650	3,682
201	EE000969 PW	3650	1,308
201	EE000969 PW	3650	5,852
501	EE000969 PW	3650	605
201	EE000977 PW	3650	1,358
501	EE000977 PW	3650	3,222
201	EE000978 PW	3650	1,696
501	EE000978 PW	3650	130
201	EE000983 PW	3650	1,060
501	EE000983 PW	3650	173
201	EE000992 PW	3650	3,149
501	EE000992 PW	3650	486
201	EE000997 PW	3650	7,081
501	EE000997 PW	3650	692
505	EE000997 PW	3650	5,189
201	EE001012 PW	3650	1,327
501	EE001012 PW	3650	367
201	EE001013 PW	3650	1,451
501	EE001013 PW	3650	555
505	EE001013 PW	3650	1,113
201	EE001014 PW	3650	1,727
501	EE001014 PW	3650	1,780
201	EE001037 PW	3650	1,647
501	EE001037 PW	3650	173
505	EE001037 PW	3650	1,725
201	EE001048 PW	3650	2,015
505	EE001048 PW	3650	816
521	EE025729	3650	56
201	EE060310	3650	449
505	EE060310	3650	3,240
201	EE066024	3650	508
201	EE067163	3650	2,667
505	EE067163	3650	8,109

Expense Element	Work Order	Acct	State ITC Basis
201	EE067185	3650	1,905
505	EE067185	3650	16,321
201	EE068300	3650	19
501	EE068300	3650	72
505	EE068300	3650	600
201	EE069455	3650	950
505	EE069455	3650	2,349
201	EE076456	3650	615
505	EE076456	3650	15,454
201	EE077614	3650	1,071
505	EE077614	3650	4,646
201	EE078271	3650	503
505	EE078271	3650	61,208
201	EE080119	3650	394
201	EE080443	3650	2,100
505	EE080443	3650	15,788
201	EE080753	3650	120
505	EE080753	3650	144
201	EE081189	3650	725
201	EE081396	3650	960
505	EE081396	3650	2,080
201	EE081543	3650	277
505	EE081543	3650	108
201	EE083754	3650	109
201	EE084220	3650	4,197
505	EE084220	3650	7,006
201	EE085016	3650	(62)
501	EE085016	3650	108
505	EE085016	3650	390
201	EE085177	3650	2,327
505	EE085177	3650	9,208
201	EE086344	3650	820
505	EE086344	3650	7,538
201	EE086835	3650	152
201	EE086856	3650	1,737
505	EE086856	3650	4,376
201	EE088331	3650	918
505	EE088331	3650	2,292
201	EE088492	3650	452
201	EE089658	3650	4,902
505	EE089658	3650	4,879
201	EE090006	3650	235
505	EE090006	3650	5,615
201	EE093081	3650	101
201	H0000705	3650	26,778
505	H0000705	3650	385,230
201	H0000835	3650	10,043
201	H0000835	3650	9,977
205	H0000835	3650	132
501	H0000835	3650	539
505	H0000835	3650	2,372
201	H0001128	3650	10,159
205	H0001128	3650	267
505	H0001128	3650	10,709
201	H0001262	3650	79,863
501	H0001262	3650	14,337
505	H0001262	3650	38,741
505	H0001343	3650	1,740
201	H0001469	3650	8,678
505	H0001469	3650	6,305
201	H0001489	3650	1,609
501	H0001489	3650	2,500
505	H0001489	3650	3,937
201	H0001491	3650	4,424
201	H0001494	3650	2,105
501	H0001494	3650	6,508
201	H0001519	3650	13
201	H0001519	3650	1,403
205	H0001519	3650	192
501	H0001519	3650	3,515
505	H0001519	3650	23,163

Expense Element	Work Order	Acct	State ITC Basis
201	H0001530	3650	4,644
201	H0001534	3650	789
505	H0001534	3650	10,035
501	H0003039 PW	3650	7,000
201	H0005269 PW	3650	60,738
501	H0005269 PW	3650	87,566
505	H0005269 PW	3650	36,543
201	H0013333 PW	3650	1,958
505	H0013333 PW	3650	2,758
201	H0014425 PW	3650	-
201	H0017531 PW	3650	2,479
205	H0017531 PW	3650	7
501	H0017531 PW	3650	549
505	H0017531 PW	3650	1,500
201	H0018386 PW	3650	96,075
205	H0018386 PW	3650	704
501	H0018386 PW	3650	176,609
201	H0023266 PW	3650	1,173
501	H0023266 PW	3650	144
505	H0023266 PW	3650	2,600
201	H0024411 PW	3650	5,578
501	H0024411 PW	3650	806
505	H0024411 PW	3650	1,959
201	H0024849 PW	3650	216
505	H0024849 PW	3650	7,456
201	H0024904 PW	3650	59
505	H0024904 PW	3650	180
201	H0024980 PW	3650	1,621
201	H0025734 PW	3650	3,064
501	H0025734 PW	3650	180
505	H0025734 PW	3650	4,629
201	H0025876 PW	3650	2,401
505	H0025876 PW	3650	9,846
201	H0026122 PW	3650	388
201	H0026517 PW	3650	356
505	H0026517 PW	3650	1,148
201	H0027009 PW	3650	266
501	H0027009 PW	3650	72
505	H0027045 PW	3650	6,765
201	H0027251 PW	3650	2,090
501	H0027316 PW	3650	144
505	H0027316 PW	3650	3,743
501	H0027323 PW	3650	144
201	H0027607 PW	3650	996
505	H0027607 PW	3650	4,000
201	H0027732 PW	3650	304
201	H0027767 PW	3650	750
201	H0028159 PW	3650	221
201	H0028306 PW	3650	884
505	H0028306 PW	3650	3,010
201	H0028352 PW	3650	2,962
501	H0028352 PW	3650	323
505	H0028352 PW	3650	3,901
201	H0028537 PW	3650	4,447
501	H0028537 PW	3650	346
201	H0028588 PW	3650	1,728
501	H0028588 PW	3650	1,344
505	H0028588 PW	3650	2,450
201	H0028767 PW	3650	2,006
501	H0028767 PW	3650	180
505	H0028767 PW	3650	3,790
201	H0028922 PW	3650	233
201	H0029275 PW	3650	311
505	H0029275 PW	3650	688
201	H0029533 PW	3650	1,027
501	H0029533 PW	3650	144
505	H0029533 PW	3650	4,700
201	H0029906 PW	3650	925
501	H0029906 PW	3650	108
505	H0029906 PW	3650	3,750
201	H0030081 PW	3650	259

Expense Element	Work Order	Acct	State ITC Basis
505	H0030081 PW	3650	1,148
201	H0030305 PW	3650	69
501	H0030305 PW	3650	144
201	H0030335 PW	3650	459
505	H0030335 PW	3650	3,518
201	H0030429 PW	3650	1,674
201	H0030547 PW	3650	281
505	H0030547 PW	3650	781
201	H0030619 PW	3650	1,529
501	H0030619 PW	3650	324
505	H0030619 PW	3650	2,215
201	H0030815 PW	3650	755
501	H0030815 PW	3650	144
505	H0030815 PW	3650	2,165
201	H0030819 PW	3650	1,469
505	H0030819 PW	3650	19,722
201	H0030926 PW	3650	1,482
505	H0030926 PW	3650	4,456
201	H0030951 PW	3650	5,856
505	H0030951 PW	3650	67,944
201	H0031027 PW	3650	1,916
501	H0031027 PW	3650	2,773
201	H0031447 PW	3650	192
501	H0031447 PW	3650	216
505	H0031447 PW	3650	390
201	H0031450 PW	3650	285
201	H0032474 PW	3650	940
501	H0032474 PW	3650	1,877
201	H0032581 PW	3650	1,833
501	H0032581 PW	3650	2,598
201	H0033274 PW	3650	350
505	H0033274 PW	3650	385
201	H0033537 PW	3650	308
201	H0033749 PW	3650	3,239
501	H0033749 PW	3650	1,458
201	TD020573	3650	284
501	TD020573	3650	90
201	TD021983	3650	(28)
201	TD022048	3650	(149)
201	TD022271	3650	276
505	TD022587	3650	36
201	TD023123	3650	149
501	TD023123	3650	204
201	TD023249	3650	36
501	EE010463	3660	114
201	EE056066	3660	(532)
505	EE067524	3660	81,089
201	H0019313 PW	3660	956
201	00002086 PW	3670	(51)
201	00005525 PW	3670	(14,529)
501	00005525 PW	3670	1,021
505	00005525 PW	3670	10,421
201	00006984 PW	3670	3,922
201	00006984 PW	3670	145
505	00006984 PW	3670	18,322
201	00007648 PW	3670	78
201	00008065 PW	3670	(363)
505	00008065 PW	3670	(3,125)
201	00008160 PW	3670	(163)
201	00008214 PW	3670	1,845
201	00008337 PW	3670	181
201	00008401 PW	3670	7,965
505	00008401 PW	3670	1,650
201	00008753 PW	3670	4,393
201	00009133 PW	3670	529
201	EE058398	3670	7,565
501	EE058398	3670	970
201	EE059268	3670	3,128
505	EE059268	3670	51,429
201	EE064058	3670	(12,059)
501	EE064058	3670	(342)

Expense Element	Work Order	Acct	State ITC Basis
201	EE065434	3670	181
201	EE070137	3670	24,563
501	EE070137	3670	24,392
201	EE072089	3670	429
201	EE072145	3670	787
201	EE073074	3670	1,069
201	EE073550	3670	189
201	EE073666	3670	800
201	EE075708	3670	14,635
505	EE077558	3670	13,367
201	EE078325	3670	40,496
205	EE078325	3670	120
505	EE078325	3670	96,658
505	EE078404	3670	26,546
505	EE079032	3670	57,708
201	EE079311	3670	(17)
201	EE079786	3670	1,856
201	EE079787	3670	55
201	EE081025	3670	961
201	EE081880	3670	1,104
201	EE083122	3670	1,374
201	EE083807	3670	2,192
201	EE085187	3670	8,060
201	EE085188	3670	2,746
201	EE085272	3670	1,537
201	EE085314	3670	2,184
201	EE086227	3670	2,501
201	EE086306	3670	416
201	EE086633	3670	2,706
505	EE086633	3670	39,866
201	EE086645	3670	957
505	EE086645	3670	2,285
201	EE086979	3670	325
201	EE087263	3670	601
501	EE087263	3670	173
201	EE087575	3670	49,431
505	EE087575	3670	83,054
201	EE087722	3670	292
201	EE089809	3670	9,343
505	EE089809	3670	906
201	EE091341	3670	700
201	EE091737	3670	1,296
201	EE091805	3670	1,310
201	EE092502	3670	913
201	EE092503	3670	602
201	EE093845	3670	88
201	EE094000	3670	139
201	EE743748	3670	905
201	H0000342	3670	(3,249)
501	H0000648	3670	1,900
505	H0000648	3670	38,008
201	H0000700	3670	8,372
505	H0000700	3670	179,994
201	H0000955	3670	12,617
201	H0001051	3670	354
501	H0001051	3670	1,190
201	H0001058	3670	(133)
201	H0001112	3670	(33)
501	H0001121	3670	3,824
505	H0001121	3670	114,124
201	H0001146	3670	24,821
505	H0001146	3670	283,078
201	H0001232	3670	92
201	H0001235	3670	8,181
201	H0001249	3670	29,270
201	H0001249	3670	69,523
501	H0001249	3670	539
505	H0001249	3670	263,571
201	H0001265	3670	32,587
201	H0001266	3670	663
201	H0001270	3670	76,643

Expense Element	Work Order	Acct	State ITC Basis
201	H0001270	3670	20,013
501	H0001270	3670	76,500
505	H0001270	3670	23,930
201	H0001284	3670	96,849
201	H0001296	3670	722
505	H0001296	3670	50,465
201	H0001308	3670	111
201	H0001313	3670	35,216
505	H0001313	3670	86,780
201	H0001319	3670	5,810
501	H0001319	3670	7,601
505	H0001319	3670	56,737
201	H0001327	3670	(967)
501	H0001327	3670	305
505	H0001327	3670	216
201	H0001329	3670	17,343
501	H0001336	3670	59,853
505	H0001336	3670	30,875
201	H0001337	3670	98
505	H0001337	3670	86,713
201	H0001342	3670	666
201	H0001342	3670	149
201	H0001342	3670	72,907
505	H0001342	3670	50,426
505	H0001345	3670	25,814
201	H0001360	3670	69,401
505	H0001360	3670	506,363
201	H0001417	3670	8,542
201	H0001418	3670	47,192
201	H0001419	3670	12,554
201	H0001419	3670	15,541
201	H0001420	3670	7,452
201	H0001438	3670	6,234
201	H0001442	3670	44,027
201	H0001443	3670	46,596
505	H0001443	3670	74,664
201	H0001444	3670	14,635
201	H0001444	3670	69,104
501	H0001444	3670	456
201	H0001445	3670	14,635
201	H0001445	3670	34,644
505	H0001445	3670	126,465
201	H0001450	3670	12,823
201	H0001453	3670	18,461
201	H0001455	3670	15,592
201	H0001462	3670	26,620
201	H0001462	3670	43,234
501	H0001462	3670	342
505	H0001462	3670	43,099
201	H0001470	3670	14,489
201	H0001470	3670	201,498
505	H0001470	3670	95,522
201	H0001471	3670	10,602
505	H0001471	3670	52,047
201	H0001473	3670	16,501
201	H0001474	3670	16,172
505	H0001474	3670	276
201	H0001475	3670	14,635
201	H0001475	3670	59,563
501	H0001475	3670	4,987
505	H0001475	3670	58,576
521	H0001475	3670	504
522	H0001475	3670	1,680
201	H0001477	3670	14,635
201	H0001477	3670	71,687
201	H0001482	3670	3,776
505	H0001482	3670	725
201	H0001484	3670	29,270
201	H0001484	3670	166,979
501	H0001484	3670	1,514
505	H0001484	3670	73,246

Expense Element	Work Order	Acct	State ITC Basis
521	H0001484	3670	924
201	H0001495	3670	14,635
201	H0001495	3670	19,819
201	H0001496	3670	13,006
201	H0001499	3670	5,085
505	H0001499	3670	816
201	H0001500	3670	9,792
505	H0001500	3670	906
201	H0001509	3670	4,799
505	H0001509	3670	363
201	H0001514	3670	13
201	H0001514	3670	6,773
205	H0001514	3670	306
501	H0001514	3670	3,515
201	H0001515	3670	4,461
505	H0001515	3670	816
201	H0001520	3670	6,083
505	H0001520	3670	816
201	H0001524	3670	15,781
201	H0001535	3670	3,266
201	H0001539	3670	23,431
201	H0001540	3670	19,737
201	H0001544	3670	14,411
201	H0001545	3670	12,268
201	H0017156 PW	3670	68
201	H0017219 PW	3670	33,490
201	H0017219 PW	3670	59,981
201	H0018087 PW	3670	(12,268)
201	H0018683 PW	3670	(26,620)
201	H0018684 PW	3670	14,635
505	H0018684 PW	3670	19,388
201	H0019003 PW	3670	(14,635)
201	H0019003 PW	3670	(68,572)
501	H0019003 PW	3670	(456)
505	H0019232 PW	3670	3,610
201	H0021447 PW	3670	(10,361)
201	H0021897 PW	3670	214
201	H0022118 PW	3670	14,635
201	H0023261 PW	3670	1,733
501	H0023261 PW	3670	413
201	H0023422 PW	3670	4,924
201	H0024712 PW	3670	7,158
501	H0024712 PW	3670	497
201	H0025029 PW	3670	26
201	H0025030 PW	3670	26
201	H0025114 PW	3670	39
201	H0025226 PW	3670	3,743
201	H0026387 PW	3670	10,461
201	H0026642 PW	3670	30
201	H0027172 PW	3670	3,007
201	H0027719 PW	3670	1,313
201	H0028245 PW	3670	8,178
505	H0028245 PW	3670	7,604
201	H0028443 PW	3670	(373)
201	H0028789 PW	3670	662
201	H0029577 PW	3670	1,493
205	H0029577 PW	3670	2,031
201	H0030957 PW	3670	657
201	H0031024 PW	3670	1,813
201	H0031210 PW	3670	400
201	H0031232 PW	3670	4,775
201	H0031639 PW	3670	1,824
201	H0032528 PW	3670	5,630
205	TD003756	3670	(224)
201	10021	3680	2,657,678
501	10021	3680	3,007
201	00007473 PW	3680	89
201	00008236 PW	3680	63
501	00008255 PW	3680	144
201	00008624 PW	3680	110
501	00008624 PW	3680	94

Expense Element	Work Order	Acct	State ITC Basis
501	00008739 PW	3680	43
201	EE072128	3680	(11)
505	EE072128	3680	54
201	EE080340	3680	(25)
505	EE080340	3680	1,017
201	10001	3691	7,035
505	00004995 PW	3691	629
201	00005495 PW	3691	6,340
501	00005495 PW	3691	2,422
505	00005495 PW	3691	3,254
201	00007974 PW	3691	73
201	00008627 PW	3691	68
501	00008627 PW	3691	742
201	00008685 PW	3691	194
501	00008737 PW	3691	698
505	00008737 PW	3691	228
201	00008820 PW	3691	386
501	00008820 PW	3691	281
505	00008820 PW	3691	1,979
505	00009037 PW	3691	408
201	00009106 PW	3691	124
501	00009106 PW	3691	625
201	EE000770 PW	3691	311
505	EE000770 PW	3691	1,186
201	EE000867 PW	3691	859
505	EE000867 PW	3691	6,695
201	EE000892 PW	3691	7,886
505	EE000892 PW	3691	5,955
201	EE000944 PW	3691	2,166
501	EE000944 PW	3691	8,250
505	EE000944 PW	3691	48,011
501	H0000138 PW	3691	213
201	H0001289	3691	1,394
201	H0001289	3691	25,189
501	H0001289	3691	48,123
201	H0001301	3691	7,827
505	H0001301	3691	44,509
201	H0001431	3691	7,742
501	H0001431	3691	144
505	H0001431	3691	12,300
201	H0001490	3691	7,221
501	H0001490	3691	3,192
505	H0001490	3691	11,355
201	H0004872 PW	3691	(39)
501	H0004872 PW	3691	(492)
201	H0012069 PW	3691	3,186
501	H0012069 PW	3691	1,085
505	H0012069 PW	3691	55,118
201	H0021471 PW	3691	6,590
501	H0021471 PW	3691	1,809
501	H0024245 PW	3691	456
505	H0024245 PW	3691	4,800
201	H0026137 PW	3691	3,726
505	H0026137 PW	3691	8,554
201	H0026578 PW	3691	896
501	H0026578 PW	3691	288
505	H0026578 PW	3691	3,844
201	H0027792 PW	3691	181
501	H0027792 PW	3691	72
201	H0027873 PW	3691	1,550
501	H0027873 PW	3691	144
505	H0027873 PW	3691	1,850
201	H0028674 PW	3691	68
201	H0028699 PW	3691	182
201	H0029074 PW	3691	351
201	H0029095 PW	3691	129
201	H0029350 PW	3691	519
201	H0029372 PW	3691	4,469
501	H0029372 PW	3691	4,823
505	H0029372 PW	3691	431
201	H0029427 PW	3691	5,731

Expense Element	Work Order	Acct	State ITC Basis
501	H0029427 PW	3691	519
505	H0029427 PW	3691	2,250
201	H0030088 PW	3691	52
201	H0030150 PW	3691	551
505	H0030150 PW	3691	6,084
201	H0030361 PW	3691	264
201	H0030388 PW	3691	209
501	H0030388 PW	3691	72
201	H0030691 PW	3691	75
505	H0030691 PW	3691	989
505	H0031545 PW	3691	704
201	H0031580 PW	3691	407
505	H0031580 PW	3691	11,983
201	H0031730 PW	3691	198
201	H0032329 PW	3691	174
201	H0033014 PW	3691	256
201	H0033130 PW	3691	3,765
501	H0033130 PW	3691	3,932
201	H0033208 PW	3691	208
201	H0033296 PW	3691	288
201	H0033309 PW	3691	917
201	H0034630 PW	3691	371
501	H0034630 PW	3691	151
505	H0034630 PW	3691	1,250
501	TD013752	3691	158
501	TD020675	3691	273
201	TD024005	3691	3,961
501	TD024005	3691	1,823
201	TD024007	3691	3,876
501	TD024007	3691	843
201	00008592 PW	3692	67
201	00008637 PW	3692	392
505	00008637 PW	3692	2,771
501	H0000002 PW	3692	18,544
201	H0008286 PW	3692	748
501	H0008286 PW	3692	1,195
505	H0008286 PW	3692	220,825
201	H0014420 PW	3692	19,683
501	H0014420 PW	3692	5,534
505	H0014420 PW	3692	13,113
201	H1000000	3692	165,140
205	H1000000	3692	94
501	H1000000	3692	21,129
505	H1000000	3692	174,721
521	H1000000	3692	315
201	H1002000	3692	147,627
205	H1002000	3692	42
501	H1002000	3692	57,517
505	H1002000	3692	307,828
201	H1003000	3692	57,777
201	H1003000	3692	227,424
501	H1003000	3692	68,464
505	H1003000	3692	150,733
521	H1003000	3692	1,036
205	CS000005 PW	3700	25
201	FI000030 PW	3700	12,455
201	FI000848	3700	115,180
501	FI000848	3700	321
201	SS002023	3700	230,957
205	SS002023	3700	652
501	SS002023	3700	320
521	SS002023	3700	170
201	SS002087	3700	6,510
201	EE061978	3900	195
501	EE061978	3900	19
501	EE061978	3900	1,215
201	EE067805	3900	1,641
201	EE067805	3900	8,035
201	EE082789	3900	6,287
501	EE082789	3900	2,167
201	EE089241	3900	12,485

Expense Element	Work Order	Acct	State ITC Basis
201	EE089547	3900	479
201	EE089547	3900	(120)
201	FI001044	3900	417
201	FI001044	3900	(17)
201	H0001344	3900	5,100
201	H0001344	3900	18,730
205	H0001344	3900	452
201	H1001000	3900	331,384
205	H1001000	3900	979
501	H1001000	3900	7,544
521	H1001000	3900	2,019
522	H1001000	3900	39
201	IS000108	3900	33
201	IS000115	3900	8,227
201	PR014312	3900	2,763
201	PR015139	3900	1,305
201	PR015460	3900	2,596
201	AD000420	3911	2,560
201	AD000423	3911	8,024
501	CS000639	3911	200
201	CS000727	3911	2,020
501	CS000727	3911	298
205	CS000917	3911	469
201	CS000955	3911	(125)
201	CS000955	3911	2,454
205	ES000005	3911	427
201	FI001052	3911	2,287
201	FI001086	3911	8,686
201	IS000109	3911	4,737
201	IS000109	3911	23,418
501	IS000109	3911	2,269
201	IS000117	3911	29,620
201	IS000118	3911	59,577
201	IS000122	3911	2,302
201	IS000122	3911	16,400
501	IS000122	3911	8,995
201	PR013869	3911	12,553
501	PR013869	3911	5,121
201	SF000122	3911	5,239
201	SF000128	3911	5,239
201	SS002088	3911	1,249
201	TD021880	3911	2,384
201	TD021880	3911	85
201	H0001415	3912	156
201	H0001415	3912	15,974
201	CS000973	3913	693
501	CS000973	3913	99
201	PR015372	3913	1,010
201	PR015418	3913	2,053
201	AD000405	3920	83,328
201	AD000406	3920	79,891
223	AD000406	3920	79,891
201	LA000383	3920	(863)
201	LA000475	3920	(2,197)
201	LA000486	3920	156,572
201	H0001141	3942	8,376
201	H0001141	3942	(161)
201	H0001169	3942	24,955
201	H0001347	3942	8,179
201	H0001348	3942	38,953
201	H0001349	3942	40,669
201	SS001960	3942	3,796
201	TD020595	3942	2
201	TD020595	3942	1,826
201	TD021141	3942	4,148
201	TD021142	3942	945
205	TD021609	3942	1,004
201	TD021780	3942	11,685
201	TD021850	3942	29,633
201	TD021884	3942	1,236
201	TD022056	3942	13,728

Expense Element	Work Order	Acct	State ITC Basis
505	TD022074	3942	21,504
201	TD023106	3942	2,300
201	TD023210	3942	528
201	TD023266	3942	2,375
201	TD023267	3942	3,514
201	TD023268	3942	2,906
201	TD023269	3942	1,848
201	TD023270	3942	3,228
201	TD023271	3942	5,177
201	TD023272	3942	3,723
201	TD023273	3942	2,094
201	TD023274	3942	3,085
201	TD023275	3942	1,562
201	TD023276	3942	896
201	TD023277	3942	3,245
201	TD023280	3942	404
201	TD023319	3942	5,144
201	TD023401	3942	3,875
201	TD023402	3942	4,194
201	TD023414	3942	21,504
201	TD024152	3942	3,006
201	TD024153	3942	20,505
201	TD024154	3942	9,354
201	TD024155	3942	5,600
201	TD024156	3942	5,483
201	TD024157	3942	4,306
201	TD024300	3942	5,980
201	TD024357	3942	1,718
205	TD024357	3942	165
201	TD024360	3942	2,960
201	TD024406	3942	1,699
201	TD024548	3942	3,122
201	00008519 PW	3970	1,992
205	00008519 PW	3970	240
201	EE000754 PW	3970	837
201	EE000754 PW	3970	721
205	EE000754 PW	3970	152
501	EE000754 PW	3970	60,745
201	EE000856 PW	3970	8,476
201	EE067989	3970	5,019
201	EE090782	3970	3,089
201	EE091093	3970	2,710
201	H0000454	3970	34,068
201	H0000454	3970	15,454
205	H0000454	3970	984
501	H0000454	3970	37,457
506	H0000454	3970	20,621
201	H0000455	3970	91,810
201	H0000455	3970	(601)
201	H0000455	3970	909
205	H0000455	3970	509
501	H0000455	3970	22,463
505	H0000455	3970	7,650
506	H0000455	3970	6,521
506	H0000455	3970	785
521	H0000455	3970	224
201	H0000456	3970	19,730
205	H0000456	3970	121
205	H0000456	3970	132
501	H0000456	3970	39
521	H0000456	3970	54
201	H0000646	3970	5,271
501	H0000646	3970	779
501	H0000646	3970	8,778
205	H0000848	3970	299
201	H0000852	3970	764
201	H0000852	3970	22,585
201	H0000852	3970	(4)
205	H0000852	3970	621
501	H0000852	3970	820
505	H0000852	3970	825

Expense Element	Work Order	Acct	State ITC Basis
506	H0000852	3970	801
521	H0000852	3970	644
570	H0000852	3970	563
201	H0001033	3970	1,375
201	H0001033	3970	28,448
205	H0001033	3970	76
201	H0001034	3970	23,709
205	H0001034	3970	64
201	H0001035	3970	35,089
201	H0001035	3970	(18)
201	H0001035	3970	87
205	H0001035	3970	671
501	H0001035	3970	11,100
201	H0001036	3970	19
201	H0001036	3970	27,148
205	H0001036	3970	1,077
201	H0001037	3970	19
201	H0001037	3970	37,440
205	H0001037	3970	57
201	H0001038	3970	26,816
205	H0001038	3970	100
501	H0001038	3970	174
521	H0001038	3970	56
501	H0001140	3970	12,851
201	H0001148	3970	653
201	H0001148	3970	8,363
201	H0001195	3970	2,719
201	H0001195	3970	76,184
205	H0001195	3970	9
201	H0001356	3970	50,209
205	H0001356	3970	114
501	H0001356	3970	7,330
521	H0001356	3970	56
201	H0001378	3970	69,994
205	H0001378	3970	205
501	H0001378	3970	981
521	H0001378	3970	672
201	H0001454	3970	6,447
201	H0001454	3970	16,419
205	H0001454	3970	109
501	H0001454	3970	234
521	H0001454	3970	344
205	H0001493	3970	415
201	H3126000	3970	734
501	H3126000	3970	78,346
502	H3126000	3970	5,169
505	H3126000	3970	212,598
201	IS000119	3970	21,648
205	SS000023 PW	3970	25
201	SS000032 PW	3970	3,921
201	SS000034 PW	3970	5,451
205	SS000034 PW	3970	136
201	SS000035 PW	3970	5,451
201	SS000036 PW	3970	3,652
205	SS000036 PW	3970	62
201	SS000038 PW	3970	3,165
201	SS000044 PW	3970	526
201	SS000045 PW	3970	526
201	SS000046 PW	3970	125
201	SS000046 PW	3970	542
201	SS000047 PW	3970	3,465
201	SS000048 PW	3970	3,465
505	SS001668	3970	(1,475)
501	SS001729	3970	(2,185)
201	SS001894	3970	313
201	SS002001	3970	966
505	SS002001	3970	730
201	SS002006	3970	1,992
501	SS002033	3970	662
501	SS002036	3970	738
201	SS002038	3970	3,640

Expense Element	Work Order	Acct	State ITC Basis
501	SS002038	3970	1,035
201	SS002051	3970	21,246
201	AD000381	3980	11,249
201	EE080547	3980	1,487
201	EE090000	3980	274
201	EE090000	3980	588
501	SF000123	3980	133,512
201	SF000124	3980	21
201	SF000124	3980	15,992
201	SF000125	3980	4,605
201	TD023621	3980	2,083
201	TD023621	3980	27,082
201	TD023621	3980	128
501	TD023621	3980	19,065
201	PR014607		1,516
201	PR014711		382
201	PR014740		374
201	PR014741		406
201	PR015025		645
201	PR015026		744
	2006 Qualifying Projects		28,558,655
	Less: Embedded Overhead in Inventory		(486,423)
	State ITC Basis, Net of Adjustments		28,072,232
	State ITC Rate		4%
	Gross State ITC		1,122,889
	Less: State ITC Recapture		(1,755)
	2006 Vintage State ITC, net of recapture		1,121,134
			CA-SIR-18, page 7

CA-SIR-19

Ref: HELCO Response to CA-IR-439, part c (Schedule H).

Regarding the statement, "If Schedule H customers are required to migrate onto another service schedule, these customers can anticipate higher billed demand because Schedule H billing kW exclusions will be eliminated." Please provide the following information.

a. Were the Schedule H "billing kW exclusions" initially implemented as a promotional or competitive response rate that was targeted to certain customer end-uses of energy?
b. If the response to part (a) of this information request is affirmative, please identify and describe the rationale at that time for promoting certain end-uses and explain whether such rationale exists today.
c. If the response to part (a) of this information request is negative, state each known reason for implementation of billing exclusions for certain types of loads.
d. Explain whether any cost of service justification exists today to support billing exclusions for any identified HELCO end-uses of energy, including those contained within Schedule H.
e. Provide complete copies of all workpapers, studies, reports, analyses and other documents associated with the responses to parts (a) through (d) of this information request.

HELCO Response:

a. It is not clear whether the Schedule H billing kW exclusions based on the determination of connected load were initially implemented as a promotional or competitive response rate. The "Determination of Connected Load" section of the rate, which includes the exclusions for cooking and water heating load, is a modification of Schedule H that became effective on June 1, 1974. However, prior to that date, the Schedule H rate did exist and did apply only to commercial cooking, heating, air conditioning, and refrigeration service as it does today. It is possible that, if there was indeed a promotional element reflected in the pricing of Schedule H rates, that it focused on Schedule H end-uses long before the kW exclusions became a part of the rate.

b. Not applicable.

c. Not applicable.

d. HELCO is not able to identify or explain whether any cost of service justification exists

today to support billing exclusions for any identified HELCO end-uses of energy. The HELCO cost-of-service study identifies total costs, but does not identify costs by end-uses of energy. HELCO also does not have any separate cost studies for end-uses of energy, including those applicable in Schedule H.

e. There are none associated with the above responses.

CA-SIR-20

Ref: HELCO Responses to CA-IR-441, 442 and 443, part a (TOU Meter Cost Differentials).

In responding to part (a), no information was provided regarding cost differences associated with installing TOU meters versus non-TOU meters. In contrast, in responding to CA-IR-440 part a, regarding residential TOU meter costs, specific costing information from the HECO rate case was referenced. Please provide the following information:

a. State whether the cited $4 and $10 customer charge differentials for Schedules G, J and P are intended to be related to differentials in cost incurred to meter or bill customers on a TOU basis;
b. If the response to part (a) of this information request is affirmative, provide copies of cost information relevant to the proposed additional customers charges for each rate schedule; and
c. If the response to part (a) of this information request is negative, please provide all analyses, workpapers and other information relied upon to determine the customer charge differentials.

HELCO Response:

a. The proposed customer charge differentials of $4 between Schedule G and Schedule TOU-G, and $10 between both Schedule J and Schedule TOU-J, and Schedule P and Schedule TOU-P are not intended to be related to differentials in cost incurred to meter or bill customers on a TOU basis. The proposed $10 difference for Schedule J and Schedule P TOU customers is the same as what HELCO currently charges commercial customers for TOU metering on optional Rider M and Rider T, as indicated in HELCO's response to CA-IR-442 and CA-IR-443. The proposed $4 difference for Schedule G TOU customers is simply 40% of the existing $10 TOU metering charge, as indicated in HELCO's response to CA-IR-441.

b. Not applicable.

c. See the response to part a. above.

CA-SIR-21

Ref: HELCO Responses to CA-IR-221, 317 and 318 (Miscellaneous Revenues).

Regarding each of the following HECO-proposed miscellaneous service prices in Docket No. 04-0113, please state whether any known significant differences would cause HELCO's incurred costs to provide such service to be materially higher or lower than HECO's incurred costs:

a. HECO's proposed Service Establishment Charge of $20;
b. HECO's proposed Reconnection Charge of $25;
c. HECO's proposed Returned Check (Payment) Charge of $16; and
d. HECO's proposed Field Collection Charge of $20.
e. Provide copies of calculations, reports, analyses, workpapers and other documents relied upon to respond to parts (a) through (d) of this information request.

HELCO Response:

a. HELCO is not aware of whether there are significant differences between HELCO's incurred costs and HECO's incurred costs, nor can HELCO assess whether its costs are materially higher or lower than HECO's incurred costs. As previously indicated in the response to CA-IR-221, parts b and d, HELCO did not complete any work to determine that no changes should be made to any miscellaneous service prices, nor is HELCO aware of any cost differences between HELCO and HECO.

b. See the response to subpart a. above.

c. See the response to subpart a. above.

d. See the response to subpart a. above.

e. Not applicable.

CA-SIR-22

Ref: HELCO Response to CA-IR-29, part c (Residential Customers on Schedule G).

Regarding the reference to, "HELCO's response regarding 'Residential-type Customers on Schedule G' filed with the Commission on August 31, 2001 in Docket No. 99-0207," please provide the following information:

a. A copy of the referenced information; and
b. An update of the current status and estimated numbers of "Residential-type Customers on Schedule G."

HELCO Response:

a. The requested information is voluminous and is available for inspection at HECO's Regulatory Affairs Division office, Suite 1301, Central Pacific Plaza, 220 South King Street, Honolulu, Hawaii. Please contract Dean Matsuura at 543-4622 to make arrangements to inspect the requested information.

b. HELCO's rules and practices discussed in the above-referenced August 31, 2001 response are unchanged and still apply currently. As of October 2006, there are approximately 3,947 "residential-type" customers on Schedule G. This includes approximately 2,353 customers identified in the billing system with Business Structure Code "15T", Residential Temporary Wooden Poles, approximately 1,500 customers with Business Structure Code "17T" – Residential Temporary/Permanent Service, and approximately 94 customers with Business Structure Code "19T" – Residential Temporary Galvanized Pole. The above-referenced August 31, 2001 response identified 1,663 residential-type customers on Schedule G, however, these customers were from Business Structure Code 15T only.

CA-SIR-23

Ref: HELCO Response to CA-IR-469, page 3 (Revised Section 199 Deduction).

a. Interest appears to be allocated based per Note 2 at 71.3% to "generation" using a revenue-based allocation. However, the test year cost of service allocations use relative rate base investment as the basis for allocating interest.
   1. Please explain this difference in methodology;
   2. Describe why revenues are believed to be a rational basis for allocation of interest expense; and
   3. Provide citations to specific Internal Revenue Code or Treasury Regulations that were relied upon for the Company in support of its revenue-based allocation of interest.

b. Provide the derivation of the State and Federal tax depreciation amounts attributed to generation in Note 4, indicating how such amounts can be reconciled to amounts shown at page 11 of the response to CA-IR-447.

HELCO Response:

a.

1. The Company has revised its pro forma calculation of its qualified production activities income (QPAI), which was provided in response to CA-IR-469, page 3, to address the allocation of interest expense to production activities. The Company has revised its interest allocation using the relative rate base investment as the basis for allocating interest to be consistent with the cost of service allocations. Please refer to page 4 of this response.
2. Please refer to a.1. above.
3. Please refer to a.1. above.

b. The state and federal depreciation amounts were based on federal and state tax depreciation schedules generated in August 2006 and were not revised to reflect the change in plant additions as reflected on page 11 of the response to CA-IR-447. CA-IR-469 was submitted prior to the change in the plant additions.

The Company has since revised its plant additions to reflect preliminary December 31, 2006 financials. Accordingly, the federal and state tax depreciation amounts were revised on page 4 to reflect this change.

The 2006 federal and state tax depreciation amounts were calculated by isolating "production assets" in Company's fixed asset system based on its preliminary December 31, 2006 financials. Tax depreciation for federal and state purposes was then calculated.

At year end, the Company evaluated whether it would be required to calculate tax depreciation using the "mid-quarter convention" instead of the "half-year" convention based on HELCO's 2006 fourth quarter additions (2006 preliminary financials). The Company determined that it was required to apply the mid-quarter convention on 2006 vintage assets. Generally, the mid-quarter convention applies to all property placed in service during a tax year (other than nonresidential real property) if more than 40 percent of the aggregate basis of such property is placed in service during the last three months of the tax year (Internal Revenue Code §168(d)(3)). Under this convention, the recovery periods for all property (other than nonresidential real property) placed in service, or disposed of, during any quarter of a tax year begins or ends on the midpoint of that quarter; depreciation begins in the quarter that the asset is placed in service. Previously, the Company forecasted that the half-year convention would apply to its 2006 vintage additions. Under the half-year convention, the recovery period begins or ends on the midpoint of the tax year; one-half of the depreciation for the first year of the recovery period is allowed in the tax year in which the property is first placed in service, regardless of the in service date during the year. Federal and state tax depreciation has been updated for application of the mid-quarter convention.

Hawaii Electric Light Company, Inc.
Revised Pro Forma Calculation of Qualified Production Activity Income (QPAI)
As Adjusted for Interest Expense Allocation and Plant Additions
For Test Year 2006
(in 000s)

	At Proposed Rates HELCO-2101		Allocated To Generation		
Electric Sales Revenue	353,064.5	(C)	160,670.1	(E)	See note (1).
Other Operating Revenue	955.2				
	354,019.7		160,670.1		
Power production expense-Fuel	(78,825.0)		(78,825.0)		
Power production expense-Purchased Power	(117,318.0)	(A)			
Power production expense-Production	(23,040.2)		(23,040.2)		
Transmission expense	(2,401.3)		-		
Distribution expense	(6,598.0)		-		
Customer accounts expense	(3,185.6)		-		
Customer service	(2,251.6)		-		
A & G expense	(12,894.3)		(9,307.5)		HELCO-WP-2001, pg. 46
Total O&M expense	(246,514.0)		(111,172.7)		
Depreciation expense	(29,374.0)		-		
Amort of State ITC	501.0				
Taxes other than income taxes	(32,950.0)		(14,268.0)		CA-SIR-23, page 4.
Income taxes	(13,696.6)		-		
Miscellaneous	(55.8)		(39.8)		Revised; see note (2) below.
Other operating expense	(75,575.4)		(14,307.8)		
Net utility operating income	31,930.3				
Tax Adjustments:					
Interest	(10,438.0)	(3)	(4,913.8)		Revised; see note (6) below.
Estimated Current State ITC on Production Assets			151.6		Revised; see note (5) below.
Estimated State Tax Depreciation on Production Assets			(12,327.0)		See note (4) below.
State Pretax Income			18,100.5		(F)
Less: State Tax Deduction			(1,087.9)		(F) * 6.0150376% state tax rate
State Taxable Income			17,012.6		
Add: Federal State Tax Depreciation Difference			356.0		Revised; see note (4) below.
Estimated taxable income for generation activity for 2006			17,368.6		
Estimated Domestic Production Activities Deduction (3%)			**521**		Revised
Estimated Federal Tax Effect at 35%			**182**		Revised

NOTES:

(1) Calculation of Revenue Attributable to Purchased Power:

Power Production Expense-Purchased Power	117,318.0	(A)
Revenue Tax Gross Up	108.885%	(Franchise Tax 2.5%+PSC Tax 5.885%+PUC Fee .5%)
Purchased Power Revenue Grossed Up	127,741.7	(B)

Electric Sales Revenue Net of Purchased Power Revenues

Electric Sales Revenue	353,064.5	(C)
Less: Electric Sales Revenues Related to Purchased Power	(127,741.7)	(B)
Electric Sales Revenue, Net of Purchased Power Revenue	225,322.8	(D)

Production Sales Net of Purchased Power Revenues

Total Production Sales	288,411.8	HELCO-WP-2001, pg. 6
Less: Production Sales Revenues Related to Purchased Power	(127,741.7)	(B)
Production Sales Revenue, Net of Purchased Power Revenue	160,670.1	(E)

(2) Allocation based on current cost of service workpapers as adjusted for purchased power revenue.

Production Sales / Electric Sales Revenue	160,670.1 / 225,322.8	(E)/(D)
Production Cost of Service Percentage Calculated	71.3066%	

(3) HELCO-WP-1302-WP, p. 2.

(4) 2006 State Tax Depreciation of Production Assets (Revised)	(12,327.0)
2006 Federal Tax Depreciation of Production Assets (Revised)	(11,971.0)
Federal State Tax Depreciation Adjustment	356.0

(5) 2006 Production Tax Additions per State Tax Depreciation Schedule (Revised)	3,791.0
State ITC Rate	4%
Estimated 2006 State ITC	151.6

(6) Rate Base Associated with Production Activities	175,640	HELCO-WP-2001, pg. 52
Total Rate Base	373,100	HELCO-WP-2001, pg. 52
Interest Allocation Based on Rate Base %	47.08%	

Hawaii Electric Light Company, Inc.
Revised Pro Forma Calculation of Qualified Production Activity Income (QPAI)
As Adjusted for Interest Expense Allocation and Plant Additions
For Test Year 2006
(in 000s)

PSC Tax Calculation	At Proposed Rates	References
Electric Sales Revenue	160,670	CA-SIR-23, page 3
PSC Tax Rate	5.885%	HELCO-WP-1301
PSC Taxes	9,455	

PUC Fee Calculation	At Proposed Rates	References
Electric Sales Revenue	160,670	CA-SIR-23, page 3
PUC Fees Rate	0.5%	HELCO-WP-1301
PUC Fees	803	

	At Proposed Rates	References
Electric Sales Revenue	160,670	CA-SIR-23, page 3
Less: Bad Debt Deduction	(302)	Based on total bad debt of 423.7. See CA-SIR-23, p. 3, note (2).
Franchise Royalty Tax Base	160,368	
Franchise Royalty Tax Rate	2.5%	HELCO-WP-1301
Franchise Royalty Taxes	4,009	
Total Taxes Other Than Revenue	14,268	

NOTE> No changes from CA-IR-469, page 4.

CA-SIR-24

Ref: Response to CA-IR-522.

The response to CA-IR-522 explains how the commitment penalty factor is used for Thermal Unit Commitment. The equation Variable O&M ($/MWh) = Variable O&M ($/MWh) + Variable O&M ($/hr) / L (MW) where L = Maximum Load (MW) is on page 2 of the response to CA-IR-522. It appears that the Variable O&M ($/MWh) in the above equation is the same as the Variable O&M ($/MWh) being determined by the equation. Please explain.

HELCO Response:

The "Variable O&M ($/MWh)" on the left side of the equation should have been clarified and labeled as the "Total Variable O&M ($/MWh)", where the "Variable O&M ($/MWh)" on the right side of the equation are the values shown in HELCO-WP-404, page 98. The "Variable O&M ($/hr)" are the values shown in HELCO-WP-404, page 98 and revised in response to CA-IR-448, HELCO T-4, page 5. The two different variable O&M costs shown on CA-IR-448, HELCO T-4, page 5 must be added together to obtain the total variable O&M costs as shown by the equation.

CA-SIR-25

Ref: Response to CA-IR-327.

The response to CA-IR-327 contains a list of thermal maintenance outages. Please provide the dates and lengths of maintenance and overhaul outages for the Panaewa, Ouli, Punaluu, and Kapua diesel generators hat were modeled in the test year.

HELCO Response:

For the test year, the distributed diesel generators did not have any maintenance and overhaul outages included. As shown in HELCO-WP-404, page 94, the diesel generators are not a part of the normalized overhaul schedule. The maintenance outage rates for the Panaewa, Ouli, Punaluu, and Kapua diesel generators equate to less than a day which rounds to zero weeks, as shown in HELCO-WP-404, page 101. As explained in HELCO T-4, page 35, lines 6-12, the AUTOMNT algorithm of the P-MONTH program will round the maintenance outage rate to the nearest week; therefore, for the diesel generators, it is zero.

CA-SIR-26

Ref: HELCO Response to CA-IR-13 (Keahole ST-7).

Please provide the following update information regarding the current status of progress on ST-7:

a. Referring to part (a) of the response to CA-IR-13, HELCO indicated that it expected to commence detailed engineering work in August 2006, with some site construction work beginning in late 2006 to support completion of ST-7 in 2009. What is the present status of Company planning, permitting and construction activities associated with ST-7?

b. Please provide an itemized comparison of the current costs accumulated to date with the July 2006 amounts (i.e., the amounts supplied in response to part (b) of CA-IR-13) by work order/project number.

c. In response to part (c) of CA-IR-13, the Company provided a Site Arrangement Drawing for Keahole, which is difficult to read. Please provide a full size, legible copy of this document.

d. In a format comparable to HELCO-1503, please provide a comparison of the current cost estimate for ST-7 with both the Company's original PUC application estimate and actual expenditures to date.

HELCO Response:

a. Engineering design and support work are underway for ST-7. Currently, procurement activities for equipment have begun. Negotiations for purchase of the Steam Turbine Generator are ongoing and the Request for Proposals for the Heat Recovery Steam Generator was issued for bid on December 29, 2006. On December 19, 2006, construction of the pipe support for fuel piping for a new fuel tank was completed. On December 7, 2006, the Building Permit for the foundation for the new fuel tank was issued. By January 15, 2007, construction of the fuel tank foundation will begin.

b. Current actual ST-7 costs through December 31, 2006 are provided below and in Attachment 1. The requested information is confidential and is being provided pursuant to Protective Order No. 22593, dated June 30, 2006. Actual ST-7 costs through December 31,

2006, the estimated forecasted remaining costs and the current total estimated costs are confidential until the information is publicly disclosed in HECO's Form 10-K financial statements or when the Consumer Advocate includes such information in its testimony in this proceeding, which is scheduled for February 21, 2007.

Description	**Project Number**	**Actual Cost Thru July 28, 2006**	**Actual Cost Thru Dec 31, 2006**
Reclassification and rezoning of Keahole station	H0000655	$1,956,171	[redacted]
ST-7 Outside Plant Design Engineering	H0001383	$18,913	[redacted]
ST-7 Outside Air Permitting	H0001383	$13,423	[redacted]
ST-7 HECO Services (Engineering, Legal, Environmental)	H0001383	$59,930	[redacted]
ST-7 Preliminary Engineering	H0001383	$50,843	[redacted]
HELCO Labor, Overhead & Expenses	H0001383		[redacted]
Construction	H0001383		[redacted]
AFUDC	H0001383		[redacted]

c. The file "CA-IR-13c page 5 (dwg89321-10).pdf" provided to the CA on August 17, 2006 as part of the response to CA-IR-13 is scalable and can be used to print a larger copy. For convenience one full size copy is being provided as Attachment 2 with this CA-SIR response.

d. [redacted]

[redacted]

Confidential Information Deleted
Pursuant to Protective Order No. 22593

[redacted]

The requested information is confidential and will
Be provided pursuant to Protective Order No. 22593.

This page is intentionally left blank.

hyp89321.dgn

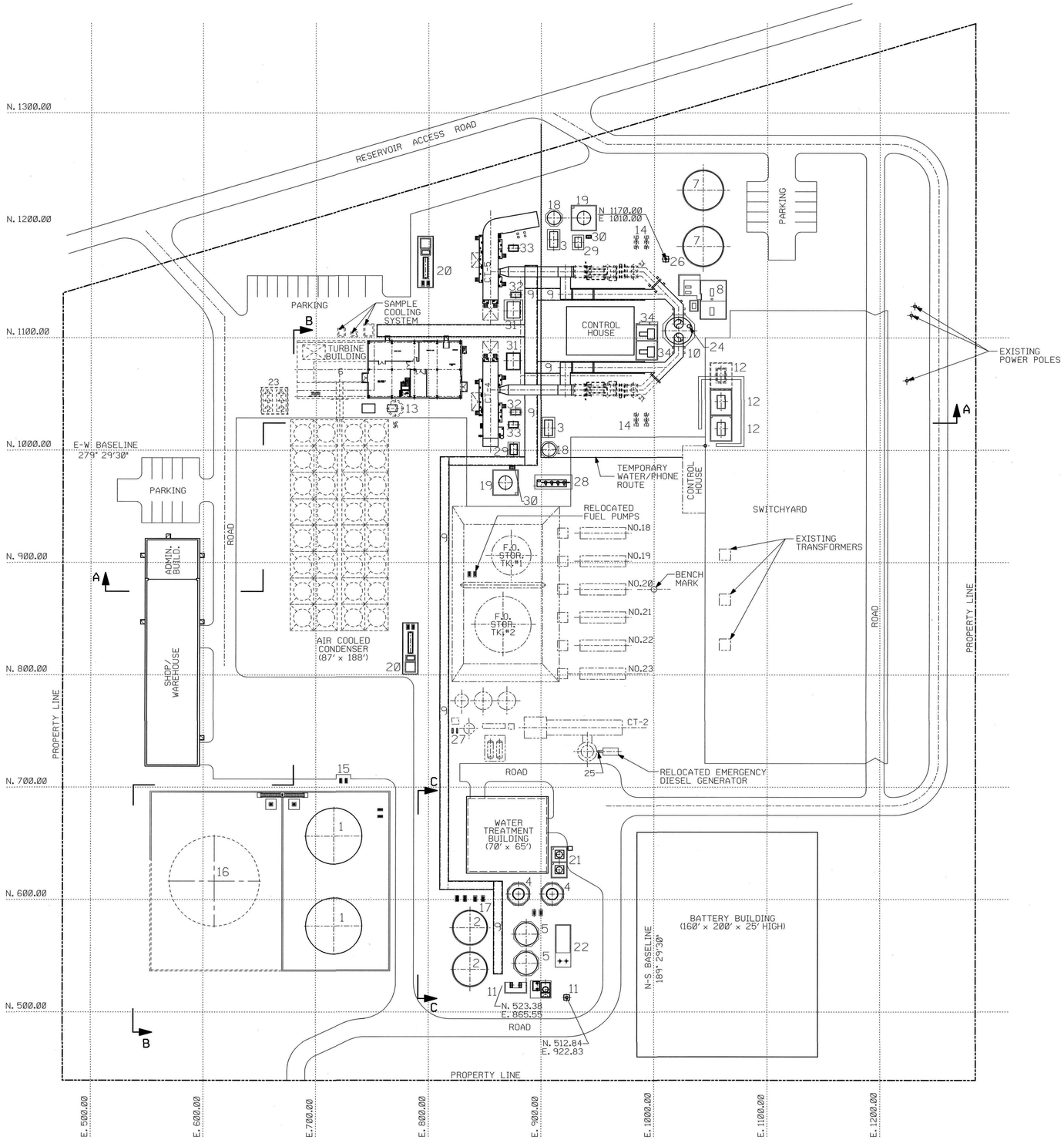

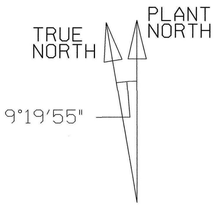

MARK NO.	DESCRIPTION	
1	FUEL OIL STORAGE TANK (50' DIA. x 42'H.)	
2	DEMINERALIZED WATER STORAGE TANK (30'DIA. x 24' H.)	
3	WATER INJECTION PUMPS FOR COMBUSTION TURBINE	
4	NEUTRALIZATION TANK (10' DIA. x 18' H.) WITH CONTAINMENT WALL	
5	WASTE WATER TANK (20' DIA. x 24' H.)	
6	STEAM TURBINE	(FUTURE)
7	FIRE / SERVICE WATER TANK (35' DIA. x 30' H.)	
8	FIRE PUMP HOUSE (45' x 20' x 19' HIGH)	
9	PIPE RACK	
10	DUAL FLUE STACK (104' H.)	
11	INJECTION WELL	
12	MAIN TRANSFORMERS	(ONE FUTURE)
13	CONDENSATE STORAGE TANK (12' DIA. x 16' H.)	(FUTURE)
14	HRSG FEED PUMPS	(FUTURE)
15	FUEL OIL UNLOADING FACILITIES	
16	FUEL OIL STORAGE TANK (80'DIA.x 42'H.)	(FUTURE)
17	DEMINERALIZED WATER TRANSFER PUMPS	
18	DEMINERALIZED WATER DAY TANK (12'DIA.x16'H.)	
19	FUEL OIL DAY TANK (12'DIA.x16'H.)	
20	OIL / WATER SEPARATOR	
21	SULFURIC ACID & CAUSTIC SODA STORAGE	
22	SOLID SETTLING BASIN	
23	TURBINE LUBE OIL RADIATOR	(FUTURE)
24	12" DIESEL FIRE PUMP EXHAUST FLUE (104' HIGH)	
25	10" BLACK START DIESEL EXHAUST FLUE (74'-2")	
26	BRACKISH WATER WELL PUMP	
27	CT-2 NEUTRALIZED WATER PUMPS	
28	FUEL OIL CENTRIFUGAL SEPARATOR	
29	DUPLEX FUEL PUMP SKID	
30	LIQUID FUEL PRE-FILTER	
31	OIL COOLERS	
32	TURBINE WASH SKID	
33	HYDRAULIC START SKID	
34	AUXILIARY TRANSFORMERS	

NOTES:

1. SCALE : 1" = 40'-0"
2. PLANT GRID SYSTEM BASED ON EAST WEST BASELINE 279°29'30" BEING EQUAL TO N 1000.00 AND NORTH SOUTH BASELINE 189°29'30" BEING EQUAL TO E 1000.00.
3. MITIGATION MEASURES WILL BE DETERMINED THROUGH THE AIR QUALITY PERMITTING PROCESS AS ADMINISTERED BY THE STATE DEPT. OF HEALTH AND MAY INCLUDE MODIFICATIONS TO THE EMISSION CONTROL TECHNOLOGY REQUIREMENTS (e.g., SELECTIVE CATALYTIC REDUCTION, ETC.) AND SPECIFICATION OF FUEL PROPERTIES (e.g., NAPHTHA, LOW SULFUR DIESEL, ETC.).

0 40 80
SCALE: 1"=40'-0"

SCANNED
MAY 20 2004

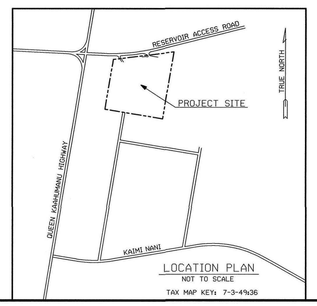

LOCATION PLAN
NOT TO SCALE
TAX MAP KEY: 7-3-49:36

NO.	DATE	REVISIONS	BY	CHK'D	APP'D
10	5/19/04	REVISED PE STAMP	RLB		
9	3/17/04	REVISED FOR CONSTRUCTION			
8	9/16/02	ADDED MARK NUMBERS 27 THRU 34, RELOCATED EQUIPMENT	RSM		
7	2/13/98	CHANGED NORTHERN TRANSFORMER TO FUTURE	LED	LVM	LVM
6	1/23/98	GENERAL REVISIONS AS NOTED	LED	WEB	LVM
5	5/6/96	ADDED NOTE 3	LED	LED	RCC
4	8/4/94	GENERAL REVISIONS AS NOTED	WWC	LED	RCC
3	3/25/93	REVISED SWITCHYARD & SUPPLY WELL LOCATION	WGK	LVM	RCC
2	12/8/92	REVISED FOR PERMITTING	LED	LVM	RCC
1	11/18/92	FOR PERMITTING PURPOSES	LED	LVM	RCC
0	10/15/92	FOR CLIENT COMMENT	LED	LVM	RCC

Shaw

STONE & WEBSTER, INC.
DENVER, CO.
JOB ORDER NUMBER 02535

SITE ARRANGEMENT
KEAHOLE POWER PLANT
UNITS CT-4 , CT-5 & ST-7

HAWAII ELECTRIC LIGHT CO., INC.
HILO, HAWAII

DESIGNED LED | DRAWN WGK | DATE: 10/30/92 | SCALE: 1"=40'-0"
CHECKED | ELECT | MECH | STRUCT
APPROVAL

ENGINEERING DEPARTMENT
HAWAIIAN ELECTRIC CO., INC.
HONOLULU, HAWAII

DRAWING NUMBER 89321 | REV. 10
SHEET NO.1 OF 1

PETER J. SMITH
LICENSED PROFESSIONAL ENGINEER
No. 5959-S
HAWAII, U.S.A.

CONSTRUCTION OF THIS PROJECT WILL BE UNDER MY OBSERVATION
SIGNATURE 4/30/06 EXPIRATION DATE OF LICENSE

PETER J. SMITH
LICENSED PROFESSIONAL ENGINEER
No. 5959-S
HAWAII, U.S.A.

THIS WORK WAS PREPARED BY ME OR UNDER MY SUPERVISION
SIGNATURE 4/30/06 EXPIRATION DATE OF LICENSE

CA-SIR-27

Ref: T-4, page 19, lines 14-25, T-4, page 20, lines 1-16, HELCO-402 and response to CA-IR-33.

Please provide actual fuel prices for industrial fuel oil and diesel fuel by month since June 1, 2006.

HELCO Response:

The information requested is confidential and will be provided pursuant to Protective Order No. 22593, dated June 30, 2006. The actual fuel prices for June, July, and August of 2006 were provided in response to CA-IR-33, pages 47-56. The actual fuel prices for September to December 2006 are on confidential pages 2-13.

Confidential Information Deleted
Pursuant to Protective Order No. 22593

This page intentionally left blank.

CA-SIR-28

Ref: T-4, pages 44-45.

HELCO T-4, page 44, line 25 through page 45, line 2, Hill 5 and Shipman are discussed as having a start-up cost associated with them.

a. Please explain if start-up costs for HELCO-owned units other than Hill 5 and Shipman are included in the dispatch model or otherwise included in fuel costs.

b. If so, please provide all related documentation and calculations used to derive their start-up costs.

HELCO Response:

a. Start-up fuel requirements for Puna CT3, Keahole CT4, and Keahole CT5 are included in the model as shown in HELCO-WP-404, page 23. The start-up fuel for Puna CT3, Keahole CT4, and Keahole CT5 is the same diesel fuel that is used to operate the unit, and is included in the fuel consumption used to calculate the fuel expense shown in HELCO-WP-404, page 4.

b. The start-up fuel requirement for Puna CT3, Keahole CT4, and Keahole CT5 is based on an average amount from tests recorded for all of the units. The start-up fuel required for each start-up is not automatically recorded for these units. Data from one start-up of each unit was recorded and averaged as follows:

Puna CT3	38.5 gallons
Keahole CT4	29.6 gallons
Keahole CT5	30.5 gallons
Average	= 32.9 gallons
	= 32.9 gallons / (42 gallons/barrel) x 5.86 MBTU/barrel
	= 4.59 MBTU

As indicated in response to subpart a. above, the 4.59 MBTU start-up fuel requirement is shown in HELCO-WP-404, page 23. The P-MONTH production simulation model will take into account the start-up fuel requirement for these units in the total fuel consumption. The start-up costs for these units are included as part of the total fuel expense shown in HELCO-WP-404, page 4, as indicated in response to subpart a. above.

CA-SIR-29

Ref: HELCO-WP-404, page 100.

HELCO-WP-404, page 100 contains historical forced outage rates and test year forced outage rates for HEP and PGV. This workpaper references a spreadsheet titled PGV EFOR 98 Feb1606.xls. Please provide and explain the spreadsheet PGV EFOR 98 Feb1606.xls including any calculations and equations used.

HELCO Response:

The "PGV EFOR 98-Feb1606.xls" file calculates the equivalent forced outrage rate (EFOR) for PGV based on actual hourly output recorded by the HELCO scada system. PGV's EFOR is calculated by the following equation:

PGV EFOR = EUDH / [FOH + SH]

where,

EUDH = Equivalent unplanned derated hours, including forced outage hours

FOH = Forced outage hours = (PH – SH – OH)

where,

PH = Period hours

SH = Service hours

OH = Overhaul hours

The EUDH is derived by calculating the number of hours when PGV is not producing the contracted output of 30 MW during the on-peak period and 22 MW during the off-peak period. Please refer to the attached electronic file "PGV EFOR 98-Feb1606.xls" for the calculations.

CA-SIR-30

Ref: HELCO-WP-404, page 97 and Response to CA-IR-452, page 36.

HELCO-WP-404, page 97 lists heat rate constants and minimum and maximum output values. CA-IR-452, page 36 describes the minimum load capability for HEP.

a. For HEP with 1 CT operating in simple cycle mode, HELCO WP-404, page 97 lists the minimum as 6 MW. For the same operating mode, CA-IR-452, page 36 lists the minimum as 5 MW. Please identify which minimum is correct.

b. For HEP with 2 CTs operating in combined cycle mode, HELCO-WP-404, page 97 lists the minimum as 12 MW. For the same operating mode, CA-IR-452, page 36 lists the minimum as 16 MW. Please identify which minimum is correct.

HELCO Response:

a. The minimum rating of HEP with 1 CT operating in simple cycle mode is 5 MW. This revision was identified in HELCO's response to CA-IR-448, HELCO T-4, subpart b.2. and shown in CA-IR-448, HELCO T-4, page 4.

b. The minimum rating of HEP with 2 CTs operating in combined cycle mode is 16 MW. This was inadvertently not identified in HELCO's response to CA-IR-448, HELCO T-4, subpart b.2. but is shown correctly at 16 MW in CA-IR-448, HELCO T-4, page 4.

CA-SIR-31

Ref: HELCO-WP-405, page 1, HELCO-WP-404, page 8.

HELCO-WP-405, page 1, Reference for Line 1 states, "test year based on output from production simulation, HELCO-WP-408, page 8."

a. Please explain how the propane start-up costs for Shipman were derived. Please include all supporting calculations and equations used.

b. Please provide an electronic copy of HELCO-WP-404, page 8 that includes calculations and equations.

HELCO Response:

a. The propane start-up fuel requirements for Shipman were based on tests conducted to determine the amount of propane fuel required for cold and warm starts. The tests resulted in propane start-up fuel requirements as follows:

Cold start	436.5 therms = 43.65 MBTU
Warm start	238 therms = 23.8 MBTU

The start-up fuel requirements for Shipman cold starts are shown on HELCO-WP-404, page 23. The start-up fuel requirements for Shipman warm starts are shown in the 75th column of data in the electronic file "hty06r23.ucs" provided in HELCO response to CA-IR-34. As indicated in HELCO T-4, page 19, line 5, the propane fuel cost is $1/therm, or $10/MBTU. The propane fuel cost is shown in HELCO-WP-404, page 21 as 1000 cents/MBTU. The production simulation model calculates the start-up fuel requirement and fuel costs for the test year based on the abovementioned input data. The calculated propane fuel cost for Shipman is shown on HELCO-WP-404, page 8 under the Fuel Type Summary for "PropaneS" in millions of dollars (M$) as 0.2289 or $228,900 as shown in HELCO-WP-405, page 1, Line 1.

b. HELCO-WP-404, page 8 is part of an output report from the P-MONTH production simulation model. The electronic file is a text file that does not contain any equations or calculations. Please refer to the attached electronic file "hty06r23.yr".

CA-SIR-32

Ref: T-5, page 89, lines 19–21.

HELCO T-5, page 89, lines 19–21 states that PGV's fuel index is based on the February 2006 average price as reported by Platts Los Angeles LS Diesel Pricing Report from December 21, 2005 to January 20, 2006.

a. Please provide Platts Los Angeles LS Diesel Pricing Report since December 21, 2005.

b. Please provide the calculations used to determine PGV's fuel index for every month since January 2006.

HELCO Response:

a. Refer to CA-SIR-32, Attachment 1. Attachment 1 contains confidential fuel pricing information and is being provided to the Commission, and the Consumer Advocate pursuant to Protective Order No. 22593, issued June 30, 2006.

b. PGV fuel index is calculated using the average monthly fuel price divided by base ($0.5444/gallon). The monthly calculation since January 2006 is shown on CA-SIR-32, Attachment 2.

Confidential Information Deleted
Pursuant to Protective Order No. 22593.

This page intentionally left blank.

HAWAII ELECTRIC LIGHT COMPANY, INC.
PGV FUEL INDEX

	PNW (Current)	PNW (Base)		Fuel Index
Jan 2006	1.6917	0.5444	=	3.10746
Feb 2006	1.8163	0.5444	=	3.33633
Mar 2006	1.8748	0.5444	=	3.44379
Apr 2006	1.9516	0.5444	=	3.58486
May 2006	2.1298	0.5444	=	3.91220
Jun 2006	2.3779	0.5444	=	4.36793
Jul 2006	2.3012	0.5444	=	4.22704
Aug 2006	2.2024	0.5444	=	4.04555
Sep 2006	2.2592	0.5444	=	4.14989
Oct 2006	2.1194	0.5444	=	3.89309
Nov 2006	1.7799	0.5444	=	3.26947
Dec 2006	1.8373	0.5444	=	3.37491
Jan 2007	2.0196	0.5444	=	3.70977

Fuel Index = PNW(Current) / PNW(Base)

CA-SIR-33

Ref: HELCO T-6 Response to CA-IR-447 (T&D Transformer Mounting Plates).

The HELCO T-6 response to CA-IR-447 proposes, in part, to increase T&D expense by $62,065 for additional costs associated with a program to replace transformer mounting plates implemented in mid-2006. Page 10 of the referenced response provides a breakdown of the additional expense between labor and nonlabor. Please provide the following:

a. Is the work on replacing the mounting plates for a particular transformer scheduled to coincide with other work on that transformer or is the replacement work scheduled irrespective of any other planned or needed work? Please explain.

b. Referring to page 10, please provide additional workpaper support for the $32,013 of nonlabor expense, including quantities and cost of materials used.

c. Page 10 of the referenced response also sets forth $30,052 of labor expense. The labor cost is based on 768 labor hours (4 hrs * 8 man crew * 24 banks) and a standard labor rate of $34.829. Please provide the following:

   1. Did the Company actually replace the mounting plates for 24 transformer banks in 2006? Please explain.

   2. Does the Company expect to commit 768 labor hours per year to replacing the mounting plates during the period 2007-2011? Please explain.

   3. Did the Company actually hire additional employees to perform the mounting plate replacement work? Please explain.

HELCO Response:

a. Other work on transformers was performed, at the same time as replacement of transformer mounting plates, when practicable. HELCO did not experience an appreciable change in costs for doing other transformer work on a coincident basis with transformer mounting plate replacements.

b. The direct material cost estimate of $3,600 is shown under expense element 201 and the associated material overhead cost estimate is $427. The direct material cost estimate of $3,600 is for 24 banks at an estimated $150 of mounting plate cost per transformer bank. The estimate for material overhead of $427 was calculated by multiplying the material

overhead rate of 11.86% by the direct material estimate of $3,600. The estimate for other nonlabor cost associated with the transformer mounting plate replacements is $27,986 for Energy Delivery Overhead loading that computes on direct labor hours.

c.

1. No, the Company replaced mounting plates for 18 transformer banks in 2006. As stated in HELCO T-6 response to CA-IR-447, the adjustment of $62,064 was based on an estimate of mounting plate replacements for 24 transformer banks. The actual cost to locate and replace the mounting plates for 18 banks in 2006 was $60,358, with $31,953 of the cost for the replacements and $28,405 of the cost for inspections to locate the mounting plates requiring replacement.

   There are mounting plates on approximately 367 transformer banks on the HELCO system that needed to be inspected to determine if the plates required replacement. In 2006 approximately 256 transformer banks were inspected and of those 256 transformer banks, the plates on approximately 160 transformer banks require replacement. In HELCO T-6 response to CA-IR-447, the Company provided the estimated total number of banks requiring plate replacement to be 160. However, this amount was supplied in error and the correct estimate supplied should have been 240. There still remain approximately 110 transformer banks that need to be inspected to determine if the mounting plates need to be replaced. If the same proportion of banks inspected to banks that require plate replacements continue, then another approximate 70 banks will require their plates to be replaced. This would bring the total amount of banks requiring plate replacements to approximately 230. To develop the estimate the Company rounded the estimated total amount of banks requiring replacement to 240,

then estimated approximately 48 banks per year for 5 years to complete the program. The adjustment included in the HELCO T-6 response to CA-IR-447 was for 24 plate replacements which is half of the updated estimate of the number of replacements required per year. The adjustment did not include any additional costs for inspections to locate the mounting plates that need replacement.

2. Yes, the Company intends to commit at least 768 labor hours per year to this effort for years 2007 to 2011. The Company intends to continue the program until all of the mounting plates that require replacement are replaced. The adjustment to the test year estimate of $62,064 is based on 24 banks and 768 HELCO labor hours in 2006, though more banks need to be replaced annually in order to complete the necessary replacements within 5 years.

3. In 2006 the Company utilized the existing employees on straight time and overtime and contractors to complete the 18 transformer mounting plate replacements. The plans and estimates for years 2007 – 2011 are to use Company employees to perform the work though contractors will be used if necessary. The Company continues to recruit qualified linemen and hire and train unqualified personnel to become qualified linemen in order to have resources to perform line work.

CA-SIR-34

Ref: HELCO T-6 Response to CA-IR-447 (T&D Transformer Mounting Plates).

Page 10 of the HELCO T-6 response to CA-IR-447 provides a breakdown of the additional expense for the transformer mounting plate replacement program between labor and nonlabor. It is unclear why the mounting plate replacement work requires HELCO to incur additional or incremental labor expense. Please provide the following:

a. Referring to the HELCO T-6 response to CA-IR-1, pages 55, 71 and 94 of part b shows the Company's 2006 labor hour forecast for DH-Crew, DK-Crew and DW-Crew, respectively. Please confirm that these labor classes represent the 8 DCREW workers assigned to replace the mounting plates. If this cannot be confirmed, please explain.

b. According to the references pages of the response to CA-IR-1, the distribution of productive labor hours between O&M and capital work is 34%/66% (DH-Crew), 30%/70% (DK-Crew) and 36%/64% (DW-Crew).

   1. Is the mounting plate replacement work expected to displace DCREW work on capital projects, as included in the Company's original filing? Please explain and identify the capital projects that will be reduced or terminated.

   2. Is the mounting plate replacement work expected to displace DCREW work on other O&M related work, as included in the Company's original filing? Please explain and identify the O&M related projects that will be reduced or terminated.

   3. Please provide copies of any documentation supporting the response to parts (b)(1) and (b)(2) above.

HELCO Response:

a. Yes, the estimate and plan were to have workers in Labor classes HDH-crew, HDK-crew, and HDW-crew perform the work.

b.

   1. No. Capital projects were not reduced or displaced in order to complete the transformer mounting plate replacements. The transformer plate replacements were treated as work in addition to the original test year estimate since HELCO intended to complete all of the plate replacements and not reduce the amount of work originally forecasted in the test year. In 2006 the Hilo District C&M employees worked straight time and overtime

to perform transformer mounting plate replacements and in the Kona and Waimea Districts contractors were used to perform the replacement work. As of October 2006, the Hilo District C&M overtime was at 19,010 hours which was well above the 14,796 hours forecasted for the entire year (the 2006 forecast and as of June 2006 overtime hours were provided in response to CA-IR-86). The transformer bank plate replacements contributed to the higher than forecasted overtime hours in the Hilo District. In the Kona and Waimea districts the HELCO work force was performing work on other planned capital and O&M work so contractors were used to complete the transformer bank plate replacements. This contract work was in addition to the other capital and O&M work already being performed by contractors. Delaying the transformer mounting plate replacements could lead to catastrophic failure of mounting plates that could cause transformers to fall to the ground, resulting in power interruptions, oil spills and possible injury to the public. Therefore, the Company performed transformer mounting plate replacements and did not reduce other work.

2. No, as explained in part 1, the transformer plate replacements are additional work and an adjustment to increase the rate case estimate was made accordingly. As described in part 1, delaying the transformer mounting plate replacements would not be in the best interest of the public.

3. Information supporting the transformer mounting plate replacements was provided in HELCO T-6 response to CA-IR-447.

CA-SIR-35

Ref: HELCO T-6 Response to CA-IR-447 (T&D Safety Improvement Program).

The HELCO T-6 response to CA-IR-447 proposes, in part, to increase T&D employee training expense by $404,798, which would be charged to Accounts 925 and 926. This response also indicates that the Company's original filing included $558,829 of T&D training charged to these same accounts. Please provide the following:

a. Please explain why employee non-safety training expense is charged to Account 926, other employee benefits.

b. Please provide a breakdown of the $558,829 of T&D training included in the Company's original filing between these two accounts.

c. Please provide a breakdown of the T&D training labor hours and dollars by labor class, comprising the $558,829 included in the Company's original filing, in a format comparable to page 11 of the HELCO T-6 response to CA-IR-447.

HELCO Response:

a. The Distribution Department non-safety training costs have historically been charged to Account 926. Non-safety training includes both technical and non-technical skills development and is a benefit to the employee as it enhances employee knowledge, skill, and ability, as well as develops the employee for future career opportunity within the Company. The charging of this cost to Account 926 is consistent with NARUC Uniform System of Accounts (1976 version) which states for Account 926, item number 7 on page 163, "Expense in connection with education and recreational activities for the benefit of employees." The Company has continued to charge this cost to Account 926 in order to remain consistent with historical data.

b. The amount of $558,829 presented on page 4 of the response to CA-IR-447, T-6, which includes $289,512 to Account 925 and $269,317 to Account 926, inadvertently includes certain on-costs (i.e. corporate administrative, employee benefits and payroll taxes) that

should have been reversed out of or excluded from the Distribution Department training expense presented in the original HELCO T-6 filing. The reason for reversing out these on-costs was described in HELCO T-9, page 19, line 20 through page 22, line 24.

It was also discovered that adjustments of ($7,859) to Account 925 and ($3,627) to Account 926, which were detailed in HELCO-WP-601, were inadvertently not incorporated into the test year estimates of HELCO T-9 and HELCO T-10.

The test year estimates in the original filing for Distribution Department training expense should have been $226,000 in Account 925 and $224,100 in Account 926, for a total of $450,100 for Distribution Department training expense.

The table below reconciles the error and omission to derive the corrected original test year estimate for Distribution Department training expense.

	Account 925	Account 926	Total Distribution Dept Training Expense	Reference
Gross 2006 Operating Budget for Distribution Dept Expense (HDO)	$289,512	$269,317	$558,829	HELCO-WP-101(C), page 59.
Reallocation of G/L Code Adjustments to HDO	($55,600)	($41,600)	($97,200)	Reverse: EE 406(Corp Adm), 422 (Emp Benefits) 423 (Payroll taxes).
2006 Operating Budget for Distribution Dept Expense Net of G/L Code Adjustments	$233,912	$227,717	$461,629	
Adjustment No. 2: 4 Trouble Inspectors	($5,138)	($2,418)	($7,556)	HELCO-WP-601, Page 3.
Adjustment No. 3 : Change in New Hire Position in Kona	($2,721)	($1,209)	($3,930)	HELCO-WP-601, Page 3.
Subtotal Adjustments	($7,859)	($3,627)	($11,486)	
Corrected Distribution Dept training expense @ Direct	$226,053	$224,090	$450,143	

Please see page 3 for the reconciliation for Accounts 925 and 926 for the adjustments to the operating forecast and the adjustments made in HELCO T-6 response to CA-IR-447.

c. A breakdown of the $450,100 original test year estimate (corrected) for Distribution Department training expense is provided on page 4 of this response.

HAWAII ELECTRIC LIGHT CO., INC.
ADMIN & GENL O&M EXPENSE
TEST YEAR 2006 ($1000's)

	(Per HELCO-WP-101(C) Page 59) 2006 OPERATING BUDGET	Reallocation of GL codes	Allocation of G/L codes excluding 406,422,423	(Per HELCO-WP-901) BUDGET ADJTS	(See Note 1) (Per HELCO-WP-601, pg 3 of 5 BUDGET ADJTS	RATE CASE ADJTS/ NORMALIZ-ATIONS	2006 DIRECT TEST YEAR ESTIMATE	REVISIONS, UPDATES & MODS 11/06	2006 REVISED TEST YEAR ESTIMATE
925 INJURIES & DAMAGES									
(G/L codes)	(272.0)	272.0	-	0.0	0.0	0.0	0.0	0.0	0.0
H9PD President	505.0	0.0	505.0	(296.5)	0.0	0.0	208.5	0.0	208.5
HAO Accounting	495.6	0.0	495.6	(12.7)	0.0	0.0	482.9	0.0	482.9
HCO Customer Service	-	0.0	-	0.0	0.0	0.0	0.0	0.0	0.0
HDO Distribution	289.5	(55.6)	233.9	0.0	(7.9)	0.0	226.0	160.4	386.4
HEO Energy Services	-	0.0	-	0.0	0.0	0.0	0.0	0.0	0.0
HGO Generation	163.0	(37.3)	125.7	0.0	0.0	0.0	125.7	(73.0)	52.7
HNO Administrative	1,130.3	(179.1)	951.2	(69.0)	0.0	0.0	882.2	0.0	882.2
HWO Accounting	-	0.0	-	0.0	0.0	0.0	0.0	0.0	0.0
TOTAL 925	2,311.4	-	2,311.4	(378.2)	(7.9)	0.0	1,925.3	87.4	2,012.7
926 EMPLOYEE BENEFITS									
(G/L codes)	(2,216.4)	2,216.4	0.0	0.0	0.0	0.0	0.0	0.0	0.0
HAO Accounting	-	0.0	0.0	0.0	0.0	0.0	0.0	0.0	0.0
HCO Customer Service	12.1	0.0	12.1	0.0	0.0	0.0	12.1	0.0	12.1
HDO Distribution	269.3	(41.6)	227.7	0.0	(3.6)	0.0	224.1	235.8	459.9
HEO Energy Services	-	0.0	0.0	0.0	0.0	0.0	0.0	0.0	0.0
HGO Generation	-	0.0	0.0	0.0	0.0	0.0	0.0	0.0	0.0
HNO Administrative	7,029.1	(2,174.8)	4,854.3	(28.6)	0.0	(156.4)	4,669.3	(3.9)	4,665.4
HWO Accounting	-	0.0	0.0	0.0	0.0	0.0	0.0	0.0	0.0
								0.0	0.0
TOTAL 926	5,094.1	0.0	5,094.1	(28.6)	(3.6)	(156.4)	4,905.5	231.9	5,137.4

Note(1):
Adjustment of (7.9) to Account 925 was erroneously excluded in CA-IR-447, HELCO T-9, page 3 of 14.
The itemized detail is shown on HELCO-WP-601, page 3 of 5 . See adjustments 2 and 3 to Account 925.
Also, Adjustment of (3.6) to Account 926 was erroneously excluded in CA-IR-447, HELCO T-9, page 4-5 of 14.
The itemized detail is shown on HELCO-WP-601, page 3 of 5. See adjustments 2 and 3 to Account 926.

Hawaii Electric Light Company Inc.
Transmission and Distribution

Account Impacted	Labor Class	Activity	Labor: Hours	Labor: Direct Labor $ EE150	Labor: NPW Rate EE421	Labor: NPW $	Labor: Subtotal	NOTES	Non-Labor: Energy Delivery EE404	Non-Labor: Energy Delivery $ EE404	EE205	Contract Services EE501	Outside Svcs EE505	Company Memberships EE515	Mainland Travel EE520	Meals & Entertainmen EE521	Interisland Travel EE522	Interco Charges EE550	Rounding	Subtotal	Total $	RA
925	DTECHCREW	797	791	23,176	4.30	3,401	26,578	A&G Oper	36.44	28,824	16	200				162				29,202	55,780	HDC
925	DCREW	797	998	34,760	4.30	4,291	39,052	A&G Oper	36.44	36,367									464	36,831	75,883	HDH
925	DCREW	795	12	418	4.30	52	470	A&G Oper	36.44	437				110						547	1,017	HDK
925	DCREW	797	638	22,222	4.30	2,743	24,965	A&G Oper	36.44	23,249										23,249	48,214	HDK
925	DINSPE	797	36	1,243	4.30	155	1,398	A&G Oper	36.44	1,312										1,312	2,710	HDK
925	DINSPE	797	53	1,830	4.30	228	2,058	A&G Oper	36.44	1,931										1,931	3,989	HDR
925	DCREW	797	462	16,091	4.30	1,987	18,078	A&G Oper	36.44	16,835										16,835	34,913	HDW
925	DINSPE	797	36	1,243	4.30	155	1,398	A&G Oper	36.44	1,312									1	1,313	2,711	HDW
			3,026	100,984		13,012	113,996			110,267	16	200		110		162			465	111,220	225,216	
926	DTECHCREW	789	619	18,137	4.30	2,662	20,798	A&G Oper	36.44	22,556	67	10,575				216	1,585			34,999	55,798	HDC
926		788	-	-	4.30	-	-	A&G Oper	36.44	-		14,950			3,152			609		18,711	18,711	HDC
926		786	-	-	4.30	-	-	A&G Oper	36.44	-	24									24	24	HDC
926		807	-	-	4.30	-	-	A&G Oper	36.44	-		2,000								2,000	2,000	HDC
926	DCREW	753	24	836	4.30	103	939	A&G Oper	36.44	875										875	1,814	HDH
926	DCREW	786	60	2,090	4.30	258	2,348	A&G Oper	36.44	2,186										2,186	4,534	HDH
926	DCREW	787	12	418	4.30	52	470	A&G Oper	36.44	437										437	907	HDH
926	DCREW	788	60	2,090	4.30	258	2,348	A&G Oper	36.44	2,186			450							2,636	4,984	HDH
926	DCREW	789	649	22,605	4.30	2,791	25,395	A&G Oper	36.44	23,650										23,650	49,045	HDH
926	DCREW	753	12	418	4.30	52	470	A&G Oper	36.44	437										437	907	HDK
926	DCREW	786	36	1,254	4.30	155	1,409	A&G Oper	36.44	1,312										1,312	2,721	HDK
926	DCREW	788	48	1,672	4.30	206	1,878	A&G Oper	36.44	1,749										1,749	3,627	HDK
926	DCREW	789	425	14,803	4.30	1,828	16,630	A&G Oper	36.44	15,487										15,487	32,117	HDK
926	DINSPE	789	20	691	4.30	86	777	A&G Oper	36.44	729										729	1,505	HDK
926	DCREW	807	48	1,672	4.30	206	1,878	A&G Oper	36.44	1,749										1,749	3,627	HDK
926	DINSPE	789	61	2,106	4.30	262	2,369	A&G Oper	36.44	2,223		600								2,823	5,191	HDR
926	DCREW	789	446	15,534	4.30	1,918	17,452	A&G Oper	36.44	16,252		200								16,452	33,904	HDW
926	DINSPE	789	34	1,174	4.30	146	1,320	A&G Oper	36.44	1,239										1,239	2,559	HDW
926	DCREW	807	12	418	4.30	52	470	A&G Oper	36.44	437										437	907	HDW
			2,566	85,916	4.30	11,034	96,950	A&G Oper		93,505	91	28,325	450	-	3,152	216	1,585	609	-	127,933	224,883	
			5,592	186,900		24,046	210,946			203,772	107	28,525	450	110	3,152	378	1,585	609	465	239,153	450,100	

CA-SIR-36

Ref: HELCO T-6 Response to CA-IR-447 (T&D Safety Improvement Program).

The HELCO T-6 response to CA-IR-447 proposes, in part, to increase T&D employee training expense by $404,798. According to page 11 of the HELCO T-6 response to CA-IR-447, the additional training expense largely associated with employee labor (i.e., 4,967 hours) to prepare and attend the various safety programs, plus nonproductive and oncost loadings. Please provide the following:

a. When did the Company first become aware of the need to recognize an additional $404,798 adjustment for T&D employee training costs? Please explain.

b. Are the additional hours committed to preparing and attending the new safety programs expected to displace capital project work, as included in the Company's original filing? Please explain and identify the capital projects that will be reduced or terminated.

c. Are the additional hours committed to preparing and attending the new safety programs expected to displace O&M related work, as included in the Company's original filing? Please explain and identify the O&M related projects that will be reduced or terminated.

d. Please provide copies of any documentation supporting the response to parts (b) and (c) above.

HELCO Response:

a. The Company first began to re-evaluate the safety training approach in late 2005 after the 2005 accident and incident records were reviewed. The change in the training approach began in March of 2006, after the Safety Improvement plan (copy was supplied with HELCO T-6 response to CA-IR-447) was developed. The estimates for the new training costs were made when the 2007-2008 O&M forecasts were developed in August of 2006. The adjustment was supplied in HELCO T-6 response to CA-IR-447.

b. No. In 2006 the Company did not reduce or terminate capital projects because of the new safety programs.

c. No. In 2006 the Company did not reduce or terminate O&M related projects due to the implementation of the new safety program.

d. Information supporting the adjustment for the new safety program was provided in the HELCO T-6 response to CA-IR-447.

CA-SIR-37

Ref: HELCO T-6 Response to CA-IR-447 (T&D Safety Improvement Program).

The HELCO T-6 response to CA-IR-447 proposes, in part, to increase T&D employee training expense by $404,798. This response also indicates that the Company's original filing included $558,829 of T&D training. Please provide the following:

a. According to the above information, the Company is now proposing to include, in the test year forecast, $963,627 for T&D training.

   1. Please confirm that this summation accurately represents HELCO's recommendation.

   2. If this cannot be confirmed, please explain and provide the T&D training amount requested by the Company.

b. For calendar years 2001 through 2005, please provide the comparable actual amount of T&D training expense incurred in each year, separately showing safety and non-safety training expense.

c. For calendar year 2006, please provide the comparable actual amount of T&D training expense, separately showing safety and non-safety training expense.

d. Assuming the $963,627 T&D training costs, as revised by the response to part (a) above, the average training cost for each of the 119 T&D employees (i.e., 123 forecast positions less 4 troublemen inspectors) is $8,098. Please explain how HELCO determined that such a level of training for T&D employees was reasonable and necessary, providing a copy of all supporting documentation.

HELCO Response:

a.

   1. The summation total of $963,627 is not correct. The total for Distribution Department training should be $846,300, with $386,400 to Account 925 and $459,900 to Account 926, as shown on page 3 of the HELCO response to CA-SIR-35.

   2. As stated in part 1, the requested total amount for Distribution Department training should be $846,300. In response to CA-SIR-35 the Company explains how the original test year estimate should have been $450,100 for Distribution Department training expense and not $558,829 as previously stated. The adjustment for Distribution

Department training expense in the HELCO T-6 response to CA-IR-447 is $396,200 not $404,798 as the Consumer Advocate summarized. The adjustment for Distribution Department training in CA-IR-447 is the net of the $404,798 ($166,086 + $238,712) increase described on page 4 of 12 of the HELCO T-6 response to CA-IR-447 related to the Safety Improvement Program and the $8,616 decrease in A&G expense related to the delayed hiring of four trouble inspectors described on page 3 of the HELCO T-6 response to CA-IR-447. The total Distribution Department training expense of $846,300 is the total of the corrected test year estimate (direct testimony) of $450,100 (as discussed in the response to CA-SIR-35) and the net adjustment in HELCO T-6 response to CA-IR-447 of $396,200.

b. The historical training expense (net of G/L Code Adjustments- Expense Elements: 406, 422 and 423) incurred by HDO- Distribution Department and charged to Account 925 were as follows:

- 2001 $92,177
- 2002 $108,968
- 2003 $110,127
- 2004 $55,803
- 2005 $136,318

In addition, training expense (net of G/L Code adjustments) incurred by HDO-Distribution Department and charged to Account 926 for the same calendar years were as follows:

- 2001 $95,434
- 2002 $164,494
- 2003 $131,729
- 2004 $248,471
- 2005 $206,984

c. The recorded training expense for 2006 (net of G/L Code Adjustments- Expense Elements:

406, 422 and 423) incurred by HDO- Distribution Department and charged to Account 925 was $278,498. In addition, the recorded training expense for 2006 (net of G/L Code adjustments) incurred by HDO-Distribution Department and charged to Account 926 was $436,352.

d. The level of training for T&D employees is determined by the Department Supervisors and Department Manager. The Manager and Supervisors review the Company's Accident Prevention Manual (copy can be provided upon request) and OSHA regulations to determine required safety training. The Manager and Supervisors also consult with the HELCO Safety Division and Distribution Department employees to assist with determining the appropriate level of training. The training must provide the basic knowledge and skill levels to meet the requirements for the job as required by law. Training such as First Aid, CPR, Hazcom, Driver Improvement training for CDL drivers, enclosed space training, lead/asbestos handling, respirator use, pole top and bucket rescue and forklift training fall in this area. The Manager and Supervisors also determine the other safety related training required for the various positions in the Department. Training such as lockout tagout procedures, electrical grounding, rigging, fall protection, work area protection, driver training, care and use of PPEs, underground and overhead work procedures are examples of this kind of training. Attachment 1 is the safety training plans for the C&M divisions and Technical divisions that were developed in 2005 for 2006 that capture the mandated training and other safety training. Attachment 1 is confidential and will be provided pursuant to Protective Order No. 22593, dated June 30, 2006.

The Manager and Supervisors also review past accidents and incidents, and other areas of risks and make changes to the safety training plan accordingly. The change in

training approach referred to in the response to CA-SIR-36, part a, involved more "hands-on" or field training and began in March of 2006 after a re-evaluation of the training program was done. This re-evaluation process began in October 2005. The process involved review of 2005 Industrial and Vehicle incidents, brainstorming sessions, consulting with MECO counterparts, and consulting with HELCO Safety Division. Pages 12-19 of the Safety Improvement Plan provided as Attachment 4 in the HELCO T-6 response to CA-IR-447 reflect the changes that were made. Attachment 2 is a list of Accidents and Incidents as of October 2005 that was reviewed by the Manager and Supervisors to begin the Safety Improvement Plan process. Attachment 3 is a list of 2006 Industrial and Vehicle Incidents (as of February 2006) that was reviewed by the Manager and Supervisors as part of the process. Attachment 4 is the Manager's Safety Improvement Plan that was developed without the direct involvement of the Company President and Administration Manager. Attachment 4 is confidential and will be provided pursuant to Protective Order No. 22593, dated June 30, 2006. Attachment 5 is the list of questions to MECO counterparts and their responses. Attachment 4 of HELCO T-6 response to CA-IR-447 is the Safety Improvement Plan that was developed with the involvement of the Company President and the Administration Manager.

HELCO utilized an independent auditor to review the level of training planned for employees. A copy of the audit report was provided as Attachment 8 to HELCO T-6 response to CA-IR-447. The safety audit report supports the expanded level of training that began in 2006.

CA-SIR-37

Ref: HELCO T-6 Response to CA-IR-447 (T&D Safety Improvement Program).

The HELCO T-6 response to CA-IR-447 proposes, in part, to increase T&D employee training expense by $404,798. This response also indicates that the Company's original filing included $558,829 of T&D training. Please provide the following:

a. According to the above information, the Company is now proposing to include, in the test year forecast, $963,627 for T&D training.

   1. Please confirm that this summation accurately represents HELCO's recommendation.

   2. If this cannot be confirmed, please explain and provide the T&D training amount requested by the Company.

b. For calendar years 2001 through 2005, please provide the comparable actual amount of T&D training expense incurred in each year, separately showing safety and non-safety training expense.

c. For calendar year 2006, please provide the comparable actual amount of T&D training expense, separately showing safety and non-safety training expense.

d. Assuming the $963,627 T&D training costs, as revised by the response to part (a) above, the average training cost for each of the 119 T&D employees (i.e., 123 forecast positions less 4 troublemen inspectors) is $8,098. Please explain how HELCO determined that such a level of training for T&D employees was reasonable and necessary, providing a copy of all supporting documentation.

HELCO Response:

a.

   1. The summation total of $963,627 is not correct. The total for Distribution Department training should be $846,300, with $386,400 to Account 925 and $459,900 to Account 926, as shown on page 3 of the HELCO response to CA-SIR-35.

   2. As stated in part 1, the requested total amount for Distribution Department training should be $846,300. In response to CA-SIR-35 the Company explains how the original test year estimate should have been $450,100 for Distribution Department training expense and not $558,829 as previously stated. The adjustment for Distribution

Department training expense in the HELCO T-6 response to CA-IR-447 is $396,200 not $404,798 as the Consumer Advocate summarized. The adjustment for Distribution Department training in CA-IR-447 is the net of the $404,798 ($166,086 + $238,712) increase described on page 4 of 12 of the HELCO T-6 response to CA-IR-447 related to the Safety Improvement Program and the $8,616 decrease in A&G expense related to the delayed hiring of four trouble inspectors described on page 3 of the HELCO T-6 response to CA-IR-447. The total Distribution Department training expense of $846,300 is the total of the corrected test year estimate (direct testimony) of $450,100 (as discussed in the response to CA-SIR-35) and the net adjustment in HELCO T-6 response to CA-IR-447 of $396,200.

b. The historical training expense (net of G/L Code Adjustments- Expense Elements: 406, 422 and 423) incurred by HDO- Distribution Department and charged to Account 925 were as follows:

- 2001 $92,177
- 2002 $108,968
- 2003 $110,127
- 2004 $55,803
- 2005 $136,318

In addition, training expense (net of G/L Code adjustments) incurred by HDO-Distribution Department and charged to Account 926 for the same calendar years were as follows:

- 2001 $95,434
- 2002 $164,494
- 2003 $131,729
- 2004 $248,471
- 2005 $206,984

c. Actual calendar year 2006 data is not available at this time but will be provided in late

January 2007.

d. The level of training for T&D employees is determined by the Department Supervisors and Department Manager. The Manager and Supervisors review the Company's Accident Prevention Manual (copy can be provided upon request) and OSHA regulations to determine required safety training. The Manager and Supervisors also consult with the HELCO Safety Division and Distribution Department employees to assist with determining the appropriate level of training. The training must provide the basic knowledge and skill levels to meet the requirements for the job as required by law. Training such as First Aid, CPR, Hazcom, Driver Improvement training for CDL drivers, enclosed space training, lead/asbestos handling, respirator use, pole top and bucket rescue and forklift training fall in this area. The Manager and Supervisors also determine the other safety related training required for the various positions in the Department. Training such as lockout tagout procedures, electrical grounding, rigging, fall protection, work area protection, driver training, care and use of PPEs, underground and overhead work procedures are examples of this kind of training. Attachment 1 is the safety training plans for the C&M divisions and Technical divisions that were developed in 2005 for 2006 that capture the mandated training and other safety training. Attachment 1 is confidential and will be provided pursuant to Protective Order No. 22693, dated June 30, 2006.

The Manager and Supervisors also review past accidents and incidents, and other areas of risks and make changes to the safety training plan accordingly. The change in training approach referred to in the response to CA-SIR-36, part a, involved more "hands-on" or field training and began in March of 2006 after a re-evaluation of the training program was done. This re-evaluation process began in October 2005. The process

involved review of 2005 Industrial and Vehicle incidents, brainstorming sessions, consulting with MECO counterparts, and consulting with HELCO Safety Division. Pages 12-19 of the Safety Improvement Plan provided as Attachment 4 in the HELCO T-6 response to CA-IR-447 reflect the changes that were made. Attachment 2 is a list of Accidents and Incidents as of October 2005 that was reviewed by the Manager and Supervisors to begin the Safety Improvement Plan process. Attachment 3 is a list of 2006 Industrial and Vehicle Incidents (as of February 2006) that was reviewed by the Manager and Supervisors as part of the process. Attachment 4 is the Manager's Safety Improvement Plan that was developed without the direct involvement of the Company President and Administration Manager. Attachment 4 is confidential and will be provided pursuant to Protective Order No. 22593, dated June 30, 2006. Attachment 5 is the list of questions to MECO counterparts and their responses. Attachment 4 of HELCO T-6 response to CA-IR-447 is the Safety Improvement Plan that was developed with the involvement of the Company President and the Administration Manager.

HELCO utilized an independent auditor to review the level of training planned for employees. A copy of the audit report was provided as Attachment 8 to HELCO T-6 response to CA-IR-447. The safety audit report supports the expanded level of training that began in 2006.

Confidential Information Deleted
Pursuant to Protective Order No. 22593.

This page intentionally left blank.

DISTRIBUTION DEPARTMENT
INDUSTRIAL AND VEHICLE INCIDENTS FOR 2005

Distribution Department – 2005 Incidents

INDUSTRIAL INCIDENTS

January 31, 2005

Incident:
An employee was cutting a band holding the cardboard on a reel of underground cable. Cutting with his right hand, he was facing the reel and pulling toward his left. His left hand was held up, when the band cut through, the knife made contact with his left forearm.

Steps to prevent recurrence:
Employees were instructed to use band cutters.

February 17, 2005

Incident:
An employee was cutting metal straps off of a loaded flatbed trailer with bolt cutters. After cutting a strap and trying to release it from the trailer, the end of the strap sprang toward the employee, slicing a hole through his shirt and cutting his stomach.

Steps to prevent recurrence:
Band cutters have been purchased. A warning has been provided to Distribution as well as Production employees to use caution while cutting bands.

February 25, 2005

Incident:
While crimping secondary crimps at the weather head with a hydraulic crimper, an employee's left index finger was injured when the arm of the crimper was retracting. The employee was holding the weight of the crimper with his right hand on the hydraulic crimper cylinder.

Steps to prevent recurrence:
Better tooling was researched for use but it was ultimately decided that the new tool would be just as hazardous, if not more so, than the present tool being used. All C&M divisions were informed of the incident and were reminded to be wary of the retracting action of the crimper head as well as the compression.

DISTRIBUTION DEPARTMENT
INDUSTRIAL AND VEHICLE INCIDENTS FOR 2005

March 11, 2005

Incident:
While an employee was in the process of switching, a single leg cut out. As he caught himself, his left thumb was bent backwards.

Steps to prevent recurrence:
It was stressed to personnel how important it is to continue practicing proper climbing techniques, either while climbing the pole or descending.

March 14, 2005

Incident:
As an employee was closing a substation gate, his right thumb knuckle got caught in a pinch point. He also noticed the gate is a bit crooked on one side, which may be the cause of the pinch point.

Steps to prevent recurrence:
The gate should be readjusted so that the space between the gate and movable rod is approximately 1 ½" and uniform. Employees still need to use caution while performing duties. Inform other personnel of the hazard at this particular substation and the possibility of a similar hazard at other locations.

March 29, 2005

Incident:
The employee entered a manhole using a ladder to install nuts and washer, securing bolt and eye in order to lift the cover with the winch truck. He felt pain in his lower back after climbing out.

Steps to prevent recurrence:
This employee did complete his morning stretch the day of the incident. Repositioning the ladder may have prevented him from stretching in an awkward position. The incident was discussed with the work group to avoid future occurrences.

March 29, 2005

Incident:
As an employee was climbing down a double bucket during safety training, his left knee gave out as he stepped onto the ground, resulting in a twisted knee. This particular truck had been previously modified and a step had been removed (due to constant contact with the ground, damaging the step). This was a lost time incident.

DISTRIBUTION DEPARTMENT
INDUSTRIAL AND VEHICLE INCIDENTS FOR 2005

Steps to prevent recurrence:
The step has been re-installed. Personnel had been made aware of the hazards of stepping up and down the trucks. In the future, these types modifications should not be done.

April 12, 2005

Incident:
An employee was tightening bolts on an interrupter of a circuit breaker when oil from the interrupter splashed him in the right eye. He washed his eye out with soap and water.

Steps to prevent recurrence:
This incident was discussed with other personnel and they were re-instructed to use safety glasses while working on equipment that had been drained and residual oil is present. Goggles are to be used while working on filled equipment.

April 17, 2005

Incident:
A chain saw was being used to clear a portion of a tree, but it was not cutting the branches easily. The saw was placed on the end of the left rail of a service bucket and a cane knife was utilized instead. While the employee in the bucket was in the process of racking the boom, the employee on the ground noticed the chainsaw was in the path of the bucket. He stepped onto the back of the truck in an effort to remove the chain saw from the rail and placed his left hand on the end of the rail for leverage while he reached for the saw with his right hand. This resulted in the bucket smashing his left hand.

Steps to prevent recurrence:
This incident has been reviewed with other personnel in the work group. It was suggested that the employee on the ground call out to the employee in the bucket to have the descent of the bucket stopped before attempting to get the chain saw. The accident could also have been prevented if the chain saw was promptly put away in the cabinet when it no longer was being used. Better communication between co-workers was stressed to personnel.

April 25, 2005

Incident:
After operating a forklift for approximately one hour, an employee felt a slight tingling sensation in the area of his left palm. On occasion, this feeling will travel up his arm, especially during times when he is operating the forklift continuously.

Steps to prevent recurrence:
The supervisor will investigate stretching and other equipment that may help prevent future incidents.

DISTRIBUTION DEPARTMENT
INDUSTRIAL AND VEHICLE INCIDENTS FOR 2005

May 12, 2005

Incident:
While pulling one span of aerial cable to put on the winch, the employee felt a small pop and then pain in the front of his shoulder. At the time of the incident, the employee did not realize he had been injured. The incident was reported the following morning.

Steps to prevent recurrence:
This employee diligently performs stretching exercises every morning. The task could have been set-up to allow co-workers on the ground or other equipment to bear the load of the span of aerial cable.

June 1, 2005

Incident:
A lineman and a substation electrician were assigned to work in a double bucket in a substation. While guiding bucket truck winch lifting a 69KV capacitor, the substation electrician's right pinky finger got caught between the rope and roller and was smashed.

Steps to prevent recurrence:
Warned employees not to place their hands near the winch. Employees need to be aware of pinch hazards and taglines should be used, if necessary. Employees who are not experienced with equipment should be properly trained and briefed before the equipment is used.

July 13, 2005
Incident:
A bug flew into a substation electrician's eye while working in a switchgear cabinet. Safety glasses were worn at the time of the accident.

Steps to prevent recurrence:
Crews were advised to inspect switchgear for bug infestation prior to working in the switchgear.

August 4, 2005
Incident:
While winching up guy wire on the ground pain was felt in the right shoulder.

Steps to prevent recurrence:
Use of a large truck to relieve tension on the guy wire was one of the recommendations to prevent injury. Another recommendation was to warm-up at the job site prior to performing this kind of task.

DISTRIBUTION DEPARTMENT
INDUSTRIAL AND VEHICLE INCIDENTS FOR 2005

August 12, 2005
Incident:
While inserting T-bar into cable reel the T-bar slipped and pinched the employee's finger. A broken finger resulted from the accident.

Steps to prevent recurrence:
Process was changed to use a sling and a forklift to hold the T-bar while it is inserted in the cable reel.

September 8, 2005
Employee was shocked by energized open wire secondary conductors. The employee began work on the secondary conductors prior to it being de-energized and grounded. Employee contacted energized conductor and neutral conductor simultaneously. Employee was not wearing secondary rubber gloves at the time.

Steps to prevent recurrence:
Employees were re-instructed on testing and grounding procedures, and requirements to treat conductors as energized until grounded.

October 7, 2005
Incident:
Employee fell into handhole when the metal cover flipped open while employee walked over it.

Steps to prevent recurrence:
The handhole was repaired. All other handholes in the area were inspected for defects.

October 20, 2005
Incident:
Lineman and lineman apprentice received burns from primary voltage conductors while working in a double bucket. The incident investigation is in progress. Both injured employees were not wearing proper personal protective equipment required for the task.

Steps to prevent recurrence:
Investigation is in progress.

DISTRIBUTION DEPARTMENT
INDUSTRIAL AND VEHICLE INCIDENTS FOR 2005

VEHICLE INCIDENTS

January 12, 2005

Incident:
As an employee was driving a company van under an eating establishment's awning, the top of the ladder rack scraped the awning, tearing the edge of the roof. This was a new van and the driver was unfamiliar with the height, which was nearly a two foot increase over the van he previously drove.

Steps to prevent recurrence:
Clearance heights of vans should be posted inside the van, allowing drivers to be aware of clearance heights. Employees were reminded to watch their clearances upon entering structures and drive-thrus.

March 24, 2005

Incident:
As an employee was reversing a forklift, he backed into a parked company vehicle, scratching and bending the front corner of the driver's side and cracking the headlight trim.

Steps to prevent recurrence:
Check for clearances in the area surrounding a vehicle before moving. Remove nearby obstructions, if possible, prior to operating a forklift. Guidance from someone to maneuver the forklift in tight quarters is suggested.

April 8, 2005

Incident:
Customer complaint: Customer claims a HELCO vehicle was traveling at a very high speed, passing other vehicles recklessly.

Investigation of the incident attributed the complaint to the following circumstance: As an employee was traveling on a two lane Highway, he was several vehicles behind a slow moving vehicle. Upon arriving at a section of the highway with a passing lane, all cars following the slow moving vehicle proceeded to move into the left lane to safely pass ahead of this vehicle. The HELCO driver moved back into the right lane after passing the slow moving vehicle. Being aware of the need to merge ahead, and seeing a car behind in the left lane a distance away, the employee accelerated to increase the distance from the approaching car. After obtaining safe clearance the HELCO driver merged back to the left lane. The HELCO driver was not traveling at the high speed the customer claimed.

DISTRIBUTION DEPARTMENT
INDUSTRIAL AND VEHICLE INCIDENTS FOR 2005

Steps to prevent recurrence:
This incident has been discussed with Fleet personnel. The driver's actions to accelerate to create space between vehicles was found to be reasonable. Driver training was conducted for all of the personnel in the Division. Drivers were encouraged to change lanes earlier or in this instance, remain in the left lane if they are driving at the speed limit.

April 19, 2005

Incident:
In the process of entering a parking structure a service bucket with an improperly stowed boom damaged the roof of the parking structure. The truck was not operating properly at the time with its stowing being slow and inconsistent. The clearance height of the garage is also low.

Steps to prevent recurrence:
The incident was discussed with the rest of the work group and personnel were reminded to ensure the boom is properly stored. The boom was repaired shortly after the incident. Any defects or improper operation of vehicles should be reported and corrected promptly.

April 26, 2005

Incident:
As an employee was pulling out of a parking space, the engine of his vehicle shut-off and all power went out. Ten seconds later, it came back on. The employee re-started the vehicle and began to move forward when he noticed smoke from the hood. Stopping the vehicle, he found smoke and flames coming from around the battery. He used the fire extinguisher, put out the fire and informed Dispatch of the incident.

Steps to prevent recurrence:
The cause of the incident was wiring to an inverter at the rear of the van which was located near the muffler. This vehicle had equipment installed the week before. Modifications to the wiring and inverter were made. The fire extinguisher has been replaced.

May 3, 2005

Incident:
While maneuvering to enter a narrow driveway, the cabinet door of a service bucket scratched the bumper of a parked private vehicle. Construction activity was taking place near the work site. The area was very congested and cars were parked along the streets and driveways wherever there was any room. The private vehicle was parked illegally near the driveway.

Steps to prevent recurrence:
Employees were informed to leave the work site should they be unable to access the site safely.

DISTRIBUTION DEPARTMENT
INDUSTRIAL AND VEHICLE INCIDENTS FOR 2005

May 18, 2005

Incident:
In the process of reversing a double bucket truck through a pasture and maneuvering through gates, the fender of the bucket hooked up onto the gate.

Steps to prevent recurrence:
Have someone guide the driver and spot while maneuvering through tight areas. Even in remote areas, there are hazards present.

June 15, 2005

Incident:
Customer complaint: Customer claims employee cut through three lanes of traffic traveling at a high speed in order to make a left turn at an intersection ahead.

Employee was driving in the farthest right lane, stopping at the light. When the light turned green, the driver proceeded forward, using the turn signal. When the driver was at least two car lengths ahead of the vehicle in the next left lane, the driver entered the lane. Upon verifying the next left lane was safe, the driver moved another lane over.

Steps to prevent recurrence:
Although there were no infractions in this case, Employees should consider using alternate routes if lane changing is difficult in heavy traffic situations.

June 21, 2005

Incident:
As an employee was backing a company vehicle out of a parked stall, the front bumper of the vehicle made contact with another parked company sedan, breaking its passenger side mirror.

Steps to prevent recurrence:
Walk around the vehicle to be aware of the hazards before moving it. Seek assistance from other employees if they are available.

July 1, 2005
Incident:
A single bucket truck boom snagged communications cables and fell to driver's side while exiting a driveway. The boom was left in an elevated position while being driven.

Steps to prevent recurrence:
All employees were briefed on the incident and reminded to follow procedures before moving vehicles.

DISTRIBUTION DEPARTMENT
INDUSTRIAL AND VEHICLE INCIDENTS FOR 2005

July 18, 2005
Incident:
While driving a van on an access road overgrown with vegetation the van slide and struck and object in the tall grass.

Steps to prevent recurrence:
Route selection was poor in this instance. Employee was counseled to use an alternate route that had less vegetation. Improvements to the access roads in the area are being made.

August 29, 2005
Incident:
While backing a single bucket truck the right rear of the vehicle struck a parked car. A second man was available to guide the truck while reversing but was not used.

Steps to prevent recurrence:
Employees were counseled to used the second man as a swamper when available.

DISTRIBUTION DEPARTMENT
INDUSTRIAL AND VEHICLE INCIDENTS FOR 2006

Distribution Department – 2006 Incidents

INDUSTRIAL INCIDENTS

January 10, 2006

Incident:
An employee was struck on his right knee when a manhole lid lifter was dropped while another employee was passing it to him. The lid lifter struck the right outer side of his knee and caused some momentary discomfort.

Steps to prevent recurrence:
Extra care and attention must be exercised while handling tools and equipment.

January 13, 2006

Incident:
An employee reported that he felt pain in his right shoulder while climbing a ladder to work on a temporary pole and later while climbing up onto a service bucket.

Steps to prevent recurrence:
Extra time must be given for stretching and conditioning exercise before beginning work that involves lifting, climbing, reaching, bending etc.

January 17, 2006

Incident:
An employee hyper extended his right shoulder when he cut out while descending a pole. The employee reported that he fell approximately 18 inches and recovered from the fall when his right arm draped over the side walk guy pipe.

Steps to prevent recurrence:
Employees have been instructed to take extra care and to assess the pole condition before ascending the pole.

February 21, 2006

Incident:
An employee lost his balance and fell from a ladder while installing grounding to transformer primary cables.

DISTRIBUTION DEPARTMENT
INDUSTRIAL AND VEHICLE INCIDENTS FOR 2006

Steps to prevent recurrence:
Discuss use of taller ladders and/or bucket truck, better ladder placement and helper's familiarity with work.

VEHICLE INCIDENTS

February 8, 2006

Incident:
While reversing to turn Company vehicle around, employee struck another party's vehicle that was following too close behind.

Steps to prevent recurrence:
When available, a second person should be used as guide in difficult backing situations.

February 20, 2006

Incident:
Vehicle was being used to clear a path and work area for the bucket truck when the tail pipe was damaged by a hidden object. The right rear tire was also flattened.

Steps to prevent recurrence:
Crew members should check the area for hazards before entering the area with vehicles. Other options will be sought.

Confidential Information Deleted
Pursuant to Protective Order No. 22593.

This page intentionally left blank.

Safety Questions For MECO

1. How do you run your APM Reviews? Construction: We review the APM during crew meetings and working foreman meetings. We also integrate the APM into all of our training sessions.

2. How do you ensure understanding amongst Personnel? Construction: We accomplish understanding through effective communication processes. Our meetings are held in an atmosphere of inclusion where all thoughts are valued and all opinions are welcomed. We also promote a true open door policy where we stop what we are working on and truly listen to employees concerns and ideas. When employees identify problems, concerns, or safety issues we follow through with action and include the employee in the process. We then include these outcomes in future crew and working foreman meetings, often having the employee that brought the issue to light describe the issue to the group and how we jointly proposed to resolve it. We encourage employees to not just find problems, but to also find solutions, or at the very least to help us find solutions. In this manner buy-in by the line crew is greatly improved on and it encourages employees to believe they have a voice and that it has weight. In time, employees do not see us as "bosses", but as resources and partners. When this happens, the culture of the line crew switches from confrontation and skepticism to collaboration and ownership.

3. How do you ensure compliance of safety rules amongst Personnel? Construction: Primarily by teaching safe work practices and tying the benefits of working safely directly to the employee. This is accomplished through constant reminders and refresher training. During training it is crucial to communicate real life situations and experiences that clearly demonstrate why specific safety rules were instituted. Once employees understand the whys and the benefits, they generally will be inclined to see that it is in their best interest to follow the rules. The reminders are to build familiarity with the policy so that the information becomes ingrained. It is not enough to just state a safety practice as a rule that has a discipline penalty if one is caught breaking it. Instead, we must make employees understand that the rule is theirs and make them want ownership of it. When this happens, outside enforcement becomes unnecessary as workers will self-enforce the rules-- rules which then become work practices, and in time an integral part of the employee's safety culture.

4. How do you deal with ambiguous or vague statements in the APM? Construction: We see them as an opportunity that we take advantage of by defining our own best practices for specific situations and conditions. We encourage working foreman to consult their supervisors for guidance on situations where the APM is not clear. In general, these vague and ambiguous statements have been explored, and where they are material they have been brought to the attention of the crews during training sessions. At that time we establish a definitive understanding of how they will be interpreted and followed. In all cases we stress the fluid one-size-does-not-fit-all nature of line work and encourage a thoughtful approach to work that includes seeking the help and guidance of others, including experts from other areas.

5. What type of Work Procedures do you have documented? Construction: We have documented procedures for three phase transformer change-outs, working in elevated wind conditions, and U/G cable testing equipment specific procedures.

6. How often do you cover the work procedures with Personnel? Construction: Yearly or every two years we have refresher training in the following areas:
   - Grounding: Every year, includes class room and field work
   - U/G practices and procedures: Every two years, includes all aspects of U/G work practices, company policies pertaining to, and all applicable APM and Work Standards. Includes class and field work.
   - U/G cable fault finding: Every two years, includes review of procedures, best practices, safety awareness, and review of all test equipment (includes: locators, toners, VLF, AVO HiPot systems, DART systems). Includes class and field work.
   - Transformers 101 and 102: Every other year, includes all aspects of single and three phase transformer connections, trouble-shooting, understanding name plates, applications, and safety concerns. Includes class work, online self-paced training course (purchased), and some field work.
   - Overhead work practices: Every other year, includes all aspects of overhead work, including safety concerns, company policies, best practices, and Work Standards. Class only.
   - In addition, we have a working foreman meeting once a month on a Friday where safety, work practices, best practices, and all other concerns (both management and BU) are openly discussed. These meetings are followed up by a full Construction department meeting on the following Tuesday. At this meeting we have open discussion on all aspects of our work, with a focus on safety and worker/mgt concerns. Employees that bring up concerns are openly encourage to help find solutions and are given the resources and time to do so. All matters without an immediate solution are tabled to the next meeting and are always followed-up on. Consistency and follow through are key to maintaining a positive culture.

7. How do you ensure that people using your test equipment is familiar with the hazards of the equipment? Construction: No employees are allowed to use equipment they have not been trained on, except when working in an OJT type situation under the direct supervision of a qualified employee. All new equipment is presented to the crews and proper use is explained and demonstrated. New equipment that is unlike other equipment that the employees are familiar with is always purchased with manufacturer's training included in the cost. Yearly refresher training on key equipment used in key job processes, such as U/G fault finding, is provided in order to keep employees up to date on proper use, proper procedures, proper techniques, proper care, and the safe use of equipment. Records of training are kept on record.

8. How do you discipline personnel for not following APM procedures or work procedures? Construction: Discipline is administered in accordance with company policy, but is viewed in the context of the situation. Minor infractions are corrected at the time and warnings are issued at the time, but a record of the incident is also kept. Repeat offenders are subject to the progressive discipline principles of the APM. Major offenses are all different and the discipline incurred as a result is often decided at the corporate level.

9. How do you disseminate accident information to other employees to heighten awareness and learn from the incident? Construction: We hold an informal line crew meeting the morning following any incident, near miss, safety concern, or accident that is brought to our attention, at which time confirmed information relating to the incident is passed on. This prevents rumors and misinformation from starting to circulate. If enough information about an incident is known that it allows for conclusions to be arrived at, then we take this meeting opportunity to review applicable work practices, applicable company policies, safety points, and to solicit employee feedback and ideas on how the incident could have been prevented. If we do not have the information to make conclusions about incidents, such as incidents that occur at our sister companies and are still being investigated, we make the promise that as soon as we get further information we will meet again, and we always follow-up on these promises.

10. Fall Protection – Transformers…Construction: doesn't apply

11. Grounding – How does the substation crews apply grounds to elevated locations i.e. high side of substation transformer. Do they apply with 6 ft shotgun stick from ladder? If they have to go over 4 feet off the ground on the ladder while managing the shotgun stick, are they required to have fall protection? Do they utilize scaffolding or a man-lift in their daily work? Do you allow extending ground zones through equipment like circuit breakers by closing them and disabling the DC? For 69KV capacitor banks, if you need to replace one or two caps, how do you ground? Do you consider the possibility that if you only ground one side of the capacitor bank and one of the cap units fail open, the other units on the other side of the open cap could still be charged? After grounding the cap bank, do you still ground and short capacitors with a grounding stick or assume the bleed resistor is always working. With regarding to grounding a good transformer, if the secondary terminations are taped and terminated, do you allow only grounding the primary side and considering it effectively grounded? Construction: We have a comprehensive grounding course that is repeated yearly. Once the crews understood grounding, which few people in the industry really do, they became promoters of proper grounding procedures. It takes education and training and the rest follows naturally.

12. Ladder Safety – do you allow working off a ladder above 4 feet involving work that requires two hands? Do you always tie off the ladder at the top of an extension ladder?...what are the exceptions to this? Are there instances where you work off a ladder and have fall protection even if you're not reaching beyond normal arms length? Construction: doesn't apply

13. Substation Transformer Enclosed Space – how do you address someone entering a transformer through the manhole? How do you set up rescue for this situation? Can't really install A-frame structure above transformer in the middle of an energized switching station. Construction: doesn't apply

14. Helper/Apprentice Training and Management – How do you ensure that training for helpers and apprentices are consistent? Journeymen all have different levels of experience, knowledge and training techniques. This can lead to inconsistent training and development of new employees. Other than "field" experience and books, do you manage the training in any other way? How do you manage apprentices, do you ever allow more than one apprentice to one journeyman?...does it depend on the task or is it never allowed? Are helpers/apprentices allowed on callouts? Construction: We have extensive after hour training for apprentices. We also assign each apprentice a mentor. The mentor serves as a conduit for feedback to and from the apprentices and is there to insure that they are developing fully. Mentors are matched to apprentices based on various criteria, but all are senior lineman with good work skills and job knowledge. Helpers and apprentices are utilized on call-outs as needed. We see call-outs as a valuable training aid.

15. Training – are you allowed to obtain safety training outside of MECO's safety division or are you required to go through your safety division only? i.e. for CPR, fall arrest, etc. Construction: We develop and conduct all of our industry specific training in-house and separate from the Safety department. We do encourage Safety to attend our training sessions to improve their overall knowledge, but we are the experts in the field and as such have the best understanding of the needs of our people and the resources available to meet those needs.

16. Welding in substations – how do you handle the need to weld a transformer. On hot-work permit, we're supposed to remove all "combustibles" within a certain distance from work area. However, do you ever weld with transformer full of oil? Can this be accomplished while in compliance with hot-work permit? Construction: doesn't apply

17. Do you have fire protection work procedures for a fire on a substation transformer? How would you respond to something like this? Construction: doesn't apply

18. Substation entry procedures. How do you manage entry into substations to make sure only qualified individuals enter. How do you determine who is qualified? Who manages all this? Construction: Any hot apprentice or lineman may enter a substation to perform their duties as directed by their working foreman, supervisor, or dispatch. Gates are kept locked while crew is in substation.

19. Contract crews in substations – in situations where contract personnel work along side MECO personnel, how do you handle safety issues? i.e. ABB retrofilling transformers, are they using your equipment?...if so, have they been properly trained on the equipment? If they work along side your personnel, how do you know they will work in compliance with the APM? Construction: doesn't apply

CA-SIR-38

Ref: HELCO T-6 Response to CA-IR-447 (T&D Safety Improvement Program).

The HELCO T-6 response to CA-IR-447 proposes, in part, to increase T&D employee training expense by $404,798. This response also indicates that the Company's original filing included $558,829 of T&D training. Please provide the following:

a. Assuming that the Commission allowed recovery of $963,627 of T&D training costs, what assurance can HELCO provide to the Commission and the Company's ratepayers that $963,627 of T&D training costs will be spent each year the rates resulting from this case are in effect? Please explain.

b. Does HELCO anticipate that the expanded T&D training program will result in reduced: accidents, employee injury, lost work time, damage to Company and third party property, as well as liability to employees or third parties? Please explain.

c. Referring to part (b) above, does the Company anticipate that these reductions will reasonably result in cost savings or the avoidance of costs incurred in the past? Please explain.

   1. If so, please provide the Company's best estimate of such cost savings or anticipated reductions.

   2. If so, please explain whether and how such reductions were reflected in the Company's 2006 test year rate case forecast.

HELCO Response:

a. The driver for the new safety program is the safety of the Company's employees. The increased spending for the safety program was prompted by the trend of increasing accidents and incidents that were occurring in years prior to 2006. Since the implementation of the new program, there has been improvement, but accidents and incidents are still occurring. The efforts to improve the Distribution Department's safety performance must continue or the negative trend will return. HELCO implemented the new safety program during the test year and intends to continue with the program in future years. A graph of lost time severity rate (lost time hours per productive hours per 100 employees) showing the past years and the 2006 test year is attached as Attachment 1 to this response.

b. Part of the targeted benefits from the improved program is reduced number of accidents, reduced number of employee injuries, reduced work lost time hours, reduced damage to Company and third party property, and reduced liability to employees or third parties. The graph provided in part a, shows a reduction in the lost time severity rate in the second half of the 2006 test year. As the safety improvement plan was implemented in 2006, we realized a decrease in accidents, severity of accidents, and property damage. While it may be too early to tell whether the safety improvement plan was solely responsible for these decreases, we believe that this plan and the increased safety training from this plan, has had a positive effect in these areas.

c. It is too early to tell what financial impact the safety improvement plan will have on costs to the Company. Work-related injuries have direct financial impact to HELCO and increase our operating costs. Accidents and property damage also result in increased operating costs. It is reasonable to believe that as accidents are reduced and property damage is reduced, related operating costs may be reduced for the Company as well.

   1. The Company did not do a cost estimate for the potential savings due to the benefits from the improved safety program.

   2. The Company has not evaluated the potential savings of reduced accidents and property damage as a result of the safety improvement plan and requires several years of data to sufficiently trend and calculate this information. As such, no adjustment is made to the 2006 Test Year estimate for these costs.

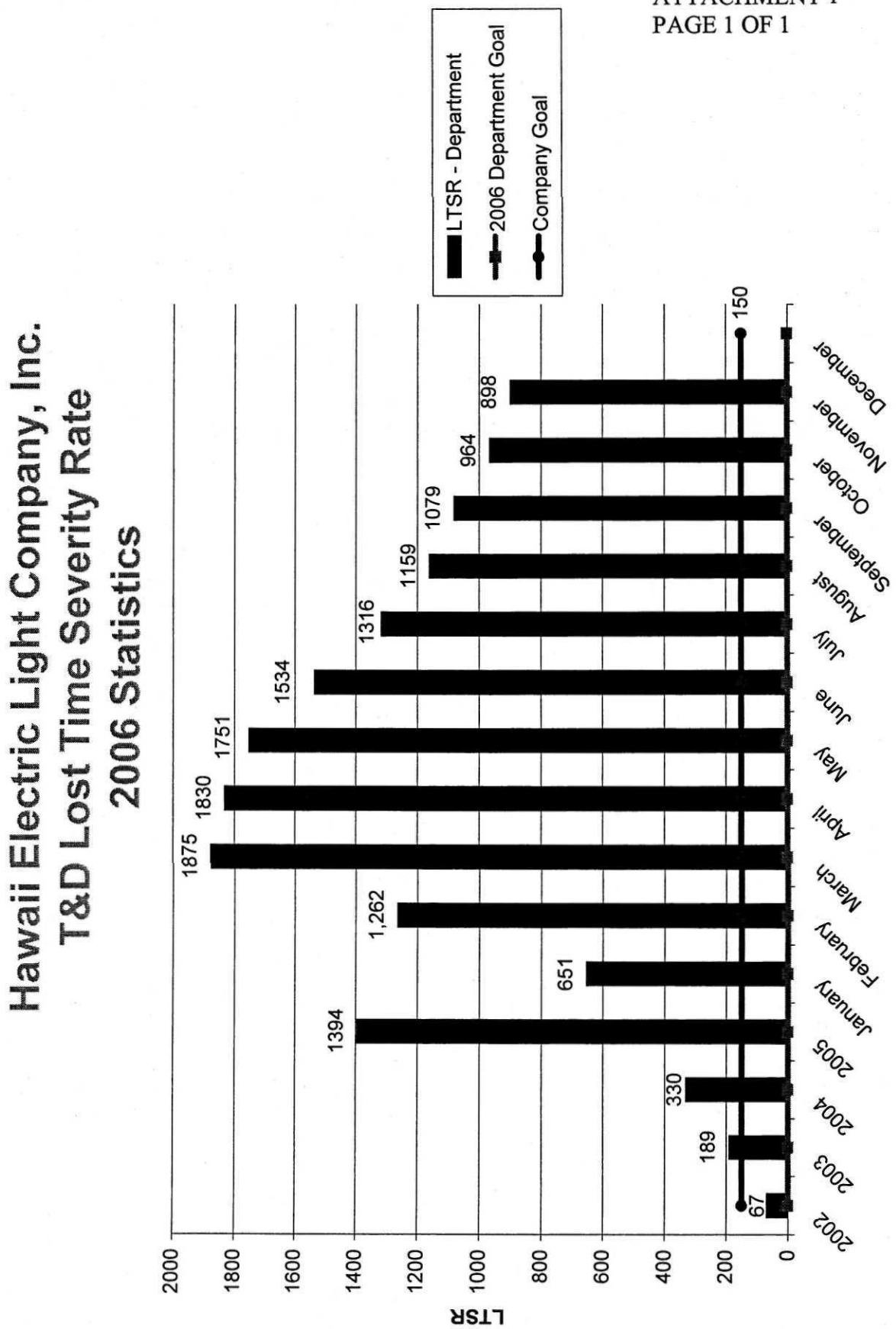
Hawaii Electric Light Company, Inc.
T&D Lost Time Severity Rate
2006 Statistics
LTSR - Department
2006 Department Goal
Company Goal
LTSR
2000
1800
1600
1400
1200
1000
800
600
400
200
0
1875
1830
1751
1534
1316
1159
1079
964
898
1394
1,262
651
330
189
67
150
2002
2003
2004
2005
January
February
March
April
May
June
July
August
September
October
November
December

CA-SIR-39

Ref: HELCO T-6 Response to CA-IR-447, HELCO T-11, page 15, & HELCO-909, page1 (T&D Safety Improvement Program).

The HELCO T-6 response to CA-IR-447 proposes, in part, to increase T&D employee training expense by $404,798. HELCO T-11, page 15, states: "The 2006 test year estimate for safety program costs is $871,000 (see HELCO-909, page 1) which is 74% higher than the average of the last three recorded yearly amounts for 2003 through 2005 ($501,000) and 57% higher than the 2005 recorded charge of $555,000." Please provide the following:

a. According to the above information, the Company is now proposing to include, in the test year forecast, $1,275,798 ($871,000 plus $404,798) for training expense.

   1. Please confirm that this summation accurately represents HELCO's recommendation.

   2. If this cannot be confirmed, please explain and provide the total amount of training expense requested by the Company.

b. Assuming the $1,275,798 of training costs, as revised by the response to part (a) above, HELCO's proposed training expense would be 130% higher than the 2005 amount ($555,000) and 155% higher than the 2003-2005 average ($501,000).

   1. Please confirm these percentage changes.

   2. If these percentage changes cannot be confirmed, please explain and provide a copy of any supporting documentation.

c. Were HELCO's training efforts prior to 2006, particularly for T&D employees, ineffective, misguided or off-target? Please explain.

d. Has HELCO abandoned the training programs offered prior to 2006, particularly for T&D employees, and implemented new training programs that cover subjects not addressed by the pre-2006 training programs? Please explain.

HELCO Response:

a. The 2006 test year safety and security program cost of $871,000 referenced in this CA-SIR is charged to Account 925.01. It should be noted that the test year estimates for Account 925.01 include safety training expense (for the Distribution Department, Production Department and Administration Department) as well as other expenses that are detailed in HELCO T-11 and should not be characterized as safety training only. As discussed in

response to CA-SIR-35, the test year estimate for Distribution Department Safety training inadvertently includes certain on-costs (i.e. corporate administrative, employee benefits and payroll taxes) that should have been reversed out of or excluded from the Distribution Department safety training presented in the original HELCO T-6 filing and also inadvertently omitted adjustments detailed in HELCO-WP-601. The original test year estimate for the safety and security program in Account 925.01 should have been $863,441 ($871,300 - $7,859). HELCO T-6 response to CA-IR-447 proposed to increase T&D safety training expense to Account 925 by $166,086 with an adjustment of ($5,744) for removal of safety training costs related to 4 trouble inspectors, for a net increase of $160,342 to Account 925.01. Furthermore, an adjustment to reduce the Production Department's safety training costs in Account 925.01 by $73,000 was made in HELCO T-5 response to CA-IR-447. Therefore the CA's summation which adds $871,000 to $404,798 to reach a sum of $1,275,798 does not accurately represent HELCO's test year estimate for safety program costs in Account 925.01.

1. This summation is not correct.
2. The total Safety and Security Program expenses in Account 925.01 should be $950,783 ($863,441 + $160,342 - $73,000).

b. As stated earlier, the summation in part a .1. is incorrect, therefore the percentage calculations are incorrect.

1. The percentages are incorrect.
2. The Company used the revised summation amount of $950,783 to recalculate the percentages. The revised estimate of $950,783 is 71% higher than the 2005 recorded amount of $555,000 and 90% higher than the 2003-2005 average of $501,000 for

Account 925.01.

c. A contributing factor to the increase in accidents and incidents in 2006 and recent years prior to 2006 is the larger ratio of new employees to experienced employees. The past training method consisted mainly of review of safety manuals and documents in a classroom setting. This method was adequate when there was a higher ratio of experienced employees to newer employees who could help take the classroom instruction to the field and perform on-the-job training for the newer employees. This method has become ineffective with the higher ratio of new employees to experienced employees.

Much of the increase in cost for the new training program is related to having "hands-on" training for all employees. Employees still review the safety manual and procedures but the training now also provides practice on the work methods in the field. The new training program requires employees to perform and practice tasks under the supervision of instructors. The new program also prescribes consistent work methods for all employees rather than relying upon crew leaders to perform "on-the-job" training sessions for employees.

The Company has also found that improved retraining of experienced employees is necessary. Because HELCO is a small utility, the Company employees are required to perform the entire spectrum of T&D tasks necessary and are not able to be specialists in a subset of skills. Retraining is necessary to reorient even the most experienced employees who perform certain tasks infrequently but must still remain proficient. The new training program provides that kind of retraining for experienced employees.

d. HELCO has added to the training programs offered prior to 2006. As stated in response to part c., past training was predominately classroom review of safety manuals and procedures.

Reviews are still necessary but HELCO has added "hands-on" training sessions for employees. Some subjects such as ladder safety, overhead energized work and underground energized work are covered in more detail in the new training program as opposed to the pre-2006 training programs.

CA-SIR-40

Ref: HELCO T-6 Response to CA-IR-447 (T&D Safety Improvement Program).

Confidential Attachment 4 (pages 16-19) to the HELCO T-6 response to CA-IR-447 lists various safety topics and proposed course dates for the Distribution Department Safety Improvement Plan. Please provide the following:

a. Does this listing accurately represent the new safety program offerings that comprise HELCO's new T&D training adjustment, which increases test year expense by $404,798? If not, please explain and identify each program added to or deleted from such list.

b. Are the planned dates for holding sessions for each safety topic accurate? If not, please provide the actual or revised proposed month/year for each safety topic.

c. Is the proposed frequency for each safety topic still accurate? If not, please provide the actual or revised proposed frequency for each safety topic.

d. In 2006, the proposed schedule identifies twelve (12) safety topics to be addressed in 2006, with seven (7) to be conducted every two years and five (5) to be conducted one time (except for new employees). Please provide the following:

   1. Does HELCO consider the frequency of the safety topics offered in 2006 to be representative of future safety sessions? Please explain.

   2. Does 2006 represent front loaded training activity, due to the renewed focus on employee safety training, unlikely to reoccur on an annual basis? Please explain and provide a copy of any supporting documentation.

HELCO Response:

a. No, CA-IR-447, HELCO T-6, Attachment, 4, pages 16-19, represent the training program for only employees belonging to the Technical Division (RA-HDC). The training programs for employees belonging to the Hilo, Kona and Waimea Construction and Maintenance ("C&M") Divisions (RA-HDH, RA-HDK, and RA-HDW) are shown on Attachment 4, pages 12-15. Together, Attachment 4, pages 12-19 represent the new T&D safety program offerings for training.

b. Yes, the plan dates in Attachment 4, pages 16-19 for year 2007 are accurate with possible adjustments due to emergencies or other unanticipated events. The plan dates in Attachment

4, pages 12-15 reflect the 2006 schedule but the 2007 schedule will follow the 2006 schedule closely.

c. Yes, the proposed frequency of each safety topic is still accurate.

d.

1. The frequency of safety topics offered in 2006 (as provided on Attachment 4, pages 12-15) is representative of future safety sessions for the C&M Divisions. The frequency of safety topics for the Technical Division will vary by year per the schedule presented on Attachment 4, pages 16-19.

2. For the C&M Divisions, the new training program established in 2006 is the baseline for training to occur on an annual basis. For the Technical Division, increased training was established in 2006 and this higher level of training will continue per the schedule presented on Attachment 4, pages 16-19.

CA-SIR-41

Ref: HELCO T-9 Response to CA-IR-448 (Mincom Corrections).

Referring to page 3 of the response to CA-IR-448, please provide the following:

a. Was there any change in scope or extent of services provided by Mincom during 2006 as compared to 2005? Please explain.
b. Please provide a copy of the Mincom monthly invoices supporting the $167,231 of 2006 processing fees set forth on page 3.

HELCO Response:

a. As a clarification to HELCO's response to CA-IR-448, when referring to "Mincom (or Ellipse) processing fees", these costs relate to the HECO Data Center labor and non-labor costs incurred by HECO for operating the Company's "mainframe" computer system and allocated to the various user companies. This includes application labor costs from HECO's Information Technology and Services ("ITS") Department personnel (approximately 40% of total data center costs for 2006), data center software costs primarily from IBM (approximately 46% of total data center costs for 2006) and other data center non-labor costs not software related (approximately 14% of total data center costs for 2006). The only significant change in scope or extent of services provided by the HECO Data Center from 2005 to 2006 was an increase in IBM software maintenance charges by approximately $50K in 2006, a portion of which were allocated to HELCO.

b. Copies of the HECO intercompany billings to HELCO are attached. See pages 2 – 25.

Hawaii Electric Light Company, Inc.
MIMS Reallocation
Jan, 2006

(RA=HAA)
(EE=501)

Coding:	%	Jan, 2006	Charged To	Acct No
24200 000	100.00%	(36,270.36)		
FI000476	15.43%	5,596.56	A&G Operations	921.00
FI000478	3.86%	1,400.04	A&G Operations	921.00
FI000479	7.72%	2,800.07	A&G Operations	921.00
FI000480	3.86%	1,400.04	A&G Operations	921.00
FI000481	13.65%	4,950.90	A&G Operations	921.00
FI000482	13.65%	4,950.90	A&G Operations	921.00
FI000642	10.54%	3,822.90	A&G Operations	921.00
FI000644	10.54%	3,822.90	Distribution Operations	583.00
FI000485	1.04%	377.21	Production Maintenance	514.00
FI000486	2.08%	754.42	Transmission Operations	566.00
FI000487	7.27%	2,636.86	Distribution Maintenance	598.00
FI000488	1.30%	471.51	Production Operations	502.00
FI000489	1.30%	471.51	Production Operations	505.00
FI000490	1.30%	471.51	Production Maintenance	512.00
FI000491	1.30%	471.51	Production Maintenance	511.00
FI000492	0.39%	141.45	Transmission Operations	563.00
FI000493	0.39%	141.45	Transmission Operations	562.00
FI000494	0.39%	141.45	Transmission Maintenance	571.00
FI000495	0.39%	141.45	Transmission Maintenance	570.00
FI000496	0.90%	326.43	Distribution Operations	583.00
FI000497	0.90%	326.43	Distribution Operations	582.00
FI000498	0.90%	326.43	Distribution Maintenance	593.00
FI000499	0.90%	326.43	Distribution Maintenance	592.00
		0.00		

186200 HAWAII ELECTRIC LIGHT COMPANY

For the month of 12/2005

Project	Work Order	Account	Billable Amount	Corp Admin Rate	Total Billable
	AD000320	P1V752HELBENPAVP1ZZ150	205.22	.00	205.22
	AD000320	P1V752HELBENPAVP1ZZ155	65.22-	.00	65.22-
	AD000320	P1V752HELBENPAVP1ZZ406	4.00	.00	4.00
	AD000320	P1V752HELBENPAVP1ZZ421	7.70	.00	7.70
	AD000320	P1V752HELBENPAVP1ZZ422	16.70	.00	16.70
	AD000320	P1V752HELBENPAVP1ZZ423	9.37	.00	9.37
		Project/Work Order Total	177.77	.00	177.77
		MIMS Processing Fees - HELCO			
	HR000129	PEZ895HELBENPAVP2ZZ451	36,270.36	.00	36,270.36
		Project/Work Order Total	36,270.36	.00	36,270.36
		KGRG, HELCO meetings			
	AD001025	P7V745HELBENPAVP7ZZ150	205.22	.00	205.22
	AD001025	P7V745HELBENPAVP7ZZ155	59.95-	.00	59.95-
	AD001025	P7V745HELBENPAVP7ZZ406	4.00	.00	4.00
	AD001025	P7V745HELBENPAVP7ZZ421	7.70	.00	7.70
	AD001025	P7V745HELBENPAVP7ZZ422	16.70	.00	16.70
	AD001025	P7V745HELBENPAVP7ZZ423	9.72	.00	9.72
		Project/Work Order Total	183.39	.00	183.39
		H18747 001 HELCO AP PROCESSING			
	FI000006	PAD843HELBENPAZZZZZ150	5,328.21	.00	5,328.21
	FI000006	PAD843HELBENPAZZZZZ155	570.36-	.00	570.36-
	FI000006	PAD843HELBENPAZZZZZ201	58.34	.00	58.34
	FI000006	PAD843HELBENPAZZZZZ406	438.50	.00	438.50
	FI000006	PAD843HELBENPAZZZZZ421	844.43	.00	844.43
	FI000006	PAD843HELBENPAZZZZZ422	1,831.05	.00	1,831.05
	FI000006	PAD843HELBENPAZZZZZ423	318.45	.00	318.45
	FI000006	PAD843HELBENPAZZZZZ501	727.03	.00	727.03
	FI000006	PVP843HELBENPAZZZZZ640	208.06	.00	208.06
		Project/Work Order Total	9,183.71	.00	9,183.71
		H24279 001-HELCO Maint FAsset Records			
	FI000020	PAA817HELBENPAZZZZZ150	659.44	.00	659.44
	FI000020	PAA817HELBENPAZZZZZ155	64.62-	.00	64.62-
	FI000020	PAA817HELBENPAZZZZZ406	43.00	.00	43.00
	FI000020	PAA817HELBENPAZZZZZ421	82.81	.00	82.81

Hawaii Electric Light Company, Inc.
MIMS Reallocation
Feb, 2006

(RA=HAA)
(EE=501)

Coding:	%	Feb, 2006	Charged To	Acct No
24200 000	100.00%	(25,230.05)		
FI000476	15.43%	3,892.99	A&G Operations	921.00
FI000478	3.86%	973.88	A&G Operations	921.00
FI000479	7.72%	1,947.76	A&G Operations	921.00
FI000480	3.86%	973.88	A&G Operations	921.00
FI000481	13.65%	3,443.90	A&G Operations	921.00
FI000482	13.65%	3,443.90	A&G Operations	921.00
FI000642	10.54%	2,659.25	A&G Operations	921.00
FI000644	10.54%	2,659.25	Distribution Operations	583.00
FI000485	1.04%	262.39	Production Maintenance	514.00
FI000486	2.08%	524.79	Transmission Operations	566.00
FI000487	7.27%	1,834.22	Distribution Maintenance	598.00
FI000488	1.30%	327.99	Production Operations	502.00
FI000489	1.30%	327.99	Production Operations	505.00
FI000490	1.30%	327.99	Production Maintenance	512.00
FI000491	1.30%	327.99	Production Maintenance	511.00
FI000492	0.39%	98.40	Transmission Operations	563.00
FI000493	0.39%	98.40	Transmission Operations	562.00
FI000494	0.39%	98.40	Transmission Maintenance	571.00
FI000495	0.39%	98.40	Transmission Maintenance	570.00
FI000496	0.90%	227.07	Distribution Operations	583.00
FI000497	0.90%	227.07	Distribution Operations	582.00
FI000498	0.90%	227.07	Distribution Maintenance	593.00
FI000499	0.90%	227.07	Distribution Maintenance	592.00
		0.00		

186200 HAWAII ELECTRIC LIGHT COMPANY

For the month of 01/2006

Project	Work Order	Account	Billable Amount	Corp Admin Rate	Total Billable
	AD001314	PQE711HELBENPASVP9Z421	65.12	.00	65.12
	AD001314	PQE711HELBENPASVP9Z422	185.28	.00	185.28
	AD001314	PQE711HELBENPASVP9Z423	50.22	.00	50.22
	AD001314	P5V711HELBENPASVP9Z522	186.00	.00	186.00
		Project/Work Order Total	1,158.54	.00	1,158.54
		H24273 - VP Labor			
	AD000320	P1V752HELBENPAVP1ZZ150	221.06	.00	221.06
	AD000320	P1V752HELBENPAVP1ZZ155	81.06-	.00	81.06-
	AD000320	P1V752HELBENPAVP1ZZ406	4.96	.00	4.96
	AD000320	P1V752HELBENPAVP1ZZ421	8.14	.00	8.14
	AD000320	P1V752HELBENPAVP1ZZ422	23.16	.00	23.16
	AD000320	P1V752HELBENPAVP1ZZ423	11.13	.00	11.13
		Project/Work Order Total	187.39	.00	187.39
		MIMS Processing Fees - HELCO			
	HR000129	PEZ895HELBENPAVP2ZZ451	25,230.05	.00	25,230.05
		Project/Work Order Total	25,230.05	.00	25,230.05
		H24373 001-KEAHOLE J. ERICKSON			
	AD000470	P5V211C04BENPAVP5ZZ150	1,271.10	.00	1,271.10
	AD000470	P5V211C04BENPAVP5ZZ155	243.97-	.00	243.97-
	AD000470	P5V211C04BENPAVP5ZZ406	28.52	.00	28.52
	AD000470	P5V211C04BENPAVP5ZZ421	46.81	.00	46.81
	AD000470	P5V211C04BENPAVP5ZZ422	133.17	.00	133.17
	AD000470	P5V211C04BENPAVP5ZZ423	81.66	.00	81.66
		Project/Work Order Total	1,317.29	.00	1,317.29
		KGRG, HELCO meetings			
	AD001025	P7V745HELBENPAVP7ZZ150	276.33	.00	276.33
	AD001025	P7V745HELBENPAVP7ZZ155	90.01-	.00	90.01-
	AD001025	P7V745HELBENPAVP7ZZ406	6.20	.00	6.20
	AD001025	P7V745HELBENPAVP7ZZ421	10.18	.00	10.18
	AD001025	P7V745HELBENPAVP7ZZ422	28.95	.00	28.95
	AD001025	P7V745HELBENPAVP7ZZ423	14.81	.00	14.81
		Project/Work Order Total	246.46	.00	246.46
		H24274 001 - Mgmt.Svcs.Fees-Ctrlr's Ofc.			

Hawaii Electric Light Company, Inc.
MIMS Reallocation
Mar, 2006

(RA=HAA)
(EE=501)

Coding:	%	Mar, 2006	Charged To	Acct No
24200 000	100.00%	(12,204.95)		
FI000476	15.43%	1,883.26	A&G Operations	921.00
FI000478	3.86%	471.11	A&G Operations	921.00
FI000479	7.72%	942.22	A&G Operations	921.00
FI000480	3.86%	471.11	A&G Operations	921.00
FI000481	13.65%	1,665.98	A&G Operations	921.00
FI000482	13.65%	1,665.98	A&G Operations	921.00
FI000642	10.54%	1,286.40	A&G Operations	921.00
FI000644	10.54%	1,286.40	Distribution Operations	583.00
FI000485	1.04%	126.93	Production Maintenance	514.00
FI000486	2.08%	253.86	Transmission Operations	566.00
FI000487	7.27%	887.30	Distribution Maintenance	598.00
FI000488	1.30%	158.66	Production Operations	502.00
FI000489	1.30%	158.66	Production Operations	505.00
FI000490	1.30%	158.66	Production Maintenance	512.00
FI000491	1.30%	158.66	Production Maintenance	511.00
FI000492	0.39%	47.60	Transmission Operations	563.00
FI000493	0.39%	47.60	Transmission Operations	562.00
FI000494	0.39%	47.60	Transmission Maintenance	571.00
FI000495	0.39%	47.60	Transmission Maintenance	570.00
FI000496	0.90%	109.84	Distribution Operations	583.00
FI000497	0.90%	109.84	Distribution Operations	582.00
FI000498	0.90%	109.84	Distribution Maintenance	593.00
FI000499	0.90%	109.84	Distribution Maintenance	592.00
		(0.00)		

Req.By: YAMASHITA,HARVEY Y
Run on: 03/13/06 at: 11:21:00

HAWAIIAN ELECTRIC COMPANY, INC.

Intercompany Billing Report (Project / Work Order) - XREF

Page: 6
Report: SUR9XCA
Version: 5.2.37.001A

186200 HAWAII ELECTRIC LIGHT COMPANY

For the month of 02/2006

Project	Work Order	Account	Billable Amount	Corp Admin Rate	Total Billable
		Project/Work Order Total	1,602.07	.00	1,602.07
		MIMS Processing Fees - HELCO			
	HR000129	PEZ895HELBENPAVP2ZZ451	12,204.95	.00	12,204.95
		Project/Work Order Total	12,204.95	.00	12,204.95
		H24373 001-KEAHOLE J. ERICKSON			
	AD000470	P5V211C04BENPAVP5ZZ522	186.20	.00	186.20
		Project/Work Order Total	186.20	.00	186.20
		H35907 001 - Mgmt.Svcs.Fees-Ctrlr's Ofc.			
	AD000237	PAA815HELBENPAZZZZZ150	123.04	.00	123.04
	AD000237	PAA815HELBENPAZZZZZ155	11.43-	.00	11.43-
	AD000237	PAA815HELBENPAZZZZZ406	4.90	.00	4.90
	AD000237	PAA815HELBENPAZZZZZ421	8.58	.00	8.58
	AD000237	PAA815HELBENPAZZZZZ422	21.56	.00	21.56
	AD000237	PAA815HELBENPAZZZZZ423	8.87	.00	8.87
		Project/Work Order Total	155.52	.00	155.52
		H35918 001 HELCO AP PROCESSING			
	FI000006	PAD843HELBENPAZZZZZ150	5,440.01	.00	5,440.01
	FI000006	PAD843HELBENPAZZZZZ155	757.49-	.00	757.49-
	FI000006	PAD843HELBENPAZZZZZ406	548.03	.00	548.03
	FI000006	PAD843HELBENPAZZZZZ421	959.27	.00	959.27
	FI000006	PAD843HELBENPAZZZZZ422	2,409.33	.00	2,409.33
	FI000006	PAD843HELBENPAZZZZZ423	372.53	.00	372.53
	FI000006	PAD843HELBENPAZZZZZ501	292.50	.00	292.50
	FI000006	PVP843HELBENPAZZZZZ640	209.85	.00	209.85
		Project/Work Order Total	9,474.03	.00	9,474.03
		H24267 001 Maintain HELCO GL			
	FI000014	PAC818HELBENPAZZZZZ150	15.92	.00	15.92
	FI000014	PAC818HELBENPAZZZZZ155	2.47-	.00	2.47-
	FI000014	PAC818HELBENPAZZZZZ406	1.23	.00	1.23
	FI000014	PAC818HELBENPAZZZZZ421	2.15	.00	2.15
	FI000014	PAC818HELBENPAZZZZZ422	5.39	.00	5.39
	FI000014	PAC818HELBENPAZZZZZ423	1.07	.00	1.07

Hawaii Electric Light Company, Inc.
MIMS Reallocation
Apr, 2006

(RA=HAA)
(EE=501)

Coding:	%	Apr, 2006	Charged To	Acct No
24200 000	100.00%	(19,403.22)		
FI000476	15.43%	2,993.94	A&G Operations	921.00
FI000478	3.86%	748.96	A&G Operations	921.00
FI000479	7.72%	1,497.93	A&G Operations	921.00
FI000480	3.86%	748.96	A&G Operations	921.00
FI000481	13.65%	2,648.54	A&G Operations	921.00
FI000482	13.65%	2,648.54	A&G Operations	921.00
FI000642	10.54%	2,045.10	A&G Operations	921.00
FI000644	10.54%	2,045.10	Distribution Operations	583.00
FI000485	1.04%	201.79	Production Maintenance	514.00
FI000486	2.08%	403.59	Transmission Operations	566.00
FI000487	7.27%	1,410.61	Distribution Maintenance	598.00
FI000488	1.30%	252.24	Production Operations	502.00
FI000489	1.30%	252.24	Production Operations	505.00
FI000490	1.30%	252.24	Production Maintenance	512.00
FI000491	1.30%	252.24	Production Maintenance	511.00
FI000492	0.39%	75.67	Transmission Operations	563.00
FI000493	0.39%	75.67	Transmission Operations	562.00
FI000494	0.39%	75.67	Transmission Maintenance	571.00
FI000495	0.39%	75.67	Transmission Maintenance	570.00
FI000496	0.90%	174.63	Distribution Operations	583.00
FI000497	0.90%	174.63	Distribution Operations	582.00
FI000498	0.90%	174.63	Distribution Maintenance	593.00
FI000499	0.90%	174.63	Distribution Maintenance	592.00
		(0.00)		

186200 HAWAII ELECTRIC LIGHT COMPANY

For the month of 03/2006

Project	Work Order	Account	Billable Amount	Corp Admin Rate	Total Billable
		Project/Work Order Total	240.73	.00	240.73
		Renewables development - HELCO			
	AD001517	P9S700HELBENPASVP7Z155	.31	.00	.31
	AD001517	P9S700HELBENPASVP7Z423	.02	.00	.02
		Project/Work Order Total	.33	.00	.33
		H31515 001 University of Hawaii - Hilo			
	AD001570	PNG211HELBINPASVP7Z150	31.83	.00	31.83
	AD001570	PNG211HELBINPASVP7Z155	7.69	.00	7.69
	AD001570	PNG211HELBINPASVP7Z406	2.45	.00	2.45
	AD001570	PNG211HELBINPASVP7Z421	4.29	.00	4.29
	AD001570	PNG211HELBINPASVP7Z422	10.78	.00	10.78
	AD001570	PNG211HELBINPASVP7Z423	3.14	.00	3.14
	AD001570	PNG211HELBINPASVP7Z522	14.00	.00	14.00
		Project/Work Order Total	74.18	.00	74.18
		H35458/1 -- IRP-CR-HELCO BASE			
	AD001314	POE711HELBENPASVP9Z150	1,216.51	.00	1,216.51
	AD001314	POE711HELBENPASVP9Z155	72.59-	.00	72.59-
	AD001314	POE711HELBENPASVP9Z406	73.51	.00	73.51
	AD001314	POE711HELBENPASVP9Z421	128.71	.00	128.71
	AD001314	POE711HELBENPASVP9Z422	323.40	.00	323.40
	AD001314	POE711HELBENPASVP9Z423	90.96	.00	90.96
		Project/Work Order Total	1,760.50	.00	1,760.50
		H24273 - VP Labor			
	AD000320	P1V752HELBENPAVP1ZZ150	221.06	.00	221.06
	AD000320	P1V752HELBENPAVP1ZZ155	81.06-	.00	81.06-
	AD000320	P1V752HELBENPAVP1ZZ406	4.90	.00	4.90
	AD000320	P1V752HELBENPAVP1ZZ421	8.58	.00	8.58
	AD000320	P1V752HELBENPAVP1ZZ422	21.56	.00	21.56
	AD000320	P1V752HELBENPAVP1ZZ423	11.13	.00	11.13
		Project/Work Order Total	186.17	.00	186.17
		MIMS Processing Fees - HELCO			
	HR000129	PEZ895HELBENPAVP2ZZ451	19,403.22	.00	19,403.22

Hawaii Electric Light Company, Inc.
MIMS Reallocation
May, 2006

(RA=HAA)
(EE=501)

Coding:	%	May, 2006	Charged To	Acct No
24200 000	100.00%	(26,315.51)		
FI000476	15.43%	4,060.49	A&G Operations	921.00
FI000478	3.86%	1,015.78	A&G Operations	921.00
FI000479	7.72%	2,031.56	A&G Operations	921.00
FI000480	3.86%	1,015.78	A&G Operations	921.00
FI000481	13.65%	3,592.07	A&G Operations	921.00
FI000482	13.65%	3,592.07	A&G Operations	921.00
FI000642	10.54%	2,773.65	A&G Operations	921.00
FI000644	10.54%	2,773.65	Distribution Operations	583.00
FI000485	1.04%	273.68	Production Maintenance	514.00
FI000486	2.08%	547.36	Transmission Operations	566.00
FI000487	7.27%	1,913.14	Distribution Maintenance	598.00
FI000488	1.30%	342.10	Production Operations	502.00
FI000489	1.30%	342.10	Production Operations	505.00
FI000490	1.30%	342.10	Production Maintenance	512.00
FI000491	1.30%	342.10	Production Maintenance	511.00
FI000492	0.39%	102.63	Transmission Operations	563.00
FI000493	0.39%	102.63	Transmission Operations	562.00
FI000494	0.39%	102.63	Transmission Maintenance	571.00
FI000495	0.39%	102.63	Transmission Maintenance	570.00
FI000496	0.90%	236.84	Distribution Operations	583.00
FI000497	0.90%	236.84	Distribution Operations	582.00
FI000498	0.90%	236.84	Distribution Maintenance	593.00
FI000499	0.90%	236.84	Distribution Maintenance	592.00
		0.00		

186200 HAWAII ELECTRIC LIGHT COMPANY

For the month of 04/2006

Project	Work Order	Account	Billable Amount	Corp Admin Rate	Total Billable
		Project/Work Order Total	194.85	.00	194.85
		H29771 001 Bill to HELCO-Plan/Appr Proj			
	AD001358	PNG210HELBENPASVP7Z150	92.02	.00	92.02
	AD001358	PNG210HELBENPASVP7Z155	20.33	.00	20.33
	AD001358	PNG210HELBENPASVP7Z406	6.13	.00	6.13
	AD001358	PNG210HELBENPASVP7Z421	10.73	.00	10.73
	AD001358	PNG210HELBENPASVP7Z422	26.95	.00	26.95
	AD001358	PNG210HELBENPASVP7Z423	8.93	.00	8.93
		Project/Work Order Total	165.09	.00	165.09
		H29474 001 Bill to HELCO-N HI Cmmty Hosp			
	AD001509	PNG211HELBINPASVP7Z155	10.54	.00	10.54
	AD001509	PNG211HELBINPASVP7Z423	.84	.00	.84
		Project/Work Order Total	11.38	.00	11.38
		H35458/1 -- IRP-CR-HELCO BASE			
	AD001314	PQE711HELBENPASVP9Z150	425.78	.00	425.78
	AD001314	PQE711HELBENPASVP9Z155	5.32	.00	5.32
	AD001314	PQE711HELBENPASVP9Z406	25.73	.00	25.73
	AD001314	PQE711HELBENPASVP9Z421	45.05	.00	45.05
	AD001314	PQE711HELBENPASVP9Z422	113.19	.00	113.19
	AD001314	PQE711HELBENPASVP9Z423	34.26	.00	34.26
	AD001314	P9V711HELBENPASVP9Z522	183.20	.00	183.20
		Project/Work Order Total	832.53	.00	832.53
		H35906 - HECO VP Media Relations Support			
	AD000320	P1V752HELBENPAVP1ZZ150	1,105.30	.00	1,105.30
	AD000320	P1V752HELBENPAVP1ZZ155	374.18-	.00	374.18-
	AD000320	P1V752HELBENPAVP1ZZ406	24.50	.00	24.50
	AD000320	P1V752HELBENPAVP1ZZ421	42.90	.00	42.90
	AD000320	P1V752HELBENPAVP1ZZ422	107.80	.00	107.80
	AD000320	P1V752HELBENPAVP1ZZ423	58.11	.00	58.11
		Project/Work Order Total	964.43	.00	964.43
		MIMS Processing Fees - HELCO			
	HR000129	PEZ895HELBENPAVP2ZZ451	26,315.51	.00	26,315.51

Hawaii Electric Light Company, Inc.
MIMS Reallocation
June, 2006

(RA=HAA)
(EE=501)

Coding:	%	June, 2006	Charged To	Acct No
24200 000	100.00%	(16,115.14)		
FI000476	15.43%	2,486.53	A&G Operations	921.00
FI000478	3.86%	622.04	A&G Operations	921.00
FI000479	7.72%	1,244.09	A&G Operations	921.00
FI000480	3.86%	622.04	A&G Operations	921.00
FI000481	13.65%	2,199.72	A&G Operations	921.00
FI000482	13.65%	2,199.72	A&G Operations	921.00
FI000642	10.54%	1,698.54	A&G Operations	921.00
FI000644	10.54%	1,698.54	Distribution Operations	583.00
FI000485	1.04%	167.60	Production Maintenance	514.00
FI000486	2.08%	335.19	Transmission Operations	566.00
FI000487	7.27%	1,171.57	Distribution Maintenance	598.00
FI000488	1.30%	209.50	Production Operations	502.00
FI000489	1.30%	209.50	Production Operations	505.00
FI000490	1.30%	209.50	Production Maintenance	512.00
FI000491	1.30%	209.50	Production Maintenance	511.00
FI000492	0.39%	62.85	Transmission Operations	563.00
FI000493	0.39%	62.85	Transmission Operations	562.00
FI000494	0.39%	62.85	Transmission Maintenance	571.00
FI000495	0.39%	62.85	Transmission Maintenance	570.00
FI000496	0.90%	145.04	Distribution Operations	583.00
FI000497	0.90%	145.04	Distribution Operations	582.00
FI000498	0.90%	145.04	Distribution Maintenance	593.00
FI000499	0.90%	145.04	Distribution Maintenance	592.00
		0.00		

186200 HAWAII ELECTRIC LIGHT COMPANY

For the month of 05/2006

Project	Work Order	Account	Billable Amount	Corp Admin Rate	Total Billable
	AD001314	PQE711HELBENPASVP9Z422	242.55	.00	242.55
	AD001314	PQE711HELBENPASVP9Z423	69.87	.00	69.87
	AD001314	PQE711HELBENPASVP9Z501	10.00	.00	10.00
		Project/Work Order Total	1,328.91	.00	1,328.91
		H35906 - HECO VP Media Relations Support			
	AD000320	P1V752HELBENPAVP1ZZ150	221.06	.00	221.06
	AD000320	P1V752HELBENPAVP1ZZ155	50.33-	.00	50.33-
	AD000320	P1V752HELBENPAVP1ZZ406	4.90	.00	4.90
	AD000320	P1V752HELBENPAVP1ZZ421	9.30	.00	9.30
	AD000320	P1V752HELBENPAVP1ZZ422	21.56	.00	21.56
	AD000320	P1V752HELBENPAVP1ZZ423	14.09	.00	14.09
		Project/Work Order Total	220.58	.00	220.58
		MIMS Processing Fees - HELCO			
	HR000129	PEZ895HELBENPAVP2ZZ451	16,115.14	.00	16,115.14
		Project/Work Order Total	16,115.14	.00	16,115.14
		H24373 001-KEAHOLE J. ERICKSON			
	AD000470	P5V211C04BENPAVP5ZZ150	110.53	.00	110.53
	AD000470	P5V211C04BENPAVP5ZZ155	20.33-	.00	20.33-
	AD000470	P5V211C04BENPAVP5ZZ406	2.45	.00	2.45
	AD000470	P5V211C04BENPAVP5ZZ421	4.65	.00	4.65
	AD000470	P5V211C04BENPAVP5ZZ422	10.78	.00	10.78
	AD000470	P5V211C04BENPAVP5ZZ423	7.44	.00	7.44
		Project/Work Order Total	115.52	.00	115.52
		H35907 001 - Mgmt.Svcs.Fees-Ctrlr's Ofc.			
	AD000237	PAA815HELBENPAZZZZZ150	1,661.04	.00	1,661.04
	AD000237	PAA815HELBENPAZZZZZ155	263.44-	.00	263.44-
	AD000237	PAA815HELBENPAZZZZZ406	66.15	.00	66.15
	AD000237	PAA815HELBENPAZZZZZ421	125.55	.00	125.55
	AD000237	PAA815HELBENPAZZZZZ422	291.06	.00	291.06
	AD000237	PAA815HELBENPAZZZZZ423	115.31	.00	115.31
		Project/Work Order Total	1,995.67	.00	1,995.67
		H35918 001 HELCO AP PROCESSING			
	FI000006	PAD843HELBENPAZZZZZ150	6,032.62	.00	6,032.62

Hawaii Electric Light Company, Inc.
MIMS Reallocation
July, 2006

(RA=HAA)
(EE=501)

Coding:	%	July, 2006	Charged To	Acct No
24200 000	100.00%	(35,077.88)		
FI000476	15.43%	5,412.54	A&G Operations	921.00
FI000478	3.86%	1,354.01	A&G Operations	921.00
FI000479	7.72%	2,708.01	A&G Operations	921.00
FI000480	3.86%	1,354.01	A&G Operations	921.00
FI000481	13.65%	4,788.13	A&G Operations	921.00
FI000482	13.65%	4,788.13	A&G Operations	921.00
FI000642	10.54%	3,697.21	A&G Operations	921.00
FI000644	10.54%	3,697.21	Distribution Operations	583.00
FI000485	1.04%	364.81	Production Maintenance	514.00
FI000486	2.08%	729.62	Transmission Operations	566.00
FI000487	7.27%	2,550.16	Distribution Maintenance	598.00
FI000488	1.30%	456.01	Production Operations	502.00
FI000489	1.30%	456.01	Production Operations	505.00
FI000490	1.30%	456.01	Production Maintenance	512.00
FI000491	1.30%	456.01	Production Maintenance	511.00
FI000492	0.39%	136.80	Transmission Operations	563.00
FI000493	0.39%	136.80	Transmission Operations	562.00
FI000494	0.39%	136.80	Transmission Maintenance	571.00
FI000495	0.39%	136.80	Transmission Maintenance	570.00
FI000496	0.90%	315.70	Distribution Operations	583.00
FI000497	0.90%	315.70	Distribution Operations	582.00
FI000498	0.90%	315.70	Distribution Maintenance	593.00
FI000499	0.90%	315.70	Distribution Maintenance	592.00
		0.00		

186200 HAWAII ELECTRIC LIGHT COMPANY

For the month of 06/2006

Project	Work Order	Account	Billable Amount	Corp Admin Rate	Total Billable
	AD001274	PNR730HELBENPASVP7Z423	6.00	.00	6.00
	AD001274	P9S730HELBENPASVP7Z150	55.26	.00	55.26
	AD001274	P9S730HELBENPASVP7Z155	21.32	.00	21.32
	AD001274	P9S730HELBENPASVP7Z406	1.22	.00	1.22
	AD001274	P9S730HELBENPASVP7Z421	2.32	.00	2.32
	AD001274	P9S730HELBENPASVP7Z422	5.40	.00	5.40
	AD001274	P9S730HELBENPASVP7Z423	6.32	.00	6.32
		Project/Work Order Total	206.37	.00	206.37
		H29771 001 Bill to HELCO-Plan/Appr Proj			
	AD001358	PNG210HELBENPASVP7Z150	613.31	.00	613.31
	AD001358	PNG210HELBENPASVP7Z155	8.89	.00	8.89
	AD001358	PNG210HELBENPASVP7Z406	37.98	.00	37.98
	AD001358	PNG210HELBENPASVP7Z421	72.08	.00	72.08
	AD001358	PNG210HELBENPASVP7Z422	167.09	.00	167.09
	AD001358	PNG210HELBENPASVP7Z423	51.34	.00	51.34
		Project/Work Order Total	950.69	.00	950.69
		H29474 001 Bill to HELCO-N HI Cmmty Hosp			
	AD001509	PNG211HELBINPASVP7Z501	40.94	.00	40.94
		Project/Work Order Total	40.94	.00	40.94
		H35458/1 -- IRP-CR-HELCO BASE			
	AD001314	POE711HELBENPASVP9Z150	683.13	.00	683.13
	AD001314	POE711HELBENPASVP9Z155	10.26	.00	10.26
	AD001314	POE711HELBENPASVP9Z406	41.65	.00	41.65
	AD001314	POE711HELBENPASVP9Z421	79.05	.00	79.05
	AD001314	POE711HELBENPASVP9Z422	183.26	.00	183.26
	AD001314	POE711HELBENPASVP9Z423	57.24	.00	57.24
		Project/Work Order Total	1,054.59	.00	1,054.59
		MIMS Processing Fees - HELCO			
	HR000129	PEZ895HELBENPAVP2ZZ451	35,077.88	.00	35,077.88
		Project/Work Order Total	35,077.88	.00	35,077.88
		H24373 001-KEAHOLE J. ERICKSON			
	AD000470	P5V211C04BENPAVP5ZZ150	221.06	.00	221.06
	AD000470	P5V211C04BENPAVP5ZZ155	36.73-	.00	36.73-

Hawaii Electric Light Company, Inc.
MIMS Reallocation
Aug, 2006

(RA=HAA)
(EE=501)

Coding:	%	Aug, 2006	Charged To	Acct No
24200 000	100.00%	(39,682.16)		
FI000476	15.43%	6,122.97	A&G Operations	921.00
FI000478	3.86%	1,531.73	A&G Operations	921.00
FI000479	7.72%	3,063.46	A&G Operations	921.00
FI000480	3.86%	1,531.73	A&G Operations	921.00
FI000481	13.65%	5,416.61	A&G Operations	921.00
FI000482	13.65%	5,416.61	A&G Operations	921.00
FI000642	10.54%	4,182.50	A&G Operations	921.00
FI000644	10.54%	4,182.50	Distribution Operations	583.00
FI000485	1.04%	412.69	Production Maintenance	514.00
FI000486	2.08%	825.39	Transmission Operations	566.00
FI000487	7.27%	2,884.89	Distribution Maintenance	598.00
FI000488	1.30%	515.87	Production Operations	502.00
FI000489	1.30%	515.87	Production Operations	505.00
FI000490	1.30%	515.87	Production Maintenance	512.00
FI000491	1.30%	515.87	Production Maintenance	511.00
FI000492	0.39%	154.76	Transmission Operations	563.00
FI000493	0.39%	154.76	Transmission Operations	562.00
FI000494	0.39%	154.76	Transmission Maintenance	571.00
FI000495	0.39%	154.76	Transmission Maintenance	570.00
FI000496	0.90%	357.14	Distribution Operations	583.00
FI000497	0.90%	357.14	Distribution Operations	582.00
FI000498	0.90%	357.14	Distribution Maintenance	593.00
FI000499	0.90%	357.14	Distribution Maintenance	592.00
		(0.00)		

186200 HAWAII ELECTRIC LIGHT COMPANY

For the month of 07/2006

Project	Work Order	Account	Billable Amount	Corp Admin Rate	Total Billable
	AD001274	P9S730HELBENPASVP7Z422	5.39	.00	5.39
	AD001274	P9S730HELBENPASVP7Z423	5.88	.00	5.88
		Project/Work Order Total	137.70	.00	137.70
		H29771 001 Bill to HELCO-Plan/Appr Proj			
	AD001358	PNG210HELBENPASVP7Z150	314.83	.00	314.83
	AD001358	PNG210HELBENPASVP7Z155	70.50	.00	70.50
	AD001358	PNG210HELBENPASVP7Z406	23.28	.00	23.28
	AD001358	PNG210HELBENPASVP7Z421	44.18	.00	44.18
	AD001358	PNG210HELBENPASVP7Z422	102.41	.00	102.41
	AD001358	PNG210HELBENPASVP7Z423	31.81	.00	31.81
		Project/Work Order Total	587.01	.00	587.01
		H31515 001 University of Hawaii - Hilo			
	AD001570	PNG211HELBINPASVP7Z506	2,169.75	.00	2,169.75
		Project/Work Order Total	2,169.75	.00	2,169.75
		H35458/1 -- IRP-CR-HELCO BASE			
	AD001314	POE711HELBENPASVP9Z150	1,827.60	.00	1,827.60
	AD001314	POE711HELBENPASVP9Z155	74.42-	.00	74.42-
	AD001314	POE711HELBENPASVP9Z406	111.49	.00	111.49
	AD001314	POE711HELBENPASVP9Z421	211.59	.00	211.59
	AD001314	POE711HELBENPASVP9Z422	490.49	.00	490.49
	AD001314	POE711HELBENPASVP9Z423	144.63	.00	144.63
	AD001314	P9V711HELBENPASVP9Z522	144.60	.00	144.60
		Project/Work Order Total	2,855.98	.00	2,855.98
		H35906 - HECO VP Media Relations Support			
	AD000320	P1V752HELBENPAVP1ZZ150	165.80	.00	165.80
	AD000320	P1V752HELBENPAVP1ZZ155	83.60-	.00	83.60-
	AD000320	P1V752HELBENPAVP1ZZ406	3.68	.00	3.68
	AD000320	P1V752HELBENPAVP1ZZ421	6.98	.00	6.98
	AD000320	P1V752HELBENPAVP1ZZ422	16.17	.00	16.17
	AD000320	P1V752HELBENPAVP1ZZ423	6.78	.00	6.78
		Project/Work Order Total	115.81	.00	115.81
		MIMS Processing Fees - HELCO			
	HR000129	PEZ895HELBENPAVP2ZZ451	39,682.16	.00	39,682.16

Hawaii Electric Light Company, Inc.
MIMS Reallocation
Sep, 2006

(RA=HAA)
(EE=501)

Coding:	%	Sep, 2006	Charged To	Acct No
24200 000	100.00%	(19,025.32)		
FI000476	15.43%	2,935.58	A&G Operations	921.00
FI000478	3.86%	734.38	A&G Operations	921.00
FI000479	7.72%	1,468.75	A&G Operations	921.00
FI000480	3.86%	734.38	A&G Operations	921.00
FI000481	13.65%	2,596.96	A&G Operations	921.00
FI000482	13.65%	2,596.96	A&G Operations	921.00
FI000642	10.54%	2,005.27	A&G Operations	921.00
FI000644	10.54%	2,005.27	Distribution Operations	583.00
FI000485	1.04%	197.86	Production Maintenance	514.00
FI000486	2.08%	395.73	Transmission Operations	566.00
FI000487	7.27%	1,383.14	Distribution Maintenance	598.00
FI000488	1.30%	247.33	Production Operations	502.00
FI000489	1.30%	247.33	Production Operations	505.00
FI000490	1.30%	247.33	Production Maintenance	512.00
FI000491	1.30%	247.33	Production Maintenance	511.00
FI000492	0.39%	74.20	Transmission Operations	563.00
FI000493	0.39%	74.20	Transmission Operations	562.00
FI000494	0.39%	74.20	Transmission Maintenance	571.00
FI000495	0.39%	74.20	Transmission Maintenance	570.00
FI000496	0.90%	171.23	Distribution Operations	583.00
FI000497	0.90%	171.23	Distribution Operations	582.00
FI000498	0.90%	171.23	Distribution Maintenance	593.00
FI000499	0.90%	171.23	Distribution Maintenance	592.00
		(0.00)		

186200 HAWAII ELECTRIC LIGHT COMPANY

For the month of 08/2006

Project	Work Order	Account	Billable Amount	Corp Admin Rate	Total Billable
	HR000129	PEZ895HELBENPAVP2ZZ451	19,025.32	.00	19,025.32
		Project/Work Order Total	19,025.32	.00	19,025.32
		H24373 001-KEAHOLE J. ERICKSON			
	AD000470	P5V211C04BENPAVP5ZZ150	221.06	.00	221.06
	AD000470	P5V211C04BENPAVP5ZZ155	37.04-	.00	37.04-
	AD000470	P5V211C04BENPAVP5ZZ406	4.90	.00	4.90
	AD000470	P5V211C04BENPAVP5ZZ421	9.30	.00	9.30
	AD000470	P5V211C04BENPAVP5ZZ422	22.36	.00	22.36
	AD000470	P5V211C04BENPAVP5ZZ423	15.58	.00	15.58
		Project/Work Order Total	236.16	.00	236.16
		KGRG, HELCO meetings			
	AD001025	P7V745HELBENPAVP7ZZ150	221.06	.00	221.06
	AD001025	P7V745HELBENPAVP7ZZ155	55.92-	.00	55.92-
	AD001025	P7V745HELBENPAVP7ZZ406	4.90	.00	4.90
	AD001025	P7V745HELBENPAVP7ZZ421	9.30	.00	9.30
	AD001025	P7V745HELBENPAVP7ZZ422	22.36	.00	22.36
	AD001025	P7V745HELBENPAVP7ZZ423	13.98	.00	13.98
		Project/Work Order Total	215.68	.00	215.68
		H35907 001 - Mgmt.Svcs.Fees-Ctrlr's Ofc.			
	AD000237	PAA815HELBENPAZZZZZ150	1,015.08	.00	1,015.08
	AD000237	PAA815HELBENPAZZZZZ155	106.79-	.00	106.79-
	AD000237	PAA815HELBENPAZZZZZ406	40.43	.00	40.43
	AD000237	PAA815HELBENPAZZZZZ421	76.73	.00	76.73
	AD000237	PAA815HELBENPAZZZZZ422	184.47	.00	184.47
	AD000237	PAA815HELBENPAZZZZZ423	76.93	.00	76.93
		Project/Work Order Total	1,286.85	.00	1,286.85
		H35918 001 HELCO AP PROCESSING			
	FI000006	PAD843HELBENPAZZZZZ150	5,999.80	.00	5,999.80
	FI000006	PAD843HELBENPAZZZZZ155	644.52-	.00	644.52-
	FI000006	PAD843HELBENPAZZZZZ201	1,325.31	.00	1,325.31
	FI000006	PAD843HELBENPAZZZZZ406	608.11	.00	608.11
	FI000006	PAD843HELBENPAZZZZZ421	1,153.71	.00	1,153.71
	FI000006	PAD843HELBENPAZZZZZ422	2,772.64	.00	2,772.64
	FI000006	PAD843HELBENPAZZZZZ423	453.17	.00	453.17

Hawaii Electric Light Company, Inc.
MIMS Reallocation
Oct, 2006

(RA=HAA)
(EE=501)

Coding:	%	Oct, 2006	Charged To	Acct No
24200 000	100.00%	(14,063.39)		
FI000476	15.43%	2,169.99	A&G Operations	921.00
FI000478	3.86%	542.85	A&G Operations	921.00
FI000479	7.72%	1,085.69	A&G Operations	921.00
FI000480	3.86%	542.85	A&G Operations	921.00
FI000481	13.65%	1,919.65	A&G Operations	921.00
FI000482	13.65%	1,919.65	A&G Operations	921.00
FI000642	10.54%	1,482.28	A&G Operations	921.00
FI000644	10.54%	1,482.28	Distribution Operations	583.00
FI000485	1.04%	146.26	Production Maintenance	514.00
FI000486	2.08%	292.52	Transmission Operations	566.00
FI000487	7.27%	1,022.41	Distribution Maintenance	598.00
FI000488	1.30%	182.82	Production Operations	502.00
FI000489	1.30%	182.82	Production Operations	505.00
FI000490	1.30%	182.82	Production Maintenance	512.00
FI000491	1.30%	182.82	Production Maintenance	511.00
FI000492	0.39%	54.85	Transmission Operations	563.00
FI000493	0.39%	54.85	Transmission Operations	562.00
FI000494	0.39%	54.85	Transmission Maintenance	571.00
FI000495	0.39%	54.85	Transmission Maintenance	570.00
FI000496	0.90%	126.57	Distribution Operations	583.00
FI000497	0.90%	126.57	Distribution Operations	582.00
FI000498	0.90%	126.57	Distribution Maintenance	593.00
FI000499	0.90%	126.57	Distribution Maintenance	592.00
		0.00		

186200 HAWAII ELECTRIC LIGHT COMPANY

For the month of 09/2006

Project	Work Order	Account	Billable Amount	Corp Admin Rate	Total Billable
	AD001274	P9S730HELBENPASVP7Z406	1.84	.00	1.84
	AD001274	P9S730HELBENPASVP7Z421	3.49	.00	3.49
	AD001274	P9S730HELBENPASVP7Z422	8.39	.00	8.39
	AD001274	P9S730HELBENPASVP7Z423	9.62	.00	9.62
		Project/Work Order Total	193.42	.00	193.42
		H29771 001 Bill to HELCO-Plan/Appr Proj			
	AD001358	PNG210HELBENPASVP7Z150	2,005.29	.00	2,005.29
	AD001358	PNG210HELBENPASVP7Z155	466.20	.00	466.20
	AD001358	PNG210HELBENPASVP7Z406	154.35	.00	154.35
	AD001358	PNG210HELBENPASVP7Z421	292.95	.00	292.95
	AD001358	PNG210HELBENPASVP7Z422	704.34	.00	704.34
	AD001358	PNG210HELBENPASVP7Z423	209.34	.00	209.34
		Project/Work Order Total	3,832.47	.00	3,832.47
		H35458/1 -- IRP-CR-HELCO BASE			
	AD001314	PQE711HELBENPASVP9Z150	851.56	.00	851.56
	AD001314	PQE711HELBENPASVP9Z155	36.54	.00	36.54
	AD001314	PQE711HELBENPASVP9Z406	51.46	.00	51.46
	AD001314	PQE711HELBENPASVP9Z421	97.66	.00	97.66
	AD001314	PQE711HELBENPASVP9Z422	234.78	.00	234.78
	AD001314	PQE711HELBENPASVP9Z423	75.21	.00	75.21
	AD001314	PQE711HELBENPASVP9Z501	20.00	.00	20.00
	AD001314	P9V711HELBENPASVP9Z522	176.90	.00	176.90
		Project/Work Order Total	1,544.11	.00	1,544.11
		H35906 - HECO VP Media Relations Support			
	AD000320	P1V752HELBENPAVP1ZZ150	82.90	.00	82.90
	AD000320	P1V752HELBENPAVP1ZZ155	46.75-	.00	46.75-
	AD000320	P1V752HELBENPAVP1ZZ406	1.84	.00	1.84
	AD000320	P1V752HELBENPAVP1ZZ421	3.49	.00	3.49
	AD000320	P1V752HELBENPAVP1ZZ422	8.39	.00	8.39
	AD000320	P1V752HELBENPAVP1ZZ423	3.06	.00	3.06
		Project/Work Order Total	52.93	.00	52.93
		MIMS Processing Fees - HELCO			
	HR000129	PEZ895HELBENPAVP2ZZ451	14,063.39	.00	14,063.39

Hawaii Electric Light Company, Inc.
MIMS Reallocation
Nov, 2006

(RA=HAA)
(EE=501)

Coding:	%	Nov, 2006	Charged To	Acct No
24200 000	100.00%	(37,512.25)		
FI000476	15.43%	5,788.14	A&G Operations	921.00
FI000478	3.86%	1,447.97	A&G Operations	921.00
FI000479	7.72%	2,895.95	A&G Operations	921.00
FI000480	3.86%	1,447.97	A&G Operations	921.00
FI000481	13.65%	5,120.42	A&G Operations	921.00
FI000482	13.65%	5,120.42	A&G Operations	921.00
FI000642	10.54%	3,953.79	A&G Operations	921.00
FI000644	10.54%	3,953.79	Distribution Operations	583.00
FI000485	1.04%	390.13	Production Maintenance	514.00
FI000486	2.08%	780.25	Transmission Operations	566.00
FI000487	7.27%	2,727.14	Distribution Maintenance	598.00
FI000488	1.30%	487.66	Production Operations	502.00
FI000489	1.30%	487.66	Production Operations	505.00
FI000490	1.30%	487.66	Production Maintenance	512.00
FI000491	1.30%	487.66	Production Maintenance	511.00
FI000492	0.39%	146.30	Transmission Operations	563.00
FI000493	0.39%	146.30	Transmission Operations	562.00
FI000494	0.39%	146.30	Transmission Maintenance	571.00
FI000495	0.39%	146.30	Transmission Maintenance	570.00
FI000496	0.90%	337.61	Distribution Operations	583.00
FI000497	0.90%	337.61	Distribution Operations	582.00
FI000498	0.90%	337.61	Distribution Maintenance	593.00
FI000499	0.90%	337.61	Distribution Maintenance	592.00
		0.00		

186200 HAWAII ELECTRIC LIGHT COMPANY

For the month of 10/2006

Project	Work Order	Account	Billable Amount	Corp Admin Rate	Total Billable
	AD001314	P3V711HELBENPASVP9Z150	221.06	.00	221.06
	AD001314	P3V711HELBENPASVP9Z155	74.38-	.00	74.38-
	AD001314	P3V711HELBENPASVP9Z406	4.90	.00	4.90
	AD001314	P3V711HELBENPASVP9Z421	9.30	.00	9.30
	AD001314	P3V711HELBENPASVP9Z422	22.36	.00	22.36
	AD001314	P3V711HELBENPASVP9Z423	12.42	.00	12.42
	AD001314	P9V711HELBENPASVP9Z522	128.60	.00	128.60
		Project/Work Order Total	1,635.71	.00	1,635.71
		MIMS Processing Fees - HELCO			
	HR000129	PEZ895HELBENPAVP2ZZ451	37,512.25	.00	37,512.25
		Project/Work Order Total	37,512.25	.00	37,512.25
		H24373 001-KEAHOLE J. ERICKSON			
	AD000470	P5V211C04BENPAVP5ZZ150	165.80	.00	165.80
	AD000470	P5V211C04BENPAVP5ZZ155	26.06-	.00	26.06-
	AD000470	P5V211C04BENPAVP5ZZ406	3.68	.00	3.68
	AD000470	P5V211C04BENPAVP5ZZ421	6.98	.00	6.98
	AD000470	P5V211C04BENPAVP5ZZ422	16.77	.00	16.77
	AD000470	P5V211C04BENPAVP5ZZ423	11.83	.00	11.83
		Project/Work Order Total	179.00	.00	179.00
		KGRG, HELCO meetings			
	AD001025	P7V745HELBENPAVP7ZZ150	221.06	.00	221.06
	AD001025	P7V745HELBENPAVP7ZZ155	68.05-	.00	68.05-
	AD001025	P7V745HELBENPAVP7ZZ406	4.90	.00	4.90
	AD001025	P7V745HELBENPAVP7ZZ421	9.30	.00	9.30
	AD001025	P7V745HELBENPAVP7ZZ422	22.36	.00	22.36
	AD001025	P7V745HELBENPAVP7ZZ423	12.96	.00	12.96
		Project/Work Order Total	202.53	.00	202.53
		H35907 001 - Mgmt.Svcs.Fees-Ctrlr's Ofc.			
	AD000237	PAA815HELBENPAZZZZZ150	922.80	.00	922.80
	AD000237	PAA815HELBENPAZZZZZ155	246.37-	.00	246.37-
	AD000237	PAA815HELBENPAZZZZZ406	36.75	.00	36.75
	AD000237	PAA815HELBENPAZZZZZ421	69.75	.00	69.75
	AD000237	PAA815HELBENPAZZZZZ422	167.70	.00	167.70
	AD000237	PAA815HELBENPAZZZZZ423	57.28	.00	57.28

Hawaii Electric Light Company, Inc.
MIMS Reallocation
Dec, 2006

(RA=HAA)
(EE=501)

Coding:	%	Dec, 2006	Charged To	Acct No
24200 000	100.00%	(13,359.38)		
FI000476	15.43%	2,061.37	A&G Operations	921.00
FI000478	3.86%	515.67	A&G Operations	921.00
FI000479	7.72%	1,031.34	A&G Operations	921.00
FI000480	3.86%	515.67	A&G Operations	921.00
FI000481	13.65%	1,823.56	A&G Operations	921.00
FI000482	13.65%	1,823.56	A&G Operations	921.00
FI000642	10.54%	1,408.08	A&G Operations	921.00
FI000644	10.54%	1,408.08	Distribution Operations	583.00
FI000485	1.04%	138.94	Production Maintenance	514.00
FI000486	2.08%	277.88	Transmission Operations	566.00
FI000487	7.27%	971.23	Distribution Maintenance	598.00
FI000488	1.30%	173.67	Production Operations	502.00
FI000489	1.30%	173.67	Production Operations	505.00
FI000490	1.30%	173.67	Production Maintenance	512.00
FI000491	1.30%	173.67	Production Maintenance	511.00
FI000492	0.39%	52.10	Transmission Operations	563.00
FI000493	0.39%	52.10	Transmission Operations	562.00
FI000494	0.39%	52.10	Transmission Maintenance	571.00
FI000495	0.39%	52.10	Transmission Maintenance	570.00
FI000496	0.90%	120.23	Distribution Operations	583.00
FI000497	0.90%	120.23	Distribution Operations	582.00
FI000498	0.90%	120.23	Distribution Maintenance	593.00
FI000499	0.90%	120.23	Distribution Maintenance	592.00
		0.00		

186200 HAWAII ELECTRIC LIGHT COMPANY

For the month of 11/2006

Project	Work Order	Account	Billable Amount	Corp Admin Rate	Total Billable
	AD001314	PQE711HELBENPASVP9Z155	9.11-	.00	9.11-
	AD001314	PQE711HELBENPASVP9Z406	35.10	.00	35.10
	AD001314	PQE711HELBENPASVP9Z421	41.85	.00	41.85
	AD001314	PQE711HELBENPASVP9Z422	108.54	.00	108.54
	AD001314	PQE711HELBENPASVP9Z423	31.68	.00	31.68
		Project/Work Order Total	573.01	.00	573.01
		H35906 - HECO VP Media Relations Support			
	AD000320	P1V752HELBENPAVP1ZZ150	165.80	.00	165.80
	AD000320	P1V752HELBENPAVP1ZZ155	97.38-	.00	97.38-
	AD000320	P1V752HELBENPAVP1ZZ406	5.85	.00	5.85
	AD000320	P1V752HELBENPAVP1ZZ421	6.98	.00	6.98
	AD000320	P1V752HELBENPAVP1ZZ422	18.09	.00	18.09
	AD000320	P1V752HELBENPAVP1ZZ423	6.09	.00	6.09
		Project/Work Order Total	105.43	.00	105.43
		MIMS Processing Fees - HELCO			
	HR000129	PBZ895HELBENPAVP2ZZ451	13,359.38	.00	13,359.38
		Project/Work Order Total	13,359.38	.00	13,359.38
		KGRG, HELCO meetings			
	AD001025	P7V745HELBENPAVP7ZZ150	221.06	.00	221.06
	AD001025	P7V745HELBENPAVP7ZZ155	66.74-	.00	66.74-
	AD001025	P7V745HELBENPAVP7ZZ406	7.80	.00	7.80
	AD001025	P7V745HELBENPAVP7ZZ421	9.30	.00	9.30
	AD001025	P7V745HELBENPAVP7ZZ422	24.12	.00	24.12
	AD001025	P7V745HELBENPAVP7ZZ423	13.75	.00	13.75
		Project/Work Order Total	209.29	.00	209.29
		H35907 001 - Mgmt.Svcs.Fees-Ctrlr's Ofc.			
	AD000237	PAA815HELBENPAZZZZZ150	1,045.84	.00	1,045.84
	AD000237	PAA815HELBENPAZZZZZ155	166.19-	.00	166.19-
	AD000237	PAA815HELBENPAZZZZZ406	66.30	.00	66.30
	AD000237	PAA815HELBENPAZZZZZ421	79.05	.00	79.05
	AD000237	PAA815HELBENPAZZZZZ422	205.02	.00	205.02
	AD000237	PAA815HELBENPAZZZZZ423	78.39	.00	78.39
		Project/Work Order Total	1,308.41	.00	1,308.41

CA-SIR-42

Ref: T-11, page 2, & HELCO-1102 (Employee Count).

Please update HELCO-1102 with actual month-end employee counts for November 2006.

HELCO Response:

HELCO-1102 has been updated through November 2006 and is shown on page 2 of this response.

ACTUAL EMPLOYEE COUNT (JAN-NOV 2006) AND PROJECTED EMPLOYEE COUNT *(DEC 2006)*

DEPARTMENT		ACTUAL (A) YEAR-END 2005	(B) 31-Jan 2006	(C) 28-Feb 2006	(D) 31-Mar 2006	(E) 30-Apr 2006	(F) 31-May 2006	(G) 30-Jun 2006	(H) 31-Jul 2006	(I) 31-Aug 2006	(J) 30-Sep 2006	(I) 31-Oct 2006	(J) 30-Nov 2006	TY 2006 (K) 31-Dec 2006
Accounting	AO	16	16	16	16	17	17	17	16	16	16	16	16	17
Customer Services	CO	37	35	35	39	38	37	37	38	38	38	37	37	39
Distribution	DO	109	108	109	109	110	110	112	111	110	109	110	107	123
Energy Services	EO	11	11	11	11	10	10	10	9	9	10	10	10	12
Production	GO	88	90	91	91	96	96	96	97	97	96	95	93	101
Administration	NO	13	14	14	15	15	15	15	15	15	14	14	14	16
Engineering	WO	56	56	55	55	57	57	59	57	57	56	58	57	66
President's Office	9P	1	1	1	1	2	2	2	2	2	2	2	2	2
TOTAL		331	331	332	337	345	344	348	345	344	341	342	336	376

SOURCE:
Column A - HELCO-1101, Page 1
Column B-J - DARS 635 Employee Count by Department/Division within VP Function
Column K - *HELCO-1101, Page 1*

(UPDATED 1/12/07)

CA-SIR-43

Ref: T-11, page 2, & HELCO-1102 (Employee Count).

Please update HELCO-1102 with actual month-end employee counts for December 2006, as the data becomes available.

HELCO Response:

HELCO-1102 has been updated through December 2006 and is shown on page 2 of this response.

ACTUAL EMPLOYEE COUNT (JAN-DEC 2006) AND PROJECTED EMPLOYEE COUNT (DEC 2006)

DEPARTMENT		ACTUAL (A) YEAR-END 2005	(B) 31-Jan 2006	(C) 28-Feb 2006	(D) 31-Mar 2006	(E) 30-Apr 2006	(F) 31-May 2006	(G) 30-Jun 2006	(H) 31-Jul 2006	(I) 31-Aug 2006	(J) 30-Sep 2006	(I) 31-Oct 2006	(J) 30-Nov 2006	(J) 31-Dec 2006	TY 2006 (K) 31-Dec 2006
Accounting	AO	16	16	16	16	17	17	17	16	16	16	16	16	16	17
Customer Services	CO	37	35	35	39	38	37	37	38	38	38	37	37	39	39
Distribution	DO	109	108	109	109	110	110	112	111	110	109	110	107	107	123
Energy Services	EO	11	11	11	11	10	10	10	9	9	10	10	10	10	12
Production	GO	88	90	91	91	96	96	96	97	97	96	95	93	96	101
Administration	NO	13	14	14	15	15	15	15	15	15	14	14	14	14	16
Engineering	WO	56	56	55	55	57	57	59	57	57	56	58	57	56	66
President's Office	9P	1	1	1	1	2	2	2	2	2	2	2	2	2	2
TOTAL		331	331	332	337	345	344	348	345	344	341	342	336	340	376

SOURCE:
Column A - HELCO-1101, Page 1
Column B-J - DARS 635 Employee Count by Department/Division within VP Function
Column K - HELCO-1101, Page 1

CA-SIR-44

Ref: HELCO-WP-1201 & Response to CA-IR-163 (Keahole Depreciable Plant).

In response to CA-IR-163, the Company provided depreciable plant investment for Keahole CT-4 and CT-5 at December 31, 2005, separately showing HELCO's investment in common facilities. Please provide the following:

a. Please provide comparable information regarding HELCO's plant investment in Keahole CT-4 and CT-5 at test year end, consistent with the proposed update approach recommended by HELCO T-14 (e.g., October 2006 actual plus November-December 2006 forecast additions).
b. Referring to part (a) above, please provide the requested information in both hard copy and spreadsheet file format, comparable to HELCO's response to CA-IR-163.

HELCO Response:

a. The depreciable plant balance by plant account as of December 31, 2006, for Keahole CT-4, Keahole CT-5 and the common facilities located at Keahole is attached. These amounts are preliminary 2006 year end balances as the financial statements have not been finalized as of the date of this submission.

The $847,210 total balance decrease from $117,689,560 as identified on page 2 of CA-IR-163 to $116,842,350 on page 3 of this response is comprised of the 2006 retirement of assets amounting to $767,180 (included in the $1,258,084 production retirements reflected in page 4 of CA-SIR-47) and a negative 2006 plant addition of $80,030 (see CA-IR-447, HELCO T-15).

Please note that Keahole CT-4, CT-5 and the common facilities were unitized in 2006. Unitization is the process of allocating the project costs to the individual assets. The differences in the classification of the costs by account between page 2 of CA-IR-163 and page 3 of this response are due to the effects of unitization and the retirement and addition mentioned above.

b. The requested information is being provided in both hard copy and electronically.

Hawaii Electric Light Company, Inc.
Keahole CT-4 and CT-5 Depreciable Plant Balance
As of December 31, 2006

Account	Description	Common Facilities (a)	Common Facilities (b)	CT-4	CT-5	Total
Other Production - Internal Combustion Engine Plants						
341	Structures & Improvements	981,690.13	3,363,745.62	5,237,614.71	7,299,528.51	16,882,578.97
342	Fuel Holders, Producers, & Accessories	376,270.02		4,658,008.56	4,256,588.56	9,290,867.14
343	Prime Movers		13,853,216.21	16,505,509.05	11,653,917.57	42,012,642.83
344	Generators	3,266,581.66		20,781,017.76	9,140,842.88	33,188,442.30
345	Accessory Electric Equipment	1,076,332.21		717,970.55	630,175.58	2,424,478.34
346	Miscellaneous Power Plant Equipment	1,869,277.98				1,869,277.98
Transmission Plant						
352	Structures & Improvements - Substation			275,113.02	263,570.80	538,683.82
353	Substation Equipment		3,262.24	5,182,734.54	5,002,961.46	10,188,958.24
355	Poles & Fixtures		2,259.13			2,259.13
356	Overhead conductors & Devices		5,369.80			5,369.80
Distribution Plant						
362	Substation Equipment					-
General Plant						
390	Structures & Improvements					-
397	Communication Equipment			237,797.82	200,993.03	438,790.85
		7,570,152.00	17,227,853.00	53,595,766.01	38,448,578.39	116,842,349.40

NOTES:
a Warehouse/shop, fire protection system, water treatment system for existing generating units (allowed in rate base per D&O 18365)
b Warehouse/shop, fire protection system, water treatment system not related to existing generating units

CA-SIR-45

Ref: HELCO Responses to CA-IR-367 & CA-IR-427 (Keahole Plant Additons).

CA-IR-367 sought a descriptive listing of each project set forth on HELCO-WP-1401 related to the Keahole power plant and any updates or revisions to the project completion date or completed cost estimate. The response to CA-IR-427 appears to include additional Keahole related projects. Please provide the following:

a. Please provide a descriptive listing of each new Keahole project appearing in the response to CA-IR-427.
b. Referring to the response to part (a) above, please explain whether each project is anticipated to be closed and included in plant in service during 2006.

HELCO Response:

a. A descriptive listing of each new Keahole project appearing on Attachment 1 in response to CA-IR-427 can be found in HELCO-1501, Keahole CT-4 and CT-5 Cost Report commencing on the following pages:

   H0000413 Kea Warehouse/Shop Bldg-PSD – page 17 of 98

   H0000414 Kea Water Treatmt Sys-PSD-CT4 – page 13 of 98

   H0000415 Kea Water Treatmt Sys-PSD-CT5 – page 13 of 98

   H3147000 Fuel System CT4 – page 12 of 98

   H3166000 Fuel System CT5 – page 12 of 98

   H0000416 Kea Fire Protect Sys-PSD – page 17 of 98

   H3303000 Keahole CT4 SW Stn Add – page 16 of 98

   H3304000 Keahole 20MW CT5 Stn Add – page 16 of 98

b. All of these projects are currently listed on the preliminary 2006 plant addition update as identified in Attachment 1 in response to CA-SIR-51. These projects were previously closed in 2004 with charges being plant added annually since 2004. The overall balance for the Keahole projects is identified in CA-IR-447, HELCO T-15.

CA-SIR-46

Ref: HELCO Responses to CA-IR-367 & CA-IR-427 (Keahole Plant Additions).

The referenced responses provide conflicting information. Please provide the following clarifications:

a. H0001373 Keahole SS Base Mobile. The response to CA-IR-367 indicates that this project was cancelled and later resurrected as H0001454. However, CA-IR-427 still recognizes a $61,194 2006 plant addition for H0001373, while H0001454 appears a new 2006 project in the amount of $58,702.
   1. Are both of these amounts included in HELCO's proposed 2006 plant addition update? Please explain.
   2. Should H0001373 be eliminated from the 2006 additions? Please explain.

b. H0001386 Keahole CT Sound Enclosure. The response to CA-IR-367 indicates that this project was delayed and is scheduled for completion in 1Q2007. However, CA-IR-427 still recognizes a $33,543 2006 plant addition. Should H0001386 be eliminated from the 2006 additions? Please explain.

c. H3126000 Keahole CT4 Combustion Turbine. The response to CA-IR-367 indicates that this project will be completed in conjunction with H001386, which was delayed to 1Q2007. However, CA-IR-427 still shows $17,500 as a 2006 plant addition.
   1. Was this project delayed to 1Q2007? Please explain.
   2. Should H3126000 be eliminated from the 2006 additions? Please explain.

d. H3164000 Keahole CT5 Combustion Turbine. The response to CA-IR-367 indicates that this project will be completed in conjunction with H001386, which was delayed to 1Q2007. However, CA-IR-427 still shows $17,500 as a 2006 plant addition.
   1. Was this project delayed to 1Q2007? Please explain.
   2. Should H3164000 be eliminated from the 2006 additions? Please explain.

e. DHEINZ02 Keahole CT-2/4/5 Safety Barriers. The response to CA-IR-367 indicates that this project will be completed in 2007. However, CA-IR-427 still shows $100,000 as a 2006 plant addition.
   1. Was this project delayed to 2007? Please explain.
   2. Should DHEINZ02 be eliminated from the 2006 additions? Please explain.

f. DHEINZ03 Keahole Acoustic System. The response to CA-IR-367 indicates that this project was cancelled. However, CA-IR-427 still shows $30,000 as a 2006 plant addition.
   1. Was this project cancelled? Please explain.
   2. Should DHEINZ03 be eliminated from the 2006 additions? Please explain.

g. DHEINZ04 Keahole CT2 Black Start. The response to CA-IR-367 indicates that this project will be completed in 2007. However, CA-IR-427 still shows $250,000 as a 2006 plant addition.
   1. Was this project delayed to 2007? Please explain.
   2. Should DHEINZ04 be eliminated from the 2006 additions? Please explain.

h. DHEINZ07 Keahole CT4/5 CO2 System Upgrade. The response to CA-IR-367 indicates that this project was cancelled. However, CA-IR-427 still shows $30,000 as a 2006 plant addition.
   1. Was this project cancelled? Please explain.
   2. Should DHEINZ07 be eliminated from the 2006 additions? Please explain.

HELCO Response:

a. H0001373 Keahole SS Base Mobile. The response to CA-IR-367 was correct in indicating that this project was cancelled and later resurrected as H0001454. Attachment 1 of CA-IR-427 includes the original data that was provided in HELCO-WP-1401 in columns D through H, which includes the $61,194. The updated information for these projects was included column I, labeled "Updated 2006 Plant Addition". The plant addition amounts for H0001373 and H0001454 are listed as zero and $58,702, respectively. H0001454 has a plant addition date of 11/22/06.

b. H0001386 Keahole CT Sound Enclosure. The response to CA-IR-367 was correct in indicating that this project was delayed, but the completion may be later than 1Q2007. Attachment 1 of CA-IR-427 includes the original data that was provided in HELCO-WP-1401 in columns D through H, which includes the $33,543. The updated information for this project was included column I, labeled "Updated 2006 Plant Addition". The plant addition amount for H0001386 was listed as zero. However, the description for this project, provided in response to CA-IR-367 was incorrect. The project involves the installation of a closed circuit video system inside of the CT-4 and CT-5 noise enclosures to provide HELCO operators with remote visual surveillance capability the equipment.

c. H3126000 Keahole CT4 Combustion Turbine. Completion of this project has been delayed due to a delay in closing out one remaining contract. Close out of this project is scheduled for completion in 1Q2007 or later pending resolution of the contract dispute. CA-IR-427 identified $17,500 as the original amount forecasted for plant addition in HELCO-WP-1401 and a credit of $594,242 as the update to the 2006 plant addition for H3126000 specifically.

However, the overall 2006 plant addition balance for the Keahole projects is a credit of approximately $80,028, which is discussed in CA-IR-447, T-15.

d. H3164000 Keahole CT5 Combustion Turbine. Completion of this project has been delayed due to a delay in closing out one remaining contract. Close out of this project is scheduled for completion in 1Q2007 or later pending resolution of the contract dispute. CA-IR-427 identified $17,500 as the original amount forecasted for plant addition in HELCO-WP-1401 and a credit of $934,516 as the update to the 2006 plant addition for H3164000 specifically. However, the overall 2006 plant addition balance for the Keahole projects is a credit of approximately $80,028, which is discussed in CA-IR-447, T-15.

e. DHEINZ02 Keahole CT-2/4/5 Safety Barriers. The response to CA-IR-367 was correct in indicating that this project will be completed in 2007. Attachment 1 of CA-IR-427 includes the original data that was provided in HELCO-WP-1401 in columns D through H, which includes the $100,000. The updated information for this project was included column I, labeled "Updated 2006 Plant Addition". The plant addition amount for DHEINZ02 was listed as zero.

f. DHEINZ03 Keahole Acoustic System. The response to CA-IR-367 was correct in indicating that this project was cancelled. Attachment 1 of CA-IR-427 includes the original data that was provided in HELCO-WP-1401 in columns D through H, which includes the $30,000. The updated information for this project was included column I, labeled "Updated 2006 Plant Addition". The plant addition amount for DHEINZ03 was listed as zero.

g. DHEINZ04 Keahole CT2 Black Start. The response to CA-IR-367 was correct in indicating that this project will be completed in 2007. Attachment 1 of CA-IR-427 includes the original data that was provided in HELCO-WP-1401 in columns D through H, which

includes the $250,000. The updated information for this project was included column I, labeled "Updated 2006 Plant Addition". The plant addition amount for DHEINZ04 was listed as zero.

h. DHEINZ07 Keahole CT4/5 CO2 System Upgrade. The response to CA-IR-367 was correct in indicating that this project was cancelled. Attachment 1 of CA-IR-427 includes the original data that was provided in HELCO-WP-1401 in columns D through H, which includes the $30,000. The updated information for this project was included column I, labeled "Updated 2006 Plant Addition". The plant addition amount for DHEINZ07 was listed as zero.

CA-SIR-47

Ref: HELCO-WP-1401 & Responses to CA-IR-427 & CA-IR-426 (Plant Additions).

In response to CA-IR-427, HELCO updated 2006 plant additions to reflect actual amounts through October 2006 with revised forecast amounts for November and December 2006. In response to CA-IR-426, the Company indicated, in part, that it plans to adjust the 2006 test year CIAC forecast at the end of 2006 with actual year end information. Please provide the following:

a. Please clarify which of the following rate base components the Company plans to update to reflect actual 2006 activity or account balances at year end 2006:
   1. Plant additions;
   2. Plant retirements;
   3. Depreciation reserve;
   4. Deferred income tax reserve;
   5. Contributions in aid of construction; and
   6. Customer advances.

b. Assuming the response to part (a) above indicates that plant additions will reflect actual activity through October 2006 plus forecast additions for November-December 2006 but plant retirements will not be similarly quantified (i.e., instead leaving retirements unadjusted from the Company's original filing), please explain how using different approaches to value plant additions and retirements will reasonably balance these related components of rate base.

c. Assuming the response to part (a) above indicates that plant additions will reflect actual activity through October 2006 plus forecast additions for November-December 2006 but actual CIAC and Customer Advances amounts at December 31, 2006, will be recognized, please explain how using different approaches to value plant additions and related customer supplied funds will reasonably balance the components of rate base – particularly, since actual CIAC and Customer Advance collections in November-December 2006 will be disconnected from forecasted plant addition activity in those months.

HELCO Response:

a. The following are being provided at this time:

- Preliminary 2006 activity for plant additions;
- Preliminary 2006 activity for plant retirements;
- Preliminary 2006 utility plant balance summary;
- Preliminary 2006 year end balances for depreciation reserve;
- Preliminary 2006 year end balances for deferred income tax;

- Preliminary 2006 activity for contributions in aid of construction; and
- Preliminary 2006 activity for customer advances.

Preliminary 2006 plant additions contributions in aid of construction and customer advances are provided in response to CA-SIR-51, part b. Preliminary 2006 year end balance for deferred income tax is provided in response to CA-SIR-18, part a. Preliminary 2006 plant retirements, utility plant balance summary, and year end balance for depreciation reserve are attached. Preliminary numbers are being presented because the financial statements have not been finalized as of the date of this submission. Final 2006 activity and year end balances will be provided as soon they become available.

b. Not applicable.

c. Not applicable.

HAWAII ELECTRIC LIGHT COMPANY, INC.
PLANT RETIREMENTS
PRELIMINARY 2006

	Plant Retirements Preliminary 2006
Production	1,258,084
Transmission	326,479
Distribution	
Land	-
Struct & Subst	56,381
Poles, Lines, R/W	656,906
Transformers	661,927
Services	109,951
Meters	395,025
General	736,326
Vehicles	452,966
Total Retirements	4,654,045

Source: Accounting Records

HAWAII ELECTRIC LIGHT COMPANY, INC.
UTILITY PLANT SUMMARY
PRELIMINARY 2006

A	B	C	D	E	F	G
	Beg Bal 12/31/2005	Preliminary Additions	Preliminary Joint Pole Sales	Preliminary Retirements	Preliminary Transfers & Adjustments	Preliminary End Bal 12/31/2006
Production Plant	221,467,267	5,748,004		(1,258,084)	(1,873,074)	224,084,113
Transmission Plant	107,521,096	4,295,115	(18,808)	(326,479)	10,031,447	121,502,371
Distribution Plant	383,265,763	34,759,973	(779,145)	(1,880,190)	(514,667)	414,851,734
General Plant	57,348,874	2,925,995		(1,189,292)	(7,202,071)	51,883,506
Total	769,603,000	47,729,087	(797,953)	(4,654,045)	441,635 (a)	812,321,724

NOTES:

(a) The Inter-island Communication System (ICS) has been a non-utility business operation since 1991. In June 2006, interisland traffic on the ICS ceased, and it was determined that certain assets were still necessary for utility operations. The original cost and accumulated depreciation related to these assets were therefore transferred to Utility Plant In Service and Accumulated Depreciation, respectively. The original cost for the ICS assets being transferred to Utility Plant in Service, $441,635, is included in rate base as part of net plant additions.

Balances include land

SOURCE:
Column B: HELCO-WP-1407, page 5
Columns C - F: Accounting Records

HAWAII ELECTRIC LIGHT COMPANY, INC.
ACCUMULATED DEPRECIATION
PRELIMINARY 2006

(In Thousands)

		Preliminary 2006
1	Accum Depn Beg Bal @ 1/1/06	317,408
	Plus:	
2	Depreciation Accrual	32,856
2a	Depreciation Transfer (A)	216
3	Salvage (B)	(19)
	Less:	
4	Retirements	(4,654)
5	Cost of Removal	(1,883)
6	Accum Depn End Bal @ 12/31	343,924
7	Average Balance for the Year	330,666

(A) The Inter-island Communication System (ICS) has been a non-utility business operation since 1991. In June 2006, interisland traffic on the ICS ceased, and it was determined that certain assets were still necessary for utility operations. The original cost and accumulated depreciation related to these assets were therefore transferred to Utility Plant In Service and Accumulated Depreciation, respectively.

(B)	Gross Salvage	29
	Damage Claim Adjustment	(48)
	Salvage	(19)

Source: Accounting Records

CA-SIR-48

Ref: HELCO-WP-1401 & Response to CA-IR-431 (Plant Additions).

Part (b) of the referenced response indicates that the estimated cash contribution of $564,962 for Project H0001360, Kuakini Distr & Svcs, has not yet been paid by the County of Hawaii because the project has not been completed. Please provide the following:

a. Please confirm that the Company has forecasted the completion of this project in 2006 and included the cost of Project H0001360 in year-end plant in service for purposes of calculating rate base. If this cannot be confirmed, please explain.
b. Please confirm that the Company has not included the cash contribution related to Project H0001360 for purposes of calculating rate base. If this cannot be confirmed, please explain.
c. Referring to parts (a) and (b) above, please confirm that the Company has proposed that the plant investment not funded by the cash contribution should be recognized for purposes of calculating rate base on which existing ratepayers would pay a return. If this cannot be confirmed, please explain.

HELCO Response:

a. Confirmed in Attachment 1 of CA-IR-427. Project H0001360 was completed in 2006 and its cost was included in the year-end plant in service.

b. Confirmed in CA-IR-447(T-14) WP-1409A updated. The $564,962 (estimated amount) was not collected in 2006 and therefore not included as a cash contribution for the purposes of calculating rate base.

c. Confirmed. The plant investment not funded by the cash contribution should be recognized for purposes of calculating rate base.

CA-SIR-49

Ref: HELCO-WP-1401, Responses to CA-IR-427 & CA-IR-432 (Plant Additions).

The response to CA-IR-427 indicates that the 2006 plant addition for Project H0001368, Kaloko Unit #2 substation transformer, is $816,635. The response to CA-IR-432 indicates that the developer advance was for 60% of the cost of Project H0001368, based on the ratio of estimated load demand of the development to the total substation transformer capacity. Please provide the following:

a. Will the Kaloko Heights subdivision be completed and fully built out by December 31, 2006? Please explain.
b. If the full build out of the Kaloko Heights subdivision results in load demand in excess of 6MVA, will the developer provide an additional contribution? Please explain.
c. In the absence of the Kaloko Heights subdivision, would it have been necessary for HELCO to undertake Project H0001368? Please explain.

HELCO Response:

a. No, the Kaloko Heights subdivision was not completed nor fully built out in 2006 due to developer delays. The on-site project was not included in the 2006 close to plant forecast. The project that was included in the close to plant forecast was the off-site project, Kaloko #2 Substation Transformer, which was energized in December 2006.

b. No, if the full build out of the Kaloko Heights subdivision results in a load demand in excess of 6MVA, the developer is normally not charged for the additional capacity. Since the individual subdivision meters do not have the capability to monitor demand, metering devices must be installed to measure the demand for the entire subdivision. The demand capacity of the subdivision is calculated by the developer's electrical engineering consultant and is confirmed by HELCO Engineering Department. If HELCO determined that the estimated demand is un-reasonable, HELCO will normally work with the developer's

electrical consultant and agree on a revised estimated demand prior to preparing the proposal letter. If there is a change in the service request information, such as the number of units or a change in zoning, the developer's electrical consultant or HELCO will recalculate the estimated demand and HELCO will submit a revised proposal letter to the developer.

c. No, in absence of the Kaloko Heights subdivision, project H0001368 would not have been required because the existing Kaloko Unit #1 transformer would have adequate capacity to serve the area.

CA-SIR-50

Ref: HELCO-WP-1401 & Response to CA-IR-475 (Plant Additions).

In response to part (b) of CA-IR-475, HELCO objected to providing copies of confidential Board of Director's minutes and internal management meeting minutes, even pursuant to a protective order. Please provide the following:

a. Please provide the legal basis for the Company's stated objection.
b. Has the Commission previously concurred that Hawaii utilities are not required to produce copies of Board of Director's minutes and internal management meeting minutes, when such documents specifically relate to costs or transactions included in the ratemaking process?
   1. If so, please explain and provide a specific citation to such Commission findings.
   2. If no, please provide copies of the documentation requested in CA-IR-475.

HELCO Response:

Without waiving any of the objections set forth below, HELCO provides the following response. The HELCO statutory board approved the 2006 capital expenditures budget in the amount of $43 million. (The response to CA-IR-475, subpart b erroneously stated that the HECO board approved the capital expenditures budget. HELCO has two boards, an advisory board which does not have authority to approve the capital expenditures budget, and a statutory board, which does have authority to approve the capital expenditures budget.) As is generally the practice, for the HELCO 2006 capital expenditures budget, the HELCO statutory board approved the overall capital expenditures budget, and did not approve specific projects included in the capital expenditures budget. The material that HELCO's statutory board received in connection with the approval of HELCO's 2006 capital expenditures budget was included as page 10 of HELCO's 2006 Capital Expenditures Budget that was filed with the Commission on December 30, 2005, a copy of which is provided as Attachment 1 to this response. As a result, in connection with the board approval of the capital expenditures budget, additional materials concerning specific capital projects were not provided to the HELCO statutory board.

The resolution adopted via unanimous written consent by the members of the HELCO statutory board states that the board wishes to approve 2006 capital expenditures budget and, therefore, approval is given for the 2006 revised capital expenditures budget in the amount of $43 million as shown in Attachment 1, which is page 10 as indicated above. Because approval was given via unanimous written consent, there was no meeting (and, therefore, no minutes) of the statutory board at which time HELCO's 2006 capital expenditures budget was approved.

HELCO generally objects to providing confidential "Board of Director's minutes and internal management meeting minutes" on public policy grounds as stated in the response to CA-IR-475, subpart b.

a. Please see the introduction above to these responses.

b. Please see the introduction above to these responses.

Hawaii Electric Light Company, Inc. • PO Box 1027 • Hilo, HI 96721-1027

Warren H. W. Lee, P.E.
President

December 30, 2005

FILED
2005 DEC 30 A 10:53
PUBLIC UTILITIES COMMISSION

The Honorable Chairman and Members of the
Hawaii Public Utilities Commission
465 South King Street, First Floor
Kekuanaoa Building
Honolulu, Hawaii 96813

Dear Commissioners:

Subject: HELCO 2006 Capital Expenditures Budget

Enclosed in accordance with the provisions of paragraph 2.3(g)(1) of General Order No. 7, are nine copies of the Hawaii Electric Light Company, Inc.'s (HELCO) 2006 Capital Expenditures Budget. HELCO has included (1) a brief description of each project that is expected to cost $1 million or more for the upcoming years and each program that is expected to cost $1 million or more annually, and a statement as to the primary reasons for the project/program, (2) an explanation of how a project/program relates to the overall operational objectives of HELCO, and is consistent with HELCO's Integrated Resource Plan, and (3) the estimated start and completion dates for each project.[1] The start date is the date that expenditures are first charged to construction work in progress (CWIP) and when allowance for funds used during construction (AFUDC) is first applied. Prior to when costs are charged to CWIP, costs are generally charged to and accumulated in preliminary engineering. The end date is the date the project is declared used or useful.

Also enclosed are nine copies of our schedule on Property Held for Future Use in conformance with Decision and Order No. 6275 of Docket No. 3705.

The 2006 Capital Expenditures Budget lists projects as of December 2005, that we anticipate spending $1 million or more for the upcoming years.

[1] This information is being provided pursuant to Decision and Order No. 21002, filed May 27, 2004, in Docket No. 03-0257.

The 2006-2010 Capital Expenditures Program is our projection of our capital expenditure requirements for the next five years and is subject to revision based on customer needs and our continual analysis of system requirements and costs.

Also included are graphs comparing the one-year budget and five-year program to previous years.

Sincerely,

Darren Lee

Enclosures

cc: Division of Consumer Advocacy w/enclosures (2)
M. Kaya w/enclosures (1)

Hawaii Electric Light Company, Inc.

2006
Capital Expenditures Budget

December 23, 2005

Hawaii Electric Light Company, Inc.
2006 Capital Expenditures Budget
December 23, 2005

Five-Year Summary
2006 - 2010 Capital Expenditures Program
($ in Thousands)

	2006	2007	2008	2009	2010
Energy Delivery	31	36	27	28	18
Power Supply	8	9	27	28	2
Other	4	4	2	2	2
Total Capital Expenditures	**43**	**49**	**56**	**58**	**22**

Total Capital Expenditures 2006-2010 Inclusive: $ 228 million

General Notes:

The budget is based on the June 2005 Sales and Peak update.

	% increase				
	2006	**2007**	**2008**	**2009**	**2010**
Peak Demand	2.7	2.2	1.8	2.2	1.8
Sales	2.8	2.4	2.3	2.1	2.0

Warren H. W. Lee 22 DEC 2005

Approved: Warren H. W. Lee **Date**
President

CA-SIR-51

Ref: HELCO T-14 Response to CA-IR-448 (Corrections to Plant Additions, CIAC & Advances).

Please provide the following:

a. Does CA-IR-448, Attachment 1, of the response by HELCO T-14 include all of the known corrections and revisions to plant additions, customer advances and contributions in aid of construction? Please explain.
b. Referring to the response to part (a) above, please identify each additional correction and/or revision to plant additions, customer advances and contributions in aid of construction that is not listed on Attachment 1 of the response to CA-IR-448.
c. Referring to Attachment 1 of the response to CA-IR-448, it is unclear whether each identified correction increases or decreases rate base (e.g., increasing an amount typically deducted from rate base results in a reduction to rate base). Please indicate whether each identified correction has the effect of increasing or decreasing rate base.

HELCO Response:

a. CA-IR-448, Attachment 1 includes all of the known corrections and revisions to plant additions, customer advances and contributions in aid of construction as of 11/9/06.

b. Refer to Attachment 1 of this response for the latest update to the 2006 plant addition. These are preliminary numbers as of 12/31/06. Updates for customer advances and contributions in aid of construction are included in this response as CA-SIR 51 Updates to HELCO WP-1401(A) thru (F). These are also preliminary numbers as of 12/31/06. Preliminary numbers are being presented because the financial statements have not been finalized as of the date of this submission. Final 2006 numbers will be provided as soon they become available.

c. Since the information included in Attachment 1 of CA-IR-448 was based on November's Pillar data as of 11/9/06, the information has been updated based on the preliminary numbers as of 12/31/06. Preliminary numbers are being presented because the financial statements have not been finalized as of the date of this submission. Final 2006 numbers will be

provided as soon they become available. Both numbers have been included in Attachment 2 of this response with the overall impact of the current information in comparison to what was presented in the direct testimony. In general, increases to plant additions increase rate base and decreases in contributions or advances increase rate base.

Hawaii Electric Light Company, Inc.
2006 PLANT ADDITIONS
UPDATES

	A	B	C	D	E	F	G					H
				WP-1401	CA-427/447	UPDATED						
	Function	Proj No	Project Description	2006 Plant Additions	2006 Plant Additions	2006 PLANT ADDITIONS[32]	Current Plant Addition Date[25]					Notes
1	D-Meters	H0000853	AMR - Turtle Meters & Eqpt	536,783	536,919	558,328						31
2	D-Meters	H1001000	PURCHASE NEW KWH METERS	467,713	581,000	599,058						15, 31
3	**D-Meters Total**			1,004,496								
4	D-Poles	H0000444	Palani 12KV UG	121,735	-							
5	D-Poles	H0000700	Sunrise Ridge Ph 2 1		256,458	213,183	12	-	29	-	2006	
6	D-Poles	H0000705	Hawi Conv Ph 5	420,375	446,267	461,136	12	-	22	-	2006	
7	D-Poles	H0000803	RPL PRI Kealoala Rd.		12,909							
8	D-Poles	H0000835	Puueo 11 Regulators		51,121	51,121	8	-	15	-	2006	
9	D-Poles	H0000928	Kapoho Vacation Land Rpl	72,072	71,642							
10	D-Poles	H0000933	Kukuihaele Regulators	84,730	-		4	-	13	-	2005	1
11	D-Poles	H0001146	RPR Kona Palisades UG Ph 3	438,704	336,531	336,531	9	-	7	-	2006	
12	D-Poles	H0001177	Pole Restoration	300,535	300,535	225,546						31
13	D-Poles	H0001180	Replace Old Service Conduct	100,537	50,537	41,930						31
14	D-Poles	H0001264	RPL Ancs Puako-Wailea Rd	130,115	137,499	137,499	2	-	8	-	2006	
15	D-Poles	H0001289	Mark Lau	23,927	143,925	124,880	11	-	7	-	2006	
16	D-Poles	H0001301	Victoria Nuniez	47,016	84,312	84,312	2	-	10	-	2006	
17	D-Poles	H0001352	Distribution Automation	188								
18	D-Poles	H0001359	Palisades Ph 4	62,692	-							
19	D-Poles	H0001365	Puwaa Hiluhilu	29,191	-							
20	D-Poles	H0001366	Ainako Conv Ph 2	187,496	-							
21	D-Poles	H0001379	Hawi Conversion Tsf	142,941	-							
22	D-Poles	H0011000	Unforeseeable UG Cust Req	1,907,232	-							26
23	D-Poles	H1006000	POLE LINE REPL & RELOC	2,190,852	2,437,902	2,545,028						19, 31
24	D-Poles	H1007000	MINOR OTHER OH ADDITIONS	341,455	178,611	355,350						31
25	D-Poles	H1013000	MINOR OH LINE CONVERSIONS	35,743	2,410	2,416						31
26	D-Poles	H1015000	MINOR CABLE REPLACEMENT	207,654	70,447	58,111						31
27	D-Poles	H1017000	MINOR UG EXTN BELOW 20000	1,702,162	1,732,404	489,108						21, 31
28	D-Poles	H3521000	SSPP Requests	703,277	485							26
29	D-Poles	H4750000	OTHER UG ADDITIONS	12,187	76,421	26,343						31
30	**D-Poles Total**			9,262,816								
31	D-Land			-								
32	**D-Land Total**			-								
33	D-ROW	H1009000	MINOR R/W SURVEY	9,996	13,049							
34	**D-ROW Total**			9,996								
35	D-Struc & Sub	H0000010	Battery Replacement	31,988	60,600	39,067						31
36	D-Struc & Sub	H0000852	Keauhou UFR & Supy	26,818	70,753	70,753	1	-	30	-	2006	
37	D-Struc & Sub	H0001128	RPL WAIAU SUB	7,394	53,229	53,229	2	-	21	-	2006	
38	D-Struc & Sub	H0001186	Ainaloa Sub Xfmr Upgrade	41,653	52,152	48,781	12	-	26	-	2006	
39	D-Struc & Sub	H0001190	Undervolt Loadshed-Block 1	229,649	228,519	219,480	10	-	5	-	2006	
40	D-Struc & Sub	H0001191	Undervolt Loadshed-Block 2	84,520	89,903							
41	D-Struc & Sub	H0001192	Undervolt Loadshed-Block 3	87,990	82,743							
42	D-Struc & Sub	H0001193	Undervolt Loadshed-Block 4	267,688	88,278	88,638	4	-	1	-	2006	
43	D-Struc & Sub	H0001194	Undervolt Loadshed-Block 5	168,233	283,407	283,501	10	-	5	-	2006	
44	D-Struc & Sub	H0001200	Honomu Sub Safety Mod	54,068	59,571	59,571	7	-	14	-	2006	
45	D-Struc & Sub	H0001334	Kuakini Sub 2 69kV Drop	13,449	51,038	31,352	11	-	28	-	2006	
46	D-Struc & Sub	H0001361	Komohana Sub Xfmr Upgrade	42,571	46,760	37,471	12	-	14	-	2006	
47	D-Struc & Sub	H0001362	Papaaloa Sub Xfmr Upgrade	38,560	-							
48	D-Struc & Sub	H0001368	Kaloko #2 Sub	816,635	811,953	834,173	12	-	15	-	2006	
49	D-Struc & Sub	H0001377	Hawi, Kaloko Sub Tsf Upgrade	72,552	-							
50	D-Struc & Sub	H1012000	UNIT SUBSTATION PURCHASE	1,628,671	648,603	447,288						31
51	D-Struc & Sub	H1016000	MINOR DISTR SUB ADD	183,104	46,707	46,769						31
52	D-Struc & Sub	H3404000	Substation Equip Repl	292,860	392,925	273,512						31
53	D-Struc & Sub	H3422000	SUBSTN BATTERY BANK REPL	70,651	74,314	61,505						31
54	**D-Struc & Sub Total**			4,159,054								
55	D-Svcs	H0000955	Mauna Lani Res II		102,642	42,642	12	-	15	-	2006	
56	D-Svcs	H0001235	Iolani S/D Inc 4 Ph 1	23,719	23,719	23,719	8	-	2	-	2006	
57	D-Svcs	H0001249	Alii Heights Unit 2 Ph 1 S/D	511,793	512,399	512,399	1	-	13	-	2006	
58	D-Svcs	H0001262	CH DWS Kaieiei Well	337,663	346,388	346,388	11	-	24	-	2006	
59	D-Svcs	H0001265	Kohala Ranch PH IV	89,678	89,678	89,678	1	-	13	-	2006	
60	D-Svcs	H0001270	Manini'owali Offsite	173,177	90,851	278,688	11	-	24	-	2006	
61	D-Svcs	H0001272	SSPP 753-Granahan		28,563	28,563	2	-	9	-	2006	
62	D-Svcs	H0001298	Regina Kaneakua	1,774	32,831	32,831	5	-	1	-	2006	
63	D-Svcs	H0001299	SSPP Unit #796-Camp	14,335	14,335	14,335	8	-	1	-	2006	
64	D-Svcs	H0001311	Wohlschlagel-SSPP Unit #854	19,782	19,782	19,782	8	-	1	-	2006	
65	D-Svcs	H0001313	Halii Kai	121,539	198,137	198,137	8	-	4	-	2006	
66	D-Svcs	H0001316	SH KULANI WASTEWATER TRE	16,625	107,078	107,078	1	-	23	-	2006	
67	D-Svcs	H0001320	SSPP Unit #858 - Arnold	8,141	12,442	12,442	2	-	27	-	2006	
68	D-Svcs	H0001329	Waikoloa Beach Marriott	13,979	73,848	72,830	12	-	21	-	2006	
69	D-Svcs	H0001332	Raymond Kobayashi	9,830	9,830							
70	D-Svcs	H0001333	Kuakini Sub 2 12kV UG	30,324	174,911	174,911	10	-	20	-	2006	
71	D-Svcs	H0001338	SSPP 867 - Camacho	3,341	27,200	27,200	1	-	11	-	2006	
72	D-Svcs	H0001339	SSPP 826 - Riordan	24,913	36,984	36,984	1	-	9	-	2006	
73	D-Svcs	H0001342	HUALALAI PARCEL 10A	56,723	138,565	138,565	1	-	11	-	2006	
74	D-Svcs	H0001360	Kuakini Distr & Svcs	674,283	683,689	888,373	10	-	24	-	2006	23
75	D-Svcs	H0001369	Kaloko #2 Trans/SwGear 12KV UG	63,108	54,069	94,253	12	-	22	-	2006	
76	D-Svcs	H0001370	Waikoloa Beach Dr Ph 1	226,113	-							
77	D-Svcs	H0007000	Unforeseeable OH Cust Req	1,337,973	-							26

Hawaii Electric Light Company, Inc.
2006 PLANT ADDITIONS
UPDATES

	A	B	C	D	E	F	G					H
				WP-1401	CA-427/447	UPDATED						
	Function	Proj No	Project Description	2006 Plant Additions	2006 Plant Additions	2006 PLANT ADDITIONS[32]	Current Plant Addition Date[25]					Notes
78	D-Svcs	H1000000	MINOR OH SERVICES	983,161	1,862,919	2,185,472						17, 31
79	D-Svcs	H1003000	MINOR UG SERVICES	1,172,702	1,484,133	1,577,377						18, 31
80	D-Svcs	H1008000	MINOR OH EXTN BELOW 20000	1,531,781	1,941,865	3,971,035						20, 31
81	**D-Svcs Total**			7,446,458								
82	D-Trfrmrs	H1002000	PURCH TSF AND RELATED EQ	2,459,527	4,112,139	4,544,271						16, 31
83	**D-Trfrmrs Total**			2,459,527								
84	G-Comm	H0000176	Comm Site Air Conditioning	10,000	10,000	8,733						31
85	G-Comm	H0000455	HRD Comm Link	195,042	220,914	220,914	5	-	25	-	2006	
86	G-Comm	H0000456	HRD Supy	41,165	43,791	43,791	5	-	25	-	2006	
87	G-Comm	H0000496	Palani Supy	60,608	-							
88	G-Comm	H0000646	Hawi Basestation	37,780	44,151	41,762	12	-	28	-	2006	
89	G-Comm	H0000726	Waiau Plant Comm Link	39,620	50,797							
90	G-Comm	H0000730	Hawaiian Paradise Park Supy	15,595	11,861	11,861	12	-	28	-	2005	2
91	G-Comm	H0001033	COH MW Upgrade-Hilo Base	37,902	49,597	41,699	12	-	27	-	2006	
92	G-Comm	H0001034	COH MW Upgrade-Kulani Cone	33,798	47,964	48,179	12	-	15	-	2006	
93	G-Comm	H0001035	COH MW Upgrade-Naalehu Past	68,355	107,742	112,488	12	-	27	-	2006	
94	G-Comm	H0001036	COH MW Upgrade-South Point	33,371	52,651	63,880	12	-	15	-	2006	
95	G-Comm	H0001037	COH MW Upgrade-Ohia Mill	45,359	75,063	84,033	12	-	27	-	2006	
96	G-Comm	H0001038	COH MW Upgrade-Hill Plant	42,616	53,944	56,951	12	-	27	-	2006	
97	G-Comm	H0001063	Kan to Shipman Fiber	104,699	284,042	99,817						30
98	G-Comm	H0001195	MW Radio Repl-Kaumana - Puna	143,386	138,808	105,418	12	-	14	-	2006	
99	G-Comm	H0001294	Orchid Direct Transfer Trip	2,986	2,986							
100	G-Comm	H0001356	Radio Console Upgrade	83,598	93,340	88,655	9	-	14	-	2006	
101	G-Comm	H0001364	Hilo to Kaumana MW Upgrade	202,017	208,962	85,875	12	-	14	-	2006	
102	G-Comm	H0001367	Router Upgrade	93,661	-							
103	G-Comm	H0001373	Keahole SS Mobile Base	61,194	-							3
104	G-Comm	H0001375	N Kohala Fiber Loop	210,589	-							
105	G-Comm	H0001378	Kailua to Kahaluu MW Upgrade	167,295	136,664	130,959	8	-	10	-	2006	
106	G-Comm	H4800000	MINOR COMMUNICATIONS FAC	135,464	38,997	28,962						31
107	G-Comm	H4818000	Delta Mobile Radio	30,280	29,516	23,155						31
108	**G-Comm Total**			1,896,381								
109	G-Furn	H0000334	Energy Svcs Ofc Furniture	2,236	2,236							
110	G-Furn	H0001414	Office Furn & Equip	5,591	-							
111	G-Furn	H5101000	CUST SVC DEPT OFFICE FURN	6,709	6,709							
112	G-Furn	H5102000	ACCTG DEPT OFFICE FURNIT	4,373	2,901	(99)						31
113	G-Furn	H5103000	ENGR DEPT OFFICE FURNIT	7,222	15,218	14,003						31
114	G-Furn	H5104000	DISTR DEPT OFFICE FURNIT	11,147	5,903	1,405						31
115	G-Furn	H5105000	PROD DEPT OFFICE FURNIT		5,993	5,993						31
116	G-Furn	H5106000	ADMIN DEPT OFFICE FURNIT	16,772	-							
117	**G-Furn Total**			54,049								
118	G-Info Sys	H0000188	Prod Dept PC Purchase	42,488	15,062	19,429						31
119	G-Info Sys	H0000335	Energy Svcs PC Purchase	17,992	10,541	14,238						31
120	G-Info Sys	H0000462	HELCO Lan/Wan	44,924	133,127	99,407						31
121	G-Info Sys	H0000469	Computer Purchase-Admin	11,181	8,945	9,389						31
122	G-Info Sys	H0000941	Customer Info System Repl		-							
123	G-Info Sys	H0001131	Distribution PC Purchases	59,647	2,503	6,855						31
124	G-Info Sys	H0001148	Kanoelehua Operations Center Server	20,000	12,356	12,356	8	-	14	-	2006	
125	G-Info Sys	H0001409	Equipment for CBT	60,000	7,871	6,130						31
126	G-Info Sys	H0001416	Computer Upgrades	3,354	2,997	2,995						31
127	G-Info Sys	H5125000	ACCTG DEPT PC PURCHASE	8,746	12,000	-						
128	G-Info Sys	H5126000	ENGR DEPT PC PURCHASE	33,693	16,579	9,246						31
129	G-Info Sys	H5129000	CUST SVC PC PURCHASE	23,582	3,288	3,288						31
130	**G-Info Sys Total**			325,608								
131	G-S&I	H0000672	Main Ofc Bldg Improvements		(1)		12	-	29	-	2004	
132	G-S&I	H0000678	Security Building and Facili	150,000	195,000	141,118						31
133	G-S&I	H0000682	Dispatch Area Modify	30,000	20,647							
134	G-S&I	H0001171	Pave Kona Baseyard	63,000	63,000	63,000	12	-	20	-	2006	
135	G-S&I	H0001172	Kona Fire Sprinkler System	255,000	200,000							
136	G-S&I	H0001173	Pave Waimea Parking Area	5,850	5,850							
137	G-S&I	H0001174	Pave Backyard Waimea	15,525	4,121							
138	G-S&I	H0001175	Convert Production Warehouse	50,000	-							
139	G-S&I	H0001176	Enclosed Office Tsf Shop	15,000	15,000	13,414	9	-	1	-	2006	
140	G-S&I	H0001181	Waimea Emergency Generator	90,000	90,000	54,022						31
141	G-S&I	H0001182	Building 6 Structure Upgrade	51,000	20,000							
142	G-S&I	H0001350	30 day PCB Storage Area Hilo									
143	G-S&I	H0001351	Technical Roof Extension	-								
144	G-S&I	H0001357	Kanoelehua Camera System Upgrade	273	-							
145	G-S&I	H0001412	Safety Office Renovation	15,000	15,000	16,525	12	-	20	-	2006	
146	G-S&I	H4900000	MINOR GENERAL PLANT	61,435	43,409	10,215						31
147	**G-S&I Total**			802,083								
148	G-T&E	H0000229	PC Tools	5,381	5,381							
149	G-T&E	H0000295	Engr CADD Wrkstation Kona	16,218	28,777	33,906						31
150	G-T&E	H0000296	Engr CADD Wrkstation Hilo	33,693	60,744	68,595						31
151	G-T&E	H0000333	Energy Svcs Tools & Equip	6,709	374	374						31
152	G-T&E	H0000532	AED Program - Equip Purchase	13,417	-							
153	G-T&E	H0000615	Replace UST-Kailua	300,500								
154	G-T&E	H0000924	Field Service Handhelds	190,077	-							

Hawaii Electric Light Company, Inc.
2006 PLANT ADDITIONS
UPDATES

	A	B	C	D	E	F	G					H
	Function	Proj No	Project Description	WP-1401 2006 Plant Additions	CA-427/447 2006 Plant Additions	UPDATED 2006 PLANT ADDITIONS[32]	Current Plant Addition Date[25]					Notes
155	G-T&E	H0001141	Crimp Tools	9,718	9,718	9,718	12	-	26	-	2006	
156	G-T&E	H0001167	G-Tech Upgrade to FRAMME	142,819	-							
157	G-T&E	H0001169	West HI Sub Trailer	43,344	43,326	33,198	12	-	26	-	2006	
158	G-T&E	H0001228	PV Replacements		0							
159	G-T&E	H0001344	UPS Upgd Hilo Base Yard	2,118	40,887	40,887	7	-	14	-	2006	
160	G-T&E	H0001347	Three phase recording voltmeter		31,380	9,145	12	-	15	-	2006	
161	G-T&E	H0001348	Single phase Recording voltmeter		43,554	43,554	12	-	15	-	2006	
162	G-T&E	H0001349	Power Factor Test Set		45,472	45,472	12	-	19	-	2006	
163	G-T&E	H0001354	mini mobile sub	51,325	50,013	33,056	12	-	26	-	2006	
164	G-T&E	H0001384	Manlifts (2) for Hilo and Keahole	156,534	67,086							
165	G-T&E	H0001385	Maint Shop Drill Press	27,953	26,797	26,797	6	-	14	-	2006	
166	G-T&E	H0001407	Visitors Center		-							
167	G-T&E	H0001410	Electrical Hazard Simulator	7,827								
168	G-T&E	H0001411	Respirator Program-Equip	4,472								
169	G-T&E	H0001415	Records Management	23,480	20,992	18,476	12	-	28	-	2006	
170	G-T&E	H5000000	ACCTG DEPT TOOLS & EQUIP	3,280	449	449						31
171	G-T&E	H5002000	CUST SVC DEPT TOOLS & EQUIP	17,890	12,299	873						31
172	G-T&E	H5003000	ENGR DEPT TOOLS & EQUIP	9,348	11,452	2,594						31
173	G-T&E	H5004000	DISTR DEPT TOOLS & EQUIP	387,273	346,514	190,605						31
174	G-T&E	H5005000	ADMIN DEPT TOOLS & EQUIP	11,181	2,795							
175	**G-T&E Total**			1,464,556								
176	P-Land	H0000655	Keahole Land Rezoning	1,975,705	1,957,109	1,958,392	5	-	2	-	2006	
177	**P-Land Total**			1,975,705								
178	P-Other	H0000059	Lalamilo Tools & Equip	6,000	1,500							
179	P-Other	H0000509	CT2 Carbo Blast Modification (O&M)		-							10
180	P-Other	H0000679	Security Plants	250,000	213,414	142,673						31
181	P-Other	H0000932	Sheraton Keauhou Bay CHP		256,937							
182	P-Other	H0001158	CT-1 Low Smoke Fuel Nozzles (O&M)		-	-	12	-	5	-	2006	11
183	P-Other	H0001227	Customer Assistance Capital Projects									
184	P-Other	H0001256	Pier 3 Fuel Pipeline Repl	239,207	313,007	313,007	5	-	1	-	2006	
185	P-Other	H0001386	Keahole CT Sound Enclos	33,543								
186	P-Other	H0001388	Keahole Water Treatmnt HMI Replacement (O&M)									12
187	P-Other	H0001394	Kea CT-2 Governor Controls	630,000	1,263,381	1,286,356	11	-	28	-	2006	
188	P-Other	H3126000	Keahole CT4 Combustion Turbine	17,500	(594,242)	(594,242)						
189	P-Other	H3164000	Keahole CT5 Combustion Turbine	17,500	(934,516)	(934,516)						
190	P-Other	DHEINZ02	Keahole CT-2/4/5 Safety Barriers	100,000								
191	P-Other	DHEINZ03	Keahole Acoustic System	30,000								
192	P-Other	DHEINZ04	Keahole CT2 Black Start	250,000								
193	P-Other	DHEINZ06	Keahole Fire Alarm Connection	85,000								
194	P-Other	DHEINZ07	Keahole CT4/5 CO2 System Upgrade	30,000								
195	P-Other	H5001000	PROD DEPT TOOLS & EQUIP	82,142	81,596	112,104						31
196	**P-Other Total**			1,770,892								
197	P-Steam	H0000520	*Hill Plant Demineralizer*	700,000	700,000	598,467	12	-	15	-	2006	
198	P-Steam	H0000613	Puna Boiler Controls Upgrade	103,788	22,120							
199	P-Steam	H0000698	Predictive Maint Program		87,500							
200	P-Steam	H0000706	Puna Service Water System		2,263							
201	P-Steam	H0000863	Puna Day Tank Modification	66,830	66,830	66,830	8	-	2	-	2006	
202	P-Steam	H0000864	Puna Fan Enclosures	-	-							
203	P-Steam	H0000983	Shipman Controls-Fld Wiring		-							
204	P-Steam	H0001066	Puna Septic System	94,130	154,464	154,464	11	-	28	-	2006	
205	P-Steam	H0001102	Shipman PIG Station & Pumps	311,161	311,339	227,364	11	-	28	-	2006	
206	P-Steam	H0001135	Shipman Vibration Monitr Eqp	63,225	88,764	88,764	8	-	14	-	2006	
207	P-Steam	H0001147	Shipman Plant Lighting		-							
208	P-Steam	H0001149	Shipman Solid State Exciter	278,019	269,587	172,767	11	-	28	-	2006	
209	P-Steam	H0001151	Shipman Operator Enclosures	100,000	-							
210	P-Steam	H0001156	Hill 5 Asset Optimization		-							
211	P-Steam	H0001157	Hill 6 Asset Optimization		-							
212	P-Steam	H0001159	Ship 3 Asset Optimization		-							
213	P-Steam	H0001160	Ship 4 Asset Optimization		-							
214	P-Steam	H0001163	Puna Stm Turb Governr Replac	250,000	-							
215	P-Steam	H0001164	Puna Asset Optimization		-							
216	P-Steam	H0001330	Hill 5 Battery Bank	40,000	47,961	47,961	11	-	28	-	2006	
217	P-Steam	H0001387	Hill 6 Hydrogen Dryer and Control Panel (O&M)									13
218	P-Steam	H0001389	Pipeline Monitor	30,000	-							
219	P-Steam	H0001390	Hill 6 Blr Waterwall/Generating Retubing	1,077,257								
220	P-Steam	H0001391	Hill 6 Blr Condenser Retubing/Rebundling	250,000	-							
221	P-Steam	H0001392	Hill 6 Blr VFD Upgrades (O&M)									14
222	P-Steam	H0001393	Shipman Boiler Feed Pumps (cancel)									
223	P-Steam	H0001433	Shipman BFW Motors	170,000	170,000	167,483	12	-	20	-	2006	
224	P-Steam	DHEINZ01	Hill 5 Sootblower	50,000								5
225	P-Steam	DHEINZ26	Puna Drainage	70,000								
226	P-Steam	H1010000	POWER PLANT ADDITIONS	110,058	160,772	83,129						31
227	P-Steam	H1019000	MISC ENVIRON & OSHA PROJECTS	90,942	99,378	84,033						31
228	P-Steam	H1020000	POWER STATION ADDITIONS	89,760	121,054	160,709						31
229	P-Steam	H3196000	KEAHOLE 18MW ST ADDITION									
230	**P-Steam Total**			3,945,169								
231	T	H0000442	Palani Substation	1,332,262	-							24

Hawaii Electric Light Company, Inc.
2006 PLANT ADDITIONS
UPDATES

	A	B	C	D	E	F	G				H
	Function	Proj No	Project Description	WP-1401 2006 Plant Additions	CA-427/447 2006 Plant Additions	UPDATED 2006 PLANT ADDITIONS[32]	Current Plant Addition Date[25]				Notes
232	T	H0000443	Palani 69KV Drop	139,149	-						
233	T	H0000449	Waikoloa Pump Sub	1,002,482	1,007,065	1,229,073	12	-	22	- 2006	
234	T	H0000450	Waikoloa Pump 69KV	38,583	38,087	41,904	12	-	21	- 2006	
235	T	H0000451	Waikoloa Pump 12KV UG	64,493	57,977	43,436	12	-	27	- 2006	
236	T	H0000452	Waikoloa Well #6 OH 12KV	110,637	147,000	177,279	12	-	22	- 2006	
237	T	H0000454	HRD Switching Station	201,059	233,956	233,956	5	-	25	- 2006	
238	T	H0000650	Kukio 69KV UG Conversion		-						
239	T	H0000687	Substation Fencing	120,956	120,956	131,858					31
240	T	H0000725	Queen K-Kaiwi-Palani 69KV	1,642,669	1,920,932	1,707,174					22, 30
241	T	H0000784	Saddle Road Realign 69KV	118,366	-						
242	T	H0000801	Mamalahoa Hwy. Imp.		67,647	67,818	9	-	20	- 2006	
243	T	H0000919	Puna Sw Sta - Cir Switcher	161,199	43,832						
244	T	H0001004	RPR Reconductor 7200		-						
245	T	H0001047	Waimea-Ouli Recon. 7300 Line		-						
246	T	H0001051	CH KILAUEA CORRIDOR-SGNL	30,189	128,451	133,436	12	-	20	- 2006	
247	T	H0001104	Breaker Maintenance #2	52,396	-	-					
248	T	H0001187	Dist Relay Upgd-Line 6600	64,236	64,000	41,415	12	-	28	- 2006	
249	T	H0001188	Dist Relay Upgd-Pohoiki	35,194	41,371	40,176	11	-	28	- 2006	
250	T	H0001189	Dist Relay Upgd-Puna	51,407	51,000	18,397	12	-	19	- 2006	
251	T	H0000996	Apollo 69KV Line Drops	82,000							6
252	T	H0001203	Apollo Kamaoa Substation	124,970	-						7
253	T	H0001204	Apollo Kamaoa to S PT MW	233,659	-						8
254	T	H0001205	Apollo SCADA at Kamaoa	62,484	-						9
255	T	H0001207	Apollo Kilauea Relay Upgd	42,255	77,432	79,609	11	-	28	- 2006	
256	T	H0001208	Apollo Kealia Relay Upgd	42,255	90,924	91,112	11	-	28	- 2006	
257	T	H0001331	13.8KV Breakers in Kan Bldg	228,504	272,915	272,915	7	-	12	- 2006	
258	T	H0001353	KPF Switch Upgrades		46,834	75,189	12	-	21	- 2006	
259	T	H0001355	SPCC improvements	50,000	-						
260	T	H0001371	Waimea 7201 Breaker Repl	79,166	89,739	89,715	8	-	10	- 2006	
261	T	H0001372	Waimea 7301 Breaker Repl	79,166	133,198	84,491	9	-	1	- 2006	
262	T	H0001374	Kan SS 13KV Saf Imp	97,051	-						
263	T	H0001376	Kan Unit 2 Transf Repl	380,789	-						
264	T	H0001380	Keaumuku Station Service	118,286	157,123	152,177	12	-	12	- 2006	
265	T	H1011000	MINOR TRANS SUB ADDITIONS	32,584	27,978						
266	T	H1014000	MINOR TRANS LINE ADDITIONS	27,263	10,346	10,346					31
267	**T Total**			6,845,710							
268	T-Land	H0001381	HEP Switching Station Site	272,000							
269	T-Land	H0001382	Kamaoa Switching Station Site	143,000							
270	T-Land		Palani Substation Lot	129,122							
271	**T-Land Total**			544,122							
272	V	H0000331	Heavy Trucks	498,200	632,715	(863)					31
273	V	H0000548	Medium Trucks	420,000	463,244	179,670					31
274	**V**	H0000549	Sedans & Light Trucks	433,800	412,866	279,338					31
275	**V Total**			1,352,000							
276											
277	**Subtotal of Original HELCO-WP-1401 Projects**			**45,318,620**	**37,525,695**	**35,996,044**					
278											
279											
280	**NEW PROJECTS[26] (Funded by H0007000, H3521000, H0011000 & other sources)**										
281											
282	A	B	C	D	E	F	G				H
283				WP-1401	CA-427/447	UPDATED					
284	Function	Proj No	Project Description	2006 Plant Additions	2006 Plant Additions	2006 PLANT ADDITIONS[32]	Current Plant Addition Date[25]				Notes
285	Distribution - OH	H0001421	Neil Vieth		34,632	34,632	9	-	1	- 2006	
286	Distribution - OH	H0001422	Vim Patton		53,821	53,821	5	-	17	- 2006	
287	Distribution - OH	H0001430	Glenwood Farm Lots		155,000	160,491	10	-	24	- 2006	
288	Distribution - OH	H0001431	Joseph Magaldi		41,746	41,746	5	-	8	- 2006	
289	Distribution - OH	H0001432	Whitney, Vivian		44,549	44,549	6	-	9	- 2006	
290	Distribution - OH	H0001434	Peter Aickin		28,739	28,739	5	-	4	- 2006	
291	Distribution - OH	H0001435	Kikala Keokea Subdivision		330,455	402,859	11	-	24	- 2006	
292	Distribution - OH	H0001436	Haleili S/D		71,019	71,019	7	-	24	- 2006	
293	Distribution - OH	H0001439	Harris, Anthony & Fronda		28,069	28,069	11	-	24	- 2006	
294	Distribution - OH	H0001451	Puaono S/D - Increment II		38,196	38,198	5	-	8	- 2006	
295	Distribution - OH	H0001469	Deluz, Frank Jr		45,881	41,056	6	-	9	- 2006	
296	Distribution - OH	H0001478	St Ambrogio, Roberta		31,122	30,392	8	-	11	- 2006	
297	Distribution - OH	H0001480	Greer, David & Doris		33,969	38,010	12	-	1	- 2006	
298	Distribution - OH	H0001483	Deborah & Richard Ryken		92,666	92,666	9	-	1	- 2006	
299	Distribution - OH	H0001485	Orchards at Pepeekeo Ph 2		94,630	94,630	9	-	8	- 2006	
300	Distribution - OH	H0001486	Deluz-Campbell, Brenda		39,025	87,802	11	-	15	- 2006	
301	Transmission - Bulk	H0001463	Kealakaha Bridge Replacement		450,496	519,659					30
302			**Subtotal for Projects Funded by H0007000**		**1,614,013**	**1,808,338**					
303											
304	Distribution - OH	H0001423	SSPP 809 - Desouza		24,903	24,903	6	-	16	- 2006	
305	Distribution - OH	H0001424	SSPP 848 - Atkinson		21,211	21,211	6	-	22	- 2006	

Hawaii Electric Light Company, Inc.
2006 PLANT ADDITIONS
UPDATES

	A	B	C	D	E	F	G					H
	Function	Proj No	Project Description	WP-1401 2006 Plant Additions	CA-427/447 2006 Plant Additions	UPDATED 2006 PLANT ADDITIONS[32]	Current Plant Addition Date[25]					Notes
306	Distribution - OH	H0001425	SSPP 868 - Berkich		27,002	27,002	5	-	8	-	2006	
307	Distribution - OH	H0001426	SSPP 866 - Pua Mauka Dev		30,012	30,012	9	-	1	-	2006	
308	Distribution - OH	H0001427	SSPP 895 - Wolske		13,352	13,352	5	-	23	-	2006	
309	Distribution - OH	H0001428	SSPP 833 - Caldwell		51,376	51,376	5	-	9	-	2006	
310	Distribution - OH	H0001429	SSPP 894 - Randall		21,811	21,811	5	-	9	-	2006	
311	Distribution - OH	H0001437	SSPP Unit 857 - Alderdyce		25,547	25,547	11	-	24	-	2006	
312	Distribution - OH	H0001441	SSPP 905 - Pied		16,816	16,816	5	-	26	-	2006	
313	Distribution - OH	H0001447	SSPP Unit #890-Warren		75,951	44,455	9	-	20	-	2006	
314	Distribution - OH	H0001448	SSPP 808 - Dang		55,583	55,583	6	-	14	-	2006	
315	Distribution - OH	H0001449	SSPP Unit #884-Scarborough		30,049	30,049	6	-	1	-	2006	
316	Distribution - OH	H0001452	SSPP Unit #885 - Sieber		23,102	22,504	12	-	4	-	2006	
317	Distribution - OH	H0001464	SSPP 865 - Denson		20,323	20,323	9	-	11	-	2006	
318	Distribution - OH	H0001465	SSPP 871 - Jeanneault		15,472	25,747	9	-	11	-	2006	
319	Distribution - OH	H0001466	SSPP Unit #903 - Boyles		28,012	31,186	10	-	3	-	2006	
320	Distribution - OH	H0001476	SSPP 835 - Ortega		8,595	56,692	7	-	17	-	2006	
321	Distribution - OH	H0001481	SSPP 900 - Dickerson		31,069	31,069	7	-	21	-	2006	
322	Distribution - OH	H0001488	SSPP 908 Derkovich		31,000	27,686	9	-	20	-	2006	
323	Distribution - OH	H0001489	SSPP 922 Elmore		11,404	41,835	12	-	7	-	2006	
324	Distribution - OH	H0001491	SSPP Unit #911-Edelhertz		35,799	18,204	12	-	27	-	2006	
325	Distribution - OH	H0001492	SSPP 859 - Cabral		23,000	44,605	9	-	12	-	2006	
326	Distribution - OH	H0001494	SSPP Unit #877 - Thacher		29,764	17,692	11	-	24	-	2006	
327	Distribution - OH	H0001498	SSPP Unit #897 - Sherrell		21,104	18,977	11	-	24	-	2006	
328	Distribution - OH	H0001501	SSPP 904 Streich		20,314	20,314	9	-	21	-	2006	
329	Distribution - OH	H0001510	SSPP 875 Emeliano		71,000							
330	Distribution - OH	H0001533	SSPP 917 Meredith		30,000							
331	Distribution - OH	H0001534	SSPP 936 Lawler		17,000	33,855	12	-	5	-	2006	
332			**Subtotal for Projects Funded by H3521000**		**810,569**	**772,807**						
333												
334	Distribution - UG	H0001419	Parker Well #1		74,097	74,097	4	-	13	-	2006	
335	Distribution - UG	H0001420	Sunset Ridge PH. 3 Unit 3		157,623	157,623	5	-	2	-	2006	
336	Distribution - UG	H0001438	KEAHOLE HTS PH II		30,841	30,841	9	-	1	-	2006	
337	Distribution - UG	H0001442	Golf Villas		99,626	99,626	3	-	27	-	2006	
338	Distribution - UG	H0001443	Koyo USA 3		121,089	127,354	11	-	14	-	2006	
339	Distribution - UG	H0001444	Lokahi Makai-Phase 1		399,204	399,204	12	-	7	-	2006	
340	Distribution - UG	H0001445	Lokahi Makai-Phase 2		422,771	422,771	6	-	13	-	2006	
341	Distribution - UG	H0001450	Hapuu-Kapanaia S/D		49,808	49,808	5	-	22	-	2006	
342	Distribution - UG	H0001453	Kulalani		79,560	79,560	7	-	10	-	2006	
343	Distribution - UG	H0001462	Alii Cove		160,435	160,435	6	-	1	-	2006	
344	Distribution - UG	H0001470	Hualalai Parcel 10B & 13 S/D		534,773	585,043	11	-	15	-	2006	
345	Distribution - UG	H0001471	Hainoa Villas Parcel 7B		68,737	68,737	6	-	1	-	2006	
346	Distribution - UG	H0001477	Pualani Estates S/D Phase 2		421,626	690,098	11	-	15	-	2006	
347	Distribution - UG	H0001455	Waikoloa Bch Villas PH II		57,456	44,432	10	-	31	-	2006	
348			**Subtotal for Projects Funded by H0011000**		**2,677,644**	**2,989,627**						
349												
350	Communications	H0001454	Keahole SS Base Station		58,702	42,369	11	-	22	-	2006	4
351	Distribution - OH	H0001340	Ram, Jay		63,475	63,475	2	-	27	-	2006	
352	Distribution - OH	H0001490	Volcano Golf & Country Club		53,273	40,562	9	-	5	-	2006	
353	Distribution - OH	H0001497	RPL Shoemaker		36,738							
354	Distribution - OH	H0001502	Honolii Ridge Inc. 1		22,648							
355	Distribution - OH	H0001503	Geiger, Dwight & Eileen		28,739	42,897	10	-	23	-	2006	
356	Distribution - OH	H0001504	Mitsuda, Jon & Melissa		30,590	29,294	12	-	7	-	2006	
357	Distribution - OH	H0001512	Charlie L. Erck		37,035	26,924	11	-	13	-	2006	
358	Distribution - OH	H0001513	Tim DeLozier		60,018	41,106	11	-	17	-	2006	
359	Distribution - OH	H0001516	Dilworth, Gregory L.		34,698	25,992	12	-	4	-	2006	
360	Distribution - OH	H0001517	Karl Nobriga		33,847	29,099	12	-	12	-	2006	
361	Distribution - OH	H0001518	Island Ohana Dental		53,397							
362	Distribution - OH	H0001519	Kahakai Place PUD		40,000	49,844	12	-	13	-	2006	
363	Distribution - OH	H0001522	PUAKEA RANCH SUBDIVISION		163,000	109,573	12	-	14	-	2006	
364	Distribution - OH	H0001523	KING SUBDIVISION		42,781							
365	Distribution - OH	H0001530	RPL Secondary Komohana St.		26,047	21,326	12	-	27	-	2006	
366	Distribution - OH	H0001536	Ranch @ Puakea OH		50,241	48,963	12	-	14	-	2006	
367	Distribution - UG	DDemic09	COH Waikaloa Comfort Sttn		81,914							
368	Distribution - UG	H0001284	Puuepa Ranch Subd		193,209	193,209	2	-	8	-	2006	
369	Distribution - UG	H0001417	Hanaula Subd		62,000	61,465	11	-	28	-	2006	
370	Distribution - UG	H0001418	Kikaha @ Wehilani		484,474	510,670	11	-	30	-	2006	
371	Distribution - UG	H0001473	Hualalai parcel 16B Subdvn		170,101	202,179	12	-	7	-	2006	
372	Distribution - UG	H0001474	Hualalai Heights S/D		61,044	61,044	5	-	19	-	2006	
373	Distribution - UG	H0001475	Waiulaula		256,231	256,231	7	-	25	-	2006	
374	Distribution - UG	H0001482	Alii Heights Unit 2 Phase 4		21,944	72,319	8	-	1	-	2006	
375	Distribution - UG	H0001484	Maniniowali S/D Ph.2		388,286	451,212	12	-	13	-	2006	
376	Distribution - UG	H0001487	Volcano Golf - Unit V-UG		68,461							
377	Distribution - UG	H0001495	Makana Kai @ Wehilani		95,489	95,489	8	-	24	-	2006	
378	Distribution - UG	H0001496	Waimea Parkside PUD		51,940	50,355	9	-	22	-	2006	
379	Distribution - UG	H0001499	Hua'aina S/D		22,745	20,178	9	-	5	-	2006	
380	Distribution - UG	H0001500	Alii Heights Unit 2 Ph 5 S/D		79,102	78,661	10	-	27	-	2006	
381	Distribution - UG	H0001508	Kailine Subdivision		25,281							
382	Distribution - UG	H0001509	Koyanagi S/D		24,000	19,302	9	-	11	-	2006	

Hawaii Electric Light Company, Inc.
2006 PLANT ADDITIONS
UPDATES

	A	B	C	D	E	F	G					H
	Function	Proj No	Project Description	WP-1401 2006 Plant Additions	CA-427/447 2006 Plant Additions	UPDATED 2006 PLANT ADDITIONS[32]	Current Plant Addition Date[25]					Notes
383	Distribution - UG	H0001514	Sugarcane Lane S/D		28,000	26,384	12	-	22	-	2006	
384	Distribution - UG	H0001515	Feeney S/D		31,000	17,890	10	-	20	-	2006	
385	Distribution - UG	H0001520	Matsuyama Store		29,330	19,313	12	-	7	-	2006	
386	Distribution - UG	H0001521	SENA S/D		42,589							
387	Distribution - UG	H0001524	O'OMA PLANTATION		63,398	36,680	12	-	7	-	2006	
388	Distribution - UG	H0001535	Upland @ Kaohe S/D		49,000	66,632	12	-	22	-	2006	
389	Distribution - UG	H0001537	Ranch @ Puakea UG		58,788							
390	Distribution - UG	H0001539	Kaupulehu Irr Well #6		57,210	69,313	12	-	20	-	2006	
391	Distribution - UG	H0001540	Waikoloa Comfort Sta			39,258	12	-	5	-	2006	
392	Distribution - UG	H0001544	Enzamin			33,941	12	-	26	-	2006	
393	Distribution - UG	H0001545	Mauna Lani Site K			42,692	12	-	26	-	2006	
394	Distribution - UG	RBalte21	Fairways UG		47,260							
395	Distribution - UG	RBalte25	Mohala UG		28,387							
396	Furniture & Office Equipt	H0001032	Acct'g PC Replacements			12,413						31
397	General Plant	H0001511	Kona Carpet		10,246							
398	Production - Non-Steam	H0001153	CT4 Governor Control Upgrade		202,526	189,485	8	-	11	-	2006	
399	Production - Non-Steam	H0001456	Maint Shop Bridge Crane		75,000	55,587	12	-	14	-	2006	
400	Production - Non-Steam	H0001458	Keahole Fire Alarm Connectn		89,558	77,237	10	-	19	-	2006	
401	Production - Steam	H0001446	Puna Yard Drainage		70,000	78,881	12	-	20	-	2006	
402	Tools & Equipment	H0001168	Battery Compression Tools		30,093	30,093						31
403	Tools & Equipment	H0001346	AED Program - Equip Purchase		12,578	12,578						31
404	Tools & Equipment	H0001493	7KVA UPS Upgd Hilo Base Yard		36,470	19,159	12	-	14	-	2006	
405	Tools & Equipment	H0001526	SF6 Analyzer		34,441	23,421	12	-	28	-	2006	
406	Tools & Equipment	H0001527	SF6 Gas Reclaimer		22,961	19,165	12	-	28	-	2006	
407	Tools & Equipment	H0001528	SAFETY TOOLS		49,915	57,379						31
408	Tools & Equipment	H0001531	Respirator Program - Equip		19,679	17,902						31
409	Tools & Equipment	H0001532	Multi-Gas Docking Station		4,920	5,149						31
410	Transmission - Bulk	H0000704	Kuakini 69/12KV Relocation		56,780	56,780	11	-	16	-	2006	
411	Transmission - Sub	H0001472	CB7602 Replacement		90,328	74,051	9	-	18	-	2006	
412	Transmission - Sub	H0001479	Laupahoehoe Transformer		107,000							
413	Transmission - Sub	H0001542	Puna CB3401 Replacement			65,479	12	-	13	-	2006	
414			**Subtotal for Projects Funded by Other Sources**		**4,268,909**	**3,790,596**						
415												
416	**Subtotal of New Projects (sum of rows 302, 332, 348, & 414)**				**9,371,136**	**9,361,369**						
417												
418												
419	**CARRYOVER PROJECTS[27]**											
420												
421	A	B	C	D	E	F	G					H
422				WP-1401 2006 Plant Additions	CA-427/447 2006 Plant Additions	UPDATED 2006 PLANT ADDITIONS[32]	Current Plant Addition Date[25]					
423	Function	Proj No	Project Description									Notes
424	Communications	H0000848	Kaloko Sub UFR & Supy		1,484	299	11	-	4	-	2005	
425	Distribution - OH	H0000106	Kaloko Business Park		3,250	3,250	11	-	1	-	1999	
426	Distribution - OH	H0000342	Hokulia PH1		(2,734)	(1,500)	9	-	2	-	2005	
427	Distribution - OH	H0000550	McClean Properties S/D		56	-	8	-	30	-	2001	
428	Distribution - OH	H0000633	SSPP Unit-639 Olivera		(6,422)	(6,422)	12	-	26	-	2003	
429	Distribution - OH	H0000759	Royal Hawaiian Sub Upgrade		(163)	(163)	8	-	25	-	2004	
430	Distribution - OH	H0001022	RPL Haina Mill Camp		531	531	8	-	17	-	2004	
431	Distribution - OH	H0001117	Hualalai Hts - Offsite Imp		109	-	3	-	8	-	2005	
432	Distribution - OH	H0001134	THY DEV LLC-KAAPAHU		3,190	3,190	9	-	21	-	2005	
433	Distribution - OH	H0001273	SSPP 724-New Zealand		28,584	28,584	12	-	21	-	2005	
434	Distribution - OH	H0001300	Al Muro		773	773	12	-	17	-	2005	
435	Distribution - OH	H0001305	Alii Heights Unt 2 Ph 2 OH		40,180	40,180	9	-	26	-	2005	
436	Distribution - OH	H0001307	SSPP 839 - Tani		37,682	37,682	11	-	21	-	2005	
437	Distribution - OH	H0001312	SSPP 850 - Mathes		3,721	3,721	12	-	19	-	2005	
438	Distribution - OH	H0001341	Thomas Woods		10,466	10,466	12	-	5	-	2005	
439	Distribution - OH	H0001343	SSPP838 - SUGRUE		1,740	1,740	12	-	22	-	2005	
440	Distribution - OH	H3501000	CHRISTOPHER NORRIE		48	-	5	-	21	-	1999	
441	Distribution - UG	H0000386	State Office Building 2		394	14	5	-	11	-	2001	
442	Distribution - UG	H0000648	RPL Kona (Palisades)		40,939	40,939	12	-	21	-	2005	
443	Distribution - UG	H0001058	KUKIO S/D PH III		(133)	(133)	8	-	15	-	2005	
444	Distribution - UG	H0001071	Anaehoomalu Xfmr Fan Add		92	92	12	-	27	-	2005	
445	Distribution - UG	H0001081	Keauhou Heights S/D		600	-	9	-	25	-	2004	
446	Distribution - UG	H0001112	HUALALAI PARCEL 9 S/D		(33)	(33)	3	-	25	-	2005	
447	Distribution - UG	H0001121	RPL Pri Melomelo St		8,048	8,048	12	-	20	-	2005	
448	Distribution - UG	H0001232	Maniniowali S/D Ph1A		92	92	11	-	1	-	2005	
449	Distribution - UG	H0001244	Keahuolu 12kV UG		82,472	82,472	12	-	21	-	2005	
450	Distribution - UG	H0001266	Maniniowali		663	663	8	-	15	-	2005	
451	Distribution - UG	H0001296	Kukio Ph III Increment 2 S/D		37,101	37,101	10	-	24	-	2005	
452	Distribution - UG	H0001306	Alii Heights Unt 2 Ph 2 UG		40,838	40,838	10	-	1	-	2005	
453	Distribution - UG	H0001308	Lualai S/D Ph 2A			27,564	9	-	28	-	2005	
454	Distribution - UG	H0001319	Alii Heights Unit 2 Ph 3 S/D		70,148	70,148	12	-	23	-	2005	
455	Distribution - UG	H0001327	Hakalau Plantation Vg UG		(446)	(446)	12	-	30	-	2005	
456	Distribution - UG	H0001336	Hilton Waikoloa Bay Club 2		90,728	90,728	11	-	15	-	2005	

Hawaii Electric Light Company, Inc.
2006 PLANT ADDITIONS
UPDATES

	A	B	C	D	E	F	G					H
	Function	Proj No	Project Description	WP-1401 2006 Plant Additions	CA-427/447 2006 Plant Additions	UPDATED 2006 PLANT ADDITIONS[32]	Current Plant Addition Date[25]					Notes
457	Distribution - UG	H0001337	Sunset Ridge PH 3 Unit 2		90,435	90,435	11	-	29	-	2005	
458	Distribution - UG	H0001345	WAIKOLOA BEACH VILLAS PH1		55,238	55,238	12	-	29	-	2005	
459	General Plant	H0000274	Main Office AC Improvement		(22,419)	(22,419)	3	-	18	-	2002	
460	General Plant	H0000283	Holualoa Substation Lot		64,399		12	-	12	-	2000	
461	General Plant	H0000497	Kona Baseyard-Eng Bldg		36,382	36,382	12	-	15	-	2005	
462	General Plant	H0001140	SCADA Platform Upgrade		9,133	9,133	9	-	15	-	2005	
463	Production - Non-Steam	H0000850	Puueo Hydro		203,782	203,782	7	-	28	-	2005	
464	Production - Non-Steam	H0001040	Keahole Tank Farm Drainage		55,521	55,521	11	-	23	-	2005	
465	Production - Non-Steam	H0001062	CT-2 Noise Mitigation		18,215	18,215	9	-	14	-	2005	
466	Production - Non-Steam	H0001152	CT3 Governor Control Upgrade		(54)	(54)	12	-	1	-	2005	
467	Production - Non-Steam	H0001154	CT5 Governor Control Upgrade		(161,804)	(316,145)	11	-	18	-	2005	
468	Production - Non-Steam	H0001165	Waiau Hydro Exciter&Controls		(85,451)	(230,224)	12	-	21	-	2005	
469	Production - Steam	H0000527	Hill Septic System			3,920	4	-	13	-	2005	
470	Production - Steam	H0000576	Puna Boiler Ash System		6,498	-	12	-	22	-	2003	
471	Production - Steam	H0000879	Shipman 4 Boiler Tube Repl		906	906	7	-	26	-	2005	
472	Production - Steam	H0001082	Hill WWT System Auto Upgrade		8,292	8,292	10	-	17	-	2005	
473	Tools & Equipment	H0000763	Offgrid PV Lights		(7)	(7)	12	-	12	-	2003	
474	Tools & Equipment	H0001024	Keahole AQ Monitor		1,193	-	12	-	27	-	2004	
475	Transmission - Bulk	H0000445	Poopoomino #2 Tsf		27,407	27,407	12	-	15	-	2005	
476	Transmission - Bulk	H0000453	HRD 34 kV Line & Drop		268,216	268,216	12	-	28	-	2005	
477	Transmission - Bulk	H0001050	CH KINOOLE CORRIDOR-SGNL			(632)	10	-	8	-	2004	
478	Transmission - Sub	H0001120	Kuakini Unit Sub 2		177,822	177,822	12	-	29	-	2005	
479	Transmission - Sub	H0001142	Keahuolu Sub		1,503	1,503	11	-	10	-	2005	
480	Transmission - Sub	H0001243	Keahuolu 69kV Drop & 12kV OH		10,549	10,549	12	-	21	-	2005	
481	Transmission - Sub	H0001271	Keamuku CB6802 Replacement		4,689	4,689	11	-	29	-	2005	
482												
483	**Subtotal of Carryover Projects**				**1,264,443**	**922,946**						
484												
485												
486	**KEAHOLE PROJECTS[28]**											
487												
488	A	B	C	D	E	F	G					H
489				WP-1401 2006 Plant Additions	CA-427/447 2006 Plant Additions	UPDATED 2006 PLANT ADDITIONS[32]	Current Plant Addition Date[25]					
490	Function	Proj No	Project Description									Notes
491	Production - Non-Steam	H0000413	Kea Warehouse/Shop Bldg-PSD		(233,244)	(233,244)	5	-	25	-	2004	
492	Production - Non-Steam	H0000414	Kea Water Treatmt Sys-PSD-CT4		1,360,854	1,360,854	8	-	31	-	2004	
493	Production - Non-Steam	H0000415	Kea Water Treatmt Sys-PSD-CT5		(106,343)	(106,343)	8	-	31	-	2004	
494	Production - Non-Steam	H3147000	FUEL SYSTEM		3,581	3,581	8	-	31	-	2004	
495	Production - Non-Steam	H3166000	FUEL SYSTEM		(330)	(330)	8	-	31	-	2004	
496	Tools & Equipment	H0000416	Kea Fire Protect Sys-PSD		145,200	145,200	6	-	30	-	2004	
497	Transmission - Bulk	H3303000	KEAHOLE CT4 SW STN ADD		299,878	299,878	5	-	25	-	2004	
498	Transmission - Bulk	H3304000	KEAHOLE 20MW CT5 SW STN ADD		(20,867)	(20,867)	6	-	30	-	2004	
499												
500	**Subtotal of Keahole Projects**				**1,448,728**	**1,448,728**						
501	**Sum of Keahole Projects Listed in the Original HELCO-WP-1401 - H3126000 (row 188) & H3164000 (row 189)**				**(1,528,758)**	**(1,528,758)**						
502			**Overall Balance for Keahole Projects (Sum of rows 500 & 501)**		**(80,030)**	**(80,030)**						29
503												
504	**GRAND TOTAL OF ALL PLANT ADDITION PROJECTS (Sum of rows 277, 416, 483, & 500)**			**45,318,620**	**49,610,002**	**47,729,087**						

Notes

1	H0000933	Identified in CA-IR-371 with $0 plant addition for 2006
2	H0000730	Identified in CA-IR-371 with $11,861.31 plant addition for 2006
3	H0001373	Identified in CA-IR-371 with $0 plant addition for 2006
4	H0001454	Identified in CA-IR-371 with $52,140 plant addition for 2006
5	DHEINZ01	Identified in CA-IR-372 as moving out of the 2006 test year
6	H0000996	Identified in CA-IR-372 as moving out of the 2006 test year
7	H0001203	Identified in CA-IR-372 as moving out of the 2006 test year
8	H0001204	Identified in CA-IR-372 as moving out of the 2006 test year
9	H0001205	Identified in CA-IR-372 as moving out of the 2006 test year
10	H0000509	Identified in CA-IR-373 as an O&M project
11	H0001158	Identified in CA-IR-373 as an O&M project
12	H0001388	Identified in CA-IR-373 as an O&M project
13	H0001387	Identified in CA-IR-373 as an O&M project
14	H0001392	Identified in CA-IR-373 as an O&M project
15	H1001000	Identified in CA-IR-375 with $581,000 plant addition for 2006
16	H1002000	Identified in CA-IR-375 with $4,012,139 plant addition & in CA-IR-476 with $4,112,139 plant addition for 2006
17	H1000000	Identified in CA-IR-375 with $1,862,918 plant addition for 2006
18	H1003000	Identified in CA-IR-375 with $1,484,138 plant addition for 2006
19	H1006000	Identified in CA-IR-375 with $2,437,909 plant addition for 2006
20	H1008000	Identified in CA-IR-375 with $1,941,866 plant addition for 2006
21	H1017000	Identified in CA-IR-375 with $1,732,402 plant addition for 2006
22	H0000725	Identified in CA-IR-426 with $1,734,906 plant addition for 2006

Hawaii Electric Light Company, Inc.
2006 PLANT ADDITIONS
UPDATES

A	B	C	D	E	F	G	H
Function	Proj No	Project Description	WP-1401 2006 Plant Additions	CA-427/447 2006 Plant Additions	UPDATED 2006 PLANT ADDITIONS[32]	Current Plant Addition Date[25]	Notes
23	H0001360	Identified in CA-IR-431 with $683,941 plant addition for 2006					
24	H0000442	Identified in CA-IR-498 & 499 as moving out of the 2006 test year					
Notes Continued							
25	Actual Plant Addition Dates are as of 1/9/07 records						
26	Funding for new projects was transferred from H0007000 (Unforeseeable OH Cust Request), H3521000 (SSPP Requests), H0011000 (Unforeseeable UG Cust Request), or other projects						
27	Projects completed in a prior year and not identified in the Original HELCO-WP-1401						
28	Projects associated Keahole CT-4 & CT-5						
29	As stated in CA-IR-447 (T-15)						
30	Project that is partially closed because a portion was used & useful						
31	Blanket projects which are dated in service at the work order level						
32	Preliminary plant addition activity as of 12/31/06 provided by Accounting Dept.						

Hawaii Electric Light Company, Inc.
LISTING OF ERRORS AND OMISSIONS

Item #	CA-IR	Att #	Description	Error	Corrected Information[1]	Current Information[2]	Adj. Based on Current Info.		Rate Base Adj. Based on Current Info. Beg Balance	End Balance	Average Balance	
1	180	2	Plant Add - H0000700 (entry error)		256,360	213,183	213,183			213,183	106,592	
2	180	2	Plant Add - H0001063 (partial budget)	104,699	231,982	99,817	(4,882)			(4,882)	(2,441)	
3	180	2	Plant Add - H0001203 (scheduled for 2007)	124,970	0	0	(124,970)			(124,970)	(62,485)	
4	180	2	Plant Add - H0001204 (scheduled for 2007)	233,659	0	0	(233,659)			(233,659)	(116,830)	
5	181	1	Plant Add Date - Apollo 69KV Drops	2006	2007	2007				(82,000)	(41,000)	7
6	181	1	Plant Add Date - H0001203	2006	2007	2007		4			-	
7	181	1	Plant Add Date - H0001204	2006	2007	2007		4			-	
8	181	1	Plant Add Date - H0001205	2006	2007	2007		4			-	
9	368		O&M Budget - ICB-PYA Misc Eng Svcs	38,300	0	0	(38,300)			105	52	6
10	368		O&M Budget - ICB-PYA Plng O&M Engr	25,100	0	0	(25,100)			69	34	6
11	371		Plant Add - H0000933 (completed 2005)	84,730	0	0	(84,730)			(84,730)	(42,365)	
12	371		Plant Add - H0000730 (updated cost)	15,595	11,861	11,861	(3,734)			(3,734)	(1,867)	
13	371		Plant Add - H0001373 (closed)	61,194	0	0	(61,194)			(61,194)	(30,597)	
14	371		Plant Add - H0001454 (replace H0001373)		52,140	42,369	42,369			42,369	21,185	
15	372		Plant Add - H0001203 (scheduled for 2007)	124,970	0	0		4			-	
16	372		Plant Add - H0001204 (scheduled for 2007)	233,659	0	0		4			-	
17	372		Plant Add - H0001205 (scheduled for 2007)	62,484	0	0	(62,484)			(62,484)	(31,242)	
18	379		Advance - H0000442	1,259,562	1,089,505	108,950	108,950	3,5		(108,950)	(54,475)	
19	379		Advance - H0000443	149,000	90,929	9,096	9,096	3,5		(9,096)	(4,548)	
20	379		Advance - H0000444	80,000	0	0	0	5		-	-	
21	379	3	CIAC - H0000444		79,128	7,910	7,910	3		(7,910)	(3,955)	
22	380		Other Types of Payments - H0000449	100,000	0	0	0	5		-	-	
23	425		In-Kind Contributions - H0000725	11,593	24,956	0	(11,593)			11,593	5,797	
24	426		In-Kind Contributions - H0000725	26,040	24,956	0	0	5		-	-	
25	426		CIAC - H0000725		488,479	0	0			-	-	
26	426		Cost Sharing - H0000725	47,900	0	0	0	5		-	-	
27	431		In-Kind Contribution - H0001360		240,000	239,638	239,638	3		(239,638)	(119,819)	
28	431		Cost Sharing - H0001360	705,000	0	0	0	5		-	-	
29	431		CIAC - H0001360		564,962	0	0			-	-	
30	432		Advance - H0001368		361,991	361,991	361,991	3		(361,991)	(180,996)	
31	447	1409C	CIAC - H0001368		60,490	48,392	48,392	3		(48,392)	(24,196)	
						Cumulative rate base decrease					(583,156)	

Notes
1 Information presented in CA-IR-448 Attachment 1. Source is November's PILLAR data as of 11/9/06
2 Based on preliminary 2006 activity as of 12/31/06. Source is Accounting Dept. reports.
3 Amount collected in 2006
4 These projects are also listed as Item #3, 4 and 17. In order to avoid double counting the rate base impact it will not be presented here.
5 Amounts listed in the "Error" column were included in the respective "Project Identification Form" which were submitted in response to CA-IR-182. Amounts were not included as test year contributions or advances therefore were not included as deductions to rate base in direct testimony.
6 See page 2 of Attachment.
7 $82,000 was included as a test year plant addition for this project as identified in HELCO WP-1401.

Hawaii Electric Light Company, Inc.
WORKING CASH

	(A) Net Collection Lag (Days)	(B) Correction Amount	(C) Average Daily Amount - Present (B) / 365	(D) Working Cash Required (Provided) under Present Rates (A) x (C)	(E) Average Daily Amount - Proposed (B) / 365	(F) Working Cash Required (Provided) under Proposed Rates (A) x (E)
	HELCO-1606	ATT. 1, p.1				
O&M Nonlabor	(1)	(38,300)	(105)	105	(105)	105
	(1)	(25,100)	(69)	69	(69)	69
Total WORKING CASH				174		174
Change in WORKING CASH						0

Hawaii Electric Light Company, Inc.

Test Year 2006

SUMMARY OF SPECIFIC PROJECTS
CONTRIBUTIONS IN AID OF CONSTRUCTION
($ THOUSANDS)

	A	B	C	D
Line	Project/ Budget Item	Description	*Original* Estimated Contributions	*Amount* Collected in 2006[1]
1	H0007000	Customer Request Projects	18.7	
2	U1-0011	Unforseeable UG Cust Request	638.9	
3	H0001435	Kikala Keokea S/D	327.8	
4	H0001436	Haleili S/D	1.1	
5	H0001418	Kikaha @ Wehilani	389.8	108.5
6	H0001329	Waikoloa Beach Marriott	80.3	
7	H0001419	Parker Well #1	29.7	29.8
8	H0001203	Apollo Kamaoa Substation	125.0	
9	H0000996	Apollo 69KV Line Drops	82.0	
10	H0001204	Apollo Kamaoa to PT MW	233.7	
11	H0001205	Apollo SCADA at Kamaoa	62.5	
12	H0001207	Apollo Kilauea Relay Upgrade	42.3	
13	H0001208	Apollo Kealia Relay Upgrade	42.3	
		Total	*$ 2,074.1*	*$ 138.3*
NEW PROJECTS				
14	H0000444	Palani 12KV UG		7.9
15	H0001368	Kaloko Unit #2 Transf		48.4
16	H0001517	Karl Nobriga		
17	H0001518	Island Ohana Dental		14.9
18	H0000705	Queen K-Kaiwi-Palani 69KV		
19	H0001360	Kuakini Distr & Svcs		
20	H0001438	Keahole heights Ph II S/D		8.3
21	H0001442	Golf Villas-LE		48.0
22	H0001444	Lokahi Makai S/D-Phase I		
23	H0001445	Lokahi Makai S/D-Phase II		
24	H0001443	KOYO USA 3		40.1
25	H0001453	Kulalani at Mauna Lani		51.0
26	H0001455	Waikoloa Beach Villas Ph II		
27	H0001462	Alii Cove		
28	*H0001470*	*Hualalai Parcel 10B & 13 S/D*		*262.1*
29	H0001471	Hainoa Villas Parcel 7B		31.1
30	H0001473	Hualalai Parcel 16B Subdvn		104.8
31	H0001477	Pualani Estates Subdn Phase 2		86.1
32	H0001482	Alii Heights S/D Unit 2 PH 4		0.3
33	H0001484	Maniniowali S/D Ph. 2		219.0
34	H0001500	Alii Heights Unit 2 Ph 5 S/D		
35	H0001502	Honolii Ridge Inc. 1		4.8
36	H0001509	Koyanagi S/D		0.1
37	H0001520	Matsuyama Store		16.1
38	H0001515	Feeney S/D		15.2
39	H0001540	Waikoloa Park Comfort Station		25.6
40	H0000725	Queen K-Kaiwi-Palani 69KV		
41	H0001463	Kealakaha Bridge Replacement		
42	H0001541	Kona Vista S/D Unit II		122.6
43	H0001548	Lokahi Makai Phase 4-UG		9.7
		Total	$ -	$ 1,115.9
		Grand Total	$ 2,074.1	$ 1,254.2

Notes: 1 - Preliminary numbers. Collected from through December 31, 2006

Sources:
Columns A, B, C, & D: CA-SIR-51, HELCO-WP-1409 (C) UPDATED, columns A, B, E, & I

Hawaii Electric Light Company, Inc.

Test Year 2006

SUMMARY OF BLANKET PROJECTS
CONTRIBUTIONS IN AID OF CONSTRUCTION
($ THOUSANDS)

	A	B	C	D
Line	Project/ Budget Item	Description	Original Estimated Contributions	Amount Collected in 2006[1]
1	H1008000	Minor OH Extn Below $20000	$ 30.7	$ 97.4
2	H1003000	Minor UG Services	340.1	600.2
3	H1017000	Minor UG Extn Below $20000	530.3	796.5
		Total	$ 901.1	$ 1,494.1

Notes: 1 - Preliminary numbers. Collected from through December 31, 2006

Sources:
Columns A, B, C, & D: CA-IR-447, HELCO-WP-1409 (C) UPDATED, columns A, B, E, I & K

Hawaii Electric Light Company, Inc.
ESTIMATED CIAC AND ADVANCES
INCLUDING ACTUAL AMOUNTS COLLECTED

A	B	C	D	E	F	G	H	I	J	K
O1 Plant										
								AMT COLLECTED IN 2006[1]		
COMP NO	COMPONENT TITLE	DESGR	BUDGET	AIDS	ADVS	TOTALS	UPDATED BUDGET	AIDS	ADVS	COMMENTS
H0007000	Customer Request Projects	MB	624.8	18.7	599.8	618.6	-	-	-	
H1008000	Minor OH Extn Below $20000	MB	1,533.0	30.7	398.6	429.2	3,397.0	97.4	1,164.3	
H3521000	SSPP Requests	MB	550.9	-	165.3	165.3	0.5	-	-	
H0001421	Neil Vieth	RY	29.0		19.0	19.0	34.6		17.2	
H0001422	Virn Patton	GI	44.0		15.5	15.5	53.8		16.4	
H0001430	Glenwood Farm Lots	AM	155.3		155.3	155.3	155.0		155.3	
H0001431	Joseph Magaldi	GI	35.4		16.5	16.5	41.7		17.5	
H0001432	Vivian Whitney	BM	49.0		32.2	32.2	44.5		17.3	
H0001434	Peter Aickin	RY	26.0		16.7	16.7	28.7		16.7	
H0001435	Kikala Keokea S/D	EY	330.4	327.8	306.1	633.9	283.5			
H0001436	Halelli S/D	RY	44.0	1.1	42.4	43.5	71.0			AID & ADV-rcvd 2005
H0001203	Apollo Kamaoa Substation	LR	125.0	125.0	-	125.0	355.5			
	Apollo 69KV Line Drops	EY	82.0	82.0	-	82.0	82.0			
H0001204	Apollo Kamaoa to PT MW	LR	233.7	233.7	-	233.7	169.8			
H0001205	Apollo SCADA at Kamaoa	LR	62.5	62.5	-	62.5	20.9			
H0001207	Apollo Kilauea Relay Upgrade	LR	42.3	42.3	-	42.3	77.4			
H0001208	Apollo Kealia Relay Upgrade	LR	42.3	42.3	-	42.3	90.9			
SSPP Units										
H0001429	SSPP 894 - Randall	RY	12.0		10.2	10.2	21.8		6.8	
H0001428	SSPP 833 - Caldwell	RY	33.0		34.2	34.2	51.4		15.2	
H0001426	SSPP 866 - Pua Mauka Dev	RY	27.0		27.0	27.0	30.0		18.0	
H0001427	SSPP 895 - Wolske	RY	10.0		15.6	15.6	13.4		7.9	
H0001423	SSPP 809 - Desouza	RY	20.0		34.5	34.5	24.9		23.0	
H0001424	SSPP 848 - Atkinson	RY	15.0		19.1	19.1	21.2		9.9	
H0001425	SSPP 868 - Berkich	RY	20.0		20.4	20.4	27.0		6.8	
H0001437	SSPP 857 - Alderdyce	GI	15.3		9.6	9.6	25.5		9.7	
Total O1 Plant			4,161.9	966.1	1,938.0	2,904.1	5,122.3	97.4	1,502.1	
U1,U3,U5,U9 Plant										
								AMT COLLECTED IN 2006[1]		
COMP NO	COMPONENT TITLE	DESGR	BUDGET	AIDS	ADVS	TOTALS	UPDATED BUDGET	AIDS	ADVS	COMMENTS
H0011000	Unforseeable UG Cust Request	KW	1,228.7	638.9	589.8	1,228.7	-	-	-	
H1003000	Minor UG Services	KW	1,172.7	340.1	304.9	645.0	1,484.1	600.2	17.5	
H1017000	Minor UG Extn Below $20000	KW	1,128.4	530.3	146.7	677.0	1,249.4	796.5	1,770.6	
H0001417	Hanaula Subd	MM	59.0		59.0	59.0	62.0		69.2	
H0001418	Kikaha @ Wehilani	MM	503.0	389.8	141.9	531.7	484.5	108.5	172.4	
H0001420	Sunset Ridge PH. 3 Unit 3	MM	51.0		50.5	50.5	157.6		50.5	
H0001329	Waikoloa Beach Marriott	RR	35.5	80.3		80.3	59.9			AID-rcvd 2005
H0001419	Parker Well #1	MM	30.0	29.7		29.7	74.1	29.8		
Total U1,U5,U9 Plant			4,208.3	2,009.1	1,292.8	3,301.9	3,571.6	1,535.0	2,080.3	

Hawaii Electric Light Company, Inc.
ESTIMATED CIAC AND ADVANCES
INCLUDING ACTUAL AMOUNTS COLLECTED

A	B	C	D	E	F	G	H	I	J	K
NEW PROJECTS[1]										
ST Plant										
							UPDATED	AMT COLLECTED IN 2006[1]		
COMP NO	COMPONENT TITLE	DESGR	BUDGET	AIDS	ADVS	TOTALS	BUDGET	AIDS	ADVS	COMMENTS
H0000442	Palani Substation	HK	1,330.0		1,259.5	1,259.5	1,676.2		109.0	ADV-$67,192 rcvd 2000
H0000443	Palani 69KV Drop	HK	138.0		149.0	149.0	139.9		9.1	ADV-$5,608 rcvd 2000
H0000444	Palani 12KV UG	HK	121.0		80.0	80.0	121.7	7.9		
H0001368	Kaloko Unit #2 Transf	HK	817.0		452.4	452.4	812.0	48.4	362.0	AID-$12,098 & ADV-$90,498 rcvd 2005
Total ST Plant			2,406.0	-	1,940.9	1,940.9	2,749.7	56.3	480.0	
O1 Plant										
							UPDATED	AMT COLLECTED IN 2006[1]		
COMP NO	COMPONENT TITLE	DESGR	BUDGET	AIDS	ADVS	TOTALS	BUDGET	AIDS	ADVS	COMMENTS
H0001439	Harris, Anthony & Fronda	BM	23.0		6.1	6.1	28.1		6.1	
H0001451	Puaono S/D - Incr II	DN	29.7		20.2	20.2	38.2		0.9	ADV-$19,367 rcvd 2004
H0001469	Deluz, Frank Jr	DN	44.2		12.9	12.9	45.9			ADV-rcvd 2005
H0001478	St. Ambrogio, Roberta	DN	29.0		4.6	4.6	31.1		4.6	
H0001480	David & Doris Greer	DN	35.6		11.5	11.5	34.0		11.5	
H0001483	Deborah & Richard Ryken	DN	95.7		35.9	35.9	92.7		3.6	ADV-$32,347 rcvd 2005
H0001485	Orchards at Pepeekeo Ph 2	BM	86.8		76.8	76.8	94.6		76.9	
H0001486	Brenda Deluz-Campbell	DN	35.0		6.3	6.3	39.0		6.3	
H0001504	Mitsuda, Jon & Melissa	DN	33.8		6.6	6.6	30.6		6.7	
H0001512	Charlie Erck	DN	30.9		6.4	6.4	37.0		6.4	
H0001513	Tim DeLozier	DN	45.3		23.5	23.5	60.0		23.5	
H0001519	Kahakai Place PUD	RY	40.0		40.9	40.9	40.0		40.6	
H0001522	Puakea Ranch Subdivision	RV	163.0		43.5	43.5	138.2		43.5	
H0001516	Dilworth, Gregory L.	DN	27.4		5.7	5.7	34.7		5.8	
H0001517	Karl Nobriga	EY	33.8	5.4		5.4	33.8		5.5	
H0001518	Island Ohana Dental	BM	60.0	14.8		14.8	53.4	14.9		
H0001523	King S/D	RV	44.0		46.1	46.1	42.8			
H0001536	Ranch @ Puakea OH	MM	54.0		53.3	53.3	50.2		53.4	
H0000725	Queen K-Kaiwi-Palani 69KV	KW	1,702.0	468.9		468.9	1,702.0			
H0001463	Kealakaha Bridge Replacement	EY	218.5	135.1		135.1	218.5			
SSPP Units										
H0001441	SSPP Unit 905-Pied	RY	10.0		13.7	13.7	16.8		9.2	
H0001447	SSPP Unit 890 Warren	BM	67.2		35.2	35.2	76.0		21.5	
H0001448	SSPP Unit 808 - Dang	RY	40.0		59.7	59.7	55.6		24.9	
H0001449	SSPP Unit 884 - Scarborough	CN	34.3		18.2	18.2	30.0		9.1	
H0001464	SSPP Unit 865 - Denson	RY	17.0		19.4	19.4	20.3		10.8	
H0001465	SSPP Unit 871 - Jeanneault	RY	21.0		23.6	23.6	15.5		11.8	
H0001466	SSPP Unit 903 - Boyles	AM	30.7		20.0	20.0	28.0		16.0	
H0001476	SSPP Unit 835 - Ortega	RY	25.0		8.9	8.9	8.6		18.0	
H0001481	SSPP Unit 900 - Dickerson	RY	30.0		18.1	18.1	31.1		12.1	
H0001488	SSPP Unit 908 - Derkovich	RY	31.0		29.7	29.7	31.0		19.9	
H0001489	SSPP Unit 922 - Elmore	RY	16.0		14.2	14.2	11.4		8.9	
H0001491	SSPP Unit 911 - Edelhertz	AM	35.7		20.4	20.4	35.8		15.3	
H0001492	SSPP Unit 859 - Cabral	RY	23.0		21.0	21.0	6.9		7.0	
H0001494	SSPP Unit 877 - Thacher	GI	29.7		17.5	17.5	29.8		14.0	
H0001501	SSPP Unit 904 - Steich	RY	19.7		21.9	21.9	20.3		8.4	
H0001498	SSPP Unit 897 - Sherrell	GI	21.5		7.1	7.1	21.1		7.1	
H0001510	SSPP Unit 875 - Emeliano	RY	71.0		64.7	64.7	71.0		32.4	
H0001525	SSPP Unit 906-Killiam	GI	35.8		17.8	17.8	35.9		11.9	
H0001533	SSPP Unit 917-Meredith	RY	30.0		33.3	33.3	30.0		22.3	
H0001534	SSPP Unit 936-Lawler	RY	17.0		20.1	20.1	17.0		13.4	
Total O1 Plant			3,437.3	624.2	884.8	1,509.0	3,436.9	14.9	589.5	

Hawaii Electric Light Company, Inc.
ESTIMATED CIAC AND ADVANCES
INCLUDING ACTUAL AMOUNTS COLLECTED

A	B	C	D	E	F	G	H	I	J	K
NEW PROJECTS[1]										
U1,U3,U5,U9 Plant										
							UPDATED	AMT COLLECTED IN 2006[1]		
COMP NO	COMPONENT TITLE	DESGR	BUDGET	AIDS	ADVS	TOTALS	BUDGET	AIDS	ADVS	COMMENTS
H0000725	Queen K-Kaiwi-Palani 69KV	RB	1,702.0	488.5		488.5	1,920.9			
H0001360	Kuakini Distr & Svcs	RB	654.0	565.0		565.0	683.7			
H0001438	Keahole heights Ph II S/D	RV	32.0	9.2	21.7	30.9	30.8	8.3	19.5	
H0001442	Golf Villas-LE	RB	150.0	46.0	112.2	158.2	99.6	48.0	116.9	
H0001444	Lokahi Makai S/D-Phase I	RB	228.3	200.1	176.1	376.2	399.2			AID-$41,370 & ADV-$148,501 rcvd 2004
H0001445	Lokahi Makai S/D-Phase II	RB	152.8	194.5	173.3	367.8	422.8			ADV-$173,336 rcvd 2005
H0001443	KOYO USA 3	RB	78.5	35.1		35.1	121.1	40.1		
H0001450	Hapuu Kapanaia S/D	RV	77.0		80.3	80.3	49.8		5.6	
H0001453	Kulalani at Mauna Lani	RB	126.6	50.9	87.2	138.1	79.6	51.0	87.3	
H0001455	Waikoloa Beach Villas Ph II	RV	55.0	5.5	36.7	42.2	57.5		53.0	
H0001462	Alii Cove	RB	173.8	100.9	133.3	234.2	160.4			ADV-$65,926 rcvd 2005
H0001470	Hualalai Parcel 10B & 13 S/D	KI	393.3	297.4	118.0	415.4	534.8	262.1	118.0	
H0001471	Hainoa Villas Parcel 7B	KI	46.1	31.0	21.5	52.5	68.7	31.1	21.6	
H0001473	Hualalai Parcel 16B Subdvn	KI	155.4	104.7	59.6	164.3	170.1	104.8	59.7	
H0001474	Hualalai Heights S/D	RY	84.0		95.3	95.3	61.0		86.5	
H0001475	Waiulaula at Mauna Kea	RB	210.0		216.6	216.6	256.2			ADV-$216,668 rcvd 2005
H0001477	Pualani Estates Subdn Phase 2	KI	244.6	86.0	179.4	265.4	421.6	86.1	155.3	
H0001482	Alii Heights S/D Unit 2 PH 4	KI	36.3	0.2	43.1	43.3	21.9	0.3	43.1	
H0001484	Maniniowali S/D Ph. 2	RR	388.6	219.0	249.6	468.6	388.3	219.0	164.3	
H0001487	Volcano Golf, Unit V-UG	AM	63.4		60.1	60.1	68.5		60.2	
H0001495	Makana Kai @ Wehilani	MM	141.0		179.8	179.8	95.5		96.1	
H0001496	Waimea parkside PUD	MM	52.0		51.8	51.8	51.9		51.8	
H0001500	Alii Heights Unit 2 Ph 5 S/D	KI	38.0	47.1	49.8	96.9	79.1		49.9	
H0001502	Honolii Ridge Inc. 1	AM	22.6	4.8	31.8	36.6	6.4	4.8	31.8	
H0001499	Hua'aina S/D	RY	26.0		25.7	25.7	22.7		25.8	
H0001508	Kailine Subdivision	GI	26.3		29.8	29.8	25.3		31.0	
H0001509	Koyanagi S/D	RY	24.0		26.6	26.6	24.0	0.1	26.7	
H0001520	Matsuyama Store	KI	29.3	16.1		16.1	29.3	16.1		
H0001521	Sena Subdivision	RV	45.0		47.4	47.4	42.6		42.9	
H0001524	O'oma Plantation	RV	61.0		71.0	71.0	63.4		71.0	
H0001514	Sugarcane Lane S/D	RY	28.0		28.1	28.1	28.0		28.1	
H0001515	Feeney S/D	RY	31.0	14.5	20.6	35.1	31.0	15.2	20.7	
H0001535	Uplands at Kaohe S/D	RY	49.0		51.9	51.9	49.0		46.8	
H0001537	Ranch @ Puakea UG	MM	64.0		64.0	64.0	58.8			
H0001540	Waikoloa Park Comfort Station	DD	83.0	27.3		27.3	83.0	25.6	1.8	
H0001541	Kona Vista S/D Unit II	KI	274.0	122.6	172.4	295.1	274.0	122.6	172.4	
H0001544	Enzamin	MM	36.0	11.5		11.5	36.0			AID-$11,526 rcvd 2004
H0001545	Mauna Lani Site K	MM	43.0	21.5	55.4	76.9	43.0			AID-$21,533 & ADV-$55,449 rcvd 2004
H0001546	Lokahi Makai Phase 3A-UG	KW	163.0	106.4	29.1	135.5	163.0			
H0001547	Lokahi Makai Phase 3B-UG	KW	28.0		27.5	27.5	28.0			
H0001548	Lokahi Makai Phase 4-UG	KW	83.0	9.7	73.3	83.0	83.0	9.7	73.3	
							-			
Total U1,U5,U9 Plant			6,400.9	2,815.5	2,900.0	5,715.5	7,333.7	1,044.7	1,761.1	
GRAND TOTAL			**20,614.4**	**6,414.9**	**8,956.5**	**15,371.4**	**22,214.3**	**2,748.3**	**6,413.0**	

NOTE: 1 - Funding for new projects were transferred from H0007000 (Customer Request Projects), H3521000 (SSPP Requests), or H0011000 (Unforeseeable UG Cust Request)
2 - Preliminary numbers. Collected from through December 31, 2006

SOURCE: Accounting Records thru 12/31/06

Hawaii Electric Light Company, Inc.
CIAC IN-KIND CONTRIBUTIONS BY YEAR

Line	A	B	C	D	E	F	G
		>ACTUALS<		FORECAST	UPDATED FORECAST[3]	2006 ACTUALS[4]	NOTES
1	2001	$ 326,084.63					
2	2002	$ 171,874.71					
3	2003	$ 227,491.18					1
4	2004	$ -					2
5	2005	$ 392,073.31					
6	2006			$ 190,791.00	$ 1,495,948.10	$ 1,470,630.10	

	2006 forecast	Project
	$ 11,593.00	H0000725
	$ 179,198.00	H0011000
	$ 190,791.00	
Rounding	$ 190,800	

Updated 2006 forecast	Updated 2006 actuals	Project
$ 24,956.00	$ -	H0000725 - Queen K-Kaiwi-Palani 69KV
$ 128,495.07	$ 128,495.07	H0001420 - Sunset Ridge Ph. 3 Unit 3
$ 236,124.98	$ 236,124.98	H0001444 - Lokahi Makai - Phase 1
$ 216,058.40	$ 216,058.40	H0001445 - Lokahi Makai - Phase 2
$ 47,194.18	$ 47,194.18	H0001500 - Alii Heights Unit 2 Phase 5
$ 240,000.00	$ 239,638.00	H0001360 - Kuakini Distr & Svcs
$ 50,374.62	$ 50,374.62	H0001482 - Alii Heights S/D Unit 2 Phase 4
$ 295,564.67	$ 295,564.67	H0001477 - Pualani Estates Subdivision Phase 2
$ 257,180.18	$ 257,180.18	H0001418 - Kikaha @ Wehilani
$ 1,495,948.10	$ 1,470,630.10	

Notes:

1 In 2003, $51,346.03 was the effect of revised information regarding 2000-2003 contributions.
2 In 2004, there were no in-kind contributions recorded.
3 Information provided in CA-447. Includes $1,230,992.10 of actuals as of 11/27/06
4 Includes actuals as of 12/31/06

Source: Engineering Department Records

Hawaii Electric Light Company, Inc.

Test Year 2006

SUMMARY OF SPECIFIC PROJECTS
CUSTOMER ADVANCES
($ THOUSANDS)

	A	B	C	D
Line	Project/ Budget Item	Description	Original Estimated Contributions	Amount Collected in 2006[1]
1	H0007000	Customer Request Projects	599.8	0.0
2	H3521000	SSPP Requests	165.3	0.0
3	H0011000	Unforseeable UG Cust Request	589.8	0.0
4	H0001421	Neil Vieth	19.0	17.2
5	H0001422	Virn Patton	15.5	16.4
6	H0001430	Glenwood Farm Lots	155.3	155.3
7	H0001431	Joseph Magaldi	16.5	17.5
8	H0001432	Vivian Whitney	32.2	17.3
9	H0001434	Peter Aickin	16.7	16.7
10	H0001435	Kikala Keokea S/D	306.1	
11	H0001436	Haleili S/D	42.4	
12	H0001429	SSPP 894 - Randall	10.2	6.8
13	H0001428	SSPP 833 - Caldwell	34.2	15.2
14	H0001426	SSPP 866 - Pua Mauka Dev	27.0	18.0
15	H0001427	SSPP 895 - Wolske	15.6	7.9
16	H0001423	SSPP 809 - Desouza	34.5	23.0
17	H0001424	SSPP 848 - Atkinson	19.1	9.9
18	H0001425	SSPP 868 - Berkich	20.4	6.8
19	H0001437	SSPP 857 - Alderdyce	9.6	9.7
20	H0001418	Kikaha @ Wehilani	141.9	172.4
21	H0001417	Hanaula Subd	59	69.2
22	H0001420	Sunset Ridge PH. 3 Unit 3	50.5	50.5
		Total	$ 2,380.6	$ 629.9
NEW PROJECTS				
23	H0000442	Palani Substation		109.0
24	H0000443	Palani 69KV Drop		9.1
25	H0000444	Palani 12KV UG		
26	H0001368	Kaloko Unit #2 Transf		362.0

Hawaii Electric Light Company, Inc.

Test Year 2006

SUMMARY OF SPECIFIC PROJECTS
CUSTOMER ADVANCES
($ THOUSANDS)

	A	B	C	D
Line	Project/ Budget Item	Description	Original Estimated Contributions	Amount Collected in 2006[1]
27	H0001439	Harris, Anthony & Fronda		6.1
28	H0001451	Puaono S/D - Incr II		0.9
29	H0001469	Deluz, Frank Jr		
30	H0001478	St. Ambrogio, Roberta		4.6
31	H0001480	David & Doris Greer		11.5
32	H0001483	Deborah & Richard Ryken		3.6
33	H0001485	Orchards at Pepeekeo Ph 2		76.9
34	H0001486	Brenda Deluz-Campbell		6.3
35	H0001504	Mitsuda, Jon & Melissa		6.7
36	H0001512	Charlie Erck		6.4
37	H0001513	Tim DeLozier		23.5
38	H0001519	Kahakai Place PUD		40.6
39	H0001522	Puakea Ranch Subdivision		43.5
40	H0001516	Dilworth, Gregory L.		5.8
41	H0001517	Karl Nobriga		5.5
42	H0001523	King S/D		
43	H0001536	Ranch @ Puakea OH		53.4
44	H0001441	SSPP Unit 905-Pied		9.2
45	H0001447	SSPP Unit 890 Warren		21.5
46	H0001448	SSPP Unit 808 - Dang		24.9
47	H0001449	SSPP Unit 884 - Scarborough		9.1
48	H0001464	SSPP Unit 865 - Denson		10.8
49	H0001465	SSPP Unit 871 - Jeanneault		11.8
50	H0001466	SSPP Unit 903 - Boyles		16.0
51	H0001476	SSPP Unit 835 - Ortega		18.0
52	H0001481	SSPP Unit 900 - Dickerson		12.1
53	H0001488	SSPP Unit 908 - Derkovich		19.9
54	H0001489	SSPP Unit 922 - Elmore		8.9
55	H0001491	SSPP Unit 911 - Edelhertz		15.3
56	H0001492	SSPP Unit 859 - Cabral		7.0

Hawaii Electric Light Company, Inc.

Test Year 2006

SUMMARY OF SPECIFIC PROJECTS
CUSTOMER ADVANCES
($ THOUSANDS)

	A	B	C	D
Line	Project/ Budget Item	Description	Original Estimated Contributions	Amount Collected in 2006[1]
57	H0001494	SSPP Unit 877 - Thacher		14.0
58	H0001501	SSPP Unit 904 - Steich		8.4
59	H0001498	SSPP Unit 897 - Sherrell		7.1
60	H0001510	SSPP Unit 875 - Emeliano		32.4
61	H0001525	SSPP Unit 906-Killiam		11.9
62	H0001533	SSPP Unit 917-Meredith		22.3
63	H0001534	SSPP Unit 936-Lawler		13.4
64	H0001438	Keahole heights Ph II S/D		19.5
65	H0001442	Golf Villas-LE		116.9
66	H0001444	Lokahi Makai S/D-Phase I		
67	H0001445	Lokahi Makai S/D-Phase II		
68	H0001450	Hapuu Kapanaia S/D		5.6
69	H0001453	Kulalani at Mauna Lani		87.3
70	H0001455	Waikoloa Beach Villas Ph II		53.0
71	H0001462	Alii Cove		
72	H0001470	Hualalai Parcel 10B & 13 S/D		118.0
73	H0001471	Hainoa Villas Parcel 7B		21.6
74	H0001473	Hualalai Parcel 16B Subdvn		59.7
75	H0001474	Hualalai Heights S/D		86.5
76	H0001475	Waiulaula at Mauna Kea		
77	H0001477	Pualani Estates Subdn Phase 2		155.3
78	H0001482	Alii Heights S/D Unit 2 PH 4		43.1
79	H0001484	Maniniowali S/D Ph. 2		164.3
80	H0001487	Volcano Golf, Unit V-UG		60.2
81	H0001495	Makana Kai @ Wehilani		96.1
82	H0001496	Waimea parkside PUD		51.8
83	H0001500	Alii Heights Unit 2 Ph 5 S/D		49.9
84	H0001502	Honolii Ridge Inc. 1		31.8
85	H0001499	Hua'aina S/D		25.8
86	H0001508	Kailine Subdivision		31.0

Hawaii Electric Light Company, Inc.

Test Year 2006

SUMMARY OF SPECIFIC PROJECTS
CUSTOMER ADVANCES
($ THOUSANDS)

	A	B	C	D
Line	Project/ Budget Item	Description	Original Estimated Contributions	Amount Collected in 2006[1]
87	H0001509	Koyanagi S/D		26.7
88	H0001521	Sena Subdivision		42.9
89	H0001524	O'oma Plantation		71.0
90	H0001514	Sugarcane Lane S/D		28.1
91	H0001515	Feeney S/D		20.7
92	H0001535	Uplands at Kaohe S/D		46.8
93	H0001537	Ranch @ Puakea UG		
94	H0001540	Waikoloa Park Comfort Station		1.8
95	H0001541	Kona Vista S/D Unit II		172.4
96	H0001545	Mauna Lani Site K		
97	H0001546	Lokahi Makai Phase 3A-UG		
98	H0001547	Lokahi Makai Phase 3B-UG		
99	H0001548	Lokahi Makai Phase 4-UG		73.3
		Total	$ -	$ 2,830.7
		Grand Total	$ 2,380.6	$ 3,460.6

Notes: 1 - Preliminary numbers. Collected from through December 31, 2006

Sources:
Columns A, B, C, & D CA-SIR-51, HELCO-WP-1409 (C) UPDATED, columns A, B, F, & J

Hawaii Electric Light Company, Inc.

Test Year 2006

SUMMARY OF BLANKET PROJECTS
CUSTOMER ADVANCES
($ THOUSANDS)

	A	B	C	D
Line	Project/ Budget Item	Description	Original Estimated Contributions	Amount Collected in 2006[1]
1	H1008000	Minor OH Extn Below $20000	$ 398.6	$ 1,164.3
2	H1003000	Minor UG Services	304.9	17.5
3	H1017000	Minor UG Extn Below $20000	146.7	1770.6
		Total	$ 850.2	$ 2,952.4

Notes: 1 - Preliminary numbers. Collected from through December 31, 2006

Sources:
Columns A, B, C, & D CA-SIR-51, HELCO-WP-1409 (C) UPDATED, columns A, B, F, & J

CA-SIR-52

Ref: HELCO-1501 & Response to CA-IR-290 (Keahole Common Facilities).

The response to part (c) of CA-IR-290 indicated that the review of the adequacy of current water treatment system capacity had begun and was expected to continue for the next six months. Please provide the following:

a. Please describe the current status of this review.

b. Has HELCO or Black & Veatch made any determination as to whether the existing water treatment system will, in fact, be adequate to support ST-7 (including SCR)? Please explain.

HELCO Response:

a. HELCO and its consultant are still in the process of gathering data and reviewing the requirements for ST-7. Currently, a preliminary water balance shows that the additional average demineralized water requirement for ST-7 will be 8.7 gpm for steam cycle makeup and NOx control additive (ammonia) production from urea. When combined with the other demineralized water needs at the site, the existing two train demineralized water treatment system needs to produce at least 78.2 gpm of demineralized product water with all generating units at 100 percent load. However, the current system is currently producing about 74 gpm of product water, which is lower than its design rated output of 80 gpm (40 gpm for each treatment train). Efforts are underway by HELCO to determine why the installed system has not met its rated output.

b. HELCO has not made a final decision on whether the existing demineralized water treatment system is adequate for ST-7. However, it appears that the current capacity of the demineralized water treatment system does not produce the quantity of water required to support ST-7, with all generating units at 100 percent load. In addition, HELCO is also reviewing whether the redundancy of the existing demineralized water treatment system

provides an adequate level of reliability or whether another water treatment train should be installed as a backup, which would also increase the total capacity of the system.

CA-SIR-53

Ref: HELCO-1501 & Response to CA-IR-500 (Keahole Siting).

In response to part (d) of CA-IR-500, HELCO indicated that it did not pursue reclassification and rezoning of the Keahole site as part of its original proposal to install CT-4/CT-5 at Keahole, because the time estimated to complete the rezoning was thought to be too lengthy to have the generating capacity installed when it was needed. Please provide the following:

a. At the time of its original proposal to install CT-4/CT-5 at Keahole, how long did HELCO believe that it would take to complete the rezoning process? Please explain.

b. How long did it actually take HELCO to complete the rezoning process? Please explain.

HELCO Response:

a. In 1992, HELCO estimated that reclassification and rezoning of the Keahole site would have taken more than 3 years and delayed the project beyond 1995 when generating capacity was required. Reclassification of the Keahole site from the State of Hawaii Conservation District to the Urban District required an accepted EIS and approval by the State Land Use Commission. After reclassification was obtained, the change in the Hawaii County zoning from Open ("O") to General Industrial ("MG") required approval by the County Council and Mayor after review by the County Planning Department and Planning Commission. HELCO estimated at the time that each of these discretionary approval processes would take years and at least one to two years for the reclassification and anywhere up to five years or more for the rezoning process. See letter dated December 8, 1993 from Warren Lee to Keith Ahue, Chairperson, DLNR, which is included in the Revised Final EIS for the Keahole Generating Station Expansion, dated December 1993 and accepted on January 7, 1994 by DLNR; Prefiled Direct Testimony of Albert L. Lyman, filed November 17, 1995 in CDUA No. HA-487A (pages 25-27).

b. The actual length of time for HELCO to complete the reclassification and rezoning of the Keahole property was about 29 months, shorter than initially estimated in 1992-1993, probably due in large part to the Settlement Agreement HELCO signed on November 6, 2003. The Settlement Agreement with the project opponents (other than Waimana) required that the parties support HELCO's petitions to reclassify and rezone the Keahole site. Without such an agreement in place in the early 1990s, HELCO's efforts to reclassify and rezone the Keahole property at that time would likely have resulted in active opposition, intervention, costly and possibly lengthy contested cases or their equivalent and taken longer than the 29 months described below.

On November 25, 2003, HELCO filed a Petition for Land Use District Boundary Amendment with the State of Hawaii Land Use Commission ("LUC"). On February 9, 2004, the LUC issued an Order requiring HELCO to prepare an environmental impact statement. The final EIS was submitted to the LUC on January 24, 2005 and was accepted on February 10, 2005. Findings of Fact, Conclusions of Law and Decision and Order were issued on May 24, 2005. Evidentiary hearings on the substance of the petition began on May 18, 2005 and concluded on July 13 and 14, 2005. A stipulated Findings of Fact, Conclusions of Law and Decision and Order ("Stipulated D&O") between HELCO, the State Office of Planning and the County of Hawaii was submitted on August 4, 2005. A proposed D&O was issued by a commissioner on September 16, 2005 ("Proposed D&O"). At the LUC hearing on September 29, 2005, the LUC voted to approve HELCO's petition for reclassification from Conservation to Urban District, with the "final" D&O consisting of the Proposed D&O with HELCO's comments and other ministerial comments from various commissioners incorporated. The "final" document was accepted by the LUC at its meeting

on October 19, 2005 subject to a few ministerial revisions. The signed D&O was issued on November 7, 2005.

HELCO filed a rezoning application with the County of Hawaii Planning Department on November 10, 2005. The Planning Director provided a recommendation with conditions to the Planning Commission, and a public hearing was subsequently held on January 20, 2006, at which time the Commission unanimously approved the recommendation and conditions. On February 3, 2006, the recommendation was forwarded by the Planning Commission to the Hawaii County Council for introduction as a bill. At a hearing before the Planning Committee of the County Council on March 21, 2006, the Planning Committee unanimously voted to pass the bill to the full County Council for first reading. In its first reading on April 5, 2006, the Hawaii County Council voted to pass the rezoning bill to second reading, and on April 19, 2006, the Hawaii County Council subsequently voted to approve and forward the rezoning bill to the Mayor of Hawaii. On May 2, 2006, Mayor Kim signed Bill No. 223/Ordinance 06 50, thereby completing the rezoning process. Accordingly, Section 25-8-3, Article 8, Chapter 25 (Zoning Code) of the Hawaii County Code 1983 (2005 Edition), has now been amended to change the district classification of the Keahole Generating Station and Airport Substation sites to "General Industrial" (MG).

CA-SIR-54

Ref: HELCO-1501, page 67, revised HELCO-1503, & Responses to CA-IR-506 & CA-IR-447 (Keahole Landscaping).

The response to CA-IR-506 indicates that no specific amount was identified for landscaping in the original CT-4/CT-5 project cost, but that $210,000 was spent in 1998 for planting pine trees, coconut palms, wiliwili trees, oleander and areaca palms. In response to part (d) of CA-IR-506, the Company indicated that HELCO installed additional landscaping at Keahole pursuant to a cited Settlement Agreement. Revised HELCO-1503 (see page 14 of HELCO T-15 response to CA-IR-447), indicates that $1,116,425 was spent on landscaping through October 31, 2006. Please provide the following:

a. In negotiating the settlement agreement, did HELCO discuss or attempt to negotiate a fixed amount or cap on the cost of any landscaping to be installed? Please explain.

   1. If the response to part (a) above indicates that the Company did not attempt to negotiate a landscaping cost cap, please explain why HELCO did not attempt to limit the level of landscaping expenditures.

   2. If the response to part (a) above indicates that the Company did attempt to negotiate a landscaping cost cap, please explain how such negotiations progressed as well as the dollar amounts proposed by HELCO and agreed to by the parties.

b. Has HELCO committed to funding any additional landscaping at or near Keahole as part of the construction and installation of ST-7? Please explain and provide the estimated cost of any additional landscaping.

c. Please provide a monthly breakdown of the $1,116,425 of landscaping expenditures, if available.

HELCO Response:

a. HELCO did not attempt to negotiate a fixed amount or cap on the cost for landscaping during the Settlement Agreement negotiations. HELCO estimated that its cost for the incremental landscaping as requested by the other parties would be about $750,000, subject to final construction bids, based on discussions with its landscape architect who had previously worked with the Kona Outdoor Circle, one of the parties with whom the Settlement Agreement required HELCO to collaborate and consult in developing the

landscaping plan. HELCO's actual costs for the incremental landscaping were $903,403, which is consistent with the range of HELCO's original estimate. The actual costs reflected the high cost construction market conditions and costs of plants in the Kona area at the time.

1. See response to subpart a above.
2. Not applicable.

b. HELCO has not committed to install additional landscaping as part of the installation for ST-7.

c. See Attachment 1 to this response. Please note that the landscaping cost category included $189,845 in costs for a security fence. The landscaping cost category also included $23,176 for work that was mis-categorized under landscaping, but was for relocating the CT-2 black start diesel engine, which was required to comply with the CT-4 and CT-5 air permit.

Incremental Keahole CT-4 and CT-5
Landscaping Costs

Month	PR012596 CT-4	PR012685 CT-4	PR012663 CT-4	PR012597 CT-5	PR012684 CT-5	PR012664 CT-5	Total
Apr-05	89,495.84			89,495.84			178,991.68
May-05	71,350.00	5,050.00	5,944.44	71,350.00	5,050.00	5,944.44	164,688.88
Jun-05	161,053.75		7,540.81	161,053.75		7,540.82	337,189.13
Jul-05			8,094.76			8,094.77	16,189.53
Aug-05			8,047.30			8,047.30	16,094.60
Sep-05	55,623.94		6,447.49	55,623.94		6,447.48	124,142.85
Oct-05			5,066.88			5,066.88	10,133.76
Nov-05			4,560.05			4,560.05	9,120.10
Dec-05	23,426.50			23,426.50			46,853.00
SUBTOTAL	400,950.03	5,050.00	45,701.73	400,950.03	5,050.00	45,701.74	903,403.53
	Security Gate						189,845.00
	Black Start						23,176.47
TOTAL							1,116,425.00

CA-SIR-54
DOCKET NO. 05-0315
ATTACHMENT 1
PAGE 1 OF 1

CA-SIR-55

Ref: Revised HELCO-1503 & Responses to CA-IR-501 & CA-IR-447 (Keahole Landscaping).

HELCO's response to part (f) of CA-IR-501 discusses various measures taken by the Company to address noise mitigation. Revised HELCO-1503 (see page 14 of HELCO T-15 response to CA-IR-447), indicates that $10,045,259 was spent on noise abatement through 10/31/06. Please provide the following:

a. Please provide a monthly breakdown of the $10,045,259 of noise abatement expenditures, if available.

b. Referring to the actions taken by HELCO to mitigate noise impacts, please provide a breakdown of the $10,045,259 (or HELCO's best cost estimate) between the following categories, if available:

   1. Noise mitigation costs directly attributable to CT-2, CT-4 or CT-5 (e.g., replacing CT-2 lube oil cooler; changing CT-4/CT-5 lube oil cooler fans; retrofitting CT-4/CT-5 exhaust plenum outlets, etc.). [Note: this request only seeks aggregate costs for this category, not by item.]

   2. Noise mitigation costs incurred at the Keahole site, but not specifically related to specific generating units.

   3. Noise mitigation costs that are directly related to ST-7, even though ST-7 has not yet been completed.

c. Please provide HELCO's best estimate of the additional Keahole noise mitigation costs that will be incurred as part of the construction and installation of ST-7.

HELCO Response:

a. Please see Attachment No. 1 to this CA-SIR response.

b.

   1. Please also see Attachment No. 1. Note that only noise mitigation costs associated with CT-4 and CT-5 are included in the $10,040,259 noise abatement amount shown in the revised HELCO-1503. Even though the response to CA-IR-501 f. discusses noise mitigation measures that were taken for other units such as for CT-2, only costs

associated with the installation of CT-4 and CT-5 are included in the $10,040,259 amount.

The cost associated with noise mitigation for CT-2 was $3,036,195 as provided in the Final Cost Report for the CT-2 Noise Mitigation project filed on February 3, 2006 with the Commission under Docket No. 04-0352.

2. A cost breakdown by the example categories specified is not available. See response in subpart 1 above for the total cost by the unit. Only noise mitigation costs for CT-4 and CT-5 are included in the $10,040,259.

3. No noise mitigation costs related to equipment to be installed for ST-7 are included in the $10,040,259.

c. HELCO's current noise mitigation estimate for ST-7 is $7.5 million to install noise walls and noise enclosures to mitigation the noise from ST-7. The design of the noise mitigation requirements for ST-7 will evolve as the noise characteristics from the equipment purchased for ST-7 are determined.

Hawaii Electric Light Company
Keahole CT-4 & CT-5 Noise Mitigation Costs

Month	Vendor	G0007693 CT-4	G0007550 CT-4	G0007694 CT-5	Total
Jul-02	Quest Technologies		566.59		566.59
Sep-02	United Steel Structure - Use Tax	7,212.41		7,212.41	14,424.82
Sep-02	United Steel Structure	180,310.15		180,310.15	360,620.30
Sep-02	United Steel Structure - Use Tax	11,286.64		11,286.64	22,573.28
Sep-02	United Steel Structure	282,165.90		282,165.90	564,331.80
Oct-02	United Steel Structure - Use Tax	9,664.60		9,664.60	19,329.20
Oct-02	United Steel Structure	241,614.90		241,614.90	483,229.80
Dec-02	United Steel Structure	121,490.81		121,490.80	242,981.61
Jan-03	United Steel Structure - Use Tax	4,859.63		4,859.63	9,719.26
Apr-03	United Steel Structure	900.00		900.00	1,800.00
Apr-03	United Steel Structure - Use Tax	36.00		36.00	72.00
Nov-03	United Steel Structure	1,800.00		1,800.00	3,600.00
Nov-03	United Steel Structure - Use Tax	72.00		72.00	144.00
Mar-04	United Steel Structure	1,500.00		1,500.00	3,000.00
Mar-04	United Steel Structure - Use Tax	60.00		60.00	120.00
May-04	United Steel Structure	146,586.45		146,586.45	293,172.90
May-04	United Steel Structure - Use Tax	5,863.46		5,863.46	11,726.92
May-04	United Steel Structure	333,882.90		333,882.90	667,765.80
May-04	United Steel Structure - Use Tax	13,355.32		13,355.32	26,710.64
Jun-04	Rockbestos - Surprenaut		11,169.13		11,169.13
Jul-04	*United Steel Structure*	*89,403.45*		*89,403.44*	*178,806.89*
Jul-04	United Steel Structure - Use Tax	3,576.14		3,576.14	7,152.28
Jul-04	United Steel Structure	191,048.85		191,048.85	382,097.70
Jul-04	United Steel Structure - Use Tax	7,641.95		7,641.95	15,283.90
Jul-04	Hawaii Nut & Bolt	96.52		96.52	193.04
Aug-04	Siemens Industrial Services		21,794.18		21,794.18
Aug-04	United Steel Structure	129,237.15		129,237.16	258,474.31
Aug-04	United Steel Structure - Use Tax	5,169.49		5,169.49	10,338.98
Aug-04	United Steel Structure	2,928.11		2,928.11	5,856.22
Aug-04	United Steel Structure - Use Tax	117.12		117.12	234.24
Sep-04	United Steel Structure	73,189.20		73,189.20	146,378.40
Sep-04	United Steel Structure - Use Tax	2,927.57		2,927.57	5,855.14
Sep-04	United Steel Structure	128,860.00		128,860.00	257,720.00
Sep-04	United Steel Structure - Use Tax	5,154.40		5,154.40	10,308.80
Sep-04	Mutual Welding Company	19,560.00		19,560.00	39,120.00
Sep-04	Siemens Industrial Services		4,687.20		4,687.20
Oct-04	Rockbestos - Surprenaut	533.44		533.43	1,066.87

CA-SIR-55
DOCKET NO. 05-0315
ATTACHMENT 1
PAGE 1 OF 3

Hawaii Electric Light Company
Keahole CT-4 & CT-5 Noise Mitigation Costs

Month	Vendor	G0007693 CT-4	G0007550 CT-4	G0007694 CT-5	Total
Oct-04	Siemens Industrial Services	8,863.21		8,863.19	17,726.40
Nov-04	United Steel Structure	45,875.95		45,875.95	91,751.90
Nov-04	United Steel Structure - Use Tax	1,835.04		1,835.04	3,670.08
Nov-04	United Steel Structure	59,000.80		59,000.80	118,001.60
Nov-04	United Steel Structure - Use Tax	2,360.03		2,360.03	4,720.06
Dec-04	Isemoto Contracting	221,265.45		221,265.45	442,530.90
Dec-04	Isemoto Contracting	303,008.98		303,008.97	606,017.95
Dec-04	Isemoto Contracting	412,603.06		412,603.06	825,206.12
Dec-04	Isemoto Contracting	420,110.32		420,110.31	840,220.63
Dec-04	Isemoto Contracting - Year-end Accrual	543,422.54		543,422.54	1,086,845.08
Dec-04	Hawaii Fluid System Technologies			212.37	212.37
Dec-04	*Pacific Industrial Product*			123.86	123.86
Jan-05	Mutual Welding Company	1,513.00		1,513.00	3,026.00
Feb-05	Siemens Industrial Services	1,935.30		1,935.29	3,870.59
Mar-05	Isemoto Contracting	571,878.34		571,878.34	1,143,756.68
Apr-05	Donaldson & Company	1,263.20		1,263.20	2,526.40
Apr-05	Heat Tracing Specialties West	634.53		634.53	1,269.06
Apr-05	CU Services LLC	2,572.34		2,572.34	5,144.68
May-05	National Fire Protection Co.	8,691.22		8,691.22	17,382.44
May-05	CU Services LLC	2,520.00		2,520.00	5,040.00
May-05	Metal Form Manufacturing Inc.	4,328.76		4,328.76	8,657.52
Jun-05	Ferguson Enterprises	1,509.60		1,509.60	3,019.20
Jul-05	Valve Service & Supply Inc.	1,118.51		1,118.51	2,237.02
Jul-05	Isemoto Contracting	442,157.65		442,157.64	884,315.29
Jul-05	Isemoto Contracting	127,974.91		127,974.91	255,949.82
Jul-05	Isemoto Contracting	59,692.66		59,692.65	119,385.31
Jul-05	Metal Form Manufacturing Inc.	2,705.84		2,705.84	5,411.68
Jul-05	Stanford Associates	5,906.06		5,906.06	11,812.12
Jul-05	CCI Fluid Kinetics	2,555.12		2,555.12	5,110.24
Aug-05	Y Ebisu & Associates		3,897.00		3,897.00
Aug-05	King Kamehameha Hotel		82.45		82.45
Aug-05	King Kamehameha Hotel		82.45		82.45
Aug-05	National Fire Protection Co.	26,073.46		26,073.46	52,146.92
Aug-05	Isemoto Contracting - Reverse Year-end Accrual	(543,422.54)		(543,422.54)	(1,086,845.08)
Sep-05	Y Ebisu & Associates		4,061.00		4,061.00
Sep-05	King Kamehameha Hotel		82.45		82.45
Sep-05	King Kamehameha Hotel		82.45		82.45

CA-SIR-55
DOCKET NO. 05-0315
ATTACHMENT 1
PAGE 2 OF 3

Hawaii Electric Light Company
Keahole CT-4 & CT-5 Noise Mitigation Costs

Month	Vendor	G0007693 CT-4	G0007550 CT-4	G0007694 CT-5	Total
Sep-05	King Kamehameha Hotel		82.45		82.45
Sep-05	King Kamehameha Hotel		82.45		82.45
Sep-05	CCI Fluid Kinetics	8,948.09		8,948.10	17,896.19
Sep-05	Ferguson Enterprises	1,120.27		1,120.27	2,240.54
Oct-05	Aloha Machine & Welding	11,484.30			11,484.30
Nov-05	Y Ebisu & Associates		1,093.00		1,093.00
Nov-05	King Kamehameha Hotel		82.45		82.45
Nov-05	King Kamehameha Hotel		82.45		82.45
Nov-05	King Kamehameha Hotel		82.45		82.45
Nov-05	Aloha Machine & Welding	11,475.02		11,475.00	22,950.02
Nov-05	Aloha Machine & Welding	4,994.76		4,994.76	9,989.52
Nov-05	Arakaki Mechanical			19,452.60	19,452.60
Nov-05	Arakaki Mechanical			12,008.67	12,008.67
Nov-05	Arakaki Mechanical	14,954.06			14,954.06
Nov-05	Arakaki Mechanical	5,342.36			5,342.36
Nov-05	Arakaki Mechanical	3,957.44		3,957.43	7,914.87
Nov-05	Metal Form Manufacturing Inc.	3,936.79		3,936.79	7,873.58
Nov-05	Aloha Machine & Welding	44,895.55		44,895.54	89,791.09
Dec-05	Arakaki Mechanical	29,685.16			29,685.16
Dec-05	Metal Form Manufacturing Inc.	3,001.71		3,001.71	6,003.42
Dec-05	*Year-end Accrual*	*100,000.00*		*100,000.00*	200,000.00
Feb-06	Arakaki Mechanical	6,051.80			6,051.80
Apr-06	United Stell Structures Inc.	74,556.54			74,556.54
Apr-06	Reverse Year-end Accrual	(74,556.54)			(74,556.54)
Jun-06	United Steel Structures Inc.	50,000.00			50,000.00
Aug-06	Reverse Year-end Accrual	(25,443.46)		(20,398.00)	(45,841.46)
		5,036,461.75	48,010.15	4,955,786.91	10,040,258.81

CA-SIR-55
DOCKET NO. 05-0315
ATTACHMENT 1
PAGE 3 OF 3